Installation Instructions

POINT I/O ControlNet Adapter

Catalog Number 1734-ACNR

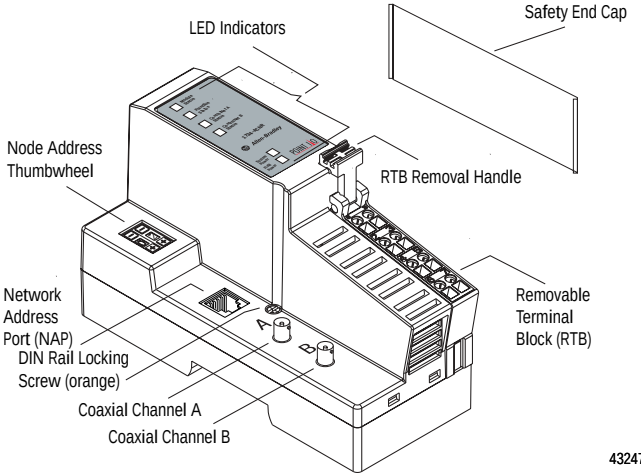

The POINT I/O ControlNet Adapter is a communications adapter for POINT I/O modules. The adapter provides an interface for controlling and communicating with POINT I/O modules from a ControlNet network.

Publication 1734-IN582B-EN-P - February 2005

Important User Information

Because of the variety of uses for the products described in this publication, those responsible for the application and use of these products must satisfy themselves that all necessary steps have been taken to assure that each application and use meets all performance and safety requirements, including any applicable laws, regulations, codes and standards. In no event will Rockwell Automation be responsible or liable for indirect or consequential damage resulting from the use or application of these products.

Any illustrations, charts, sample programs, and layout examples shown in this publication are intended solely for purposes of example. Since there are many variables and requirements associated with any particular installation, Rockwell Automation does not assume responsibility or liability (to include intellectual property liability) for actual use based upon the examples shown in this publication.

Allen-Bradley publication SGI-1.1, *Safety Guidelines for the Application, Installation and Maintenance of Solid-State Control* (available from your local Rockwell Automation office), describes some important differences between solid-state equipment and electromechanical devices that should be taken into consideration when applying products such as those described in this publication.

Reproduction of the contents of this copyrighted publication, in whole or part, without written permission of Rockwell Automation, is prohibited.

Throughout this publication, notes may be used to make you aware of safety considerations. The following annotations and their accompanying statements help you to identify a potential hazard, avoid a potential hazard, and recognize the consequences of a potential hazard:

WARNING	Identifies information about practices or circumstances that can cause an explosion in a hazardous environment, which may lead to personal injury or death, property damage, or economic loss.
ATTENTION	Identifies information about practices or circumstances that can lead to personal injury or death, property damage, or economic loss.
IMPORTANT	Identifies information that is critical for successful application and understanding of the product.
BURN HAZARD	Labels may be located on or inside the equipment (e.g., drive or motor) to alert people that surfaces may be dangerous temperatures.
SHOCK HAZARD	Labels may be located on or inside the equipment (e.g., drive or motor) to alert people that dangerous voltage may be present.

Environment and Enclosure

This equipment is intended for use in a Pollution Degree 2 industrial environment, in overvoltage Category II applications (as defined in IEC publication 60664-1), at altitudes up to 2000 meters without derating.

This equipment is considered Group 1, Class A industrial equipment according to IEC/CISPR Publication 11. Without appropriate precautions, there may be potential difficulties ensuring electromagnetic compatibility in other environments due to conducted as well as radiated disturbance.

ATTENTION

This equipment is supplied as "open type" equipment. It must be mounted within an enclosure that is suitably designed for those specific environmental conditions that will be present and appropriately designed to prevent personal injury resulting from accessibility to live parts. The interior of the enclosure must be accessible only by the use of a tool. Subsequent sections of this publication may contain additional information regarding specific enclosure type ratings that are required to comply with certain product safety certifications.

See NEMA Standards publication 250 and IEC publication 60529, as applicable, for explanations of the degrees of protection provided by different types of enclosure. Also, see the appropriate sections in this publication, as well as the Allen-Bradley publication 1770-4.1 ("Industrial Automation Wiring and Grounding Guidelines"), for additional installation requirements pertaining to this equipment.

ATTENTION

Preventing Electrostatic Discharge

This equipment is sensitive to electrostatic discharge, which can cause internal damage and affect normal operation. Follow these guidelines when you handle this equipment:

- Touch a grounded object to discharge potential static.
- Wear an approved grounding wriststrap.
- Do not touch connectors or pins on component boards.
- Do not touch circuit components inside the equipment.
- If available, use a static-safe workstation.
- When not in use, store the equipment in appropriate static-safe packaging.

ATTENTION

POINT I/O is grounded through the DIN rail to chassis ground. Use zinc-plated, yellow-chromated steel DIN rail to assure proper grounding. Using other DIN rail materials (e.g., aluminum, plastic, etc.) which can corrode, oxidize or are poor conductors, can result in improper or intermittent platform grounding.

WARNING

When you connect or disconnect the Removable Terminal Block (RTB) with field side power applied, an electrical arc can occur. This could cause an explosion in hazardous location installations.

Be sure that power is removed or the area is nonhazardous before proceeding.

Before You Begin

To effectively use your adapter, note the following considerations.

Understand Messaging

Class 3 (Explicit Message) requests through the 1734-ACNR adapter to a specific POINT I/O module may not always receive a response from the I/O module. In the case where the I/O module does not reply to the request, the adapter responds with an error code indicating a time-out.

Establish I/O Connections

When you power up a POINT I/O system and establish I/O connections, the outputs transition to the Idle state, applying Idle state data before going to RUN mode. This occurs even when the controller making the connection is already in RUN mode.

Configure Autobaud

The adapter cannot reconfigure an I/O module that you previously configured to operate at a fixed baud rate. When you reuse a POINT I/O module from another POINT I/O system, configure the module to autobaud before using it with the 1734-ACNR adapter.

For More Information

The following related publications are available online at URL http://literature.rockwellautomation.com.

Publication	Publication Number
POINT I/O ControlNet Adapter User Manual	1734-UM008
POINT I/O ControlNet Adapter Release Notes	1734-RN004

Install the ControlNet Adapter

ATTENTION

You must use Series C Point I/O modules with the 1734-ACNR. Series A and B Point I/O modules will not work with the 1734-ACNR.

To install the adapter on the DIN rail prior to installing other base units, proceed as follows.

1. Position the adapter vertically above the DIN rail.
2. Press down firmly to install the adapter on the DIN rail. The locking mechanism will lock the adapter to the DIN rail.
3. Set the node address on the node address thumbwheel.

WARNING

If you connect or disconnect the ControlNet cable with power applied to this module or any device on the network, an electrical arc can occur. This could cause an explosion in hazardous location installations.

Be sure that power is removed or the area is nonhazardous before proceeding.

4. Remove the safety end cap by sliding it up. This exposes the backplane and power interconnections.

ATTENTION

Do not discard the end cap. Use this end cap to cover the exposed interconnections on the last mounting base on the DIN rail. Failure to do so could result in equipment damage or injury from electric shock.

Set the Node Address

Set the node address using the 2-position thumbwheel switch. Valid settings range from 01 to 99. Press the + or - buttons to change the number.

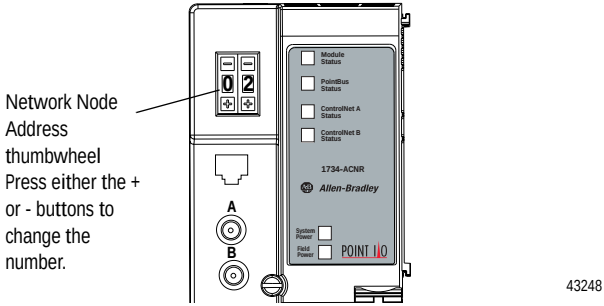

Install a Replacement ControlNet Adapter to an Existing System

ATTENTION

You must use Series C Point I/O modules with the 1734-ACNR. Series A and B Point I/O modules will not work with the 1734-ACNR.

WARNING

When you insert or remove the module while backplane power is on, an electrical arc can occur. This could cause an explosion in hazardous location installations.

Be sure that power is removed or the area is nonhazardous before proceeding. Repeated electrical arcing causes excessive wear to contacts on both the module and its mating connector. Worn contacts may create electrical resistance that can affect module operation.

1. Remove the existing adapter from the DIN rail as follows:
   a. Disconnect the ControlNet connector from the adapter.
   b. Pull up on the RTB removal handle to remove the terminal block.
   c. Remove the adjacent module from its base.
   d. Use a small bladed screwdriver to rotate the DIN rail locking screw to a vertical position. This releases the locking mechanism.
   e. Lift straight up to remove

2. Remove the safety end cap on the replacement adapter by sliding it up. This exposes the backplane and power connections.

3. Position the replacement adapter vertically above the DIN rail. (Make certain the DIN rail lock is in the horizontal position.) Slide the adapter down, allowing the interlocking side pieces to engage the adjacent module.

4. Press firmly to seat the adapter on the DIN rail. The adapter locking mechanism will snap into place.

5. Set the node address on the node address thumbwheel.

6. Insert the end opposite the handle into the base unit. This end has a curved section that engages with the wiring base.

7. Rotate the terminal block into the wiring base until it locks itself into place.

8. Replace the adjacent module in its base.

9. Connect the ControlNet cable to the adapter. Use a tap to connect the adapter to the ControlNet cable. Do not directly connect the adapter to the coax cable.

Wire the ControlNet Adapter

WARNING

If you connect or disconnect the communications cable with power applied to this module or any device on the network, an electrical arc can occur. This could cause an explosion in hazardous location installations.

WARNING

If you connect or disconnect wiring while the field-side power is on, an electrical arc can occur. This could cause an explosion in hazardous location installations. Be sure that power is removed or the area is nonhazardous before proceeding.

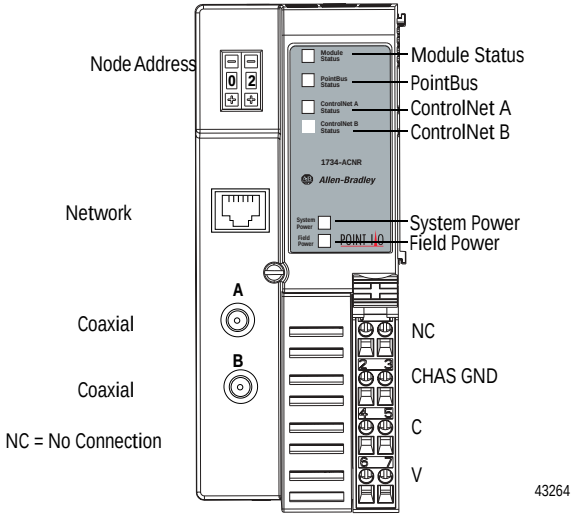

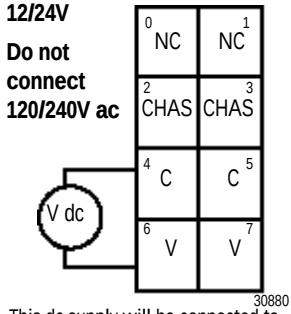

This dc supply will be connected to

NC = No Connection C =

Troubleshoot with the Indicators

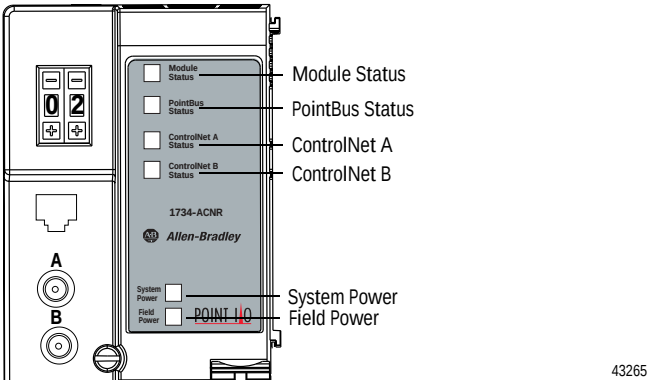

Indication	Probable Cause
Field Power	
Off	Not active; field power is off
Green	Power on; 24V present
System Power	
Off	Not active; field power is off or dc-dc converter problem
Green	System power on; dc-dc converter active (5V)
Module Status	
Off	No power applied to device
Alternating Red/Green	LED powerup test (module self-test)
Flashing Red	Recoverable fault has occurred: Firmware (NVS) update MAC ID changed CPU load exceeded

Solid Red	Unrecoverable fault has occurred: self test failure (checksum failure at powerup, ramtest failure at powerup) firmware fatal error
Flashing Green	Waiting for connection or ControlNet cable break
Solid Green	Module is operating correctly (normal mode)
ControlNet A/B Status	
Viewed Together	
Both Steady Off	Reset, no power or entire network interface deactivated
Alternating Red/Green	Self test mode
Alternating Red/Off	Bad/invalid node configuration (such as duplicate MAC ID)
Both Steady Red	Failed link interface
Viewed Individually	
Steady Off	Channel disabled or channel not supported
Flashing Red/Green	Invalid link configuration
Flashing Red/Off	Severe Link error - link fault or no MAC frames received
Flashing Green/Off	Temporary channel error or listen-only
Steady Green	Normal operation - MAC frames are being received without detected errors
PointBus Status	
Off	Device not powered - check module status indicator
Alternating Red/Green	LED powerup test
Flashing Red	Recoverable fault has occurred: • at power up the number of expected modules does not equal the number of modules present • a module is missing • node fault (I/O connection timeout)

Red	Unrecoverable fault has occurred: • The adapter is bus off • The adapter has failed its duplicate MAC ID check
Flashing Green	Adapter on-line with no connections established • adapter chassis size has not been configured • controller in program/idle mode • ControlNet cable break
Green	Adapter on-line with connections established (normal operation, in run mode)
ControlNet A/B Status	
Viewed Together	
Both Steady Off	Reset, no power or entire network interface deactivated
Alternating Red/Green	Self test mode
Alternating Red/Off	Bad/invalid node configuration (such as duplicate MAC ID)
Both Steady Red	Failed link interface

North American Hazardous Location Approval

The following information applies when operating this equipment in hazardous locations:	Informations sur l'utilisation de cet équipement en environnements dangereux :
Products marked "CL I, DIV 2, GP A, B, C, D" are suitable for use in Class I Division 2 Groups A, B, C, D, Hazardous Locations and nonhazardous locations only. Each product is supplied with markings on the rating nameplate indicating the hazardous location temperature code. When combining products within a system, the most adverse temperature code (lowest "T" number) may be used to help determine the overall temperature code of the system. Combinations of equipment in your system are subject to investigation by the local Authority Having Jurisdiction at the time of installation.	Les produits marqués "CL I, DIV 2, GP A, B, C, D" ne conviennent qu'à une utilisation en environnements de Classe I Division 2 Groupes A, B, C, D dangereux et non dangereux. Chaque produit est livré avec des marquages sur sa plaque d'identification qui indiquent le code de température pour les environnements dangereux. Lorsque plusieurs produits sont combinés dans un système, le code de température le plus défavorable (code de température le plus faible) peut être utilisé pour déterminer le code de température global du système. Les combinaisons d'équipements dans le système sont sujettes à inspection par les autorités locales qualifiées au moment de l'installation.
WARNING **EXPLOSION HAZARD** • Do not disconnect equipment unless power has been removed or the area is known to be nonhazardous. • Do not disconnect connections to this equipment unless power has been removed or the area is known to be nonhazardous. Secure any external connections that mate to this equipment by using screws, sliding latches, threaded connectors, or other means provided with this product. • Substitution of components may impair suitability for Class I, Division 2. • If this product contains batteries, they must only be changed in an area known to be nonhazardous.	**AVERTISSEMENT** **RISQUE D'EXPLOSION** • Couper le courant ou s'assurer que l'environnement est classé non dangereux avant de débrancher l'équipement. • Couper le courant ou s'assurer que l'environnement est classé non dangereux avant de débrancher les connecteurs. Fixer tous les connecteurs externes reliés à cet équipement à l'aide de vis, loquets coulissants, connecteurs filetés ou autres moyens fournis avec ce produit. • La substitution de composants peut rendre cet équipement inadapté à une utilisation en environnement de Classe I, Division 2. • S'assurer que l'environnement est classé non dangereux avant de changer les piles.

European Hazardous Location Approval

European Zone 2 Certification (The following applies when the product bears the EEx Marking)

This equipment is intended for use in potentially explosive atmospheres as defined by European Union Directive 94/9/EC.

DEMKO certifies that this equipment has been found to comply with the Essential Health and Safety Requirements relating to the design and construction of Category 3 equipment intended for use in potentially explosive atmospheres, given in Annex II to this Directive. The examination and test results are recorded in confidential report No 03NK30347. Compliance with the Essential Health and Safety Requirements has been assured by compliance with EN 50021.

IMPORTANT

Observe the following additional Zone 2 certification requirements.

- This equipment is not resistant to sunlight or other sources of UV radiation.
- The secondary of a current transformer shall not be open-circuited when applied in Class I, Zone 2 environments.
- Equipment of lesser Enclosure Type Rating must be installed in an enclosure providing at least IP54 protection when applied in Class I, Zone 2 environments.
- This equipment shall be used within its specified ratings defined by Allen-Bradley.
- Provision shall be made to prevent the rated voltage from being exceeded by transient disturbances of more than 40% when applied in Class I, Zone 2 environments.

Specifications

Specifications - 1734-ACNR ControlNet Adapter	
Expansion I/O Capacity	Maximum of 63 modules Maximum of 5 Rack Optimized connections (for digital modules only) Maximum of 25 Direct connections 1734-ACNR backplane current output = 1.0A maximum. See list following for backplane current consumption for each Point I/O catalog number and current consumption for each of the Point modules connected to the 1734-ACNR. Verify it is below 1.0A. Backplane current can be extended beyond 1.0A with a 1734-EP24DC Backplane Extension Power Supply. The 1734-EP24DC can supply up to an additional 1.3A of backplane current. Multiple 1734-EP24DC modules can be used to reach the maximum of 63 modules.

Specifications - 1734-ACNR ControlNet Adapter (continued)		
Expansion I/O Capacity	**Cat. No.**	**PointBus Current Requirements**
	1734-IB2	75mA
	1734-IB4	75mA
	1734-IB8	75mA
	1734-IV2	75mA
	1734-IV4	75mA
	1734-OB2	75mA
	1734-OB4	75mA
	1734-OB8	75mA
	1734-OB2E	75mA
	1734-OB2EP	75mA
	1734-OB4E	75mA
	1734-OB8E	75mA
	1734-OV2E	75mA
	1734-OV4E	75mA
	1734-OW2	80mA
	1734-OX2	100mA
	1734-IE2C	75mA
	1734-OE2C	75mA
	1734-IE2V	75mA
	1734-OE2V	75mA
	1734-IA2	75mA
	1734-IM2	75mA
	1734-OA2	75mA
	1734-IJ2	160mA
	1734-IK2	160mA
	1734-IR2	220mA
	1734-IT2I	175mA
	1734-SSI	110mA
	1734-232ASC	75mA
	1734-VHSC5	180mA
	1734-VHSC24	180mA
ControlNet Communication Rate	5Mbits/s (fixed value)	
Module Location	Starter module - left side of the 1734 system	

Power Supply Specifications	
Input Voltage Rating	24V dc nominal 10-28.8V dc range
Field Side Power Requirements	24V dc (+20% = 28.8V dc maximum) @ 425mA maximum
Inrush Current	6A maximum for 10ms
Interruption	Output voltage will stay within specifications when input drops out for 10ms at 10V with maximum load.

General Specifications	
Indicators	4 red/green status indicators Adapter status PointBus status ControlNet A status ControlNet B status 2 green power supply status indicators: System Power (PointBus 5V power Field Power (24V from field supply)
Power Consumption	10.2W maximum @ 28.8V dc
Power Dissipation	5.0W maximum @ 28.8V
PointBus Output Current	1A maximum @ 5V dc ±5% (4.75 - 5.25)
Input Overvoltage Protection	Reverse polarity protected
Thermal Dissipation	16.9 BTU/hr maximum @ 28.8V dc
Isolation Voltage	Tested to withstand 750Vac for 60s
Field Power Bus Nominal Voltage Supply Voltage Range Supply Current	 24V dc 10-28.8V dc range, 10A maximum
Dimensions Inches (Millimeters)	3.0H x 2.16W x 5.25L (76.2H x 54.9W x 133.4L)

ESD Immunity	IEC 61000-4-2: 6kV contact discharges 8kV air discharges
Radiated RF Immunity	IEC 61000-4-3: 10V/m with 1kHz sine-wave 80%AM from 30MHz to 2000MHz 10V/m with 200Hz 50% pulse 100%AM from 900MHz
EFT/B Immunity	IEC 61000-4-4: ±4kV at 5.0kHz on power ports ±2kV at 5.0kHz on communications ports
Surge Transient Immunity	IEC 61000-4-5: ±1kV line-line(DM) and ±2kV line-earth(CM) on power ports ±2kV line-earth(CM) on communications ports
Conducted RF Immunity	IEC 61000-4-6: 10Vrms with 1kHz sine-wave 80%AM from 150kHz to 80MHz
Emissions	CISPR 11 Group 1, Class A
Enclosure Type Rating	None (open-style)
Power Conductors Wire Size	14 AWG (2.5mm^2) - 22 AWG (0.25mm^2) solid or stranded copper wire rated at 75°C or higher 3/64 inch (1.2mm) insulation maximum
ControlNet Conductors	See Publication CNET-IN002A
Wiring Category[1,2]	1 - on power ports 2 - on communications ports
Terminal Base Screw Torque	7 pound-inches (0.6Nm)
Mass	9.0 oz/255 grams
Publications - User Manual	1734-UM008

Environmental Conditions	
Operational Temperature	IEC 60068-2-1 (Test Ad, Operating Cold), IEC 60068-2-2 (Test Bd, Operating Dry Heat), IEC 60068-2-14 (Test Nb, Operating Thermal Shock): -20 to 55° C (-4 to 131° F)
Storage Temperature	IEC 60068-2-1 (Test Ab, Unpackaged Nonoperating Cold), IEC 60068-2-2 (Test Bb, Unpackaged Nonoperating Dry Heat), IEC 60068-2-14 (Test Na, Unpackaged Nonoperating Thermal Shock): -40 to 85° C (-40 to 185° F)
Relative Humidity	IEC 60068-2-30 (Test Db, Unpackaged Nonoperating Damp Heat): 5 to 95% noncondensing
Shock	IEC 60068-2-27 (Test Ea, Unpackaged Shock)
Operating	30g
Nonoperating	50g
Vibration	IEC 60068-2-6 (Test Fc, Operating) 5g @ 10-500Hz

Certifications[3] (when product is marked)	c-UL-us	UL Listed for Class I, Division 2 Group A,B,C,D Hazardous Locations, certified for U.S. and Canada
	EEx	European Union 94/9/EC ATEX Directive, compliant with: EN 50021; Potentially Explosive Atmospheres, Protection “n” (Zone 2)
	CE	European Union 89/336/EEC EMC Directive, compliant with: EN 61000-6-4; Industrial Emissions EN 50082-2; Industrial Immunity EN 61326; Meas./Control/Lab., Industrial Requirements EN 61000-6-2; Industrial Immunity
	C-Tick	Australian Radiocommunications Act, compliant with: AS/NZS CISPR11; Industrial Emissions
	CI	ControlNet Int’l conformance tested to ControlNet specifications

1 Use this Conductor Category information for planning conductor routing. Refer to ‘Industrial Automation Wiring and Grounding Guidelines”, publication 1770-4.1.

2 Use this Conductor Category information for planning conductor routing as described int he appropriate System Level Installatin manual.

3 See the Product Certification link at www.ab.com for Declarations of Conformity, Certificates, and other certification details.

POINT I/O is a trademark of Rockwell Automation.
ControlNet is a trademark of ControlNet International.

Notes:

Rockwell Automation Support

Rockwell Automation provides technical information on the web to assist you in using its products. At http://support.rockwellautomation.com, you can find technical manuals, a knowledge base of FAQs, technical and application notes, sample code and links to software service packs, and a MySupport feature that you can customize to make the best use of these tools.

For an additional level of technical phone support for installation, configuration and troubleshooting, we offer TechConnect Support programs. For more information, contact your local distributor or Rockwell Automation representative, or visit http://support.rockwellautomation.com.

Installation Assistance

If you experience a problem with a hardware module within the first 24 hours of installation, please review the information that's contained in this manual. You can also contact a special Customer Support number for initial help in getting your module up and running:

United States	1.440.646.3223 Monday – Friday, 8am – 5pm EST
Outside United States	Please contact your local Rockwell Automation representative for any technical support issues.

New Product Satisfaction Return

Rockwell tests all of its products to ensure that they are fully operational when shipped from the manufacturing facility. However, if your product is not functioning and needs to be returned:

United States	Contact your distributor. You must provide a Customer Support case number (see phone number above to obtain one) to your distributor in order to complete the return process.
Outside United States	Please contact your local Rockwell Automation representative for return procedure.

www.rockwellautomation.com

Corporate Headquarters
Rockwell Automation, 777 East Wisconsin Avenue, Suite 1400, Milwaukee, WI, 53202-5302 USA, Tel: (1) 414.212.5200, Fax: (1) 414.212.5201

Headquarters for Allen-Bradley Products, Rockwell Software Products and Global Manufacturing Solutions
Americas: Rockwell Automation, 1201 South Second Street, Milwaukee, WI 53204-2496 USA, Tel: (1) 414.382.2000, Fax: (1) 414.382.4444
Europe/Middle East/Africa: Rockwell Automation SA/NV, Vorstlaan/Boulevard du Souverain 36, 1170 Brussels, Belgium, Tel: (32) 2 663 0600, Fax: (32) 2 663 0640
Asia Pacific: Rockwell Automation, Level 14, Core F, Cyberport 3, 100 Cyberport Road, Hong Kong, Tel: (852) 2887 4788, Fax: (852) 2508 1846

Headquarters for Dodge and Reliance Electric Products
Americas: Rockwell Automation, 6040 Ponders Court, Greenville, SC 29615-4617 USA, Tel: (1) 864.297.4800, Fax: (1) 864.281.2433
Europe/Middle East/Africa: Rockwell Automation, Herman-Heinrich-Gossen-Strasse 3, 50858 Köln, Germany, Tel: 49 (0) 2234 379410, Fax: 49 (0) 2234 3794164
Asia Pacific: Rockwell Automation, 55 Newton Road, #11-01/02 Revenue House, Singapore 307987, Tel: (65) 6356 9077, Fax: (65) 6356 9011

Publication 1734-IN582B-EN-P - February 2005 PN 957726-64

Supersedes Publication 1734-IN582A-EN-P - December 2002 Copyright © 2005 Rockwell Automation, Inc. All rights reserved. Printed in the U.S.A.