Allen-Bradley

MicroLogix 1200 Programmable Controllers

Bulletin 1762 Controllers and Expansion I/O

User Manual

Rockwell Automation

Important User Information

Solid state equipment has operational characteristics differing from those of electromechanical equipment. Safety Guidelines for the Application, Installation and Maintenance of Solid State Controls publication SGI-1.1 available from your local Rockwell Automation sales office or online at http://www.literature.rockwellautomation.com describes some important differences between solid state equipment and hard-wired electromechanical devices. Because of this difference, and also because of the wide variety of uses for solid state equipment, all persons responsible for applying this equipment must satisfy themselves that each intended application of this equipment is acceptable.

In no event will Rockwell Automation, Inc. be responsible or liable for indirect or consequential damages resulting from the use or application of this equipment.

The examples and diagrams in this manual are included solely for illustrative purposes. Because of the many variables and requirements associated with any particular installation, Rockwell Automation, Inc. cannot assume responsibility or liability for actual use based on the examples and diagrams.

No patent liability is assumed by Rockwell Automation, Inc. with respect to use of information, circuits, equipment, or software described in this manual.

Reproduction of the contents of this manual, in whole or in part, without written permission of Rockwell Automation, Inc. is prohibited.

Throughout this manual we use notes to make you aware of safety considerations.

WARNING

Identifies information about practices or circumstances that can cause an explosion in a hazardous environment, which may lead to personal injury or death, property damage, or economic loss.

IMPORTANT

Identifies information that is critical for successful application and understanding of the product.

ATTENTION

Identifies information about practices or circumstances that can lead to personal injury or death, property damage, or economic loss. Attentions help you:

- identify a hazard
- avoid a hazard
- recognize the consequence

SHOCK HAZARD

Labels may be located on or inside the drive to alert people that dangerous voltage may be present.

BURN HAZARD

Labels may be located on or inside the drive to alert people that surfaces may be dangerous temperatures.

To help you find new and updated information in this release of the manual, we have included change bars as shown to the right of this paragraph.

The table below lists the sections that document new features and additional or updated information on existing features.

For this information:	See
Updated list of communication cables.	1-4, 2-4, 4-4
Updated list of warnings for Hazardous Location considerations	2-4
Updated list of cables for Cable Selection Guide.	4-13
Removed catalog 1761-NET-DNI	1-4, Chapter 4
Added Relay Output life to Specifications.	A-3
Added Relay Life Chart to Specifications.	A-4

Firmware Revision History

Features are added to the controllers through firmware upgrades. See the latest release notes, 1762-RN001, to be sure that your controller's firmware is at the level you need. Firmware upgrades are not required, except to allow you access to the new features.

Notes:

Important User Information 1-2
Firmware Revision History . . . . . Summary of Changes-1

Preface

Who Should Use This Manual. P-1
Purpose of This Manual. P-1
Related Documentation. P-2
Common Techniques Used in This Manual P-2

Chapter 1

Hardware Overview

Hardware Features 1-1
Component Descriptions. 1-2
MicroLogix 1200 Memory Module and/or Real-time Clock. . . . 1-2
1762 Expansion I/O 1-3
Communication Cables 1-4
Program the Controller 1-4
Communication Options 1-4

Chapter 2

Install Your Controller

Required Tools 2-1
Agency Certifications 2-1
Compliance to European Union Directives 2-2
EMC Directive. 2-2
Low Voltage Directive. 2-2
Installation Considerations 2-2
Safety Considerations. 2-3
Hazardous Location Considerations. 2-3
Disconnect Main Power 2-5
Safety Circuits. 2-5
Power Distribution 2-5
Periodic Tests of Master Control Relay Circuit 2-6
Power Considerations 2-6
Isolation Transformers 2-6
Power Supply Inrush 2-6
Loss of Power Source 2-7
Input States on Power Down 2-7
Other Types of Line Conditions. 2-7
Prevent Excessive Heat 2-7
Master Control Relay 2-8
Use Emergency-Stop Switches 2-9
Schematic (Using IEC Symbols) 2-10
Schematic (Using ANSI/CSA Symbols). 2-11
Install a Memory Module or Real-time Clock. 2-12
Controller Mounting Dimensions 2-13
Controller and
Expansion I/O Spacing. 2-13
Mount the Controller. 2-14
DIN Rail Mounting 2-15

Panel Mounting 2-16
1762 Expansion I/O Dimensions 2-17
Mount 1762
Expansion I/O 2-17
DIN Rail Mounting 2-17
Mount on Panel 2-18
Connect Expansion I/O 2-19

Chapter 3

Wire Your Controller

Wire Requirements 3-1
Wire without Spade Lugs 3-2
Wire with Spade Lugs 3-3
Use Surge Suppressors 3-3
Recommended Surge Suppressors 3-5
Ground the Controller 3-6
Wiring Diagrams 3-7
Terminal Block Layouts 3-7
Terminal Groupings 3-9
Sinking and Sourcing Wiring Diagrams 3-12
1762-L24AWA, 1762-L24BWA, 1762-L24BXB, 1762-L24AWAR, 1762-L24BWAR and 1762-L24BXBR Wiring Diagrams 3-12
1762-L40AWA, 1762-L40BWA, 1762-L40BXB, 1762-L40AWAR, 1762-L40BWAR and 1762-L40BXBR Wiring Diagrams 3-15
Controller I/O Wiring 3-17
Minimize Electrical Noise 3-17
Expansion I/O Wiring 3-18
Discrete Wiring Diagrams 3-18
Analog Wiring 3-25

Chapter 4

Communication Connections

Introduction 4-1
Supported Communication Protocols 4-1
Default Communication Configuration 4-2
Use the Communications Toggle Push Button 4-3
Connect to the RS-232 Port 4-4
Make a DF1 Point-to-Point Connection 4-5
Use a Modem 4-5
Isolated Modem Connection 4-6
Connect to a DF1 Half-duplex Network 4-8
Connect to a DH-485 Network 4-9
Recommended Tools 4-9
DH-485 Communication Cable 4-10
Connect the Communication Cable to the DH-485 Connector 4-10
Ground and Terminate the DH-485 Network 4-12
Connect the AIC+ 4-12

Cable Selection Guide 4-13
Recommended User-supplied Components. 4-15
Safety Considerations 4-17
Install and Attach the AIC+ 4-17
Apply Power to the AIC+. 4-17

Chapter 5

Use Trim Pots

Trim Pot Operation 5-1
Trim Pot Information Function File 5-2
Error Conditions 5-2

Chapter 6

Use Real-time Clock and Memory Modules

Real-time Clock Operation 6-1
Removal/Insertion Under Power 6-1
Write Data to the Real-time Clock 6-2
RTC Battery Operation 6-2
Memory Module Operation. 6-3
User Program and Data Back-up 6-3
Program Compare 6-4
Data File Download Protection 6-4
Memory Module Write Protection 6-4
Removal/Insertion Under Power 6-4

Appendix A

Specifications

Controller Specifications A-1
Expansion I/O Specifications A-8
Discrete I/O Modules A-8
Analog Modules A-15
Combination Module DC-Input/Relay Output. A-23

Appendix B

1762 Replacement Parts

MicroLogix 1200 RTB Replacement Kit B-1

Appendix C

Troubleshoot Your System

Interpret LED Indicators. C-1
Normal Operation C-2
Error Conditions C-2
Controller Error Recovery Model C-3
Analog Expansion I/O Diagnostics and Troubleshooting C-4
Module Operation and Channel Operation C-4
Power-up Diagnostics C-4
Critical and Noncritical Errors C-5
Module Error Definition Table. C-5
Error Codes C-7

Call Rockwell Automation for Assistance. C-8

Appendix D

Use Control Flash to Upgrade Your Operating System

Prepare for Upgrade. D-1
Install ControlFlash Software D-1
Prepare the Controller for Updating. D-2
Sequence of Operation D-2
Missing/Corrupt OS LED Pattern D-2

Appendix E

Connect to Networks via RS-232 Interface

RS-232 Communication Interface. E-1
DF1 Full-duplex Protocol E-1
DF1 Half-duplex Protocol. E-2
Use Modems with MicroLogix 1200 Programmable Controllers E-3
DH-485 Communication Protocol E-5
Devices that use the DH-485 Network E-5
Important DH-485 Network Planning Considerations E-6
Example DH-485 Connections. E-9
Modbus Communication Protocol E-12
ASCII E-12

Appendix F

System Loading and Heat Dissipation

System Loading Limitations. F-1
System Current Loading Example Calculations (24-point Controller) F-1
Validate the System F-2
System Loading Worksheet F-4
Current Loading F-4
System Current Loading Example Calculations (40-point Controller) F-6
System Loading Worksheet F-8
Current Loading. F-8
Calculating Heat Dissipation F-10

Glossary

Index

Read this preface to familiarize yourself with the rest of the manual. It provides information concerning:

- who should use this manual
- the purpose of this manual
- related documentation
- conventions used in this manual

Who Should Use This Manual

Use this manual if you are responsible for designing, installing, programming, or troubleshooting control systems that use MicroLogix 1200 controllers.

You should have a basic understanding of electrical circuitry and familiarity with relay logic. If you do not, obtain the proper training before using this product.

Purpose of This Manual

This manual is a reference guide for MicroLogix 1200 controllers and expansion I/O. It describes the procedures you use to install, wire, and troubleshoot your controller. This manual:

- explains how to install and wire your controllers
- gives you an overview of the MicroLogix 1200 controller system

Refer to publication 1762-RM001, MicroLogix 1200 and 1500 Programmable Controllers Instruction Set Reference Manual, for the MicroLogix 1200 and 1500 instruction set and for application examples to show the instruction set in use. Refer to your RSLogix 500 programming software user documentation for more information on programming your MicroLogix 1200 controller.

Related Documentation

The following documents contain additional information concerning Rockwell Automation products. To obtain a copy, contact your local Rockwell Automation office or distributor.

Resource	Description
MicroLogix 1200 and 1500 Programmable Controllers Instruction Set Reference Manual, publication 1762-RM001	Information on the MicroLogix 1200 Controllers instruction set.
MicroLogix 1200 Programmable Controllers Installation Instructions, publication 1762-IN006	Information on mounting and wiring the MicroLogix 1200 Controllers, including a mounting template for easy installation.
Advanced Interface Converter (AIC+) User Manual, publication 1761-UM004	A description on how to install and connect an AIC+. This manual also contains information on network wiring.
DeviceNet Interface User Manual, publication 1761-UM005	Information on how to install, configure, and commission a DNI.
DF1 Protocol and Command Set Reference Manual, publication 1770-6.5.16	Information on DF1 open protocol.
Modbus Protocol Specifications available from www.modbus.org	Information about the Modbus protocol.
Allen-Bradley Programmable Controller Grounding and Wiring Guidelines, publication 1770-4.1	In-depth information on grounding and wiring Allen-Bradley programmable controllers.
Application Considerations for Solid-State Controls, publication SGI-1.1	A description of important differences between solid-state programmable controller products and hard-wired electromechanical devices.
National Electrical Code - Published by the National Fire Protection Association of Boston, MA.	An article on wire sizes and types for grounding electrical equipment.
Allen-Bradley Industrial Automation Glossary, publication AG-7.1	A glossary of industrial automation terms and abbreviations.

Common Techniques Used in This Manual

The following conventions are used throughout this manual:

- Bulleted lists such as this one provide information, not procedural steps.
- Numbered lists provide sequential steps or hierarchical information.

Hardware Overview

Hardware Features

The Bulletin 1762, MicroLogix 1200 programmable controller contains a power supply, input and output circuits, and a processor. The controller is available in 24 I/O and 40 I/O configurations.

Figure 1.1 Hardware Features of the Controller

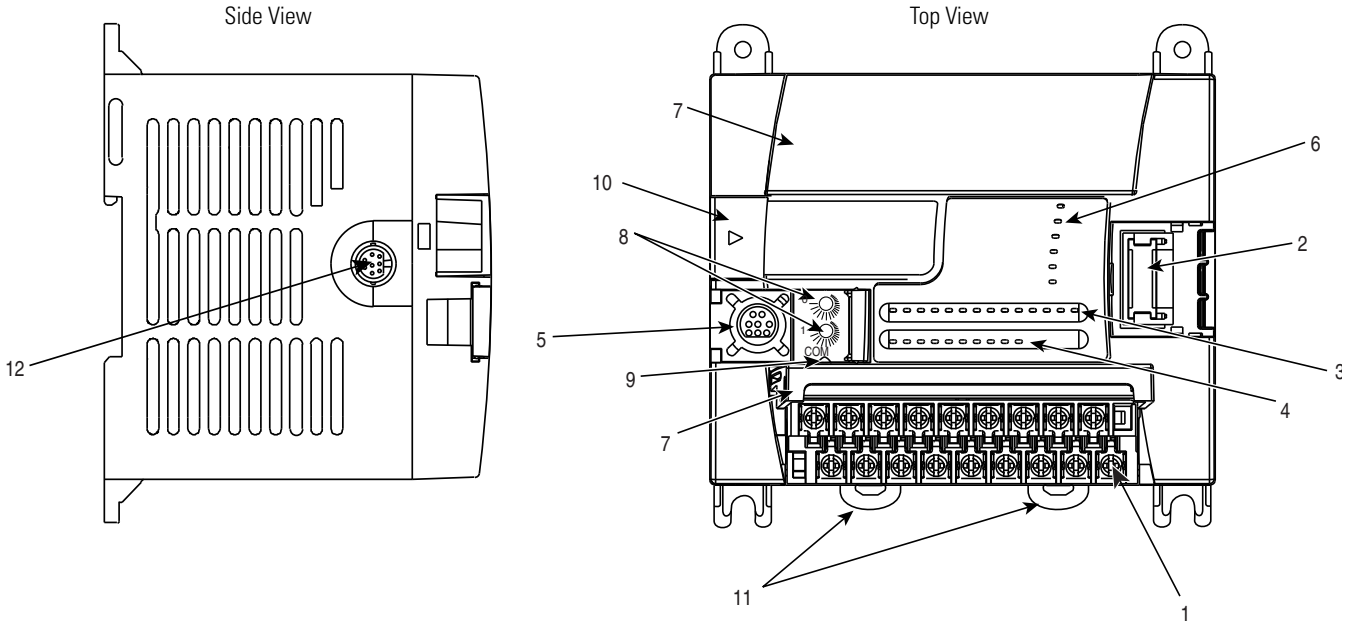

Table 1.1 Hardware Features

Feature	Description	Feature	Description
1	Terminal Blocks (Removable Terminal Blocks on 40-point controllers only.)	7	Terminal Doors and Labels
2	Bus Connector Interface to Expansion I/O	8	Trim Pots
3	Input LEDs	9	Communications Toggle Push Button
4	Output LEDs	10	Memory Module Port Cover(1) -or- Memory Module and/or Real-Time Clock(2)
5	Communication Port/ Channel 0	11	DIN Rail Latches
6	Status LEDs	12	Programmer/HMI Port (Equipped with 1762-LxxxxxR controllers only)

(1) Shipped with controller.

(2) Optional equipment.

Table 1.2 Controller Input Power and Embedded I/O

Catalog Number	Description		
	Input Power	Inputs	Outputs
1762-L24AWA, 1762-L24AWAR	120/240V ac	(14) 120V ac	(10) relay
1762-L24BWA, 1762-L24BWAR	120/240V ac	(10) 24V dc (4) fast 24V dc	(10) relay
1762-L24BXB, 1762-L24BXBR	24V dc	(10) 24V dc (4) fast 24V dc	(5) relay, (4) 24V dc FET (1) high-speed 24V dc FET
1762-L40AWA, 1762-L40AWAR	120/240V ac	(24) 120V ac	(16) relay
1762-L40BWA, 1762-L40BWAR	120/240V ac	(20) 24V dc (4) fast 24V dc	(16) relay
1762-L40BXB, 1762-L40BXBR	24V dc	(20) 24V dc (4) fast 24V dc	(8) relay, (7) 24V dc FET (1) high-speed 24V dc FET

Component Descriptions

These sections provide component descriptions for:

- MicroLogix 1200 Memory Module and/or Real-time Clock
- 1762 Expansion I/O

MicroLogix 1200 Memory Module and/or Real-time Clock

The controller is shipped with a memory module port cover in place. You can order a memory module, real-time clock, or memory module and real-time clock as an accessory.

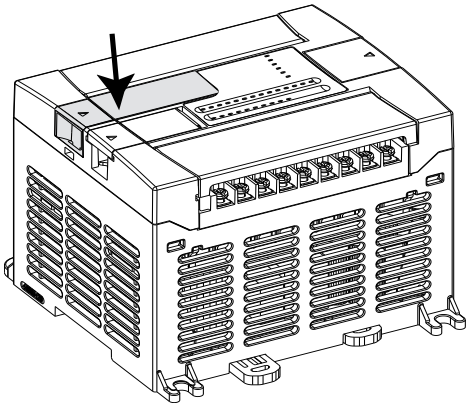

Table 1.3 Memory Module and/or Real-time Clock

Catalog Number	Description
1762-MM1	Memory Module only
1762-RTC	Real-time Clock only
1762-MM1RTC	Memory Module and Real-Time Clock

1762 Expansion I/O

1762 expansion I/O can be connected to the MicroLogix 1200 controller, as shown below.

1762 Expansion I/O

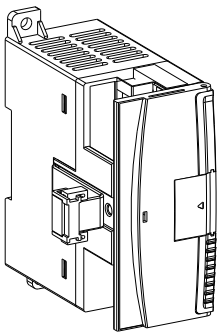

1762 Expansion I/O Connected to MicroLogix 1200 Controller

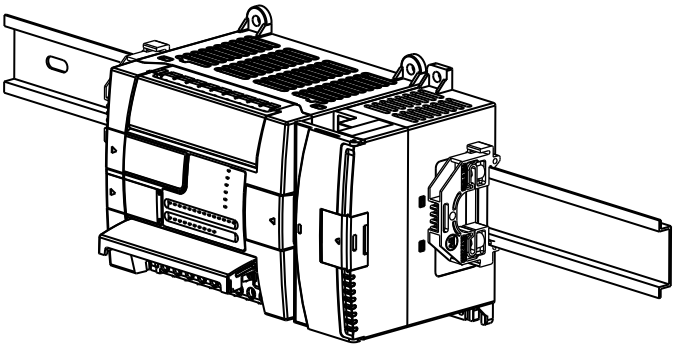

TIP A maximum of six I/O modules, in certain combinations, may be connected to a controller. See Appendix F, System Loading and Heat Dissipation, to determine valid combinations.

Table 1.4 Expansion I/O

Catalog Number	Descriptions
1762-IA8	8-point 120V ac Input
1762-IQ8	8-point Sink/Source 24V dc Input
1762-IQ16	16-point Sink/Source 24V dc Input
1762-IQ32T	32-point Sink/Source 24V dc Input Module
1762-OA8	8-point AC Triac Output
1762-OB8	8-point Sourcing 24V dc Output
1762-OB16	16-point Sourcing 24V dc Output
1762-OB32T	32-point Sourcing 24V dc Output Module
1762-OV32T	32-point Sinking 24V dc Output Module
1762-OW8	8-point AC/DC Relay Output
1762-OW16	16-point AC/DC Relay Output
1762-OX6I	6-point Isolated Relay Output
1762-IF2OF2	2-channel Analog Voltage/Current Input 2-channel Analog Voltage/Current Output
1762-IF4	4-channel Analog Voltage/Current Input
1762-OF4	4-channel Analog Voltage/Current Output
1762-IR4	RTD/Resistance Input
1762-IT4	Thermocouple/mV Input
1762-IQ8OW6	DC-input/Relay-output Combination Module

Communication Cables

Use only the following communication cables with the MicroLogix 1200 controllers.

- 1761-CBL-PM02 series C or later
- 1761-CBL-HM02 series C or later
- 1761-CBL-AM00 series C or later
- 1761-CBL-AP00 series C or later
- 1761-CBL-PH02 Series A or later
- 1761-CBL-AH02 Series A or later
- 2707-NC8 series A or later
- 2702-NC9 series B or later
- 2707-NC10 series B or later
- 2707-NC11 series B or later

Program the Controller

You program the MicroLogix 1200 programmable controller using RSLogix 500, revision 4 or later. You must use revision 4.5 or later of RSLogix 500 in order to use the new features of the series B MicroLogix 1200 controllers, including the full ASCII instruction set. Communication cables for programming are not included with the software.

Communication Options

The MicroLogix 1200 can be connected to a personal computer. It can also be connected to a DH-485 network, or a Modbus network as an RTU Master or RTU Slave using an Advanced Interface Converter (catalog number 1761-NET-AIC). The controller can also be connected to DF1 Half-duplex networks as an RTU Master or RTU Slave. Series B controllers may also be connected to serial devices using ASCII.

See Chapter 4 Communication Connections for more information on connecting to the available communication options.

The 1762-LxxxxxR controllers provide an additional communication port called the Programmer/HMI Port. This port supports DF1 full-duplex protocol only. The controller cannot initiate messages through this port. It can only respond to messages sent to it. All communication parameters are fixed and cannot be changed by a user.

See Default Communication Configuration on page 4-2 for the configuration settings.

Install Your Controller

This chapter shows you how to install your controller.

Topics include:

- required tools
- agency certifications
- compliance to European Union Directives
- installation considerations
- safety considerations
- power considerations
- preventing excessive heat
- master control relay
- install the memory module and/or real-time clock
- controller mounting dimensions
- controller and expansion I/O spacing
- mount the controller
- mount 1762 expansion I/O
- connect 1762 expansion I/O

Required Tools

You need a screwdriver and a drill.

Agency Certifications

- UL 508
- C-UL under CSA C22.2 no. 142
- Class I, Division 2, Groups A, B, C, D (UL 1604, C-UL under CSA C22.2 no. 213)
- CE compliant for all applicable directives
- C-Tick compliant for all applicable acts

Compliance to European Union Directives

This product has the CE mark and is approved for installation within the European Union and EEA regions. It has been designed and tested to meet the following directives.

EMC Directive

This product is tested to meet Council Directive 89/336/EEC Electromagnetic Compatibility (EMC) and the following standards, in whole or in part, documented in a technical construction file:

- EN 50081-2
  EMC - Generic Emission Standard, Part 2 - Industrial Environment
- EN 50082-2
  EMC - Generic Immunity Standard, Part 2 - Industrial Environment

This product is intended for use in an industrial environment.

Low Voltage Directive

This product is tested to meet Council Directive 73/23/EEC Low Voltage, by applying the safety requirements of EN 61131-2 Programmable Controllers, Part 2 - Equipment Requirements and Tests.

For specific information required by EN 61131-2, see the appropriate sections in this publication, as well as the following Allen-Bradley publications:

- Industrial Automation Wiring and Grounding Guidelines for Noise Immunity, publication 1770-4.1
- Guidelines for Handling Lithium Batteries, publication AG-5.4
- Automation Systems Catalog, publication B113

Installation Considerations

Most applications require installation in an industrial enclosure (Pollution Degree 2[(1)]) to reduce the effects of electrical interference (Over Voltage Category II[(2)]) and environmental exposure. Locate your controller as far as possible from power lines, load lines, and other sources of electrical noise such as hard-contact switches, relays, and AC motor drives. For more information on proper grounding guidelines, see the Industrial Automation Wiring and Grounding Guidelines publication 1770-4.1.

(1) Pollution Degree 2 is an environment where normally only non-conductive pollution occurs except that occasionally temporary conductivity caused by condensation shall be expected.

(2) Overvoltage Category II is the load level section of the electrical distribution system. At this level, transient voltages are controlled and do not exceed the impulse voltage capability of the products insulation.

ATTENTION

Vertical mounting of the controller is not recommended due to heat build-up considerations.

ATTENTION

Be careful of metal chips when drilling mounting holes for your controller or other equipment within the enclosure or panel. Drilled fragments that fall into the controller or I/O modules could cause damage. Do not drill holes above a mounted controller if the protective debris shields are removed or the processor is installed.

Safety Considerations

Safety considerations are an important element of proper system installation. Actively thinking about the safety of yourself and others, as well as the condition of your equipment, is of primary importance. We recommend reviewing the following safety considerations.

Hazardous Location Considerations

This equipment is suitable for use in Class I, Division 2, Groups A, B, C, D or non-hazardous locations only. The following WARNING statement applies to use in hazardous locations.

WARNING

EXPLOSION HAZARD

- Substitution of components may impair suitability for Class I, Division 2.
- Do not replace components or disconnect equipment unless power has been switched off.
- Do not connect or disconnect components unless power has been switched off.
- This product must be installed in an enclosure. All cables connected to the product must remain in the enclosure or be protected by conduit or other means.
- All wiring must comply with N.E.C. article 501-4(b).
- The interior of the enclosure must be accessible only by the use of a tool.
- For applicable equipment (for example, relay modules), exposure to some chemicals may degrade the sealing properties of the materials used in these devices:
  - Relays, epoxy

  It is recommended that you periodically inspect these devices for any degradation of properties and replace the module if degradation is found.

Use only the following communication cables in Class I, Division 2 hazardous locations.

Communication Cables for Class I, Division 2 Hazardous Locations
1761-CBL-PM02 series C or later
1761-CBL-HM02 series C or later
1761-CBL-AM00 series C or later
1761-CBL-AP00 series C or later
1761-CBL-PH02 series A or later
1761-CBL-AH02 series A or later
2707-NC8 series A or later
2707-NC9 series B or later
2707-NC10 series B or later
2707-NC11 series B or later

Disconnect Main Power

WARNING

Explosion Hazard

Do not replace components or disconnect equipment unless power has been switched off.

The main power disconnect switch should be located where operators and maintenance personnel have quick and easy access to it. In addition to disconnecting electrical power, all other sources of power (pneumatic and hydraulic) should be de-energized before working on a machine or process controlled by a controller.

Safety Circuits

WARNING

Explosion Hazard

Do not connect or disconnect connectors while circuit is live.

Circuits installed on the machine for safety reasons, like overtravel limit switches, stop push buttons, and interlocks, should always be hard-wired directly to the master control relay. These devices must be wired in series so that when any one device opens, the master control relay is de-energized, thereby removing power to the machine. Never alter these circuits to defeat their function. Serious injury or machine damage could result.

Power Distribution

There are some points about power distribution that you should know:

- The master control relay must be able to inhibit all machine motion by removing power to the machine I/O devices when the relay is de-energized. It is recommended that the controller remain powered even when the master control relay is de-energized.
- If you are using a dc power supply, interrupt the load side rather than the ac line power. This avoids the additional delay of power supply turn-off. The dc power supply should be powered directly from the fused secondary of the transformer. Power to the dc input and output circuits should be connected through a set of master control relay contacts.

Periodic Tests of Master Control Relay Circuit

Any part can fail, including the switches in a master control relay circuit. The failure of one of these switches would most likely cause an open circuit, which would be a safe power-off failure. However, if one of these switches shorts out, it no longer provides any safety protection. These switches should be tested periodically to assure they will stop machine motion when needed.

Power Considerations

The following explains power considerations for the micro controllers.

Isolation Transformers

You may want to use an isolation transformer in the ac line to the controller. This type of transformer provides isolation from your power distribution system to reduce the electrical noise that enters the controller and is often used as a step-down transformer to reduce line voltage. Any transformer used with the controller must have a sufficient power rating for its load. The power rating is expressed in volt-amperes (VA).

Power Supply Inrush

During power-up, the MicroLogix 1200 power supply allows a brief inrush current to charge internal capacitors. Many power lines and control transformers can supply inrush current for a brief time. If the power source cannot supply this inrush current, the source voltage may sag momentarily.

The only effect of limited inrush current and voltage sag on the MicroLogix 1200 is that the power supply capacitors charge more slowly. However, the effect of a voltage sag on other equipment should be considered. For example, a deep voltage sag may reset a computer connected to the same power source. The following considerations determine whether the power source must be required to supply high inrush current:

- The power-up sequence of devices in a system.
- The amount of the power source voltage sag if the inrush current cannot be supplied.
- The effect of voltage sag on other equipment in the system.

If the entire system is powered-up at the same time, a brief sag in the power source voltage typically will not affect any equipment.

Loss of Power Source

The power supply is designed to withstand brief power losses without affecting the operation of the system. The time the system is operational during power loss is called 'program scan hold-up time after loss of power'. The duration of the power supply hold-up time depends on the type and state of the I/O, but is typically between 10 milliseconds and 3 seconds. When the duration of power loss reaches this limit, the power supply signals the processor that it can no longer provide adequate dc power to the system. This is referred to as a power supply shutdown. The processor then performs an orderly shutdown of the controller.

Input States on Power Down

The power supply hold-up time as described above is generally longer than the turn-on and turn-off times of the inputs. Because of this, the input state change from 'On' to 'Off' that occurs when power is removed may be recorded by the processor before the power supply shuts down the system. Understanding this concept is important. The user program should be written to take this effect into account.

Other Types of Line Conditions

Occasionally the power source to the system can be temporarily interrupted. It is also possible that the voltage level may drop substantially below the normal line voltage range for a period of time. Both of these conditions are considered to be a loss of power for the system.

Prevent Excessive Heat

For most applications, normal convective cooling keeps the controller within the specified operating range. Ensure that the specified temperature range is maintained. Proper spacing of components within an enclosure is usually sufficient for heat dissipation.

In some applications, a substantial amount of heat is produced by other equipment inside or outside the enclosure. In this case, place blower fans inside the enclosure to assist in air circulation and to reduce "hot spots" near the controller.

Additional cooling provisions might be necessary when high ambient temperatures are encountered.

TIP Do not bring in unfiltered outside air. Place the controller in an enclosure to protect it from a corrosive atmosphere. Harmful contaminants or dirt could cause improper operation or damage to components. In extreme cases, you may need to use air conditioning to protect against heat build-up within the enclosure.

Master Control Relay

A hard-wired master control relay (MCR) provides a reliable means for emergency machine shutdown. Since the master control relay allows the placement of several emergency-stop switches in different locations, its installation is important from a safety standpoint. Overtravel limit switches or mushroom-head push buttons are wired in series so that when any of them opens, the master control relay is de-energized. This removes power to input and output device circuits. Refer to the figures on pages 2-10 and 2-11.

ATTENTION Never alter these circuits to defeat their function since serious injury and/or machine damage could result.

TIP If you are using an external dc power supply, interrupt the dc output side rather than the ac line side of the supply to avoid the additional delay of power supply turn-off.

The ac line of the dc output power supply should be fused.

Connect a set of master control relays in series with the dc power supplying the input and output circuits.

Place the main power disconnect switch where operators and maintenance personnel have quick and easy access to it. If you mount a disconnect switch inside the controller enclosure, place the switch operating handle on the outside of the enclosure, so that you can disconnect power without opening the enclosure.

Whenever any of the emergency-stop switches are opened, power to input and output devices should be removed.

When you use the master control relay to remove power from the external I/O circuits, power continues to be provided to the controller's power supply so that diagnostic indicators on the processor can still be observed.

The master control relay is not a substitute for a disconnect to the controller. It is intended for any situation where the operator must quickly de-energize I/O devices only. When inspecting or installing terminal connections, replacing output fuses, or working on equipment within the enclosure, use the disconnect to shut off power to the rest of the system.

TIP Do not control the master control relay with the controller. Provide the operator with the safety of a direct connection between an emergency-stop switch and the master control relay.

Use Emergency-Stop Switches

When using emergency-stop switches, adhere to the following points:

- Do not program emergency-stop switches in the controller program. Any emergency-stop switch should turn off all machine power by turning off the master control relay.
- Observe all applicable local codes concerning the placement and labeling of emergency-stop switches.
- Install emergency-stop switches and the master control relay in your system. Make certain that relay contacts have a sufficient rating for your application. Emergency-stop switches must be easy to reach.
- In the following illustration, input and output circuits are shown with MCR protection. However, in most applications, only output circuits require MCR protection.

The following illustrations show the Master Control Relay wired in a grounded system.

TIP In most applications input circuits do not require MCR protection; however, if you need to remove power from all field devices, you must include MCR contacts in series with input power wiring.

Schematic (Using IEC Symbols)

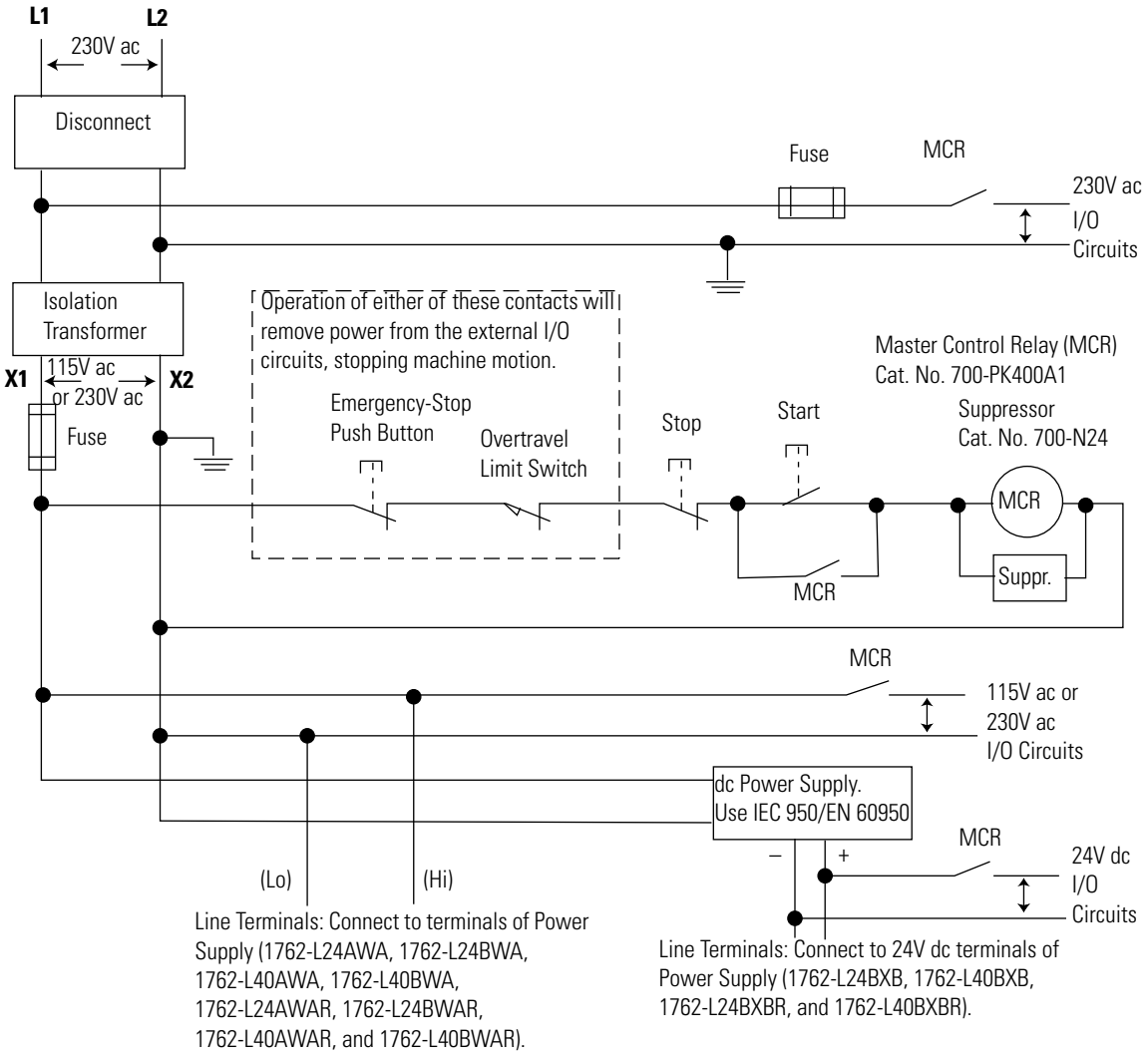

Schematic (Using ANSI/CSA Symbols)

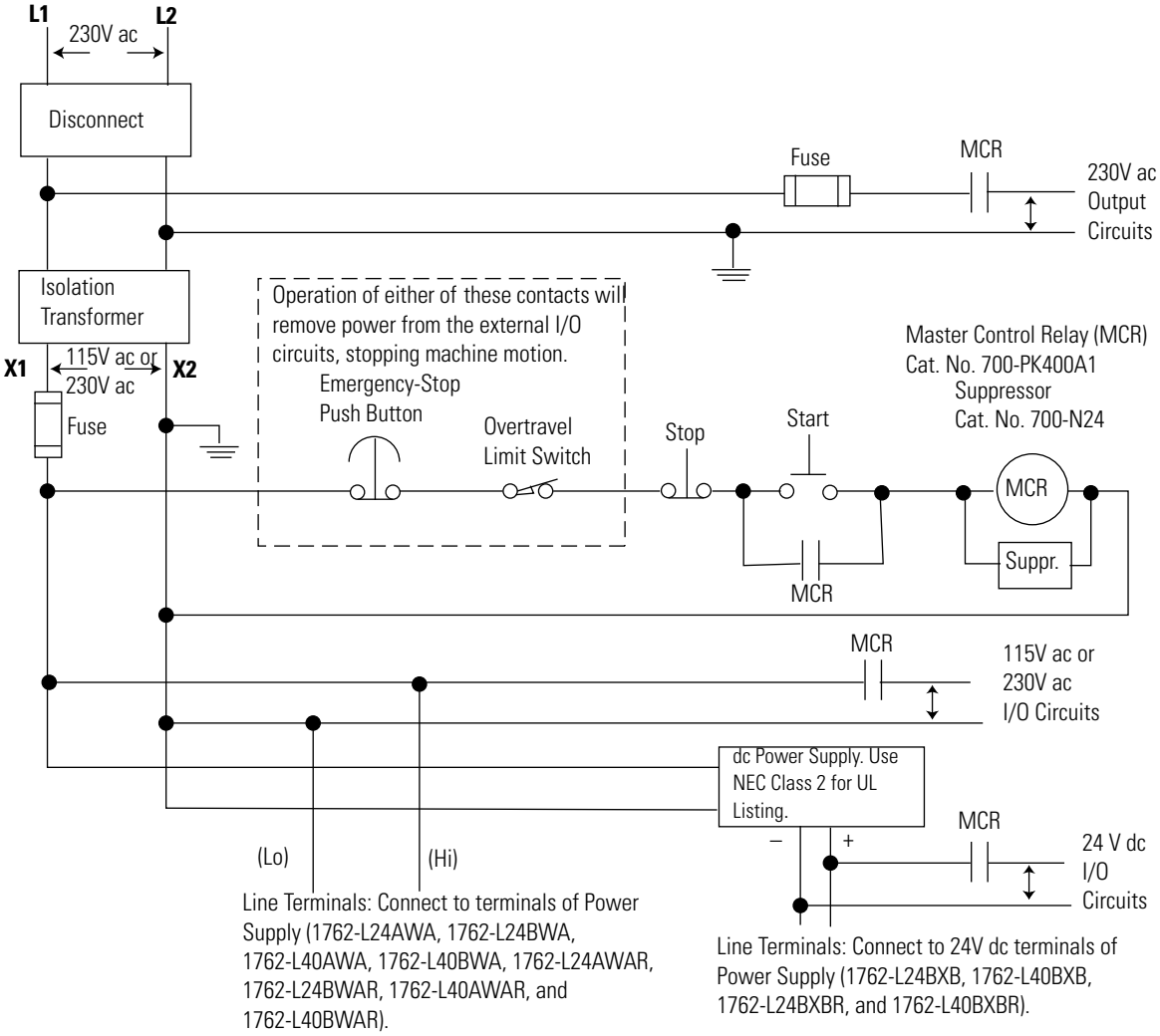

Install a Memory Module or Real-time Clock

1. Remove the memory module port cover.

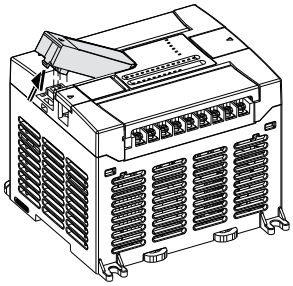

2. Align the connector on the memory module with the connector pins on the controller.

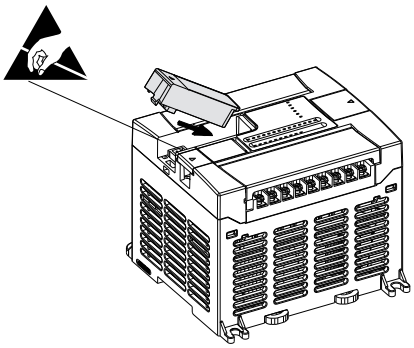

3. Firmly seat the memory module into the controller.

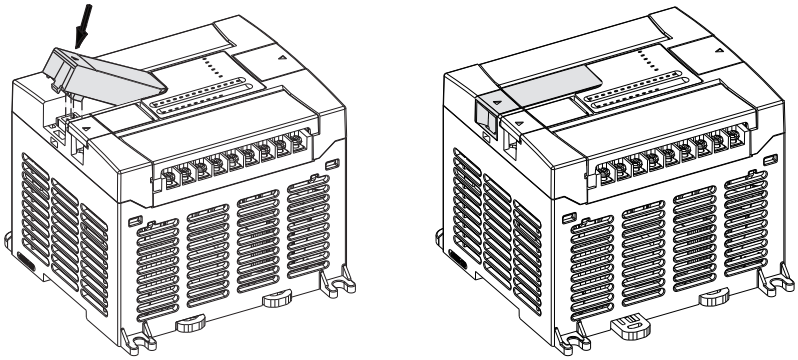

Controller Mounting Dimensions

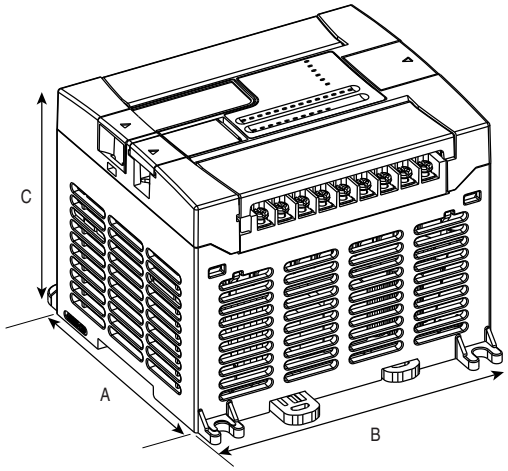

1762-L24AWA, 1762-L24BWA, 1762-L24BXB
1762-L24AWAR, 1762-L24BWAR, 1762-L24BXBR

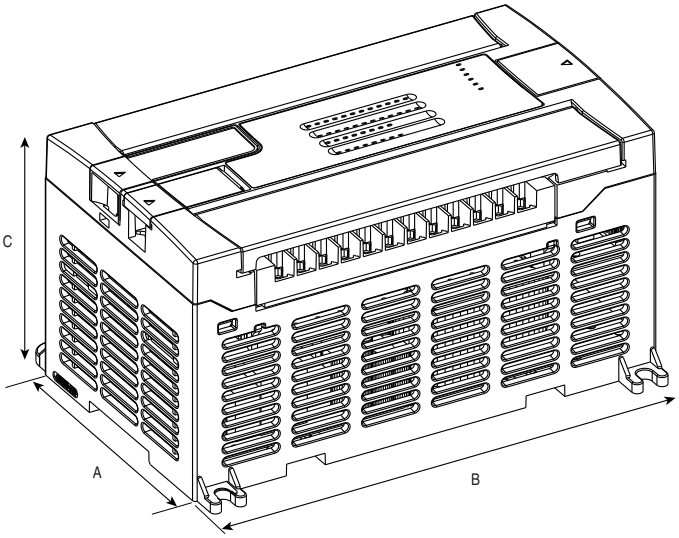

1762-L40AWA, 1762-L40BWA, 1762-L40BXB
1762-L40AWAR, 1762-L40BWAR, 1762-L40BXBR

Table 2.1 Controller Dimensions

Dimension	1762-L24AWA 1762-L24AWAR	1762-L24BWA 1762-L24BWAR	1762-L24BXB 1762-L24BXBR	1762-L40AWA 1762-L40AWAR	1762-L40BWA 1762-L40BWAR	1762-L40BXB 1762-L40BXBR
A	90 mm (3.5 in.)			90 mm (3.5 in.)		
B	110 mm (4.33 in.)			160 mm (6.30 in.)		
C	87 mm (3.43 in.)			87 mm (3.43 in.)		

Controller and Expansion I/O Spacing

The controller mounts horizontally, with the expansion I/O extending to the right of the controller. Allow 50 mm (2 in.) of space on all sides of the controller system for adequate ventilation. Maintain spacing from enclosure walls, wireways, and adjacent equipment, as shown below.

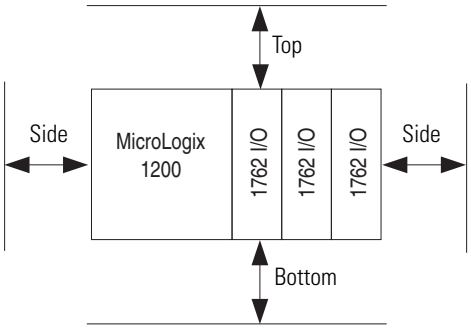

Mount the Controller

MicroLogix 1200 controllers are suitable for use in an industrial environment when installed in accordance with these instructions. Specifically, this equipment is intended for use in clean, dry environments (Pollution degree 2[1]) and to circuits not exceeding Over Voltage Category II[2] (IEC 60664-1).[3]

ATTENTION

Do not remove the protective debris shield until after the controller and all other equipment in the panel near the controller are mounted and wiring is complete. Once wiring is complete, remove protective debris shield. Failure to remove shield before operating can cause overheating.

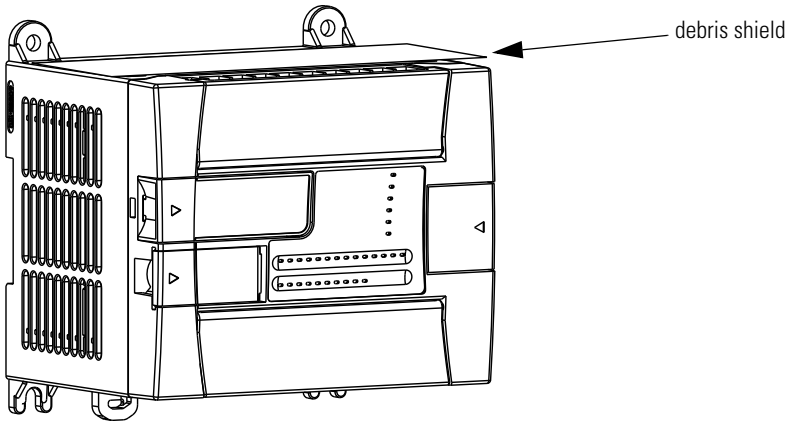

ATTENTION

Electrostatic discharge can damage semiconductor devices inside the controller. Do not touch the connector pins or other sensitive areas.

TIP

For environments with greater vibration and shock concerns, use the panel mounting method described on page 2-16, rather than DIN rail mounting.

(1) Pollution Degree 2 is an environment where, normally, only non-conductive pollution occurs except that occasionally a temporary conductivity caused by condensation shall be expected.

(2) Over Voltage Category II is the load level section of the electrical distribution system. At this level transient voltages are controlled and do not exceed the impulse voltage capability of the product's insulation.

(3) Pollution Degree 2 and Over Voltage Category II are International Electrotechnical Commission (IEC) designations.

DIN Rail Mounting

The maximum extension of the latch is 14 mm (0.55 in.) in the open position. A flat-blade screwdriver is required for removal of the controller. The controller can be mounted to EN50022-35x7.5 or EN50022-35x15 DIN rails. DIN rail mounting dimensions are shown below.

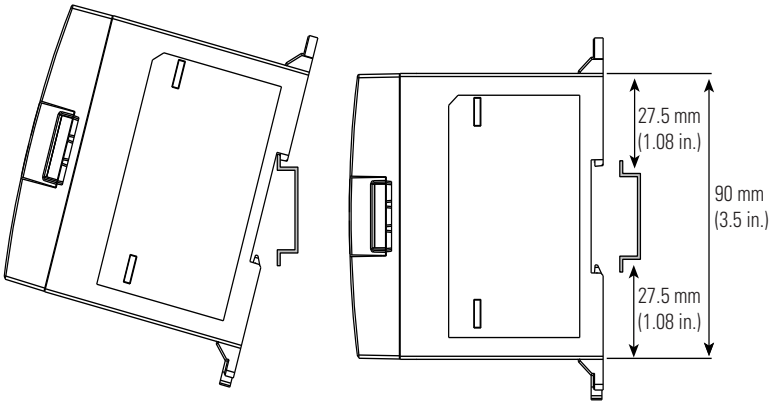

To install your controller on the DIN rail:

1. Mount your DIN rail. (Make sure that the placement of the controller on the DIN rail meets the recommended spacing requirements, see Controller and Expansion I/O Spacing on page 2-13. Refer to the mounting template inside the back cover of this document.)
2. Close the DIN latch, if it is open.
3. Hook the top slot over the DIN rail.
4. While pressing the controller down against the top of the rail, snap the bottom of the controller into position.
5. Leave the protective debris shield attached until you are finished wiring the controller and any other devices.

To remove your controller from the DIN rail:

1. Place a flat-blade screwdriver in the DIN rail latch at the bottom of the controller.
2. Holding the controller, pry downward on the latch until the latch locks in the open position.
3. Repeat steps 1 and 2 for the second DIN rail latch.
4. Unhook the top of the DIN rail slot from the rail.

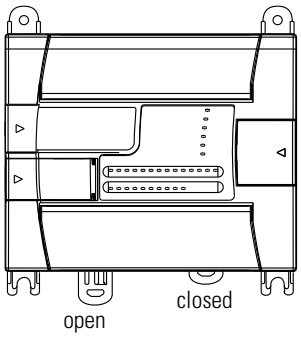

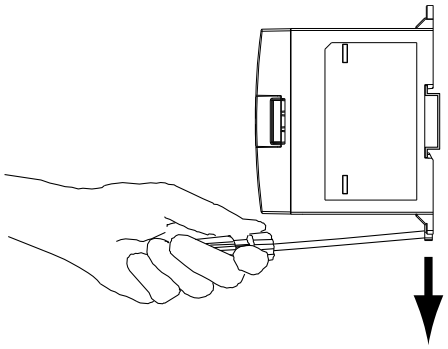

Panel Mounting

Mount to panel using #8 or M4 screws. To install your controller using mounting screws:

1. Remove the mounting template from inside the back cover of the MicroLogix 1200 Programmable Controllers Installation Instructions, publication 1762-IN006.
2. Secure the template to the mounting surface. (Make sure your controller is spaced properly. See Controller and Expansion I/O Spacing on page 2-13.)
3. Drill holes through the template.
4. Remove the mounting template.
5. Mount the controller.
6. Leave the protective debris shield in place until you are finished wiring the controller and any other devices.

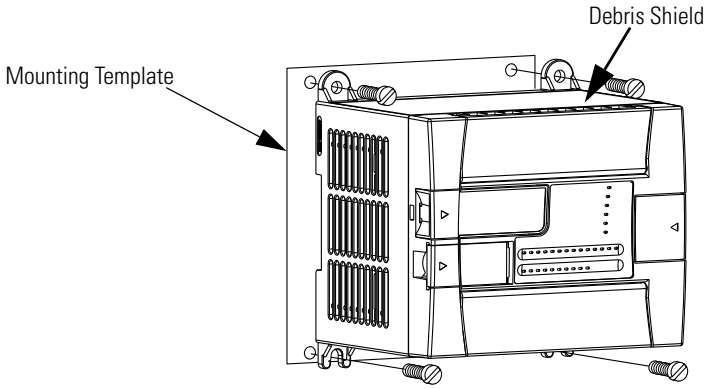

1762 Expansion I/O Dimensions

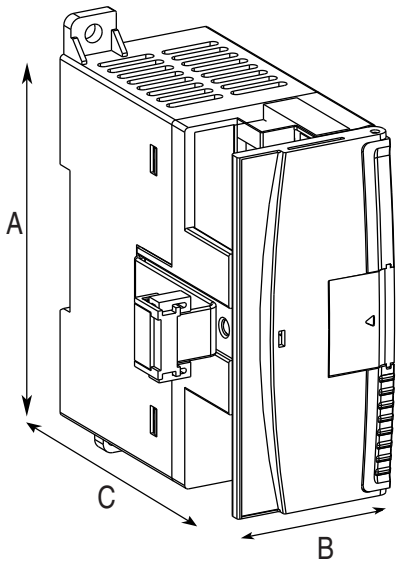

Dimension	Expansion I/O Module
A	90 mm (3.5 in.)
B	40 mm (1.57 in.)
C	87 mm (3.43 in.)

Mount 1762 Expansion I/O

ATTENTION

During panel or DIN rail mounting of all devices, be sure that all debris (metal chips, wire stands) is kept from falling into the module. Debris that falls into the module could cause damage when the module is under power.

DIN Rail Mounting

The module can be mounted using the following DIN rails:

- 35 x 7.5 mm (EN 50 022 - 35 x 7.5), or
- 35 x 15 mm (EN 50 022 - 35 x 15).

Before mounting the module on a DIN rail, close the DIN rail latch. Press the DIN rail mounting area of the module against the DIN rail. The latch momentarily opens and locks into place.

Use DIN rail end anchors (Allen-Bradley part number 1492-EA35 or 1492-EAH35) for vibration or shock environments. The following illustration shows the location of the end anchors.

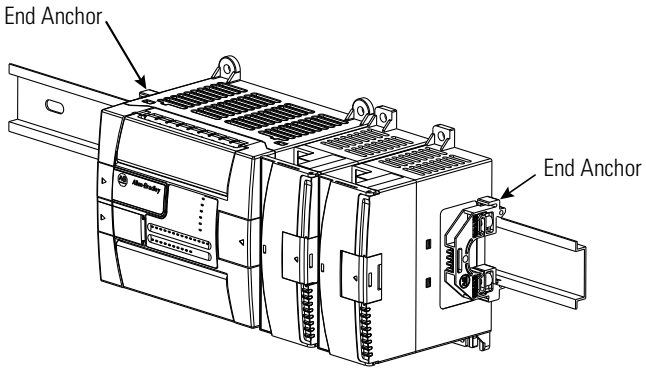

TIP 1762 expansion I/O must be mounted horizontally as illustrated.

TIP For environments with greater vibration and shock concerns, use the panel mounting method described below, instead of DIN rail mounting.

Mount on Panel

Use the dimensional template shown below to mount the module. The preferred mounting method is to use two M4 or #8 panhead screws per module. Mounting screws are required on every module.

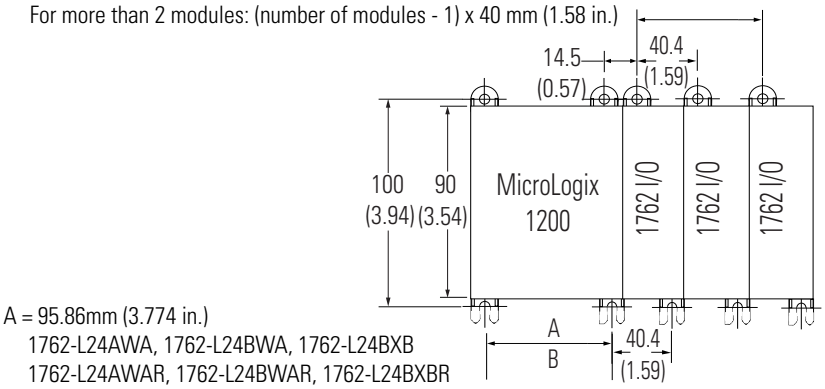

A = 95.86mm (3.774 in.)
1762-L24AWA, 1762-L24BWA, 1762-L24BXB
1762-L24AWAR, 1762-L24BWAR, 1762-L24BXBR

B = 145.8 mm (5.739 in.)
1762-L40AWA, 1762-L40BWA, 1762-L40BXB
1762-L40AWAR, 1762-L40BWAR, 1762-L40BXBR

NOTE: All dimensions are in mm (inches).
Hole spacing tolerance: ±0.4 mm (0.016 in.).

Connect Expansion I/O

The expansion I/O module is attached to the controller or another I/O module by means of a flat ribbon cable after mounting, as shown below.

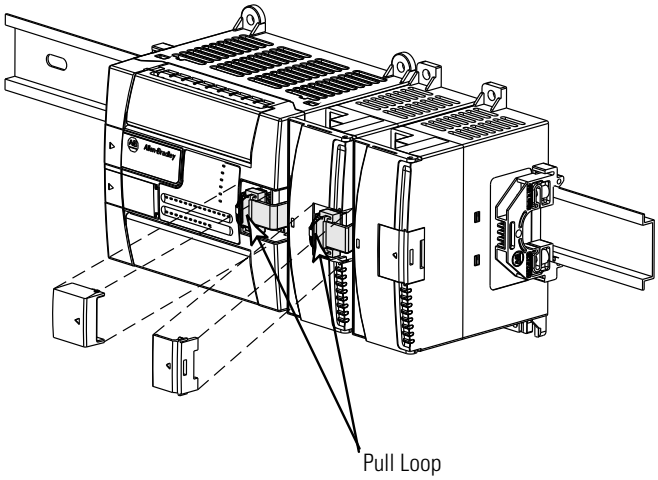

TIP Use the pull loop on the connector to disconnect modules. Do not pull on the ribbon cable.

TIP Up to six expansion I/O modules can be connected to a controller depending upon the power supply loading.

ATTENTION

Remove power before removing or inserting an I/O module. When you remove or insert a module with power applied, an electrical arc may occur. An electrical arc can cause personal injury or property damage by:

- sending an erroneous signal to your system's field devices, causing the controller to fault
- causing an explosion in a hazardous environment

Electrical arcing causes excessive wear to contacts on both the module and its mating connector. Worn contacts may create electrical resistance, reducing product reliability.

WARNING

EXPLOSION HAZARD

In Class I, Division 2 applications, the bus connector must be fully seated and the bus connector cover must be snapped in place.

In Class I, Division 2 applications, all modules must be mounted in direct contact with each other as shown on page 2-19. If DIN rail mounting is used, an end stop must be installed ahead of the controller and after the last 1762 I/O module.

Wire Your Controller

This chapter describes how to wire your controller and expansion I/O. Topics include:

- wire requirements
- using surge suppressors
- grounding the controller
- wiring diagrams
- sinking and sourcing wiring diagrams
- controller I/O wiring
- expansion I/O wiring

Wire Requirements

ATTENTION

Before you install and wire any device, disconnect power to the controller system.

ATTENTION

Calculate the maximum possible current in each power and common wire. Observe all electrical codes dictating the maximum current allowable for each wire size. Current above the maximum ratings may cause wiring to overheat, which can cause damage.

United States Only: If the controller is installed within a potentially hazardous environment, all wiring must comply with the requirements stated in the National Electrical Code 501-4 (b).

- Allow for at least 50 mm (2 in) between I/O wiring ducts or terminal strips and the controller.
- Route incoming power to the controller by a path separate from the device wiring. Where paths must cross, their intersection should be perpendicular.

TIP Do not run signal or communication wiring and power wiring in the same conduit. Wires with different signal characteristics should be routed by separate paths.

- Separate wiring by signal type. Bundle wiring with similar electrical characteristics together.
- Separate input wiring from output wiring.
- Label wiring to all devices in the system. Use tape, shrink-tubing, or other dependable means for labeling purposes. In addition to labeling, use colored insulation to identify wiring based on signal characteristics. For example, you may use blue for dc wiring and red for ac wiring.

Table 3.1 Wire Requirements

Wire Type		Wire Size (2 wire maximum per terminal screw)(1)
Solid	Cu-90 °C (194 °F)	#14 to #22 AWG
Stranded	Cu-90 °C (194 °F)	#16 to #22 AWG

(1) Wiring torque = 0.791 Nm (7 lb-in) rated

Wire without Spade Lugs

When wiring without spade lugs, it is recommended to keep the finger-safe covers in place. Loosen the terminal screw and route the wires through the opening in the finger-safe cover. Tighten the terminal screw making sure the pressure plate secures the wire.

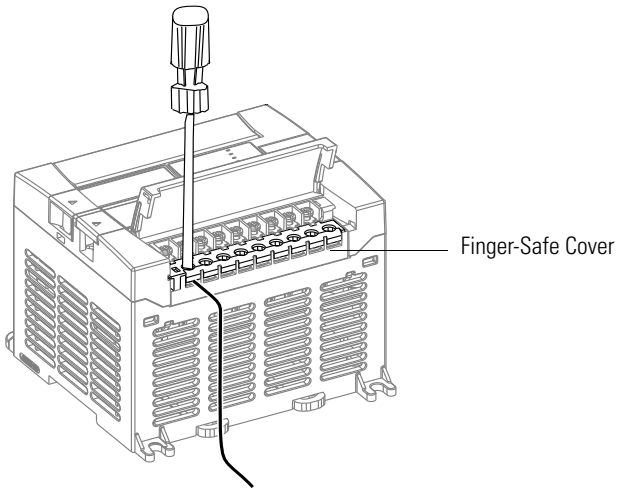

Wire with Spade Lugs

The diameter of the terminal screw head is 5.5 mm (0.220 in.). The input and output terminals of the MicroLogix 1200 controller are designed for a 6.35 mm (0.25 in.) wide spade (standard for #6 screw for up to 14 AWG) or a 4 mm (metric #4) fork terminal.

When using spade lugs, use a small, flat-blade screwdriver to pry the finger-safe cover from the terminal blocks as shown below. Then loosen the terminal screw.

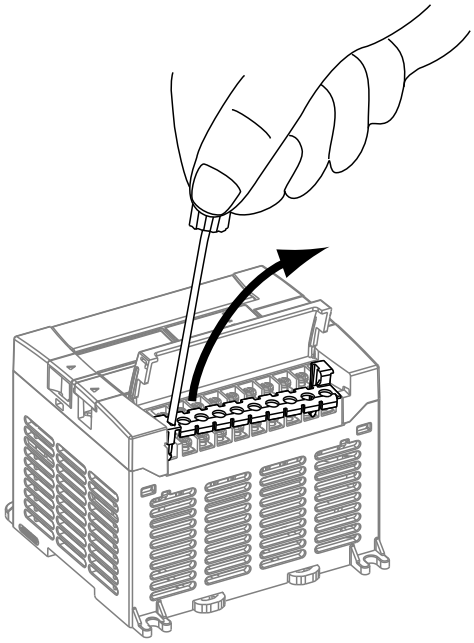

Use Surge Suppressors

Because of the potentially high current surges that occur when switching inductive load devices, such as motor starters and solenoids, the use of some type of surge suppression to protect and extend the operating life of the controllers output contacts is required. Switching inductive loads without surge suppression can significantly reduce the life expectancy of relay contacts. By adding a suppression device directly across the coil of an inductive device, you prolong the life of the output or relay contacts. You also reduce the effects of voltage transients and electrical noise from radiating into adjacent systems.

The following diagram shows an output with a suppression device. We recommend that you locate the suppression device as close as possible to the load device.

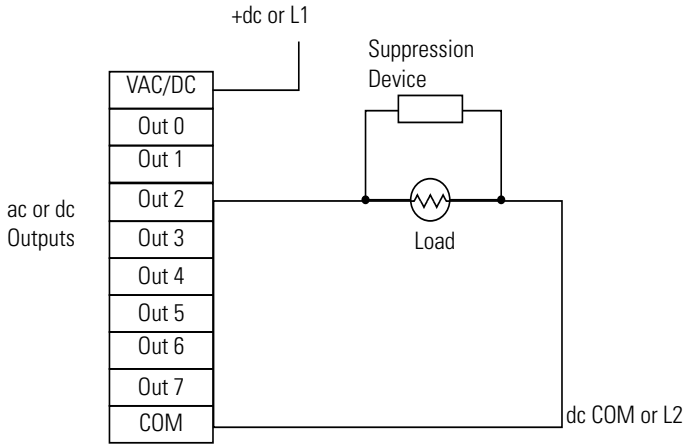

If the outputs are dc, we recommend that you use an 1N4004 diode for surge suppression, as shown below. For inductive dc load devices, a diode is suitable. A 1N4004 diode is acceptable for most applications. A surge suppressor can also be used. See Table 3.2 for recommended suppressors. As shown below, these surge suppression circuits connect directly across the load device.

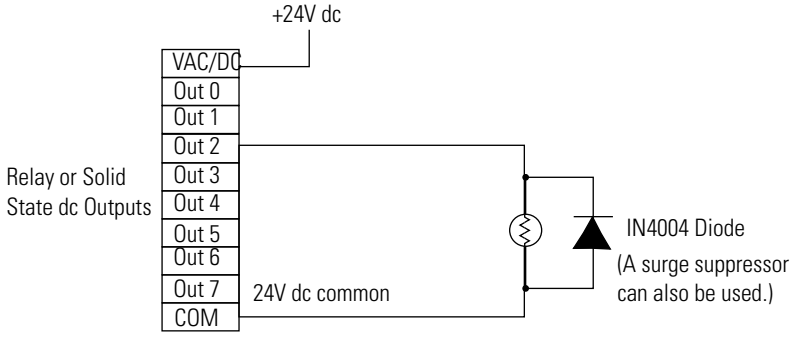

Suitable surge suppression methods for inductive ac load devices include a varistor, an RC network, or an Allen-Bradley surge suppressor, all shown below. These components must be appropriately rated to suppress the switching transient characteristic of the particular inductive device. See the table on page 3-5 for recommended suppressors.

Surge Suppression for Inductive ac Load Devices

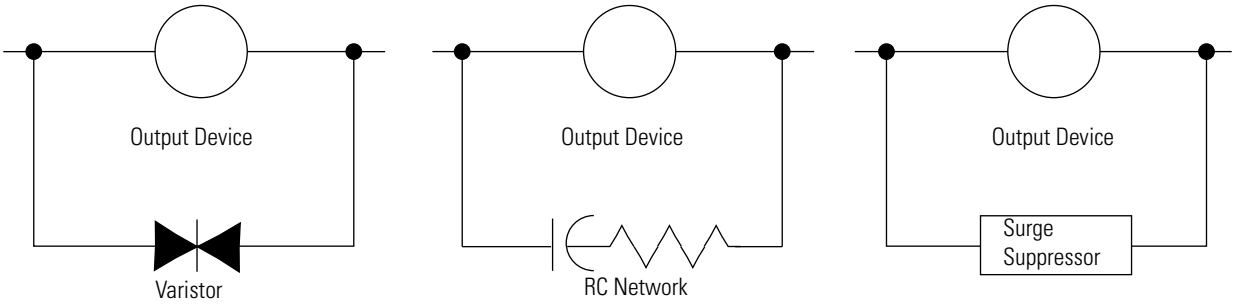

Recommended Surge Suppressors

Use the Allen-Bradley surge suppressors shown in the following table for use with relays, contactors, and starters.

Table 3.2 Recommended Surge Suppressors

Device	Coil Voltage	Suppressor Catalog Number
Bulletin 509 Motor Starter Bulletin 509 Motor Starter	120V ac 240V ac	599-K04(1) 599-KA04(1)
Bulletin 100 Contactor Bulletin 100 Contactor	120V ac 240V ac	199-FSMA1(2) 199-FSMA2(2)
Bulletin 709 Motor Starter	120V ac	1401-N10(2)
Bulletin 700 Type R, RM Relays	ac coil	None Required
Bulletin 700 Type R Relay Bulletin 700 Type RM Relay	12V dc 12V dc	199-FSMA9
Bulletin 700 Type R Relay Bulletin 700 Type RM Relay	24V dc 24V dc	199-FSMA9
Bulletin 700 Type R Relay Bulletin 700 Type RM Relay	48V dc 48V dc	199-FSMA9
Bulletin 700 Type R Relay Bulletin 700 Type RM Relay	115-125V dc 115-125V dc	199-FSMA10
Bulletin 700 Type R Relay Bulletin 700 Type RM Relay	230-250V dc 230-250V dc	199-FSMA11
Bulletin 700 Type N, P, or PK Relay	150V max, ac or dc	700-N24(2)
Miscellaneous electromagnetic devices limited to 35 sealed VA	150V max, ac or dc	700-N24(2)

(1) Varistor – Not recommended for use on relay outputs.
(2) RC Type – Do not use with Triac outputs.

Ground the Controller

In solid-state control systems, grounding and wire routing helps limit the effects of noise due to electromagnetic interference (EMI). Run the ground connection from the ground screw of the controller to the ground bus prior to connecting any devices. Use AWG #14 wire. For AC-powered controllers, this connection must be made for safety purposes.

ATTENTION

All devices connected to the RS-232 channel must be referenced to controller ground, or be floating (not referenced to a potential other than ground). Failure to follow this procedure may result in property damage or personal injury.

- For 1762-L24BWA, 1762-L40BWA, 1762-L24BWAR, and 1762-L40BWAR controllers: The COM of the sensor supply is also connected to chassis ground internally. The 24V dc sensor power source should not be used to power output circuits. It should only be used to power input devices.
- For 1762-L24BXB, 1762-L40BXB, 1762-L24BXBR, and 1762-L40BXBR controllers: The VDC NEUT or common terminal of the power supply is also connected to chassis ground internally.

This product is intended to be mounted to a well grounded mounting surface such as a metal panel. Refer to the Industrial Automation Wiring and Grounding Guidelines, publication 1770-4.1, for additional information. Additional grounding connections from the mounting tab or DIN rail, if used, are not required unless the mounting surface cannot be grounded.

TIP

Use all four mounting positions for panel mounting installation.

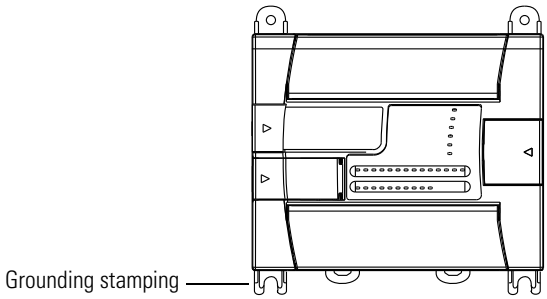

ATTENTION

Remove the protective debris strip before applying power to the controller. Failure to remove the strip may cause the controller to overheat.

Wiring Diagrams

The following illustrations show the wiring diagrams for the MicroLogix 1200 controllers. Controllers with dc inputs can be wired as either sinking or sourcing inputs. (Sinking and sourcing does not apply to ac inputs.) Refer to Sinking and Sourcing Wiring Diagrams on page 3-12

The controller terminal block layouts are shown below. The shading on the labels indicates how the terminals are grouped. A detail of the groupings is shown in the table following the terminal block layouts.

TIP

This symbol denotes a protective earth ground terminal which provides a low impedance path between electrical circuits and earth for safety purposes and provides noise immunity improvement. This connection must be made for safety purposes on ac-powered controllers.

This symbol denotes a functional earth ground terminal which provides a low impedance path between electrical circuits and earth for non-safety purposes, such as noise immunity improvement.

Terminal Block Layouts

Figure 3.1 1762-L24AWA and 1762-L24AWAR

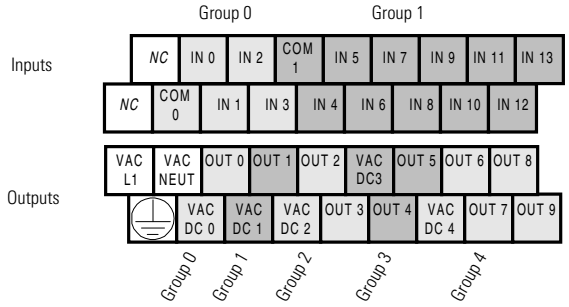

Figure 3.2 1762-L24BWA and 1762-L24BWAR

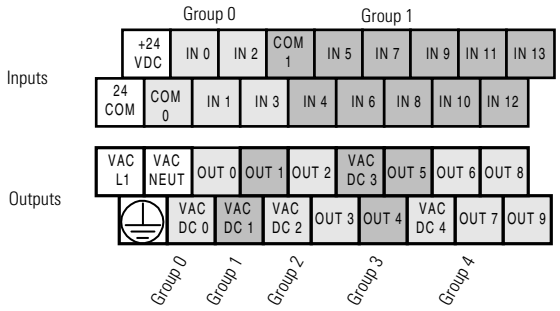

ATTENTION

The 24V dc sensor supply of the 1762-L24BWA and 1762-L24BWAR should not be used to power output circuits. It should only be used to power input devices (for example sensors and switches). See Master Control Relay on page 2-8 for information on MCR wiring in output circuits.

Figure 3.3 1762-L24BXB and 1762-L24BXBR

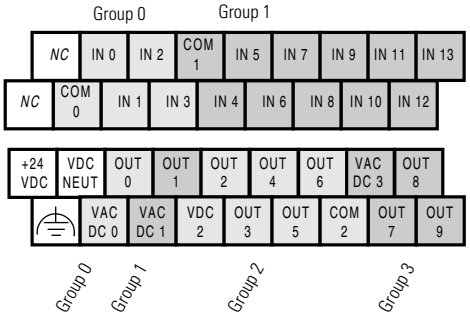

Figure 3.4 1762-L40AWA and 1762-L40AWAR

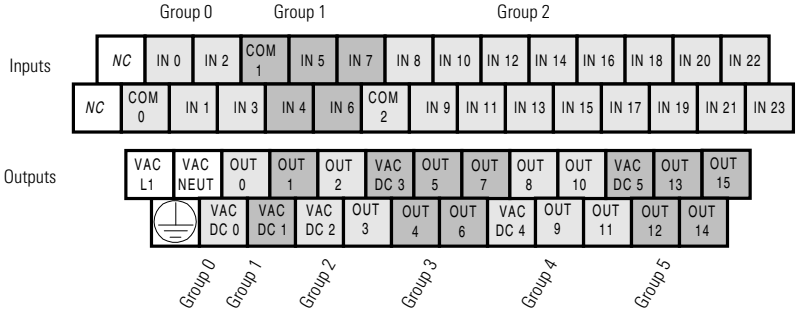

Figure 3.5 1762-L40BWA and 1762-L40BWAR

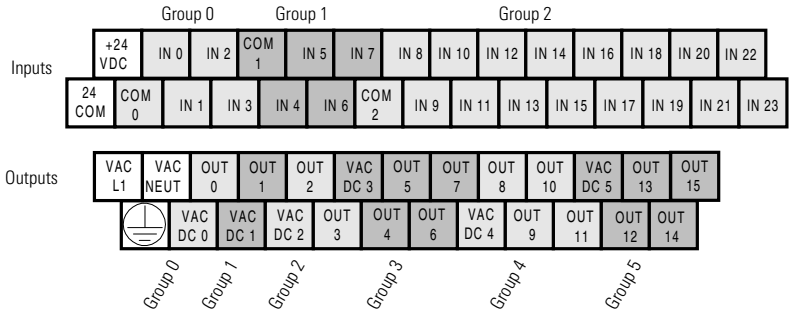

ATTENTION

The 24V dc sensor supply of the 1762-L40BWA and 1762-L40BWAR should not be used to power output circuits. It should only be used to power input devices (for example sensors and switches). See Master Control Relay on page 2-8 for information on MCR wiring in output circuits.

Figure 3.6 1762-L40BXB and 1762-L40BXBR

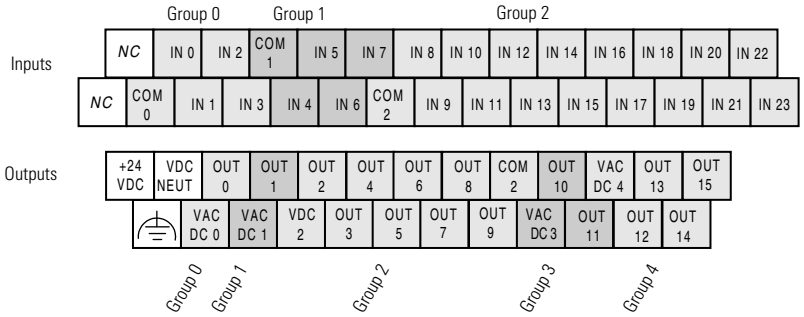

Terminal Groupings

Table 3.3 Input Terminal Grouping

Controller	Inputs		
	Input Group	**Common Terminal**	**Input Terminal**
1762-L24AWA 1762-L24AWAR	Group 0	AC COM 0	I/0 through I/3
	Group 1	AC COM 1	I/4 through I/13
1762-L24BWA 1762-L24BWAR	Group 0	DC COM 0	I/0 through I/3
	Group 1	DC COM 1	I/4 through I/13
1762-L24BXB 1762-L24BXBR	Group 0	DC COM 0	I/0 through I/3
	Group 1	DC COM 1	I/4 through I/13
1762-L40AWA 1762-L40AWAR	Group 0	AC COM 0	I/0 through I/3
	Group 1	AC COM 1	I/4 through I/7
	Group 2	AC COM 2	I/8 through I/23

Table 3.3 Input Terminal Grouping

Controller	Inputs		
	Input Group	**Common Terminal**	**Input Terminal**
1762-L40BWA 1762-L40BWAR	Group 0	DC COM 0	I/0 through I/3
	Group 1	DC COM 1	I/4 through I/7
	Group 2	DC COM 2	I/8 through I/23
1762-L40BXB **1762-L40BXBR**	Group 0	DC COM 0	I/0 through I/3
	Group 1	DC COM 1	I/4 through I/7
	Group 2	DC COM 2	I/8 through I/23

Table 3.4 Output Terminal Grouping

Controller	Outputs			
	Output Group	**Voltage Terminal**	**Output Terminal**	**Description**
1762-L24AWA **1762-L24AWAR**	Group 0	VAC/VDC 0	O/0	Isolated Relay outputs
	Group 1	VAC/VDC 1	O/1	
	Group 2	VAC/VDC 2	O/2 through O/3	
	Group 3	VAC/VDC 3	O4 through O/5	
	Group 4	VAC/VDC 4	O/6 through O/9	
1762-L24BWA **1762-L24BWAR**	Group 0	VAC/VDC 0	O/0	Isolated Relay outputs
	Group 1	VAC/VDC 1	O/1	
	Group 2	VAC/VDC 2	O/2 through O/3	
	Group 3	VAC/VDC 3	O/4 through O/5	
	Group 4	VAC/VDC 4	O/6 through O/9	
1762-L24BXB **1762-L24BXBR**	Group 0	VAC/VDC 0	O/0	Isolated Relay outputs
	Group 1	VAC/VDC 1	O/1	
	Group 2	VDC 2, VDC COM 2	O/2 through O/6	Isolated FET outputs
	Group 3	VAC/VDC 3	O/7 through O/9	Isolated Relay outputs
1762-L40AWA **1762-L40AWAR**	Group 0	VAC/VDC 0	O/0	Isolated Relay outputs
	Group 1	VAC/VDC 1	O/1	
	Group 2	VAC/VDC 2	O/2 through O/3	
	Group 3	VAC/VDC 3	O/4 through O/7	
	Group 4	VAC/VDC 4	O/8 through O/11	
	Group 5	VAC/VDC 5	O/12 through O/15	
1762-L40BWA **1762-L40BWAR**	Group 0	VAC/VDC 0	O/0	Isolated Relay outputs
	Group 1	VAC/VDC 1	O/1	
	Group 2	VAC/VDC 2	O/2 through O/3	
	Group 3	VAC/VDC 3	O/4 through O/7	
	Group 4	VAC/VDC 4	O/8 through O/11	
	Group 5	VAC/VDC 5	O/12 through O/15	

Table 3.4 Output Terminal Grouping

Controller	Outputs			
	Output Group	**Voltage Terminal**	**Output Terminal**	**Description**
1762-L40BXB 1762-L40BXBR	Group 0	VAC/VDC 0	O/0	Isolated Relay outputs
	Group 1	VAC/VDC 1	O/1	
	Group 2	VDC 2, VDC COM 2	O/2 through O/9	Isolated FET outputs
	Group 3	VAC/VDC 3	O/10 through O/11	Isolated Relay outputs
	Group 4	VAC/VDC 4	O/12 through O/15	

Sinking and Sourcing Wiring Diagrams

Any of the MicroLogix 1200 DC embedded input groups can be configured as sinking or sourcing depending on how the DC COM is wired on the group. Refer to pages 3-13 through 3-17 for sinking and sourcing wiring diagrams.

Type	Definition
Sinking Input	The input energizes when high-level voltage is applied to the input terminal (active high). Connect the power supply VDC (-) to the input group's COM terminal.
Sourcing Input	The input energizes when low-level voltage is applied to the input terminal (active low). Connect the power supply VDC (+) to the input group's COM terminal.

ATTENTION

The 24V dc sensor power source must not be used to power output circuits. It should only be used to power input devices (for example sensors and switches). See Master Control Relay on page 2-8 for information on MCR wiring in output circuits.

1762-L24AWA, 1762-L24BWA, 1762-L24BXB, 1762-L24AWAR, 1762-L24BWAR and 1762-L24BXBR Wiring Diagrams

TIP

In the following diagrams, lower case alphabetic subscripts are appended to common-terminal connections to indicate that different power sources may be used for different isolated groups, if desired.

Figure 3.7 1762-L24AWA and 1762-L24AWAR Input Wiring Diagram (1)

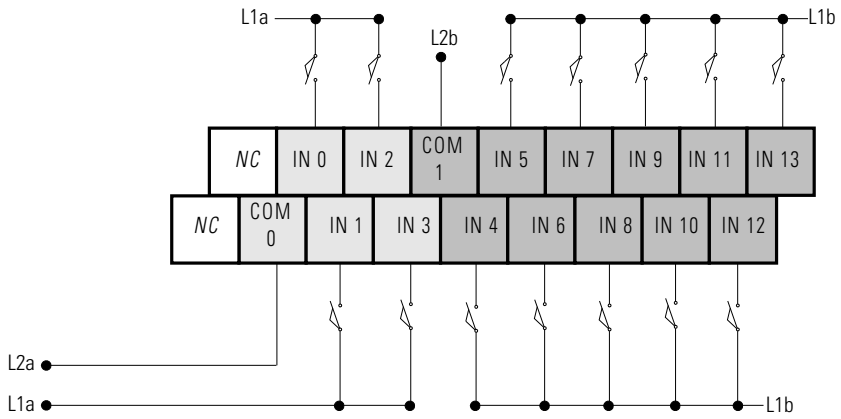

(1) "NC" terminals are not intended for use as connection points.

Figure 3.8 1762-L24BWA and 1762-L24BWAR Sinking Input Wiring Diagram

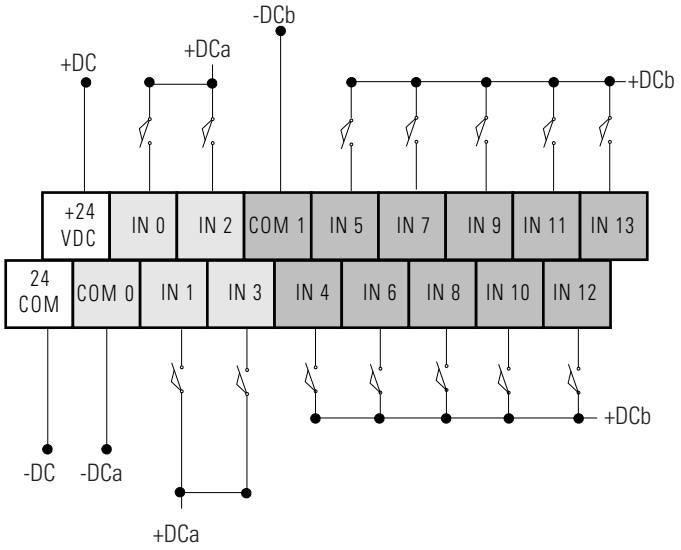

Figure 3.9 1762-L24BWA and 1762-L24BWAR Sourcing Input Wiring Diagram

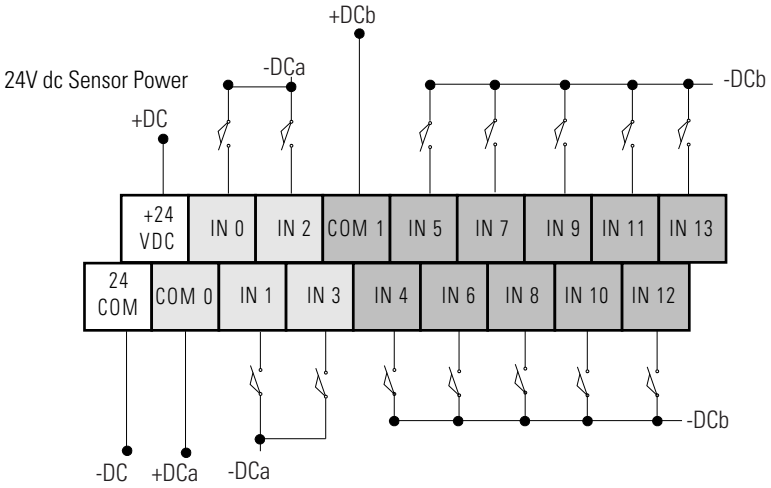

Figure 3.10 1762-L24BXB and 1762-L24BXBR Sinking Input Wiring Diagram

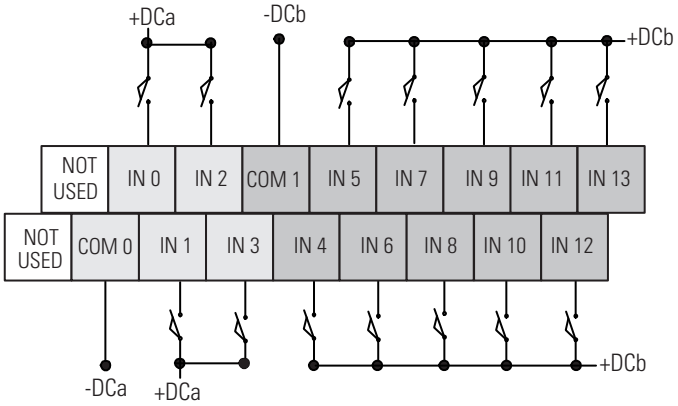

Figure 3.11 1762-L24BXB and 1762-L24BXBR Sourcing Input Wiring Diagram

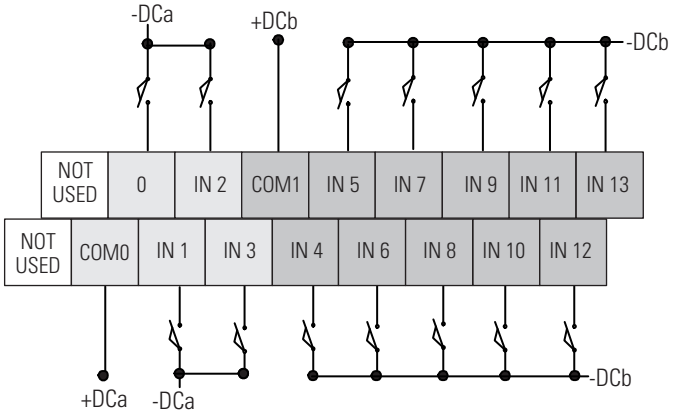

Figure 3.12 1762-L24AWA, 1762-L24BWA, 1762-L24AWAR, and 1762-L24BWAR Output Wiring Diagram

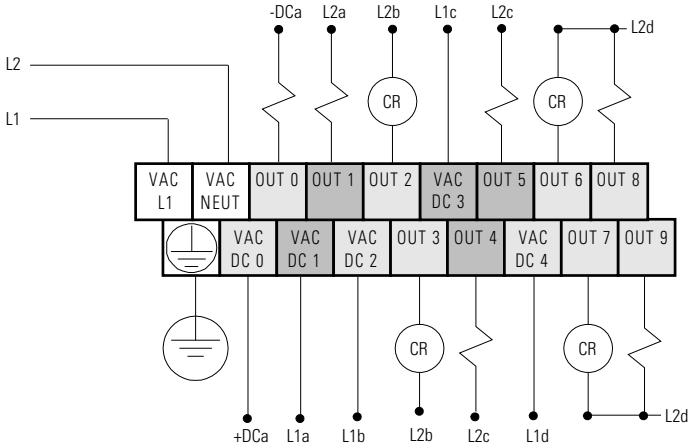

Figure 3.13 1762-L24BXB and 1762-L24BXBR Output Wiring Diagram

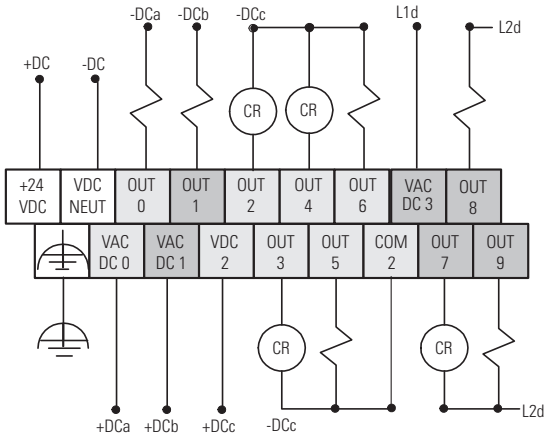

1762-L40AWA, 1762-L40BWA, 1762-L40BXB, 1762-L40AWAR, 1762-L40BWAR and 1762-L40BXBR Wiring Diagrams

Figure 3.14 1762-L40AWA and 1762-L40AWAR Input Wiring Diagram

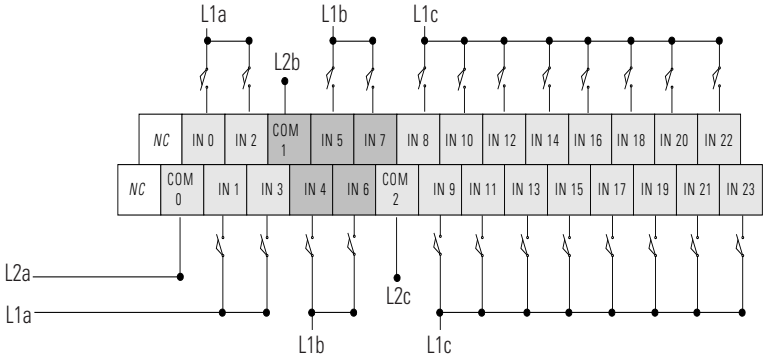

Figure 3.15 1762-L40BWA and 1762-L40BWAR Sinking Input Wiring Diagram

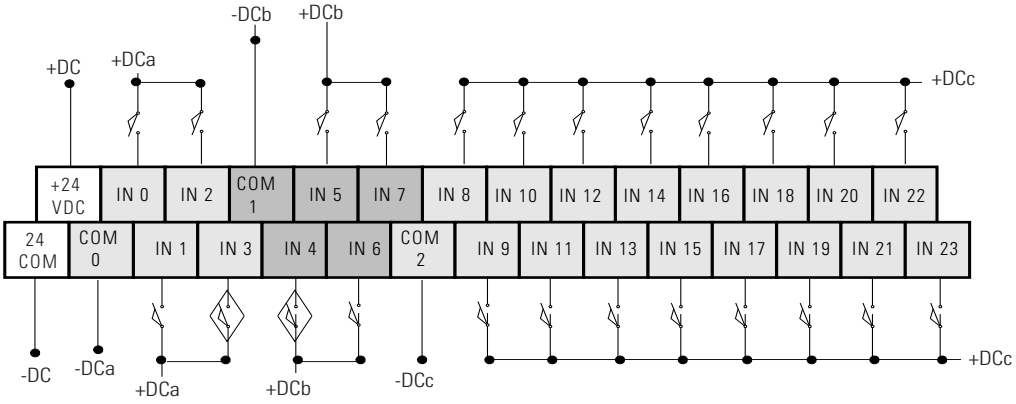

Figure 3.16 1762-L40BWA and 1762-L40BWAR Sourcing Input Wiring Diagram

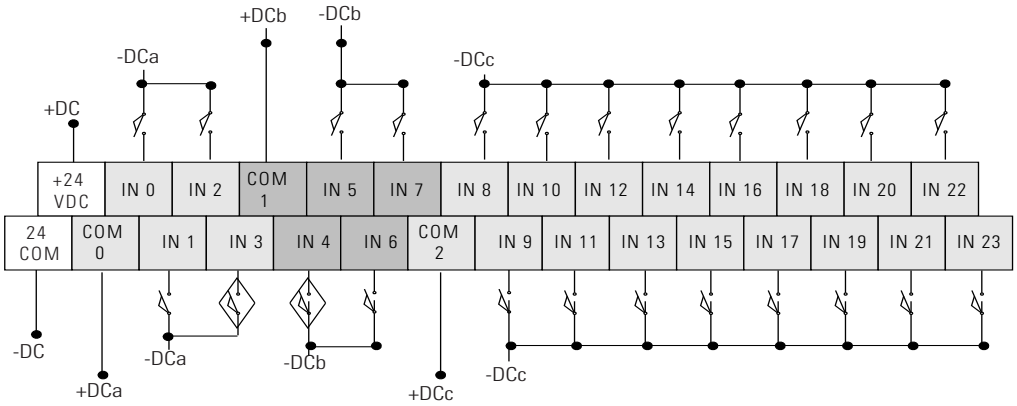

Figure 3.17 1762-L40BXB and 1762-L40BXBR Sinking Input Wiring Diagram

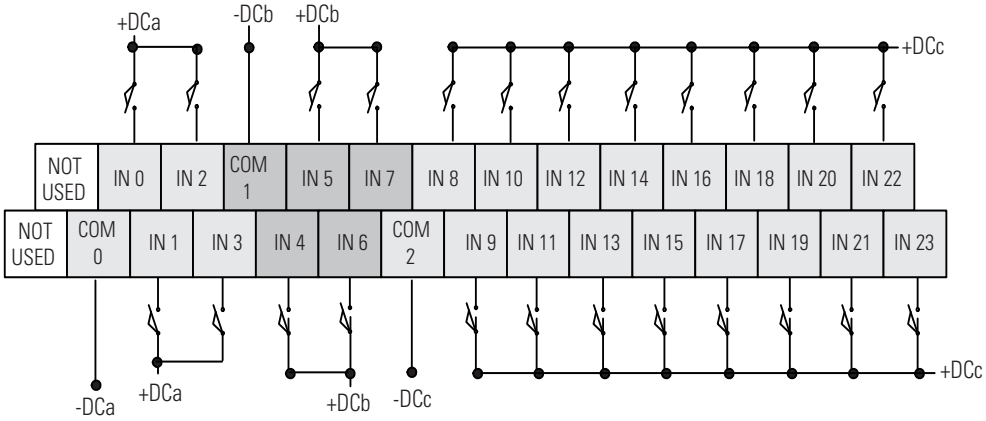

Figure 3.18 1762-L40BXB and 1762-L40BXBR Sourcing Input Wiring Diagram

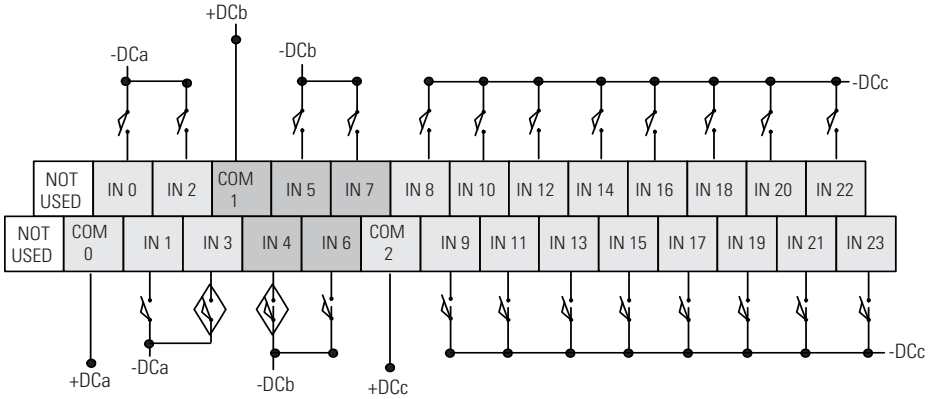

Figure 3.19 1762-L40AWA, 1762-L40BWA, 1762-L40AWAR, and 1762-L40BWAR Output Wiring Diagram

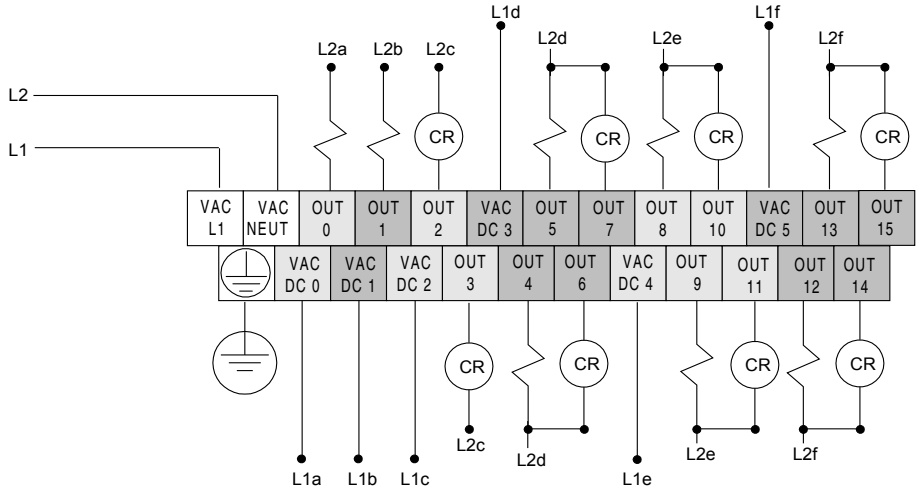

Figure 3.20 1762-L40BXB and 1762-L40BXBR Output Wiring Diagram

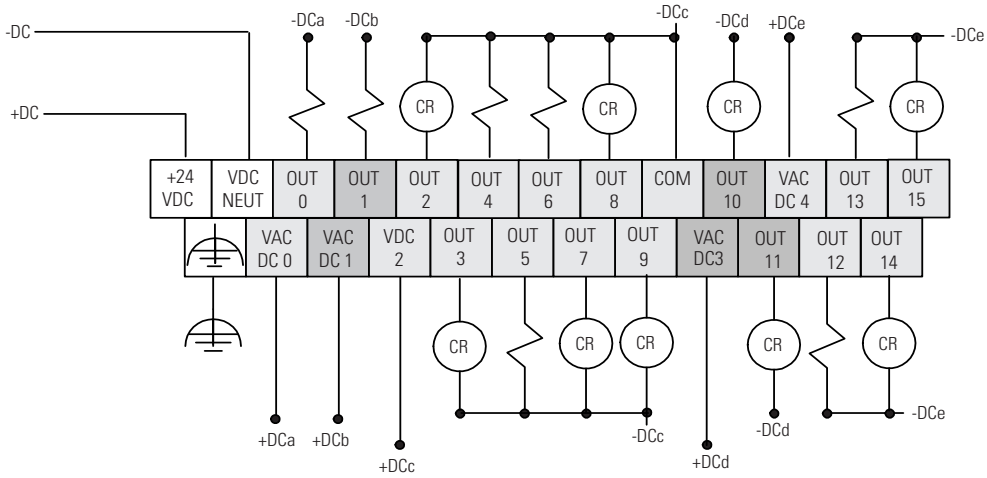

Controller I/O Wiring

Minimize Electrical Noise

Because of the variety of applications and environments where controllers are installed and operating, it is impossible to ensure that all environmental noise will be removed by input filters. To help reduce the effects of environmental noise, install the MicroLogix 1200 system in a properly rated (NEMA) enclosure. Make sure that the MicroLogix 1200 system is properly grounded.

A system may malfunction due to a change in the operating environment after a period of time. We recommend periodically checking system operation, particularly when new machinery or other noise sources are installed near the Micrologix 1200 system.

Expansion I/O Wiring

The following sections show the discrete and analog expansion I/O wiring diagrams.

Discrete Wiring Diagrams

Figure 3.21 1762-IA8 Wiring Diagram

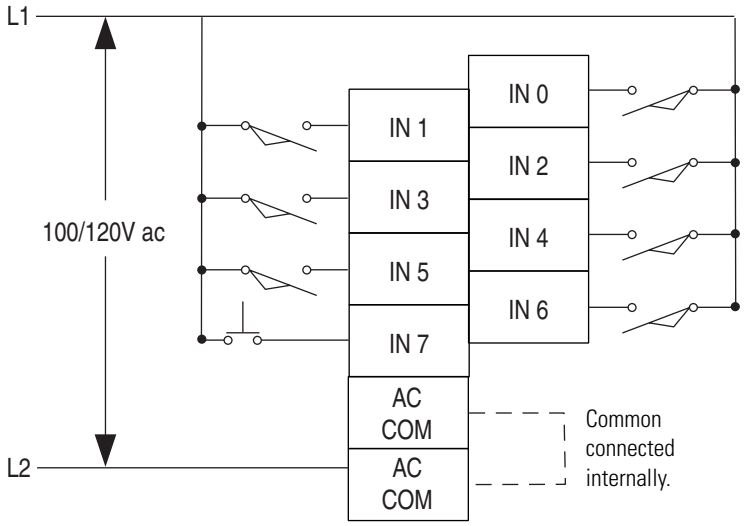

Figure 3.22 1762-IQ8 Wiring Diagram

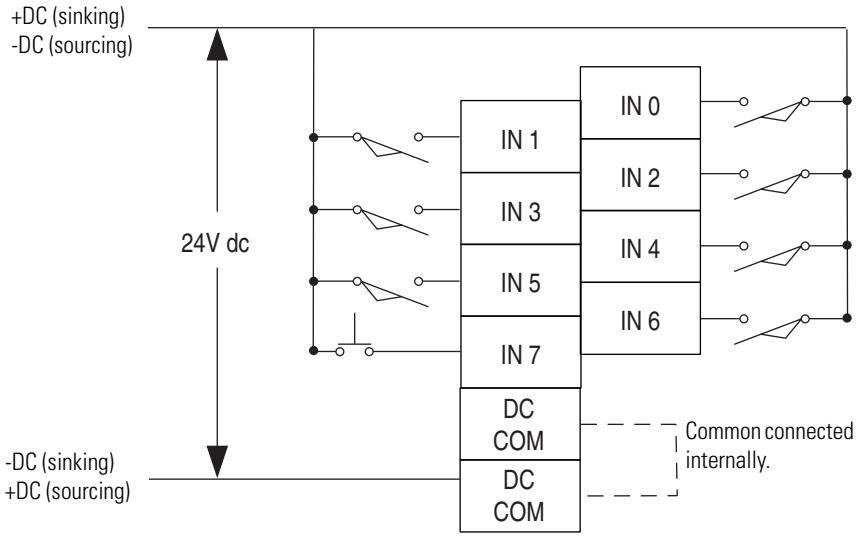

Figure 3.23 1762-IQ16 Wiring Diagram

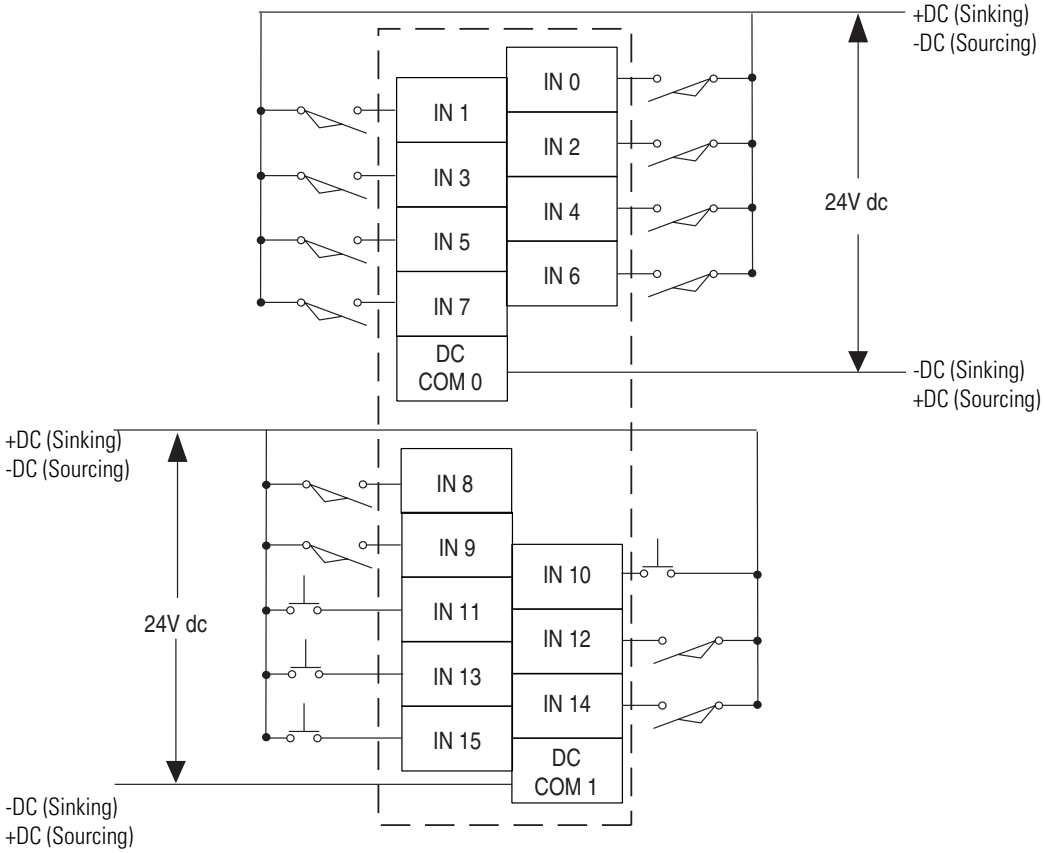

Figure 3.24 1762-IQ32T Wiring Diagram

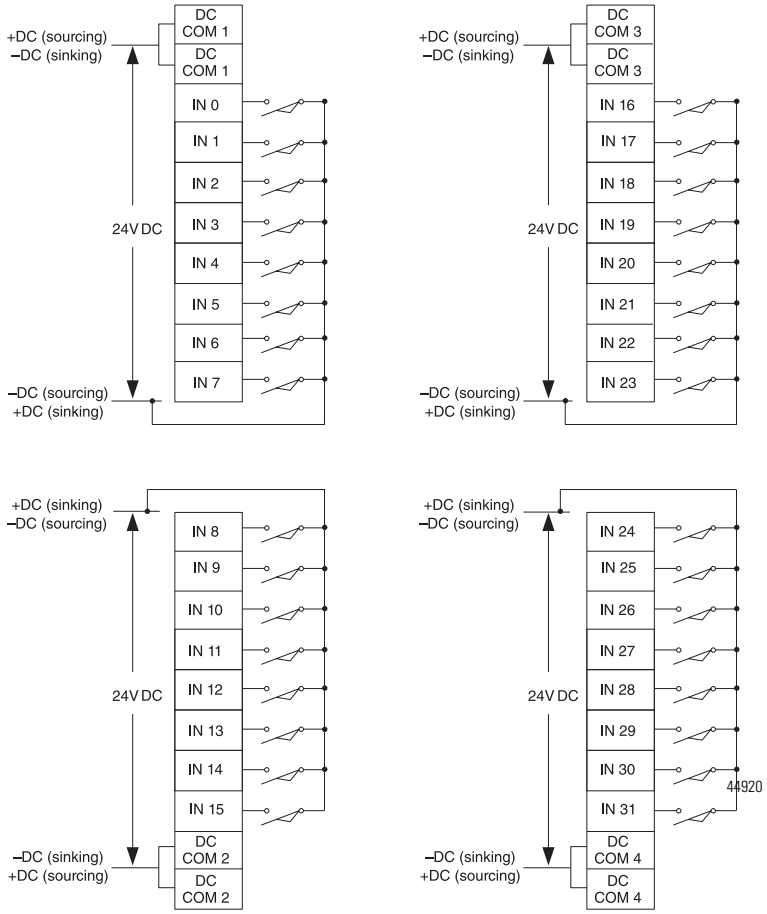

Figure 3.25 1762-OA8 Wiring Diagram

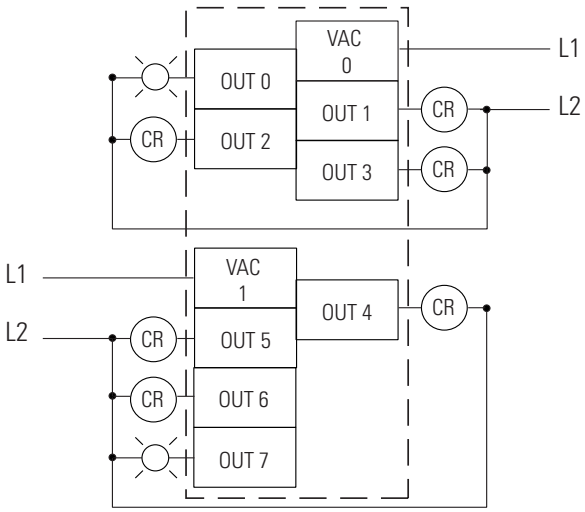

Figure 3.26 1762-OB8 Wiring Diagram

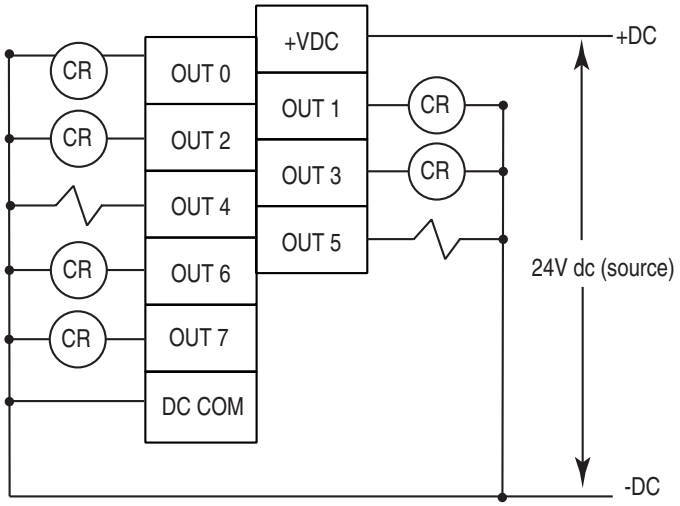

Figure 3.27 1762-OB16 Wiring Diagram

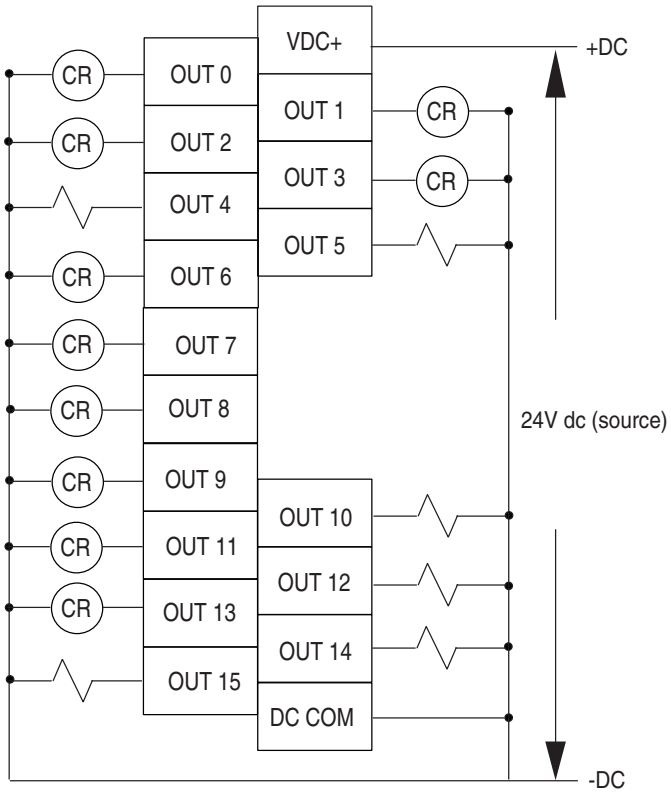

Figure 3.28 1762-OB32T Wiring Diagram

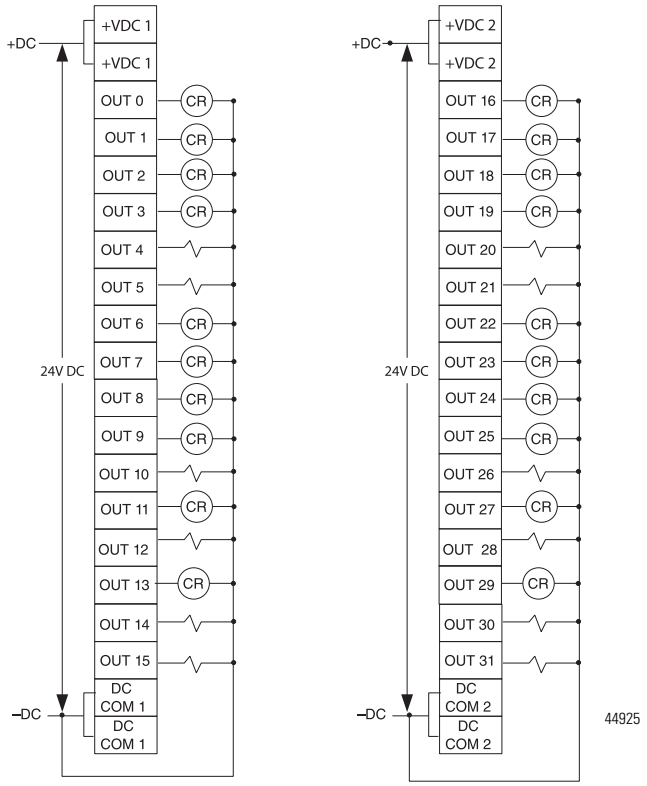

Figure 3.29 1762-OV32T Wiring Diagram

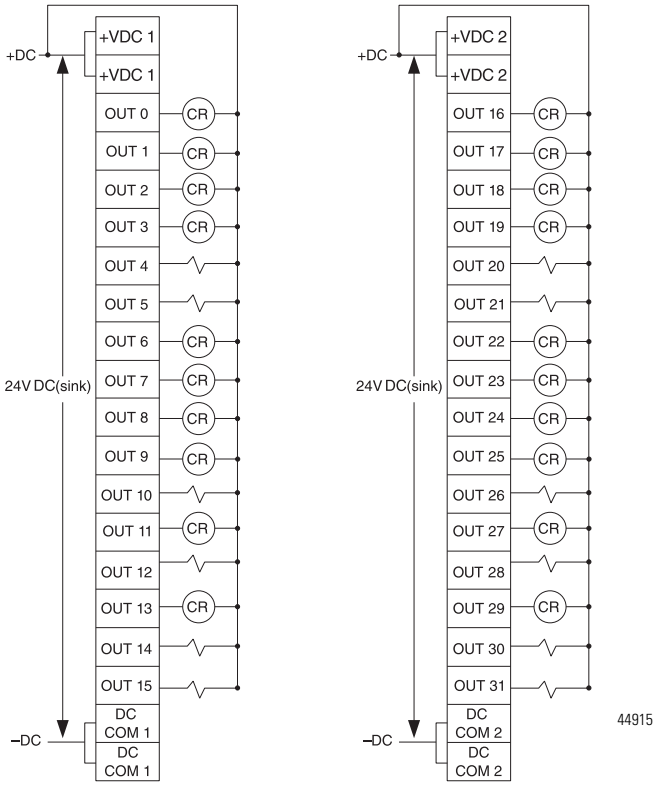

Figure 3.30 1762-OW8 Wiring Diagram

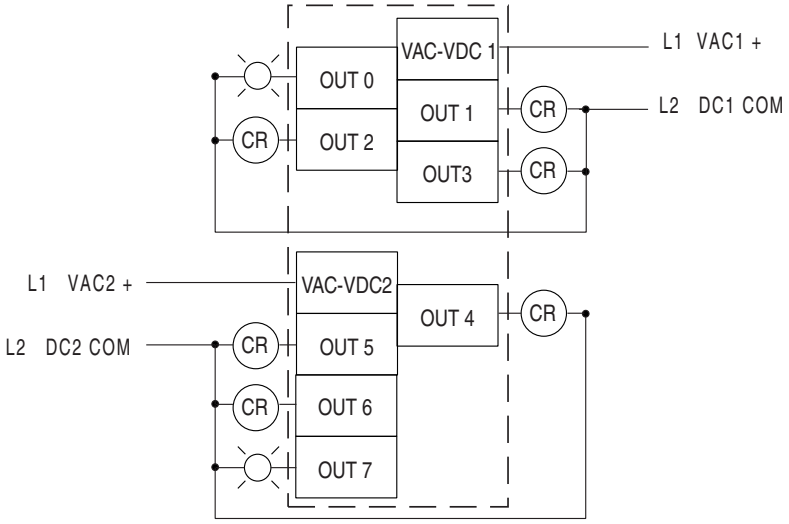

Figure 3.31 1762-OW16 Wiring Diagram

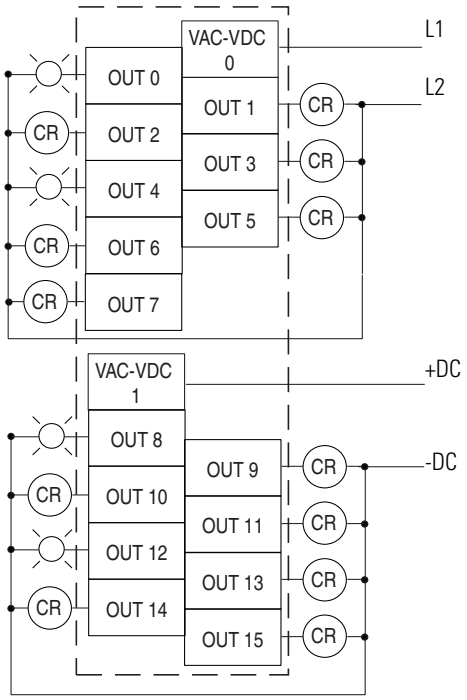

Figure 3.32 1762-OX6I Wiring Diagram

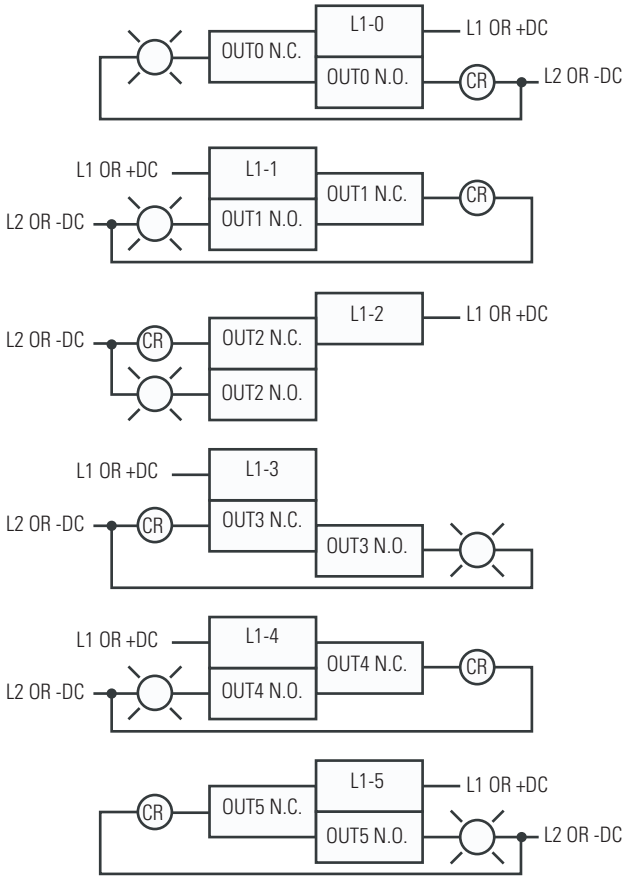

Figure 3.33 1762-IQ8OW6 Wiring Diagram

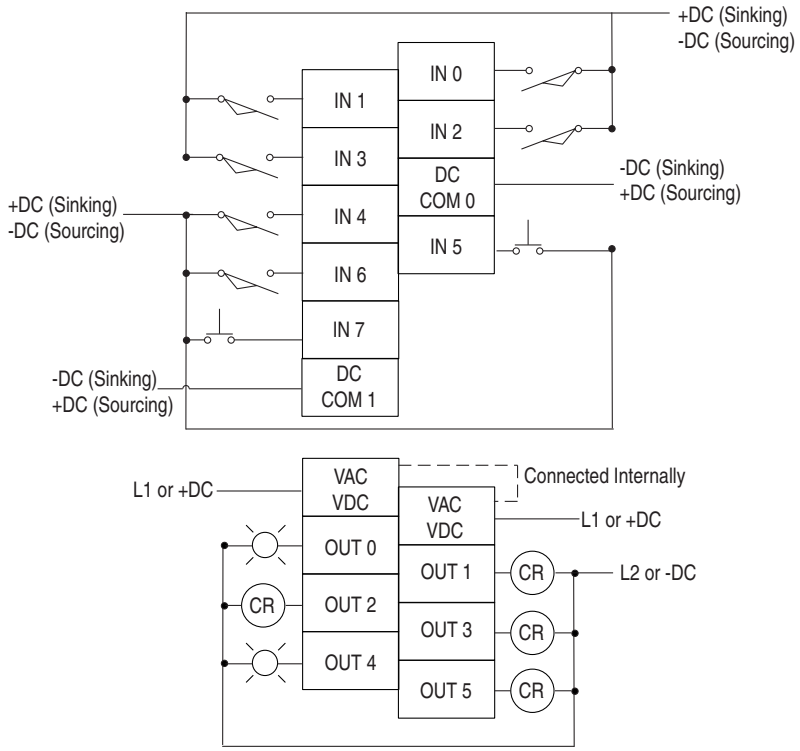

Analog Wiring

System Wiring Guidelines

Consider the following when wiring your analog modules:

- The analog common (COM) is not connected to earth ground inside the module. All terminals are electrically isolated from the system.
- Channels are not isolated from each other.
- Use Belden 8761, or equivalent, shielded wire.
- Under normal conditions, the drain wire (shield) should be connected to the metal mounting panel (earth ground). Keep the shield connection to earth ground as short as possible.
- To ensure optimum accuracy for voltage type inputs, limit overall cable impedance by keeping all analog cables as short as possible. Locate the I/O system as close to your voltage type sensors or actuators as possible.
- The module does not provide loop power for analog inputs. Use a power supply that matches the input transmitter specifications.

1762-IF2OF2 Input Type Selection

Select the input type, current or voltage, using the switches located on the module's circuit board *and* the input type/range selection bits in the Configuration Data File. Refer to MicroLogix 1200 and 1500 Programmable Controllers Instruction Set Reference Manual, publication number 1762-RM001. You can access the switches through the ventilation slots on the top of the module. Switch 1 controls channel 0; switch 2 controls channel 1. The factory default setting for both switch 1 and switch 2 is Current. Switch positions are shown below.

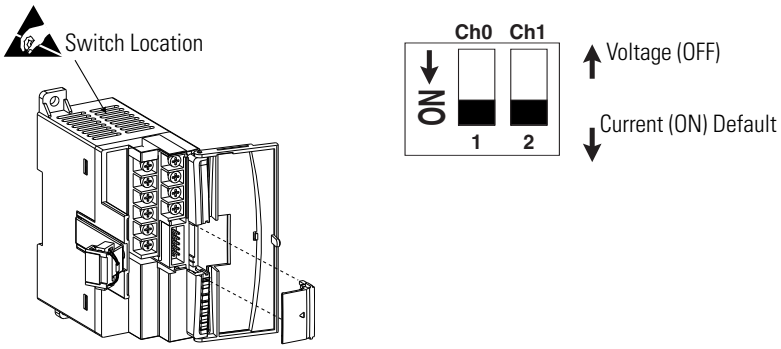

1762-IF2OF2 Output Type Selection

The output type selection, current or voltage, is made by wiring to the appropriate terminals, Iout or Vout, *and* by the type/range selection bits in the Configuration Data File. Refer to MicroLogix 1200 and 1500 Programmable Controllers Instruction Set Reference Manual, publication number 1762-RM001.

ATTENTION

Analog outputs may fluctuate for less than a second when power is applied or removed. This characteristic is common to most analog outputs. While the majority of loads will not recognize this short signal, it is recommended that preventive measures be taken to ensure that connected equipment is not affected.

1762-IF2OF2 Wiring

The following illustration shows the 1762-IF2OF2 analog expansion I/O terminal block.

Figure 3.34 1762-IF2OF2 Terminal Block Layout

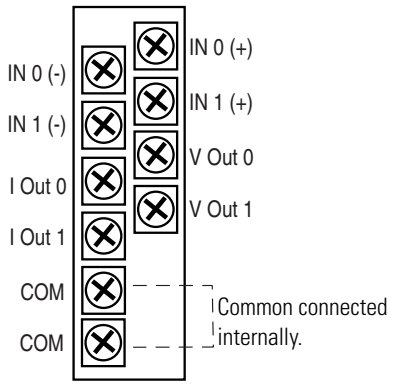

Figure 3.35 Differential Sensor Transmitter Types

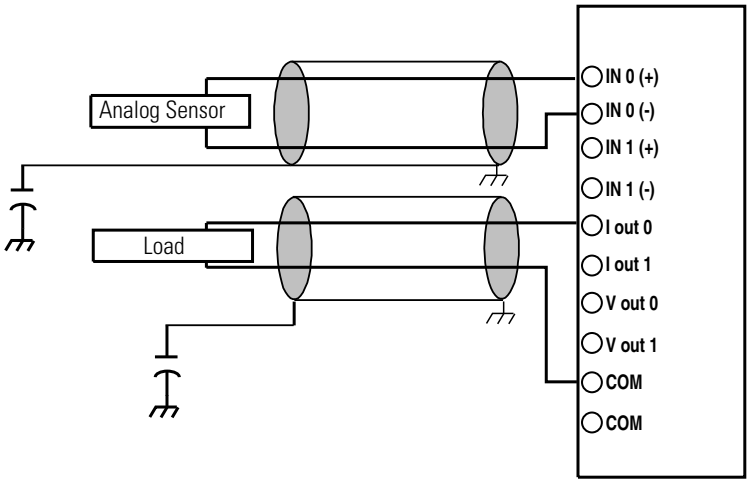

Figure 3.36 Single-ended Sensor/Transmitter Types

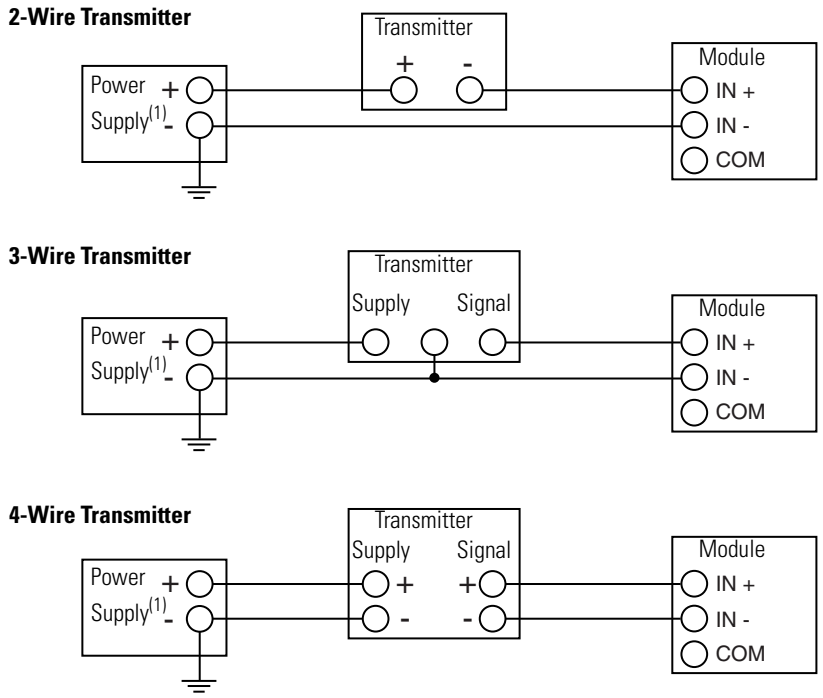

(1) All power supplies rated N.E.C. Class 2.

1762-IF4 Input Type Selection

Select the input type, current or voltage, using the switches located on the module's circuit board and the input type/range selection bits in the Configuration Data File. Refer to MicroLogix 1200 and 1500 Programmable Controllers Instruction Set Reference Manual, publication number 1762-RM001. You can access the switches through the ventilation slots on the top of the module.

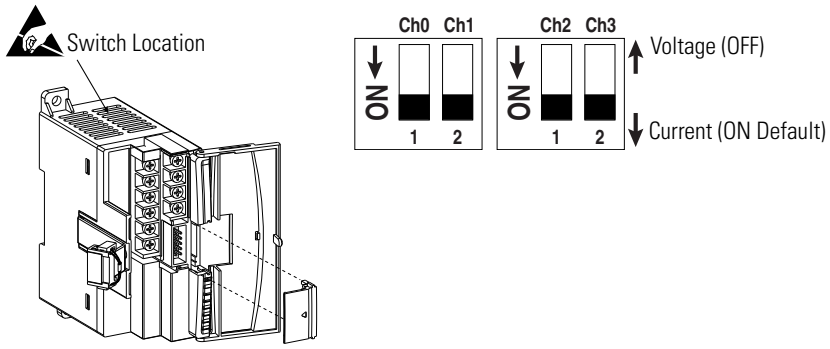

Figure 3.37 1762-IF4 Terminal Block Layout

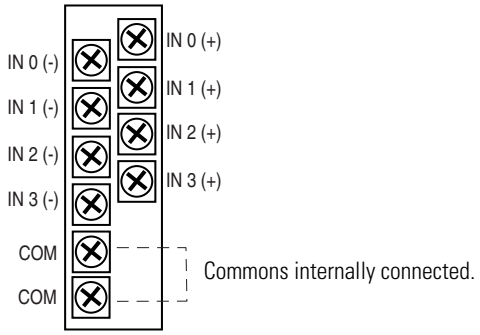

Figure 3.38 Differential Sensor Transmitter Types

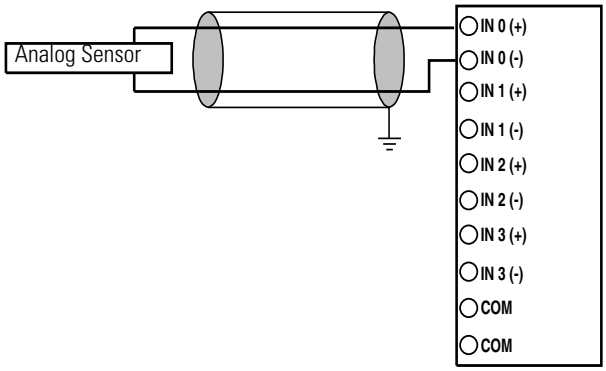

TIP

Grounding the cable shield at the module end only usually provides sufficient noise immunity. However, for best cable shield performance, earth ground the shield at both ends, using a 0.01µF capacitor at one end to block AC power ground currents, if necessary.

Figure 3.39 Sensor/Transmitter Types

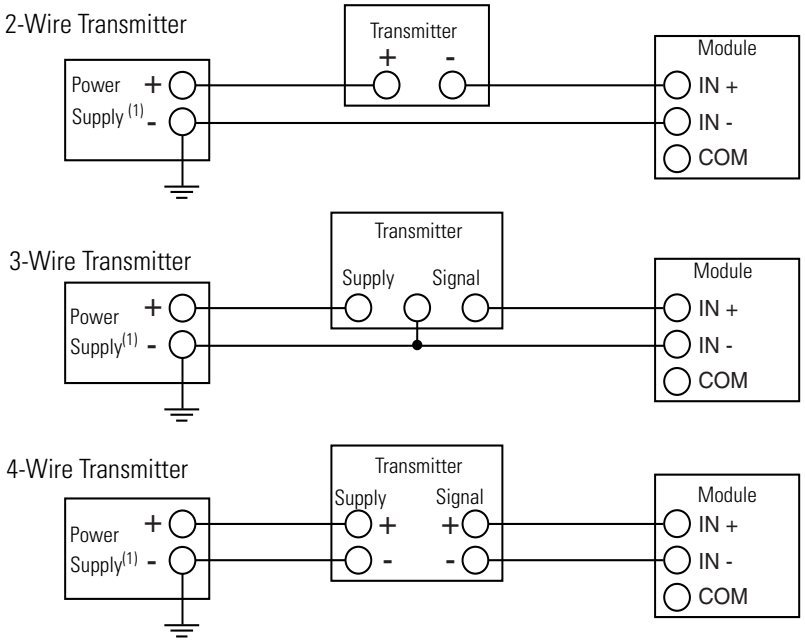

(1) All power supplies rated N.E.C. Class 2.

1762-OF4 Output Type Selection

The output type selection, current or voltage, is made by wiring to the appropriate terminals, Iout or Vout, and by the type/range selection bits in the Configuration Data File.

1762-OF4 Terminal Block Layout

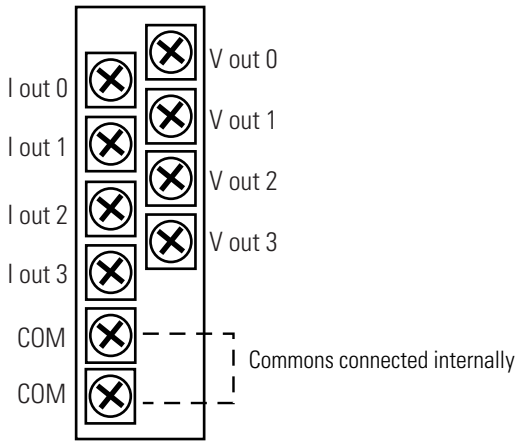

1762-OF4 Wiring

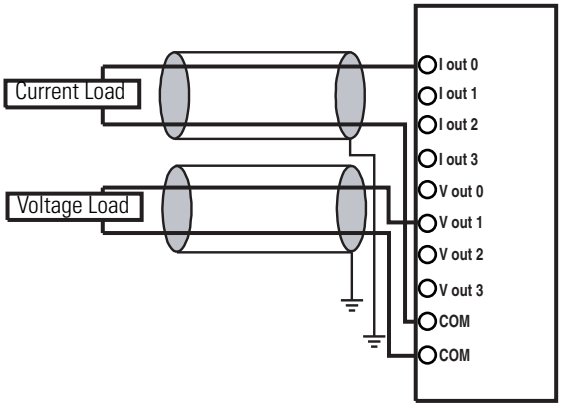

Notes:

Communication Connections

Introduction

This chapter describes how to communicate to your control system. The method you use and cabling required to connect your controller depends on what type of system you are employing. This chapter also describes how the controller establishes communication with the appropriate network. Topics include:

- supported communication protocols
- default communication configurations
- using communications toggle push button
- connecting to RS-232 port
- connecting to DH-485 network
- connecting to AIC+

MicroLogix 1200 controllers with the additional communications port (1762-L24AWAR, 1762-L24BWAR, 1762-L24BXBR, 1762-L40AWAR, 1762-L40BWAR, 1762-L40BXBR) offer advanced communications options, providing a clean, cost effective solution for applications requiring a network connection and HMI.

The additional communications port (Programmer/HMI Port) enables two communication devices to be connected to the controller simultaneously. For example, it provides local connectivity of an operator interface or programming terminal such as DF1 PanelView HMI, IBM-compatible personal computer using RSLogix 500 programming software, or 1747-PSD program storage device, and also allows the primary port (Channel 0) to be connected to either a network, a modem, or an ASCII device such as a barcode reader or weigh scale.

Supported Communication Protocols

MicroLogix 1200 controllers support the following communication protocols from the primary RS-232 communication channel, Channel 0:

- DH-485
- DF1 Full-duplex
- DF1 Half-duplex
- DF1 Radio Modem
- Modbus Master and Slave
- ASCII

The 1762-L24AWAR, 1762-L24BWAR, 1762-L24BXBR, 1762-L40AWAR, 1762-L40BWAR, and 1762-L40BXBR controllers are equipped with an

additional RS-232 communication channel called the Programmer/HMI Port, which supports DH Full-duplex only. The controller cannot initiate messages through this port. It can only respond to messages sent to it. All communication parameters are fixed and cannot be changed by a user.

See Default Communication Configuration on page 4-2 for the configuration settings.

For more information on MicroLogix 1200 communications, refer to the MicroLogix 1200 and MicroLogix 1500 Programmable Controllers Instruction Set Reference Manual, publication number 1762-RM001.

Default Communication Configuration

The MicroLogix 1200 has the following default communication configuration. The same default configuration is applied for both Channel 0 and the Programmer/HMI Port (for 1762-LxxxxxR only). The configurations for the Programmer/HMI Port are fixed and you cannot change them.

TIP

For Channel 0, the default configuration is present when:

- The controller is powered-up for the first time.
- The communications toggle push button specifies default communications (the DCOMM LED is on).
- An OS upgrade is completed.

See Appendix E for more information about communicating.

Table 4.1 DF1 Full-duplex Default Configuration Parameters

Parameter	Default
Baud Rate	19.2K
Parity	none
Source ID (Node Address)	1
Control Line	no handshaking
Stop Bits	1

Use the Communications Toggle Push Button

The Communications toggle push button is located on the processor under the processor door (if installed), as shown below.

Use the Communications toggle push button to change from the user-defined communication configuration to the default communications mode and back on Channel 0. The parameters of the Programmer/HMI Port are fixed at the default communications configuration. The Default Communications (DCOMM) LED operates to show when the controller is in the default communications mode (settings shown on page 4-2).

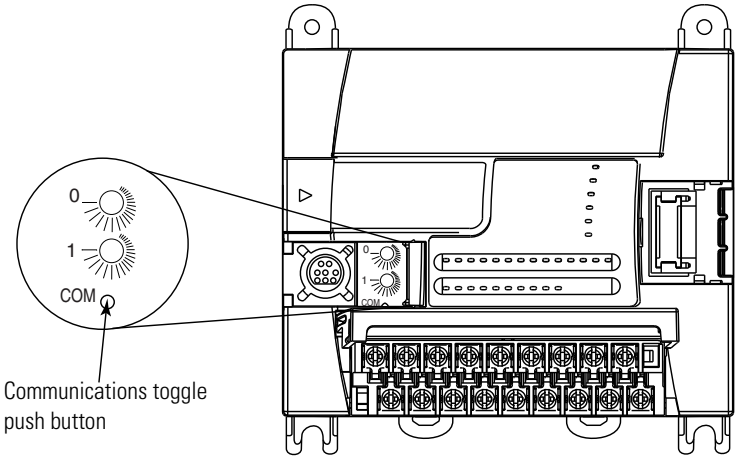

TIP

The Communications toggle push button must be pressed and held for one second to activate.

The Communications toggle push button only affects the communication configuration of Channel 0.

Connect to the RS-232 Port

There are two ways to connect the MicroLogix 1200 programmable controller to your personal computer using the DF1 protocol: using a point-to-point connection, or using a modem. Descriptions of these methods follow.

ATTENTION

All devices connected to the RS-232 channel must be referenced to controller ground, or be floating (not referenced to a potential other than ground). Failure to follow this procedure may result in property damage or personal injury.

- For 1762-L24BWA, 1762-L40BWA, 1762-L24BWAR and 1762-L40BWAR controllers:
  The COM of the sensor supply is also connected to chassis ground internally. The 24V dc sensor power source should not be used to power output circuits. It should only be used to power input devices.
- For 1762-L24BXB, 1762-L40BXB, 1762-L24BXBR and 1762-L40BXBR controllers:
  The VDC NEUT or common terminal of the power supply is also connected to chassis ground internally.

Table 4.2 Available Communication Cables

Communication Cables	Length
1761-CBL-PM02 series C or later	2 m (6.5 ft)
1761-CBL-HM02 series C or later	2 m (6.5 ft)
1761-CBL-AM00 series C or later	45 cm (17.7 in)
1761-CBL-AP00 series C or later	45 cm (17.7 in)
1761-CBL-PH02 series A or later	2 m (6.5 ft)
1761-CBL-AH02 series A or later	2 m (6.5 ft)
2707-NC8 series A or later	2 m (6.5 ft)
2707-NC9 series B or later	15 m (49.2 ft)
2707-NC10 series B or later	2 m (6.5 ft)
2707-NC11 series B or later	2 m (6.5 ft)

Make a DF1 Point-to-Point Connection

You can connect the MicroLogix 1200 programmable controller to your personal computer using a serial cable (1761-CBL-PM02) from your personal computer's serial port to the controller via Channel 0 and/or the Programmer/HMI Port (for 1762-LxxxxxR only). The recommended protocol for this configuration is DF1 Full-duplex.

We recommend using an Advanced Interface Converter (AIC+), catalog number 1761-NET-AIC, as your optical isolator, as shown on the following page. See page 4-13 for specific AIC+ cabling information.

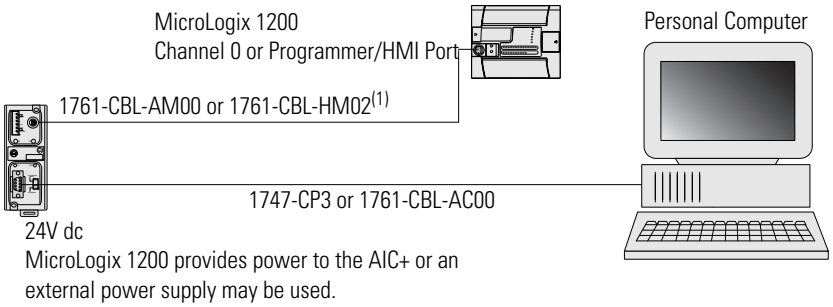

(1) Series C or higher cables are required.

Use a Modem

You can use modems to connect a personal computer to one MicroLogix 1200 controller (using DF1 Full-duplex protocol), to multiple controllers (using DF1 Half-duplex protocol), or Modbus RTU Slave protocol via Channel 0, as shown in the following illustration. (See Appendix E for information on types of modems you can use with the micro controllers.

IMPORTANT Do not attempt to use DH-485 protocol through modems under any circumstance.

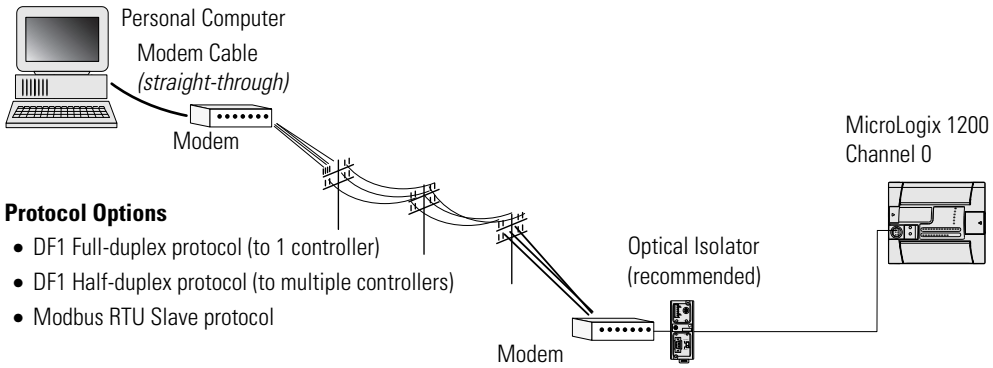

We recommend using an AIC+, catalog number 1761-NET-AIC, as your optical isolator. See page 4-13 for specific AIC+ cabling information.

Isolated Modem Connection

Using an AIC+ to isolate the modem is illustrated below.

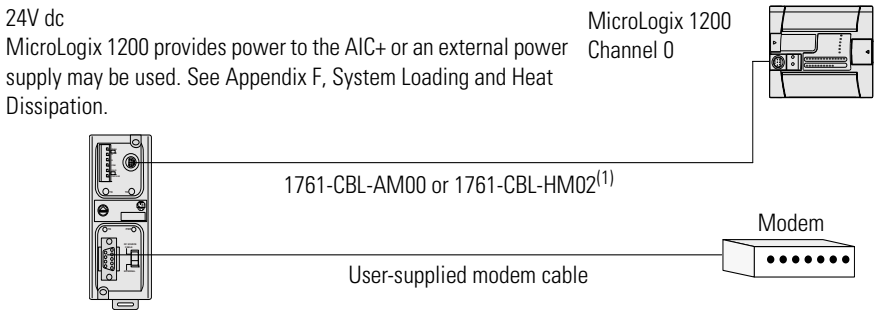

(1) Series C or higher cables are required.

For additional information on connections using the AIC+, refer to the Advanced Interface Converter (AIC+) User Manual, publication 1761-UM004.

Construct Your Own Modem Cable

If you construct your own modem cable, the maximum cable length is 15.24 m (50 ft) with a 25-pin or 9-pin connector. Refer to the following typical pinout for constructing a straight-through cable:

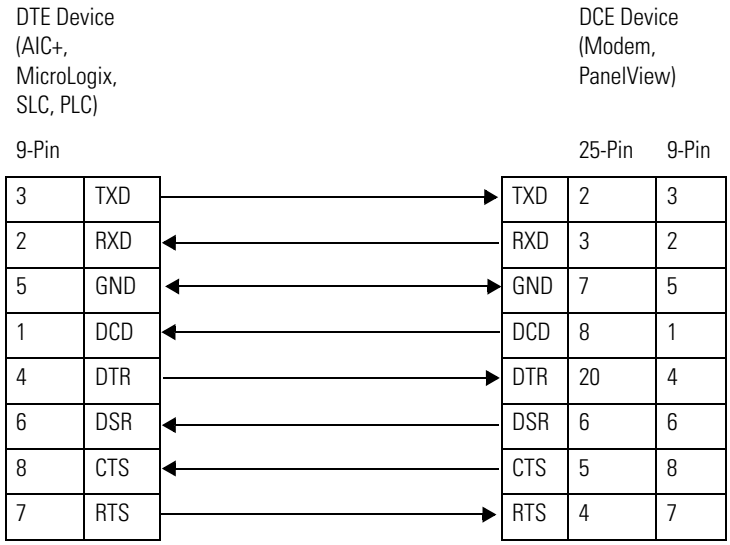

Construct Your Own Null Modem Cable

If you construct your own null modem cable, the maximum cable length is 15.24 m (50 ft) with a 25-pin or 9-pin connector. Refer to the following typical pinout:

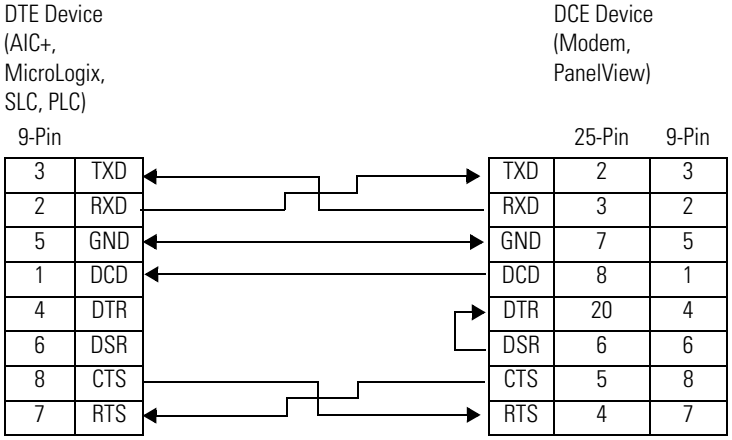

Connect to a DF1 Half-duplex Network

Use the following diagram for DF1 Half-duplex Master-Slave protocol without hardware handshaking.

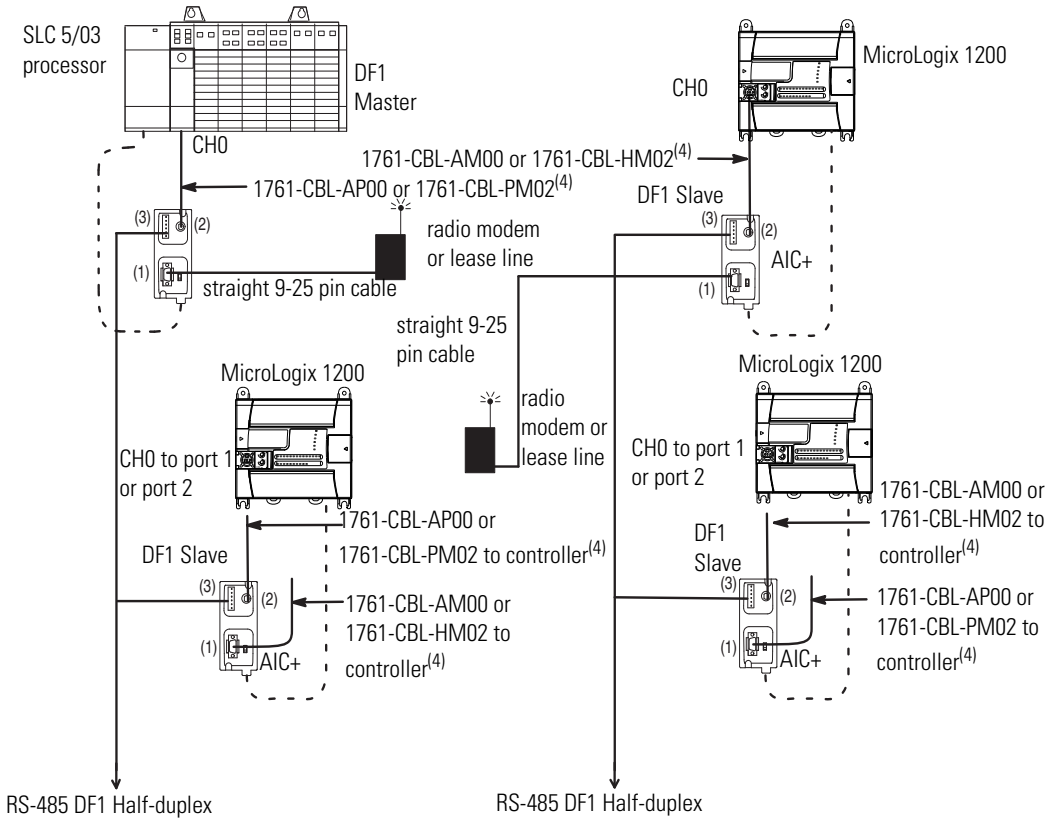

(1) DB-9 RS-232 port
(2) mini-DIN 8 RS-232 port
(3) RS-485 port
(4) Series C or higher cables are required.

Connect to a DH-485 Network

The following illustration shows how to connect to a DH-485 network.

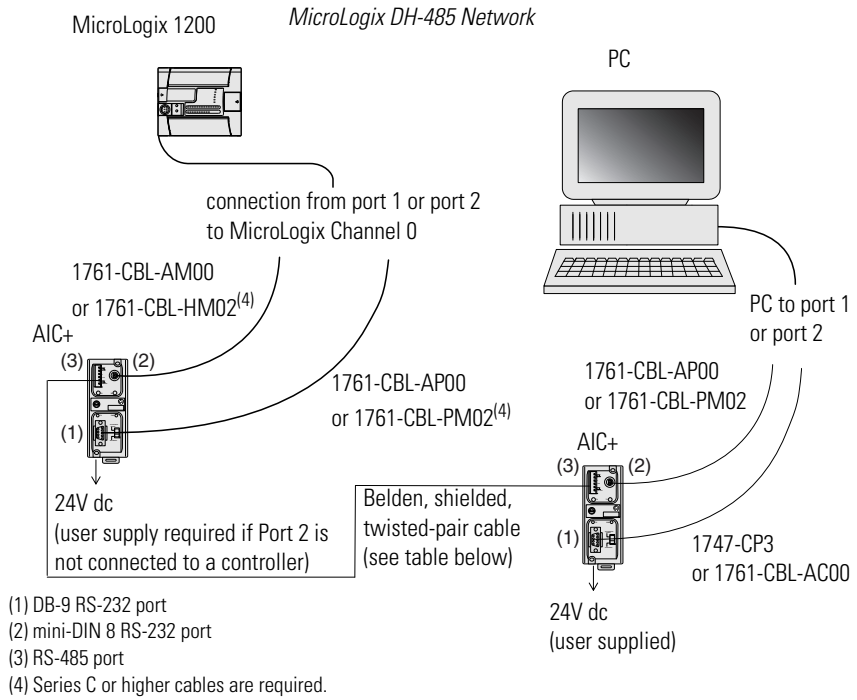

Recommended Tools

To connect a DH-485 network, you need tools to strip the shielded cable and to attach the cable to the AIC+ Advanced Interface Converter. We recommend the following equipment (or equivalent):

Table 4.3 Working with Cable for DH-485 Network

Description	Part Number	Manufacturer
Shielded Twisted Pair Cable	#3106A or #9842	Belden
Stripping Tool	45-164	Ideal Industries
1/8” Slotted Screwdriver	Not Applicable	Not Applicable

DH-485 Communication Cable

The suggested DH-485 communication cable is either Belden #3106A or #9842. The cable is jacketed and shielded with one or two twisted-wire pairs and a drain wire.

One pair provides a balanced signal line and one additional wire is used for a common reference line between all nodes on the network. The shield reduces the effect of electrostatic noise from the industrial environment on network communication.

The communication cable consists of a number of cable segments daisy-chained together. The total length of the cable segments cannot exceed 1219 m (4000 ft). However, two segments can be used to extend the DH-485 network to 2438 m (8000 ft). For additional information on connections using the AIC+, refer to the Advanced Interface Converter (AIC+) User Manual, publication 1761-UM004.

When cutting cable segments, make them long enough to route them from one AIC+ to the next, with sufficient slack to prevent strain on the connector. Allow enough extra cable to prevent chafing and kinking in the cable.

Use these instructions for wiring the Belden #3106A or #9842 cable. (See Cable Selection Guide on page 4-13 if you are using standard Allen-Bradley cables.)

Connect the Communication Cable to the DH-485 Connector

TIP We recommend a daisy-chained network. Do not make the incorrect connection shown below:

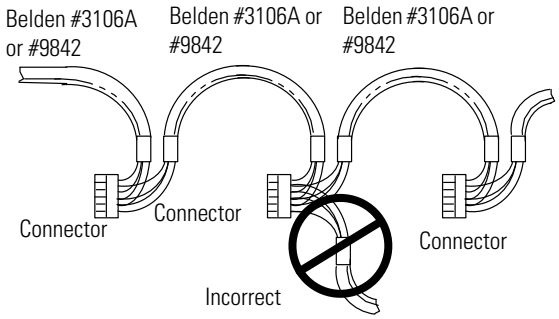

Single Cable Connection

When connecting a single cable to the DH-485 connector, use the following diagram.

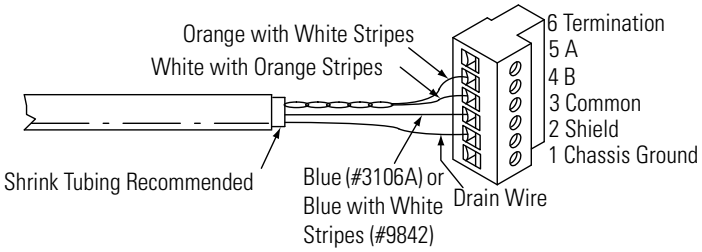

Multiple Cable Connection

When connecting multiple cables to the DH-485 connector, use the following diagram.

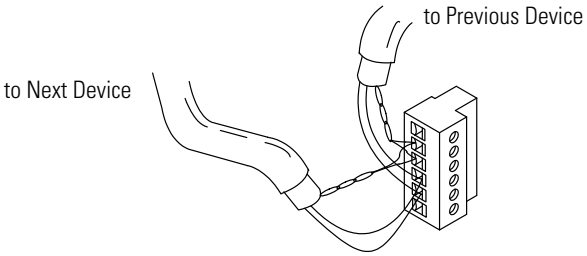

Table 4.4 Connections using Belden #3106A Cable

For This Wire/Pair	Connect This Wire	To This Terminal
Shield/Drain	Non-jacketed	Terminal 2 - Shield
Blue	Blue	Terminal 3 - (Common)
White/Orange	White with Orange Stripe	Terminal 4 - (Data B)
	Orange with White Stripe	Terminal 5 - (Data A)

Table 4.5 Connections using Belden #9842 Cable

For This Wire/Pair	Connect This Wire	To This Terminal
Shield/Drain	Non-jacketed	Terminal 2 - Shield
Blue/White	White with Blue Stripe	Cut back - no connection(1)
	Blue with White Stripe	Terminal 3 - (Common)
White/Orange	White with Orange Stripe	Terminal 4 - (Data B)
	Orange with White Stripe	Terminal 5 - (Data A)

(1) To prevent confusion when installing the communication cable, cut back the white with blue stripe wire immediately after the insulation jacket is removed. This wire is not used by DH-485.

Ground and Terminate the DH-485 Network

Only one connector at the end of the link must have Terminals 1 and 2 jumpered together. This provides an earth ground connection for the shield of the communication cable.

Both ends of the network must have Terminals 5 and 6 jumpered together, as shown below. This connects the termination impedance (of 120 ohm) that is built into each AIC+ as required by the DH-485 specification.

End-of-Line Termination

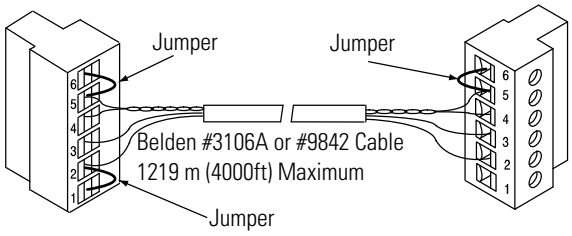

Connect the AIC+

The AIC+, catalog number 1761-NET-AIC, enables a MicroLogix 1200 to connect to a DH-485 network. The AIC+ has two RS-232 ports and one isolated RS-485 port. Typically, there is one AIC+ for each MicroLogix 1200. When two MicroLogix controllers are closely positioned, you can connect a controller to each of the RS-232 ports on the AIC+.

The AIC+ can also be used as an RS-232 isolator, providing an isolation barrier between the MicroLogix 1200 communications port and any equipment connected to it (for example a personal computer or modem).

The following figure shows the external wiring connections and specifications of the AIC+.

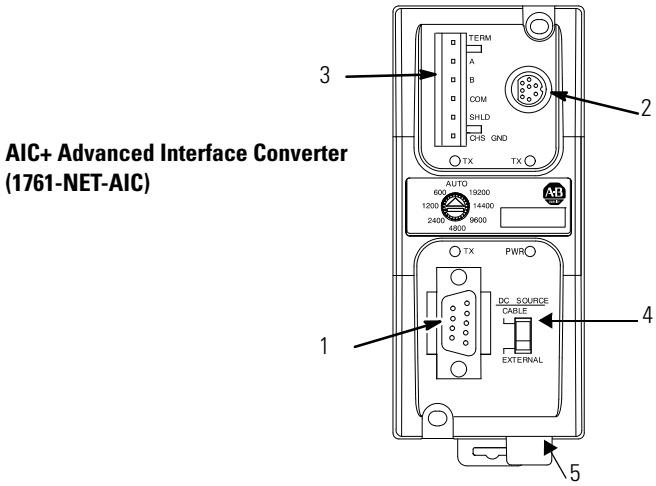

Item	Description
1	Port 1 - DB-9 RS-232, DTE
2	Port 2 - mini-DIN 8 RS-232 DTE
3	Port 3 - RS-485 Phoenix plug
4	DC Power Source selector switch (cable = port 2 power source, external = external power source connected to item 5)
5	Terminals for external 24V dc power supply and chassis ground

For additional information on connecting the AIC+, refer to the Advanced Interface Converter (AIC+) User Manual, publication 1761-UM004.

Cable Selection Guide

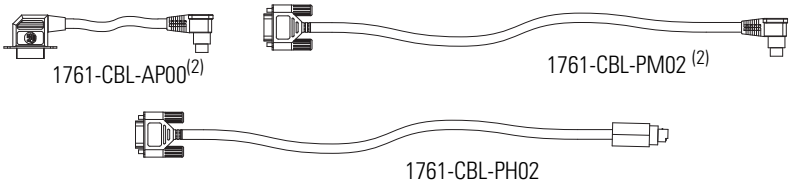

Cable	Length	Connections from	to AIC+	External Power Supply Required(1)	Power Selection Switch Setting(1)
1761-CBL-AP00(2) 1761-CBL-PM02(2) 1761-CBL-PH02	45 cm (17.7 in) 2m (6.5 ft) 2m (6.5 ft)	SLC 5/03 or SLC 5/04 processors, ch 0	port 2	yes	external
		MicroLogix 1000, 1200, or 1500	port 1	yes	external
		PanelView 550 through NULL modem adapter	port 2	yes	external
		DTAM Plus / DTAM Micro	port 2	yes	external
		PC COM port	port 2	yes	external

(1) External power supply required unless the AIC+ is powered by the device connected to port 2, then the selection switch should be set to cable.

(2) Series C or higher cables are required.

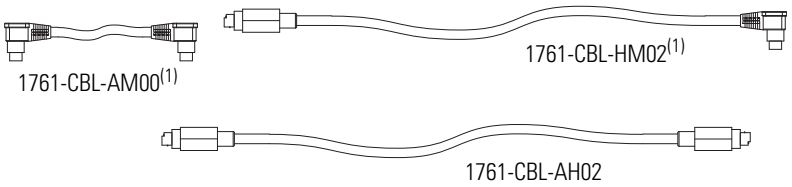

Table 4.6

Cable	Length	Connections from	to AIC+	External Power Supply Required(2)	Power Selection Switch Settings
1761-CBL-AM00(1) 1761-CBL-HM02(1) 1761-CBL-AH02	45 cm (17.7 in) 2m (6.5 ft) 2m (6.5 ft)	MicroLogix 1000, 1200, or 1500	port 2	no	cable
		to port 2 on another AIC+	port 2	yes	external

(1) Series C or higher cables are required.

(2) External power supply required unless the AIC+ is powered by the device connected to port 2, then the selection switch should be set to cable.

Cable	Length	Connections from	to AIC+	External Power Supply Required(1)	Power Selection Switch Setting(1)
1747-CP3 1761-CBL-AC00(1)	3m (9.8 ft) 45 cm (17.7 in)	SLC 5/03 or SLC 5/04 processor, channel 0	port 1	yes	external
		PC COM port	port 1	yes	external
		PanelView 550 through NULL modem adapter	port 1	yes	external
		DTAM Plus / DTAM Micro	port 1	yes	external
		Port 1 on another AIC+	port 1	yes	external

(1) External power supply required unless the AIC+ is powered by the device connected to port 2, then the selection switch should be set to *cable*.

Cable	Length	Connections from	to AIC+	External Power Supply Required(1)	Power Selection Switch Setting(1)
straight 9-25 pin	—	modem or other communication device	port 1	yes	external

(1) External power supply required unless the AIC+ is powered by the device connected to port 2, then the selection switch should be set to *cable*.

Cable	Length	Connections from	to AIC+	External Power Supply Required(1)	Power Selection Switch Setting(1)
1761-CBL-AS03 1761-CBL-AS09	3m (9.8 ft) 9.5m (31.17 ft)	SLC 500 Fixed, SLC 5/01, SLC 5/02, and SLC 5/03 processors	port 3	yes	external
		PanelView 550 RJ45 port	port 3	yes	external

(1) External power supply required unless the AIC+ is powered by the device connected to port 2, then the selection switch should be set to *cable*.

1761-CBL-PM02 Series C (or equivalent) Cable Wiring Diagram

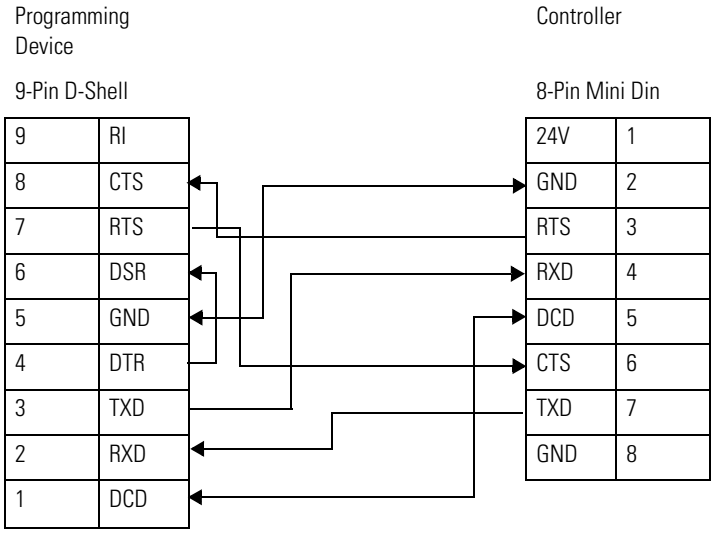

Recommended User-supplied Components

These components can be purchased from your local electronics supplier.

Table 4.7 User Supplied Components

Component	Recommended Model
external power supply and chassis ground	power supply rated for 20.4 to 28.8V dc
NULL modem adapter	standard AT
straight 9-25 pin RS-232 cable	see table below for port information if making own cables

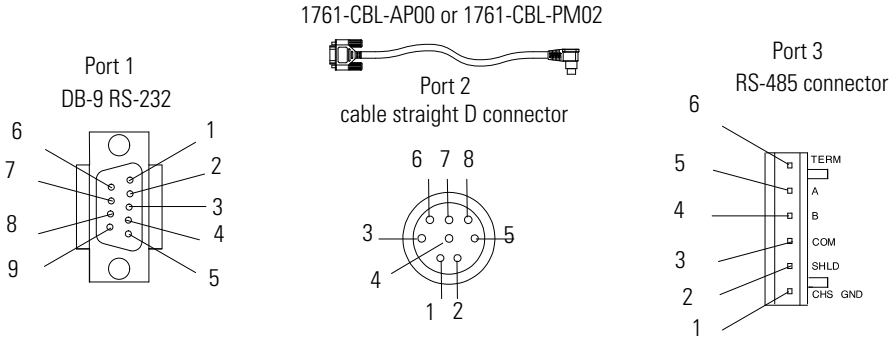

Table 4.8 AIC+ Terminals

Pin	Port 1: DB-9 RS-232	Port 2[2]: (1761-CBL-PM02 cable)	Port 3: RS-485 Connector
1	received line signal detector (DCD)	24V dc	chassis ground
2	received data (RxD)	ground (GND)	cable shield
3	transmitted data (TxD)	request to send (RTS)	signal ground
4	DTE ready (DTR)[1]	received data (RxD)[3]	DH-485 data B
5	signal common (GND)	received line signal detector (DCD)	DH-485 data A
6	DCE ready (DSR)[1]	clear to send (CTS)[3]	termination
7	request to send (RTS)	transmitted data (TxD)	not applicable
8	clear to send (CTS)	ground (GND)	not applicable
9	not applicable	not applicable	not applicable

(1) On port 1, pin 4 is electronically jumpered to pin 6. Whenever the AIC+ is powered on, pin 4 will match the state of pin 6.

(2) An 8-pin mini DIN connector is used for making connections to port 2. This connector is not commercially available. If you are making a cable to connect to port 2, you must configure your cable to connect to the Allen-Bradley cable shown above.

(3) In the 1761-CBL-PM02 cable, pins 4 and 6 are jumpered together within the DB-9 connector.

Safety Considerations

This equipment is suitable for use in Class I, Division 2, Groups A, B, C, D or non-hazardous locations only.

WARNING

EXPLOSION HAZARD

AIC+ must be operated from an external power source.

This product must be installed in an enclosure. All cables connected to the product must remain in the enclosure or be protected by conduit or other means.

See Safety Considerations on page 2-3 for additional information.

Install and Attach the AIC+

1. Take care when installing the AIC+ in an enclosure so that the cable connecting the MicroLogix 1200 controller to the AIC+ does not interfere with the enclosure door.
2. Carefully plug the terminal block into the RS-485 port on the AIC+ you are putting on the network. Allow enough cable slack to prevent stress on the plug.
3. Provide strain relief for the Belden cable after it is wired to the terminal block. This guards against breakage of the Belden cable wires.

Apply Power to the AIC+

In normal operation with the MicroLogix 1200 programmable controller connected to port 2 of the AIC+, the controller powers the AIC+. Any AIC+ not connected to a controller requires a 24V dc power supply. The AIC+ requires 120 mA at 24V dc.

If both the controller and external power are connected to the AIC+, the power selection switch determines what device powers the AIC+.

ATTENTION

If you use an external power supply, it must be 24V dc (-15%/+20%). Permanent damage results if a higher voltage supply is used.

Set the DC Power Source selector switch to EXTERNAL before connecting the power supply to the AIC+. The following illustration shows where to connect external power for the AIC+.

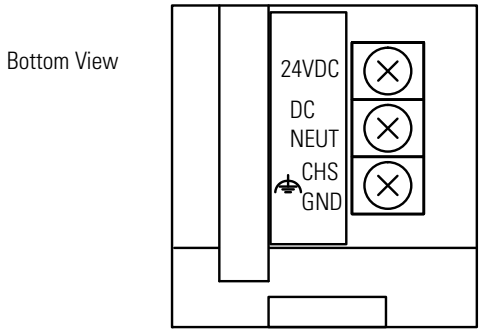

ATTENTION

Always connect the CHS GND (chassis ground) terminal to the nearest earth ground. This connection must be made whether or not an external 24V dc supply is used.

Power Options

Below are two options for powering the AIC+:

- Use the 24V dc user power supply built into the MicroLogix 1200 controller. The AIC+ is powered through a hard-wired connection using a communication cable (1761-CBL-HM02, or equivalent) connected to port 2.
- Use an external DC power supply with the following specifications:
  - operating voltage: 24V dc (-15%/+20%)
  - output current: 150 mA minimum
  - rated NEC Class 2

  Make a hard-wired connection from the external supply to the screw terminals on the bottom of the AIC+.

ATTENTION

If you use an external power supply, it must be 24V dc (-15%/+20%). Permanent damage results if miswired with the wrong power source.

Use Trim Pots

Trim Pot Operation

The processor has two trimming potentiometers (trim pots) which allow modification of data within the controller. Adjustments to the trim pots change the value in the corresponding Trim Pot Information (TPI) register. The data value of each trim pot can be used throughout the control program as timer, counter, or analog presets depending upon the requirements of the application.

The trim pots are located below the memory module port cover and to the right of the communications port, as shown below.

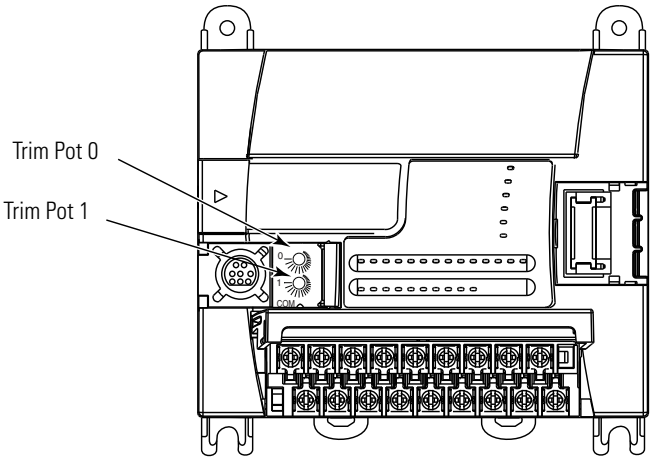

Use a small flathead screwdriver to turn the trim pots. Adjusting their value causes data to change within a range of 0 to 250 (fully clockwise). The maximum rotation of each trim pot is three-quarters, as shown below. Trim pot stability over time and temperature is typically ±2 counts.

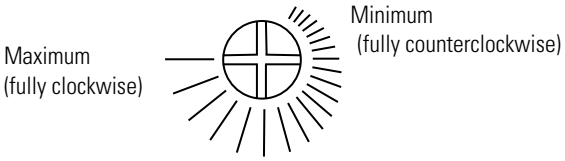

Trim pot file data is updated continuously whenever the controller is powered up.

Trim Pot Information Function File

The composition of the Trim Pot Information (TPI) Function File is described in the MicroLogix 1200 and 1500 Programmable Controllers Instruction Set Reference Manual, publication 1762-RM001.

Error Conditions

Error conditions of the TPI Function File are described in the MicroLogix 1200 and 1500 Programmable Controllers Instruction Set Reference Manual, publication 1762-RM001.

Use Real-time Clock and Memory Modules

TIP For more information on 'Real-time Clock Function File' and 'Memory Module Information File' refer to the MicroLogix 1200 and 1500 Programmable Controllers Instruction Set Reference Manual, publication 1762-RM001.

Three modules with different levels of functionality are available for use with the MicroLogix 1200 controller.

Catalog Number	Function
1762-RTC	Real-time Clock
1762-MM1	Memory Module
1762-MM1RTC	Memory Module and Real-time Clock

Real-time Clock Operation

The following sections cover:

- Removal/Insertion Under Power
- Write Data to the Real-time Clock
- RTC Battery Operation

Removal/Insertion Under Power

At power-up and when the controller enters a run or test mode, the controller determines if a real-time clock module (RTC) is present. If an RTC is present, its values (date, time and status) are written to the RTC Function File in the controller.

The RTC module can be installed or removed at any time without risk of damage to either the module or the controller. If an RTC is installed while the MicroLogix 1200 is in a run or test mode, the module is not recognized until either a power cycle occurs or until the controller is placed in a non-executing mode (program mode, suspend mode or fault condition).

Removal of the RTC during run mode is detected within one program scan. Removal of the RTC while in run mode causes the controller to write zeros to the RTC Function File.

The following table indicates the accuracy of the RTC for various temperatures.

Table 6.1 RTC Accuracy

Ambient Temperature	Accuracy[1]
0 °C (+32 °F)	+34 … -70 seconds/month
+25 °C (+77 °F)	+36 … -68 seconds/month
+40 °C (+104 °F)	+29 … -75 seconds/month
+55 °C (+131 °F)	-133 … -237 seconds/month

(1) These numbers are maximum worst case values over a 31-day month.

Write Data to the Real-time Clock

When valid data is sent to the real-time clock from the programming device or another controller, the new values take effect immediately.

The real-time clock does not recognize or accept invalid date or time data.

Use the Disable Clock button in your RSLogix programming software to disable the real-time clock before storing a module. This decreases the drain on the RTC battery during storage.

RTC Battery Operation

The real-time clock has an internal battery that is not replaceable. The RTC Function File features a battery low indicator bit (RTC:0/BL), which shows the status of the RTC battery. When the battery is low, the indicator bit is set (1). This means that the battery may fail within 14 days and the real-time clock module needs to be replaced. When the battery low indicator bit is clear (0), the battery level is acceptable or a real-time clock is not attached.

If the RTC battery is low and the controller is powered, the RTC operates normally. If the controller power is removed and the RTC battery is low, RTC data is lost.

Life Span	Operating Temperature	Storage Temperature[1]
5 years	0…40 °C (32 … 104 °F)	-40 … 60 °C (-40 … 140 °F)

(1) Stored for six months.

ATTENTION

Operating with a low battery indication for more than 14 days may result in invalid RTC data unless power is on continuously.

Memory Module Operation

The memory module supports the following features:

- User Program and Data Back-up
- User Program Compare
- Data File Download Protection
- Memory Module Write Protection
- Removal/Insertion Under Power

ATTENTION

Electrostatic discharge can damage the Memory Module. Do not touch the connector pins or other sensitive areas.

User Program and Data Back-up

The memory module provides a simple and flexible program/data transport mechanism, allowing the user to transfer the program and data to the controller without the use of a personal computer and programming software.

The memory module can store one user program at a time.

During program transfers to or from the memory module, the controller's RUN LED flashes.

Program Compare

The memory module can also provide application security, allowing you to specify that if the program stored in the memory module does not match the program in the controller, the controller will not enter an executing (run or test) mode. To enable this feature, set the S:2/9 bit in the system status file. See 'Status System File' in the MicroLogix 1200 and 1500 Programmable Controllers Instruction Set Reference Manual, Publication 1762-RM001 for more information.

Data File Download Protection

The memory module supports data file download protection. This allows user data to be saved (not overwritten) during a download.

TIP Data file download protection is only functional if the processor does not have a fault, size of all protected data files in the memory module exactly match the size of protected data files within the controller, and all protected data files are of the same type. See 'Protecting Data Files During Download' in the MicroLogix 1200 and 1500 Programmable Controllers Instruction Set Reference Manual, publication 1762-RM001.

Memory Module Write Protection

The memory module supports write-once, read-many behavior. Write protection is enabled using your programming software.

IMPORTANT Once set, write protection cannot be removed. A change cannot be made to the control program stored in a write protected memory module. If a change is required, use a different memory module.

Removal/Insertion Under Power

The memory module can be installed or removed at any time without risk of damage to either the memory module or the controller. If a memory module is installed while the MicroLogix 1200 is executing, the memory module is not recognized until either a power cycle occurs, or until the controller is placed in a non-executing mode (program mode, suspend mode or fault condition).

Specifications

The 1762 specifications include:

- Controller Specifications
- Expansion I/O Specifications

Controller Specifications

Table A.1 General

Attribute		1762-					
		L24AWA L24AWAR	**L24BWA L24BWAR**	**L24BXB L24BXBR**	**L40AWA L40AWAR**	**L40BWA L40BWAR**	**L40BXB L40BXBR**
Dimensions		Height: 90 mm, 104 mm (with DIN latch open) Width: 110 mm Depth: 87 mm			Height: 90 mm, 104 mm (with DIN latch open) Width: 160 mm Depth: 87 mm		
Shipping weight		0.9 kg (2.0 lbs)			1.1 kg (2.4 lbs)		
Number of I/O		14 inputs and 10 outputs			24 inputs, 16 outputs		
Power supply voltage		100 … 240V ac (-15%, +10%) at 47…63 Hz		24V dc (-15%, +10%) Class 2 SELV	100 … 240V ac (-15%, +10%) at 47…63 Hz		24V dc (-15%, +10%) Class 2 SELV
Heat dissipation		15.2 W	15.7 W	17.0 W	21.0 W	22.0 W	27.9 W
Power supply inrush current		120V ac: 25A for 8 ms 240V ac: 40A for 4 ms		24V dc: 15A for 20 ms	120V ac: 25A for 8 ms 240V ac: 40A for 4 ms		24V dc: 15A for 30 ms
Power supply usage		68VA	70VA	27 W	80VA	82VA	40 W
Power supply output	5V dc	400 mA	400 mA(1)	400 mA	600 mA	600 mA(2)	600 mA
	24V dc	350 mA	350 mA(1)	350 mA	500 mA	500 mA(2)	500 mA
Sensor power output		none	250 mA at 24V dc AC Ripple < 500 mV peak-to-peak 400 µF max.(1)	none	none	400 mA at 24V dc AC Ripple < 500 mV peak-to-peak 400 µF max.(2)	none
Input circuit type		120V ac	24V dc sink/source	24V dc sink/source	120V ac	24V dc sink/source	24V dc sink/source
Output circuit type		Relay	Relay	Relay/FET	Relay	Relay	Relay/FET
Temperature, operating		0…55 °C (32…131 °F) ambient					
Temperature, storage		-40…+85 °C (-40…185 °F) ambient					
Operating humidity		5…95% relative humidity (non-condensing)					
Vibration		Operating: 10…500 Hz, 5G, 0.030 in. max. peak-to-peak, 2 hours each axis Relay Operation: 1.5G					

Table A.1 General

Attribute	1762-					
	L24AWA L24AWAR	L24BWA L24BWAR	L24BXB L24BXBR	L40AWA L40AWAR	L40BWA L40BWAR	L40BXB L40BXBR
Shock	Operating: 30G; 3 pulses each direction, each axis Relay Operation: 7G Non-Operating: 50G panel mounted (40G DIN Rail mounted); 3 pulses each direction, each axis					
Agency certification	• UL 508 • C-UL under CSA C22.2 no. 142 • Class I, Div. 2, Groups A, B, C, D (UL 1604, C-UL under CSA C22.2 no. 213) • CE/RCM/EAC compliant for all applicable directives					
Electrical/EMC	The controller has passed testing at the following levels: • EN 61000-4-2: 4 kV contact, 8 kV air, 4 kV indirect • EN 61000-4-3: 10V/m, 80 to 1000 MHz, 80% amplitude modulation, +900 MHz keyed carrier • EN 61000-4-4: 2 kV, 5 kHz; communications cable: 1 kV, 5 kHz • EN 61000-4-5: communications cable 1 kV galvanic gun I/O: 2 kV CM (common mode), 1 kV DM (differential mode) AC Power Supply: 4 kV CM (common mode), 2 kV DM (differential mode) DC Power Supply: 500V CM (common mode), 500V DM (differential mode) • EN 61000-4-6: 10V, communications cable 3V					
Terminal screw torque	0.791 Nm (7 in-lb) rated					

(1) Do not allow the total load power consumed by the 5V dc, 24V dc, and sensor power outputs to exceed 12W.

(2) Do not allow the total load power consumed by the 5V dc, 24V dc, and sensor power outputs to exceed 16W.

See Appendix F for system validation worksheets.

Table A.2 Input Specifications

Attribute	1762-L24AWA 1762-L40AWA 1762-L24AWAR 1762-L40AWAR	1762-L24BWA, -L24BXB, -L40BWA, -L40BXB 1762-L24BWAR, -L24BXBR, -L40BWAR, -L40BXBR	
		Inputs 0 through 3	Inputs 4 and higher
On-state voltage range	79…132V ac	14…24V dc (+10% at 55 °C/131 °F) (+25% at 30 °C/86 °F)	10…24V dc (+10% at 55 °C/131 °F) (+25% at 30 °C/86 °F)
Off-state voltage range	0…20V ac	0…5V dc	
Operating frequency	47…63 Hz	0 Hz…20 kHz	0 Hz…1 kHz (scan time dependent)
On-state current: • minimum • nominal • maximum	• 5.0 mA at 79V ac • 12 mA at 120V ac • 16.0 mA at 132V ac	• 2.5 mA at 14V dc • 7.3 mA at 24V dc • 12.0 mA at 30V dc	• 2.0 mA at 10V dc • 8.9 mA at 24V dc • 12.0 mA at 30V dc

Table A.2 Input Specifications

Attribute	1762-L24AWA 1762-L40AWA 1762-L24AWAR 1762-L40AWAR	1762-L24BWA, -L24BXB, -L40BWA, -L40BXB 1762-L24BWAR, -L24BXBR, -L40BWAR, -L40BXBR	
		Inputs 0 through 3	Inputs 4 and higher
Off-state leakage current	2.5 mA max.	1.5 mA min.	
Nominal impedance	12 kΩ at 50 Hz 10 kΩ at 60 Hz	3.3 kΩ	2.7 kΩ
Inrush current (max.) at 120V ac	250 mA	Not Applicable	

Table A.3 Output Specifications - General

Attribute		1762-			
		L24AWA L24BWA L24AWAR L24BWAR	L24BXB L24BXBR	L40AWA L40BWA L40AWAR L40BWAR	L40BXB L40BXBR
Relay and FET Outputs					
Controlled load, max.		1440VA	–	1440VA	1440VA
Continuous current, max.					
Current per group common		8 A	7.5 A	8 A	8 A
Current per controller	at 150V max	30 A or total of per-point loads, whichever is less			
	at 240V max	20 A or total of per-point loads, whichever is less			
Relay Outputs					
Turn on time/Turn off time		10 msec (minimum)(1)			
Relay life - Electrical		Refer to Relay Life Chart			
Relay life - Mechanical		20,000,000 cycles			
Load current		10 mA (minimum)			

(1) scan time dependent

Table A.4 Relay Contact Ratings

Maximum Volts	Amperes		Amperes Continuous	Volt-Amperes	
	Make	Break		Make	Break
240V ac	7.5A	0.75A	2.5A(1)	1800 VA	180 VA
120V ac	15A	1.5A	2.5A(1)	1800 VA	180 VA
125V dc	0.22A(2)		1.0A	28 VA	
24V dc	1.2A(2)		2.0A		

(1) 1.5A above 40°C.

(2) For dc voltage applications, the make/break ampere rating for relay contacts can be determined by dividing 28 VA by the applied dc voltage. For example, 28 VA/48V dc = 0.58A. For dc voltage applications less than 14V, the make/break ratings for relay contacts cannot exceed 2A.

ATTENTION

Do not exceed the "Current per group common" specification.

Relay Life Chart

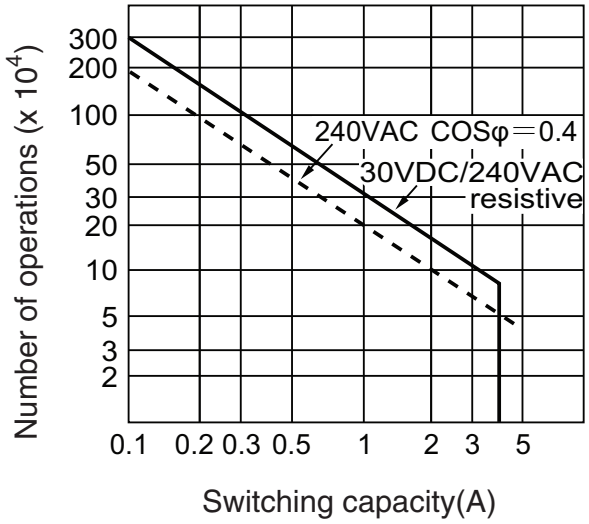

Table A.5 BXB FET Output Specifications

Attribute	General Operation	High Speed Operation[1] (Output 2 Only)
Power supply voltage	24V dc (-15%, +10%)	
On-state voltage drop: • at maximum load current • at maximum surge current	 • 1V dc • 2.5V dc	 • Not Applicable • Not Applicable
Current rating per point • maximum load • minimum load • maximum leakage	 • See graphs below. • 1.0 mA • 1.0 mA	 • 100 mA • 10 mA • 1.0 mA
Maximum output current (temperature dependent):		
Surge current per point: • peak current • maximum surge duration • maximum rate of repetition at 30 °C (86 °F) • maximum rate of repetition at 55 °C (131 °F)	 • 4.0A • 10 ms • once every second • once every 2 seconds	 • Not applicable • Not applicable • Not applicable • Not applicable
Turn-on time, max.	0.1 ms	6 µs
Turn-off time, max.	1.0 ms	18 µs
Repeatability, max.	n/a	2 µs
Drift, max.	n/a	1 µs per 5 °C (41 °F)

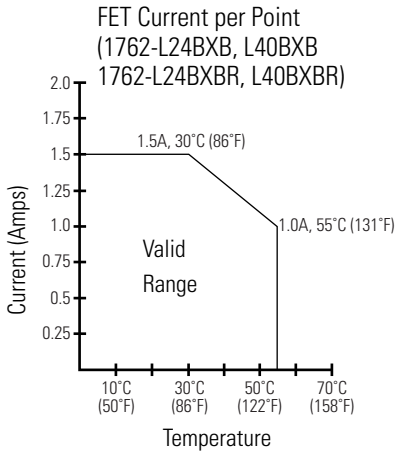

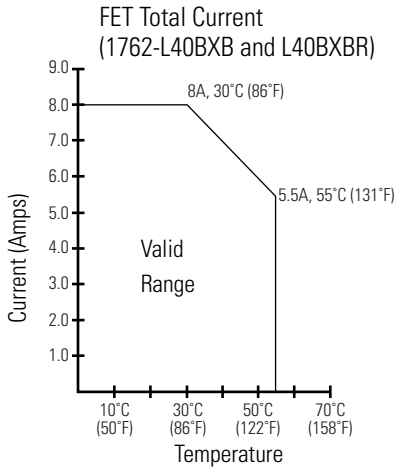

(1) Output 2 is designed to provide increased functionality over the other FET outputs. Output 2 may be used like the other FET transistor outputs, but in addition, within a limited current range, it may be operated at a higher speed. Output 2 also provides a pulse train output (PTO) or pulse width modulation output (PWM) function.

Table A.6 AC Input Filter Settings

Nominal Filter Setting (ms)	ON Delay (ms)		OFF Delay (ms)	
	Minimum	Maximum	Minimum	Maximum
8	2	20	10	20

Table A.7 Fast DC Input Filter Settings (Inputs 0 to 3)

Nominal Filter Setting (ms)	ON Delay (ms)		OFF Delay (ms)		Maximum Counter Frequency (Hz) 50% Duty Cycle
	Minimum	Maximum	Minimum	Maximum	
0.025	0.005	0.025	0.005	0.025	20.0 kHz
0.075	0.040	0.075	0.045	0.075	6.7 kHz
0.100	0.050	0.100	0.060	0.100	5.0 kHz
0.250	0.170	0.250	0.210	0.250	2.0 kHz
0.500	0.370	0.500	0.330	0.500	1.0 kHz
1.00	0.700	1.000	0.800	1.000	0.5 kHz
2.000	1.700	2.000	1.600	2.000	250 Hz
4.000	3.400	4.000	3.600	4.000	125 Hz
8.000(1)	6.700	8.000	7.300	8.000	63 Hz
16.000	14.000	16.000	14.000	16.000	31 Hz

(1) This is the default setting.

Table A.8 Normal DC Input Filter Settings (Inputs 4 and higher)

Nominal Filter Setting (ms)	ON Delay (ms)		OFF Delay (ms)		Maximum Frequency (Hz) 50% Duty Cycle
	Minimum	Maximum	Minimum	Maximum	
0.500	0.090	0.500	0.020	0.500	1.0 kHz
1.000	0.500	1.000	0.400	1.000	0.5 kHz
2.000	1.100	2.000	1.300	2.000	250 Hz
4.000	2.800	4.000	2.700	4.000	125 Hz
8.000(1)	5.800	8.000	5.300	8.000	63 Hz
16.000	11.000	16.000	10.000	16.000	31 Hz

(1) This is the default setting.

Table A.9 Working Voltage (1762-L24AWA, 1762-L40AWA)

Attribute	1762-L24AWA, 1762-L40AWA, 1762-L24AWAR, 1762-L40AWAR
Power supply input to backplane isolation	Verified by one of the following dielectric tests: 1836V ac for 1 second or 2596V dc for 1 second
	265V ac Working Voltage (IEC Class 2 reinforced insulation)
Input group to backplane isolation	Verified by one of the following dielectric tests:1517V ac for 1 second or 2145V dc for 1 second
	132V ac Working Voltage (IEC Class 2 reinforced insulation)
Input group to input group isolation	Verified by one of the following dielectric tests:1517V ac for 1 second or 2145V dc for 1 second
	132V ac Working Voltage (basic insulation)
Output group to backplane isolation	Verified by one of the following dielectric tests: 1836V ac for 1 second or 2596V dc for 1 second
	265V ac Working Voltage (IEC Class 2 reinforced insulation)
Output group to output group isolation	Verified by one of the following dielectric tests: 1836V ac for 1 second or 2596V dc for 1second
	265V ac Working Voltage (basic insulation) 150V ac Working Voltage (IEC Class 2 reinforced insulation).

Table A.10 Working Voltage (1762-L24BWA, 1762-L40BWA, 1762-L24BWAR, 1762-L40BWAR)

Attribute	1762-L24BWA, 1762-L40BWA, 1762-L24BWAR, 1762-L40BWAR
Power supply input to backplane isolation	Verified by one of the following dielectric tests:1836V ac for 1 second or 2596V dc for 1 second
	265V ac Working Voltage (IEC Class 2 reinforced insulation)
Input group to backplane isolation and input group to input group isolation	Verified by one of the following dielectric tests: 1200V ac for 1 second or 1697V dc for 1 second
	75V dc Working Voltage (IEC Class 2 reinforced insulation)
Output group to backplane isolation	Verified by one of the following dielectric tests: 1836V ac for 1 second or 2596V dc for 1 second
	265V ac Working Voltage (IEC Class 2 reinforced insulation).
Output group to output group isolation	Verified by one of the following dielectric tests: 1836V ac for 1 second or 2596V dc for 1 second
	265V ac Working Voltage (basic insulation) 150V Working Voltage (IEC Class 2 reinforced insulation)

Table A.11 Working Voltage (1762-L24BXB, 1762-L40BXB, 1762-L24BXBR, 1762-L40BXBR)

Attribute	1762-L24BXB, 1762-L40BXB, 1762-L24BXBR, 1762-L40BXBR
Input group to backplane isolation and input group to input group isolation	Verified by one of the following dielectric tests: 1200V ac for 1 second or 1697V dc for 1 second
	75V dc Working Voltage (IEC Class 2 reinforced insulation)
FET output group to backplane isolation	Verified by one of the following dielectric tests: 1200V ac for 1 second or 1697V dc for 1 second
	75V dc Working Voltage (IEC Class 2 reinforced insulation)
Relay output group to backplane isolation	Verified by one of the following dielectric tests: 1836V ac for 1 second or 2596V dc for 1 second
	265V ac Working Voltage (IEC Class 2 reinforced insulation).
Relay output group to relay output group and FET output group isolation	Verified by one of the following dielectric tests: 1836V ac for 1 second or 2596V dc for 1 second
	265V ac Working Voltage (basic insulation) 150V Working Voltage (IEC Class 2 reinforced insulation)

Expansion I/O Specifications

Discrete I/O Modules

Table A.12 General Specifications

Attribute	Value
Dimensions	90 mm (height) x 87 mm (depth) x 40.4 mm (width) height including mounting tabs is 110 mm 3.54 in. (height) x 3.43 in. (depth) x 1.59 in. (width) height including mounting tabs is 4.33 in.
Temperature, storage	-40…85 °C (-40…185 °F)
Temperature, operating	-20…65 °C (-4…149 °F)(1)
Operating humidity	5…95% non-condensing
Operating altitude	2000 m (6561 ft)
Vibration	Operating: 10…500 Hz, 5G, 0.030 in. max. peak-to-peak, 2 hours per axis Relay Operation: 1.5G
Shock	Operating: 30G panel mounted, 3 pulses per axis Relay Operation: 7G Non-Operating: 50G panel mounted, 3 pulses per axis (40G DIN Rail mounted)
Agency certification	C-UL certified (under CSA C22.2 No. 142) UL 508 listed CE compliant for all applicable directives C-Tick marked for all applicable acts
Hazardous environment class	For 1762-IQ32T, 1762-OB32T, and 1762-OV32T modules Hazardous Location, Class I, Division 2 Groups A, B, C, D (UL 1604, C-UL under CSA C22.2 No. 213, ANSI/ISA-12.12.01) For all other modules: Hazardous Location, Class I, Division 2 Groups A, B, C, D (UL 1604, C-UL under CSA C22.2 No. 213) for all modules
Radiated and conducted emissions	EN50081-2 Class A
Electrical /EMC:	The module has passed testing at the following levels:
ESD immunity	For 1762-IQ32T, 1762-OB32T, and 1762-OV32T modules IEC61000-4-2: 4 kV contact, 8 kV air, 4 kV indirect For all other modules: IEC1000-4-2: 4 kV contact, 8 kV air, 4 kV indirect
Radiated RF immunity (IEC1000-4-3)	For 1762-IQ32T, 1762-OB32T, and 1762-OV32T modules IEC61000-4-3: 10V/m, 80…2700 MHz, 80% amplitude modulation For all other modules: IEC1000-4-3: 10 V/m, 80…1000 MHz, 80% amplitude modulation, +900 MHz keyed carrier for all modules

Table A.12 General Specifications

Attribute	Value
EFT/B immunity	For 1762-IQ32T, 1762-OB32T, and 1762-OV32T modules IEC61000-4-4: 2 kV, 5 kHz on signal ports For all other modules IEC1000-4-4: 2 kV, 5 kHz
Surge transient immunity	For 1762-IQ32T, 1762-OB32T, and 1762-OV32T modules IEC61000-4-5: 2 kV common mode, 1 kV differential mode For all other modules IEC1000-4-5: 2 kV common mode, 1 kV differential mode
Conducted RF immunity	For 1762-IQ32T, 1762-OB32T, and 1762-OV32T modules IEC61000-4-6: 10V, 0.15…80 MHz(2) For all other modules: IEC1000-4-6: 10V, 0.15…80 MHz(2)

(1) For the exact operating temperature range, refer to the Installation Instructions publication for the specific module.

(2) Conducted Immunity frequency range may be 150 kHz to 30 MHz if the Radiated Immunity frequency range is 30…1000 MHz.

Table A.13 Input Specifications

Attribute	Value			
	1762-IA8	**1762-IQ8**	**1762-IQ16**	**1762-IQ32T**
Shipping weight, approx. (with carton)	209 g (0.46 lbs.)	200 g (0.44 lbs.)	230 g (0.51 lbs.)	200g (0.44 lbs.)
Voltage category	100/120V ac	24V dc (sink/source)(1)	24V dc (sink/source)<secondary footnote>(1)	24V dc (sink/source)(1)
Operating voltage range	79…132V ac at 47…63 Hz	10…30V dc at 30 °C (86 °F) 10…26.4V dc at 55 °C (131 °F)	10…30V dc 10…26.4V dc) (3)(2)	10…30V dc (24 points) at 30 °C (86 °F) 10…26.4V dc (23 points)at 60 °C (140 °F)
Number of inputs	8	8	16	32
Bus current draw, max.	50 mA at 5V dc (0.25 W)	50 mA at 5V dc (0.25 W)	70 mA at 5V dc (0.35 W)(3)	170 mA at 5V dc 0 mA at 24V dc
Heat dissipation, max.	2.0 W	3.7 W	4.3 W at 26.4V 5.4 W at 30V(3)	5.4 W at 26.4V dc 6.8 W at 30V dc
Signal delay, max.	On delay: 20.0 ms Off delay: 20.0 ms	On delay: 8.0 ms Off delay: 8.0 ms	On delay: 8.0 ms Off delay: 8.0 ms	On delay: 8.0 ms Off delay: 8.0 ms
Off-state voltage, max.	20V ac	5V dc	5V dc	5V dc
Off-state current, max.	2.5 mA	1.5 mA	1.5 mA	1.0 mA
On-state voltage, min.	79V ac (min.) 132V ac (max.)	10V dc	10V dc	10V dc

Table A.13 Input Specifications

Attribute	Value			
	1762-IA8	**1762-IQ8**	**1762-IQ16**	**1762-IQ32T**
On-state current, min.	5.0 mA at 79V ac 47 Hz	2.0 mA at 10V dc	2.0 mA at 10V dc	1.6 mA at 10V dc 2.0 mA at 15V dc
On-state current, nom.	12.0 mA at 120V ac 60 Hz	8.0 mA at 24V dc	8.0 mA at 24V dc	-
On-state current, max.	16.0 mA at 132V ac 63 Hz	12.0 mA at 30V dc	12.0 mA at 30V dc	5.7 mA at 26.4V dc 6.5 mA at 30.0V dc
Inrush current, max.	250 mA	Not applicable	Not applicable	Not applicable
Nominal impedance	12K Ω at 50 Hz 10K Ω at 60 Hz	3K Ω	3K Ω	4.7K Ω
Power supply distance rating	6 (The module may not be located more than 6 modules away from the power supply.)			
IEC input compatibility	Type 1+	Type 1+	Type 1+	Type 1
Isolated groups	Group 1: inputs 0 to 7 (internally connected commons)	Group 1: inputs 0 to 7 (internally connected commons)	Group 1: inputs 0 to 7; Group 2: inputs 8 to 15	Group 1: Inputs 0…7; Group 2: Inputs 8…15; Group 3: Inputs 16…23; Group 4: Inputs 24…31
Input group to backplane isolation	Verified by one of the following dielectric tests: 1517V ac for 1 s or 2145V dc for 1 s. 132V ac working voltage (IEC Class 2 reinforced insulation)	Verified by one of the following dielectric tests: 1200V ac for 1 s or 1697V dc for 1 s. 75V dc working voltage (IEC Class 2 reinforced insulation)		Verified by one of the following dielectric tests: 1200V ac for 2 s or 1697V dc for 2 s 75V dc working voltage (IEC Class 2 reinforced insulation)
Vendor I.D. code	1			
Product type code	7			
Product code	114	96	97	99

(1) Sinking/Sourcing Inputs - Sourcing/sinking describes the current flow between the I/O module and the field device. Sourcing I/O circuits supply (source) current to sinking field devices. Sinking I/O circuits are driven by a current sourcing field device. Field devices connected to the negative side (DC Common) of the field power supply are sinking field devices. Field devices connected to the positive side (+V) of the field supply are sourcing field devices.

(2) Refer to Publication 1762-IN10, MicroLogix 1762-IQ16 DC Input Module Installation Instructions, for the derating chart.

(3) Only applicable to Series B I/O modules.

Table A.14 Output Specifications

Specification	1762-OA8	1762-OB8	1762-OB16	1762-OB32T
Shipping weight, approx. (with carton)	215 g (0.48 lbs.)	210 g (0.46 lbs.)	235 g (0.52 lbs.)	200 g (0.44 lbs.)
Voltage category	100…240V ac	24V dc	24V dc	24V dc source
Operating voltage range	85…265V ac at 47 to 63 Hz	20.4…26.4V dc	20.4…26.4V dc	10.2…26.4V dc
Number of outputs	8	8	16	32

Table A.14 Output Specifications

Specification	1762-OA8	1762-OB8	1762-OB16	1762-OB32T
Bus current draw, max.	115 mA at 5V dc (0.575 W)	115 mA at 5V dc (0.575 W)	175 mA at 5V dc (0.88 W)	175 mA at 5V dc 0 mA at 24V dc
Heat dissipation, max.	2.9 W	1.61 W	2.9 W at 30 °C (86 °F) 2.1 W at 55 °C (131 °F)	3.4 W at 26.4 dc
Signal delay, max. – resistive load	On delay: 1/2 cycle Off delay: 1/2 cycle	On delay: 0.1 ms Off delay: 1.0 ms	On delay: 0.1 ms Off delay: 1.0 ms	On delay: 0.5 ms Off delay: 4.0 ms
Off-state leakage, max.	2 mA at 132V, 2.5 mA at 265V	1.0 mA	1.0 mA	0.1 mA at 26.4V dc
On-state current, min.	10 mA	1.0 mA	1.0 mA	1.0 mA
On-state voltage drop, max.	1.5V at 0.5 A	1.0V dc	1.0V dc	0.3V dc at 0.5 A
Continuous current per point, max.	0.25 A at 55 °C (131 °F) 0.5 A at 30 °C (86 °F)	0.5 A at 55 °C (131 °F) 1.0 A at 30°C (86 °F)	0.5 A at 55°C (131 °F) 1.0 A at 30°C (86 °F)	0.5 A at 60 °C (140 °F)
Continuous current per common, max.	1.0 A at 55 °C (131 °F) 2.0 A at 30 °C (86 °F)	4.0A at 55°C (131 °F) 8.0A at 30°C (86°F)	4.0 A at 55°C (131 °F) 8.0 A at 30°C (86 °F)	2.0 A at 60 °C (140 °F)
Continuous current per module, max.	2.0 A at 55°C (131°F) 4.0 A at 30°C (86°F)	4.0 A at 55°C; 8.0 A at 30°C	4.0 A at 55°C (131 °F) 8.0 A at 30°C (86 °F)	4.0 A at 60 °C (140 °F)
Surge current, max.	5.0 A (Repeatability is once every 2 seconds for a duration of 25 ms.)	2.0A (Repeatability is once every 2 seconds at 55 °C (131 °F), once every second at 30 °C (86 °F) for a duration of 10 ms.)	2.0A (Repeatability is once every 2 seconds at 55 °C (131 °F), once every second at 30 °C (86 °F) for a duration of 10 ms.)	2.0 A (Repeatability is once every 2 s at 60 °C (140 °F) for 10 ms.)
Power supply distance rating	6 (The module may not be more than 6 modules away from the power supply.)			
Isolated groups	Group 1: Outputs 0 to 3 Group 2: Outputs 4 to 7	Group 1: Outputs 0 to 7	Group 1: Outputs 0 to 15	Group 1: Outputs 0…15 Group 2: Outputs 16…31 (internally connected to common)
Output group to backplane isolation	Verified by one of the following dielectric tests: 1836V ac for 1 s or 2596V dc for 1 s. 265V ac working voltage (IEC Class 2 reinforced insulation)	Verified by one of the following dielectric tests: 1200V ac for 1 s or 1697V dc for 1 s. 75V dc working voltage (IEC Class 2 reinforced insulation)		Verified by one of the following dielectric tests: 1200V ac for 2 s or 1697V dc for 2 s. 75V dc working voltage (IEC Class 2 reinforced insulation)
Output group to output group isolation	Verified by one of the following dielectric tests: 1836V ac for 1 s or 2596V dc for 1 s. 265V ac working voltage (IEC Class 2 reinforced insulation)	Not applicable		Verified by one of the following dielectric tests: 1200V ac for 2 s or 1697V dc for 2 s. 75V dc working voltage (IEC Class 2 reinforced insulation)

Table A.14 Output Specifications

Specification	1762-OA8	1762-OB8	1762-OB16	1762-OB32T
Vendor I.D. code	1			
Product type code	7			
Product code	119	101	103	100

Table A.15 Output Specifications

Specification	1762-OV32T	1762-OW8	1762-OW16	1762-OX6I
Shipping weight, approx. (with carton)	200 g (0.44 lbs.)	228 g (0.50 lbs.)	285 g (0.63 lbs.)	220 g (0.485 lbs)
Voltage category	24V dc sink	AC/DC normally open relay	AC/DC normally open relay	AC/DC Type C Relay
Operating voltage range	10.2…26.4V dc	5…265V ac 5…125V dc	5…265V ac 5…125V dc	5…265V ac 5…125V dc
Number of outputs	32	8	16	6
Bus current draw, max.	175 mA at 5V dc 0 mA at 24V dc	80 mA at 5V dc (0.40 W) 90 mA at 24V dc (2.16 W)	140 mA at 5V dc (0.70 W) 180 mA at 24V dc (4.32 W)(1)	110 mA at 5V dc (0.55 W) 110 mA at 24V dc (2.64 W)
Heat dissipation, max.	2.7 W at 26.4V dc	2.9 W	6.1 W(1)	2.8 W
Signal delay, max. – resistive load	On delay: 0.5 ms Off delay: 4.0 ms	On delay: 10 ms Off delay: 10 ms	On delay: 10 ms Off delay: 10 ms	On delay: 10 ms (max) 6 ms (typical) Off Delay: 20 ms (max) 12 ms (typical)
Off-state leakage, max.	0.1 mA at 26.4V dc	0 mA	0 mA	0 mA
On-state current, min.	1.0 mA	10 mA	10 mA	100 mA
On-state voltage drop, max.	0.3V dc at 0.5A	Not applicable	Not applicable	Not applicable
Continuous current per point, max.	0.5A at 60 °C (140 °F)	2.5 A (Also see “Relay Contact Ratings” on page A-3.)		7A (Also see “Relay Contact Ratings” on page A-3.)
Continuous current per common, max.	2.0 A at 60 °C (140 °F)	8 A	8A	7A (Also see “Relay Contact Ratings” on page A-3.)
Continuous current per module, max.	4.0 A at 60 °C (140 °F)	16 A	16A	30A (Also see Module Load Ratings 1762-OX6I on page A-14.
Surge current, max.	2.0 A (Repeatability is once every 2 s at 60 °C (140 °F) for 10 ms)	See “Relay Contact Ratings” on page A-3		See “Relay Contact Ratings” on page A-3.
Power supply distance rating	6 (The module may not be more than 6 modules away from the power supply.)			

Table A.15 Output Specifications

Specification	1762-OV32T	1762-OW8	1762-OW16	1762-OX6I
Isolated groups	Group 1: Outputs 0…15 Group 2: Outputs 16…31 (internally connected to common)	Group 1: Outputs 0 to 3 Group 2: Outputs 4 to 7	Group 1: Outputs 0 to 7 Group 2: Outputs 8 to 15	All 6 Outputs Individually Isolated.
Output group to backplane isolation	Verified by one of the following dielectric tests: 1200V ac for 2 s or 1697V dc for 2 s. 75V dc working voltage (IEC Class 2 reinforced insulation)	Verified by one of the following dielectric tests: 1836V ac for 1 s or 2596V dc for 1 s. 265V ac working voltage (IEC Class 2 reinforced insulation)		
Output group to output group isolation	Verified by one of the following dielectric tests: 1200V ac for 2 s or 1697V dc for 2 s. 75V dc working voltage (IEC Class 2 reinforced insulation)	Verified by one of the following dielectric tests: 1836V ac for 1 s or 2596V dc for 1 s. 265V ac working voltage (basic insulation) 150V ac working voltage (IEC Class 2 reinforced insulation)		
Vendor I.D. code	1			
Product type code	7			
Product code	102	120	121	124

(1) Only applicable to Series B I/O modules.

Table A.16 Relay Contact Ratings (1762-OW8 and 1762-OW16)

Maximum Volts	Amperes		Amperes Continuous	Volt-Amperes	
	Make	Break		Make	Break
240V ac	7.5 A	0.75 A	2.5 A(2)	1800VA	180VA
120V ac	15 A	1.5 A	2.5 A(1)	1800VA	180VA
125V dc	0.22 A(1)		1.0 A	28VA	
24V dc	1.2 A(2)		2.0 A		

(1) For dc voltage applications, the make/break ampere rating for relay contacts can be determined by dividing 28 VA by the applied dc voltage. For example, 28VA/48V dc = 0.58 A. For dc voltage applications less than 14 V, the make/break ratings for relay contacts cannot exceed 2 A.

(2) 1.5 A above 40 °C (104 °F).

Table A.17 Relay Contact Ratings 1762-OX6I

Volts (max.)	Amperes(1)		Continuous Amps per Point (max.)(2)	Voltamperes	
	Make	Break		Make	Break
240V ac	15 A	1.5 A	5.0 A	3600VA	360VA
120V ac	30 A	3.0 A	7.0 A(3)		
125V dc	0.4 A		2.5 A	50VA(4)	
24V dc	7.0 A		7.0 A(3)	168VA(4)	

(1) Surge Suppression – Connecting surge suppressors across your external inductive load will extend the life of the relay contacts. For additional details, refer to Industrial Automation Wiring and Grounding Guidelines, publication 1770-4.1.

(2) The continuous current per module must be limited so the module power does not exceed 1440VA.

(3) 6 A in ambient temperatures above 40 °C (104 °F)

(4) DC Make/Break Voltamperes must be limited to 50 VA for DC voltages between 28V dc and 125V dc. DC Make/Break Voltamperes below 28V dc are limited by the 7 A Make/Break current limit.

Table A.18 Module Load Ratings 1762-OX6I

Volts (max.)	Controlled Load (Current) per Module (max.)
240V ac	6 A
120V ac	12 A(1)
125V dc	11.5 A
24V dc	30 A(2)

(1) Current per relay limited to 6 A at ambient temperatures above 40 °C (104 °F).

(2) 24 A in ambient temperatures above 40 °C (104 °F). Limited by ambient temperature and the number of relays controlling loads. See diagram below.

Relays Used vs. Maximum Current per Relay (24V dc) 1762-OX6I

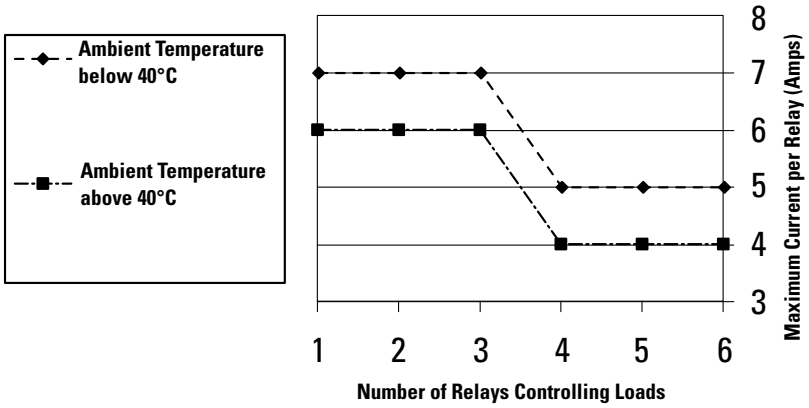

Analog Modules

Table A.19 Analog Modules Common Specifications

Specification	1762-IF2OF2, 1762-IF4, 1762-IR4, 1762-IT4 and 1762-OF4
Dimensions	90 mm (height) x 87 mm (depth) x 40 mm (width), height including mounting tabs is 110 mm 3.54 in. (height) x 3.43 in. (depth) x 1.58 in. (width), height including mounting tabs is 4.33 in.
Temperature, storage	-40…85 °C (-40…185 °F)
Temperature, operating	-20…65 °C (-4…149 °F)(1)
Operating humidity	5…95% non-condensing
Operating altitude	2000 m (6561 ft)
Vibration	Operating: 10…500 Hz, 5G, 0.030 in. max. peak-to-peak
Shock	Operating: 30G
Module power LED	On: indicates power is applied.
Recommended cable	Belden 8761 (shielded) (For 1762-IT4, Shielded thermocouple extension wire for the specific type of thermocouple you are using. Follow thermocouple manufacturer's recommendations.)
Agency certification	C-UL certified (under CSA C22.2 No. 142) UL 508 listed CE compliant for all applicable directives C-Tick marked for all applicable acts (1762-IR4 and 1762-IT4)
Hazardous environment class	Class I, Division 2, Hazardous Location, Groups A, B, C, D (UL 1604, C-UL under CSA C22.2 No. 213)
Noise immunity	NEMA standard ICS 2-230
Radiated and conducted emissions	EN50081-2 Class A
Electrical/EMC:	The module has passed testing at the following levels:
ESD immunity (IEC1000-4-2)	4 kV contact, 8 kV air, 4 kV indirect
Radiated RF immunity (IEC1000-4-3)	10 V/m, 80…1000 MHz, 80% amplitude modulation, +900 MHz keyed carrier
EFT/B immunity (IEC1000-4-4)	2 kV, 5 kHz
Surge transient immunity (IEC1000-4-5)	1 kV galvanic gun
Conducted RF immunity (IEC1000-4-6)	10 V, 0.15…80 MHz(2) (3)

(1) Refer to the module's Installation Instruction for exact operating temperature range.

(2) Conducted Immunity frequency range may be 150 kHz to 30 MHz if the Radiated Immunity frequency range is 30 MHz to 1000 MHz.

(3) For grounded thermocouples, the 10 V level is reduced to 3V.

Table A.20 General Specifications for Analog Modules

Specification	1762-IF2OF2	1762-IF4	1762-OF4	1762-IR4	1762-IT4
Shipping weight, approx. (with carton)	240 g (0.53 lbs.)		235 g (0.517 lbs.)	260 g (0.57 lbs.)	220 g (0.53 lbs.)
Bus current draw, max.	40 mA at 5V dc 105 mA at 24V dc	40 mA at 5V dc 50 mA at 24V dc	40 mA at 5V dc 165 mA at 24V dc	40 mA at 5V dc 50 mA at 24V dc	40 mA at 5V dc 50 mA at 24V dc
Analog normal operating range	Voltage: 0…10V dc Current: 4…20 mA	Voltage: -10…+10V dc Current: 4… 20 mA	Voltage 0…10V dc Current: 4…20 mA	NA	NA
Full scale(1) analog ranges	Voltage: 0…10.5V dc Current: 0…21 mA	Voltage: -10.5…+10.5V dc Current: -21…+21 mA	Voltage: 0…10.5V dc Current: 0…21 mA	NA	NA
Resolution	12 bits (unipolar)	15 bits (bipolar)(4)	12 bits (unipolar)	Input filter and configuration dependent	15 bits plus sign
Repeatability(2)	±0.12%(4)	±0.12%(4)	±0.12%(4)	±0.1 °C (±0.18 °F) for Ni and NiFe ±0.2 °C (±0.36 °F) … ±0.2 °C (±0.36 °F) for other RTD inputs ±0.04 ohm for 150 ohm resistances ±0.2 ohm for other resistances	See Table A.24 on page A-20.
Input and output group to system isolation	30V ac/30V dc rated working voltage(3) (N.E.C. Class 2 required) (IEC Class 2 reinforced insulation) type test: 500V ac or 707V dc for 1 minute		30V ac/30V dc rated working voltage (IEC Class 2 reinforced insulation) type test: 500V ac or 707V dc for 1 minute	30V ac/30V dc working voltage type test: 500V ac or 707V dc for 1 minute	30V ac/30V dc working voltage qualification test: 720V dc for 1 minute
Vendor I.D. code	1	1	1	1	1
Product type code	10	10	10	10	10
Product code	75	67	66	65	64

(1) The over- or under-range flag comes on when the normal operating range (over/under) is exceeded. The module continues to convert the analog input up to the maximum full scale range.

(2) Repeatability is the ability of the module to register the same reading in successive measurements for the same signal.

(3) Rated working voltage is the maximum continuous voltage that can be applied at the terminals with respect to earth ground.

(4) Only applicable to Series B I/O modules.

Table A.21 Input Specifications

Specification	1762-IF2OF2	1762-IF4	1762-IR4	1762-IT4
Number of inputs	2 differential (unipolar)	4 differential (bipolar)	4	4 input channels plus 1 CJC sensor
Update time (typical)	2.5 ms	130, 250, 290, 450, 530 ms (selectable)	Input filter and configuration dependent	NA
A/D converter type	Successive approximation	Successive approximation	Delta-Sigma	Delta-Sigma
Common mode voltage range(1)	±27 V	±27 V	NA	±10 V
Common mode rejection(2)	> 55 dB at 50 and 60 Hz	> 55 dB at 50 and 60 Hz	>110 dB at 50 Hz (with 10 or 50 Hz filter) >110 dB at 60 Hz (with 10 or 60 Hz filter)	>110 dB at 50 Hz (with 10 or 50 Hz filter) >110 dB at 60 Hz (with 10 or 60 Hz filter)
Non-linearity (in percent full scale)	±0.12% (4)	±0.12% (4)	±0.05%	NA
Typical overall accuracy(3)	±0.55% full scale at -20…65 °C (-4 …149 °F)(4) ±0.3% full scale at 25 °C (77 °F)	±0.32% full scale at -20…65 °C (-4 …149 °F)(4) ±0.24% full scale at 25 °C (77 °F)	±0.5 °C (32.9 °F) for Pt 385	NA
Input impedance	Voltage Terminal: 200 kΩ Current Terminal: 250 Ω	Voltage Terminal: 200 kΩ Current Terminal: 275 Ω	>10 MΩ	>10 MΩ
Current input protection	±32 mA	±32 mA	NA	NA
Voltage input protection	±30 V	±30 V	NA	NA
Channel diagnostics	Over or under range or open circuit condition by bit reporting for analog inputs.	Over or under range or open circuit condition by bit reporting for analog inputs.	Over or under range or open circuit condition by bit reporting for analog inputs.	Over or under range or open circuit condition by bit reporting for analog inputs.

(1) For proper operation, both the plus and minus input terminals must be within ±27V (±10V for 1762-IT4) of analog common.

(2) Vcm = 1 Vpk-pk AC

(3) Vcm = 0 (includes offset, gain, non-linearity and repeatability error terms)

(4) Only applicable to Series B I/O modules.

Table A.22 Input Specifications 1762-IR4

Specification	1762-IR4
Input types	• 100 Ω Platinum 385 • 200 Ω Platinum 385 • 500 Ω Platinum 385 • 1000 Ω Platinum 385 • 100 Ω Platinum 3916 • 200 Ω Platinum 3916 • 500 Ω Platinum 3916 • 1000 Ω Platinum 3916 • 10 Ω Copper 426 • 120 Ω Nickel 672 • 120 Ω Nickel 618 • 604 Ω Nickel-Iron 518 • 0…150 Ω • 0…500 Ω • 0…1000 Ω • 0…3000 Ω
Heat dissipation	1.5 Total Watts (The Watts per point, plus the minimum Watts, with all points enabled.)
Normal mode rejection ratio	70 dB minimum at 50 Hz with the 10 or 50 Hz filter selected 70 dB minimum at 60 Hz with the 10 or 60 Hz filter selected
Typical accuracy [Autocalibration enabled] at 25 °C (77 °F) ambient with module operating temperature at 25 °C (77 °F) (1)	±0.5 °C (32.9 °F) for Pt 385 ±0.4 °C (32.72 °F) for Pt 3916 ±0.2 °C (32.36 °F) for Ni ±0.3 °C (32.54 °F) for NiFe ±0.6 °C (33.08 °F) for Cu ±0.15 Ω for 150 Ω range ±0.5 Ω for 500 Ω range ±1.0 Ω for 1000 Ω range ±1.5 Ω for 3000 Ω range
Typical accuracy [Autocalibration enabled] at 0…55 °C (32…131 °F)(1)	±0.9 °C (33.62 °F) for Pt 385 ±0.8 °C (33.44 °F) for Pt 3916 ±0.4 °C (32.72 °F) for Ni ±0.5 °C (32.9 °F) for NiFe ±1.1 °C (33.98 °F) for Cu ±0.25 Ω for 150 Ω range ±0.8 Ω for 500 Ω range ±1.5 Ω for 1000 Ω range ±2.5 Ω for 3000 Ω range
Accuracy drift at 0…55 °C (32…131 °F)	±0.026 °C/°C (0.026 °F/°F) for Pt 385 ±0.023 °C/°C (0.023 °F/°F) for Pt 3916 ±0.012 °C/°C (0.012 °F/°F) for Ni ±0.015 °C/°C (0.015 °F/°F) for NiFe ±0.032 °C/°C (0.032 °F/°F) for Cu ±0.007 Ω/°C (0.012 Ω/°F) for 150 Ω range ±0.023 Ω/°C (0.041 Ω/°F) for 500 Ω range ±0.043 Ω/°C (0.077 Ω/°F) for 1000 Ω range ±0.072 Ω/°C (0.130 Ω/°F) for 3000 Ω range
Excitation current source	0.5 mA and 1.0 mA selectable per channel
Open-circuit detection time(2)	6…1212 ms
Input channel configuration	Via configuration software screen or the user program (by writing a unique bit pattern into the module's configuration file). Refer to your controller's user manual to determine if user program configuration is supported.
Calibration	The module performs autocalibration on channel enable and on a configuration change between channels. You can also program the module to calibrate every five minutes.
Maximum overload at input terminals	±35V dc continuous
Cable impedance, max.	25 Ω (Operating with >25 Ω will reduce accuracy.)
Power supply distance rating	6 (The module may not be more than 6 modules away from the system power supply.)
Channel to channel isolation	±10V dc

(1) Accuracy is dependent upon the Analog/Digital converter filter rate selection, excitation current selection, data format, and input noise.

(2) Open-circuit detection time is equal to channel update time.

Table A.23 Input Specifications 1762-IT4

Specification	Value
Heat dissipation	1.5 Total Watts (The Watts per point, plus the minimum Watts, with all points energized.)
Response speed per channel	Input filter and configuration dependent.
Rated working voltage(1)	30V ac/30V dc
Normal mode rejection ratio	85 dB (minimum) at 50 Hz (with 10 Hz or 50 Hz filter) 85 dB (minimum) at 60 Hz (with 10 Hz or 60 Hz filter)
Maximum cable impedance	25 Ω (for specified accuracy)
Open-circuit detection time	7 ms to 1.515 seconds(2)
Calibration	The module performs autocalibration upon power-up and whenever a channel is enabled. You can also program the module to calibrate every five minutes.
CJC accuracy	±1.3 °C (±2.34 °F)
Maximum overload at input terminals	±35V dc continuous(3)
Input channel configuration	via configuration software screen or the user program (by writing a unique bit pattern into the module's configuration file).

(1) Rated working voltage is the maximum continuous voltage that can be applied at the input terminal, including the input signal and the value that floats above ground potential (for example, 30V dc input signal and 20V dc potential above ground).

(2) Open-circuit detection time is equal to the module scan time, which is based on the number of enabled channels, the filter frequency of each channel, and whether cyclic calibration is enabled.

(3) Maximum current input is limited due to input impedance.

Table A.24 1762-IT4 Repeatability at 25°C (77°F)(1) (2)

Input Type	Repeatability for 10 Hz Filter
Thermocouple J	±0.1 °C [±0.18 °F]
Thermocouple N (-110…1300 °C [-166…2372 °F])	±0.1 °C [±0.18 °F]
Thermocouple N (-210…110 °C [-346…166 °F])	±0.25 °C [±0.45 °F]
Thermocouple T (-170…400 °C [-274…752 °F])	±0.1 °C [±0.18 °F]
Thermocouple T (-270…170 °C [-454…274 °F])	±1.5 °C [±2.7 °F]
Thermocouple K (-270…1370 °C [-454…2498 °F])	±0.1 °C [±0.18 °F]
Thermocouple K (-270…170 °C [-454…274 °F])	±2.0 °C [±3.6 °F]
Thermocouple E (-220…1000 °C [-364…1832 °F])	±0.1 °C [±0.18 °F]
Thermocouple E (-270…220 °C [-454…364 °F])	±1.0 °C [±1.8 °F]
Thermocouples S and R	±0.4 °C [±0.72 °F]
Thermocouple C	±0.2 °C [±0.36 °F]
Thermocouple B	±0.7 °C [±1.26 °F]
±50 mV	±6 µV
±100 mV	±6 µV

(1) Repeatability is the ability of the input module to register the same reading in successive measurements for the same input signal.

(2) Repeatability at any other temperature in the 0 to 60°C (32 to 140°F) range is the same as long as the temperature is stable.

Table A.25 1762-IT4 Accuracy

Input Type[1]	With Autocalibration Enabled		Without Autocalibration
	Accuracy[2] [3] for 10 Hz, 50 Hz and 60 Hz Filters (max.)		Maximum Temperature Drift[2] [4]
	at 25 °C [77 °F] Ambient	at 0 to 60 °C [32 to 140 °F] Ambient	at 0 to 60 °C [32 to 140 °F] Ambient
Thermocouple J (-210…1200 °C [-346…2192 °F])	±0.6 °C [±1.1 °F]	±0.9 °C [±1.7 °F]	±0.0218 °C/°C [±0.0218 °F/°F]
Thermocouple N (-200…1300 °C [-328…2372 °F])	±1 °C [±1.8 °F]	±1.5 °C [±2.7 °F]	±0.0367 °C/°C [±0.0367 °F/°F]
Thermocouple N (-210…-200 °C [-346…-328 °F])	±1.2 °C [±2.2 °F]	±1.8 °C [±3.3 °F]	±0.0424 °C/°C [±0.0424 °F/°F]
Thermocouple T (-230…400 °C [-382…752 °F])	±1 °C [±1.8 °F]	±1.5 °C [±2.7 °F]	±0.0349 °C/°C [±0.0349 °F/°F]
Thermocouple T (-270…-230 °C [-454…-382 °F])	±5.4 °C [±9.8 °F]	±7.0 °C [±12.6 °F]	±0.3500 °C/°C [±0.3500 °F/°F]
Thermocouple K (-230…1370 °C [-382…2498 °F])	±1 °C [±1.8 °F]	±1.5 °C [±2.7 °F]	±0.4995 °C/°C [±0.4995 °F/°F]
Thermocouple K (-270…-225°C [-454…-373°F])	±7.5°C [±13.5°F]	±10°C [±18 °F]	±0.0378°C/°C [±0.0378°F/°F]
Thermocouple E (-210…1000°C [-346…1832°F])	±0.5°C [±0.9°F]	±0.8°C [±1.5 °F]	±0.0199°C/°C [±0.0199°F/°F]
Thermocouple E (-270…-210 °C [-454…-346 °F])	±4.2 °C [±7.6 °F]	±6.3 °C [±11.4 °F]	±0.2698 °C/°C [±0.2698 °F/°F]
Thermocouple R	±1.7 °C [±3.1 °F]	±2.6 °C [±4.7 °F]	±0.0613 °C/°C [±0.0613 °F/°F]
Thermocouple S	±1.7 °C [±3.1 °F]	±2.6 °C [±4.7 °F]	±0.0600 °C/°C [±0.0600 °F/°F]
Thermocouple C	±1.8 °C [±3.3 °F]	±3.5 °C [±6.3 °F]	±0.0899 °C/°C [±0.0899 °F/°F]
Thermocouple B	±3.0 °C [±5.4 °F]	±4.5 °C [±8.1 °F]	±0.1009 °C/°C [±0.1009 °F/°F]
±50 mV	±15 µV	±25 µV	±0.44µV/°C [±0.80µV/°F]
±100 mV	±20 µV	±30 µV	±0.69µV/°C [±01.25µV/°F]

(1) The module uses the National Institute of Standards and Technology (NIST) ITS-90 standard for thermocouple linearization.

(2) Accuracy and temperature drift information does not include the affects of errors or drift in the cold junction compensation circuit.

(3) Accuracy is dependent upon the analog/digital converter output rate selection, data format, and input noise.

(4) Temperature drift with autocalibration is slightly better than without autocalibration.

TIP For more detailed 1762-IT4 accuracy information, see publication 1762-UM002.

Table A.26 Output Specifications

Specification	1762-IF2OF2	1762-OF4
Number of outputs	2 single-ended (unipolar)	4 single-ended (unipolar)(2)
Update time (typical)	4.5 ms	
D/A converter type	Resistor string	R-2R Ladder Voltage Switching
Resistive load on current output	0…500 Ω (includes wire resistance)	0…500 Ω (includes wire resistance)
Load range on voltage output	> 1 kΩ	> 1 kΩ
Reactive load, current output	< 0.1 mH	< 0.1 mH
Reactive load, voltage output	< 1 μF	< 1 μF
Typical overall accuracy(1)	±1.17% full scale at -20…65 °C (-4…149 °F)(2) ±0.5% full scale at 25 °C (77 °F)	±1.17% full scale at -20…65 °C (-4…149 °F)(2) ±0.5% full scale at 25 °C (77 °F)
Output ripple range 0 to 500 Hz (referred to output range)	< ±0.1%	< ±0.1%
Non-linearity (in percent full scale)	< ±0.59%(2)	< ±0.59%(2)
Open and short-circuit protection	Continuous	Continuous
Output protection	±32 mA	±32 mA
Heat dissipation	2.6 W	2.8 W

(1) Includes offset, gain, non-linearity and repeatability error terms.

(2) Only applicable to Series B I/O modules.

Table A.27 Valid Input/Output Data Word Formats/Ranges for 1762-IF2OF2

Normal Operating Range	Full Scale Range	RAW/Proportional Data	Scaled-for-PID
0…0V dc	10.5V dc	32760	16380
	0.0V dc	0	0
4… 20 mA	21.0 mA	32760	16380
	20.0 mA	31200	15600
	4.0 mA	6240	3120
	0.0 mA	0	0

Combination Module DC-Input/Relay Output

Table A.28 DC-Input/Relay-Output Combination Module - 1762-IQ80W6 Input Specifications

Specification	Value
Voltage category	24V dc (Sink/Source)(1)
Operating voltage range	10…30V dc @ 30 °C (86 °F) 10…26.4V dc @ 65 °C (149 °F)
Number of inputs	8
On-state voltage, min.	10V dc
Off-state voltage, max.	5V dc
On-state current, min.	2.0 mA
Off-state current, max.	1.5 mA
Inrush current, max.	250 mA
Nominal impedance	3 kΩ
Input compatibility	IEC Type 1+
Signal delay time, max.	On-delay: 8 ms Off-delay: 8 ms

(1) Sinking/Sourcing Inputs - Sinking/Sourcing describes the current flow between the I/O module and the field device. Sourcing I/O circuits supply (source) current to sinking field devices. Sinking I/O circuits are driven by a current sourcing field device. Field devices connected to the negative side (DC Common) of the field power supply are sinking field devices. Field devices connected to the positive side (+V) of the field supply are sourcing field devices.

Table A.29 DC-Input/Relay-Output Combination Module - 1762-IQ80W6 Output Specifications

Specification	Value
Voltage range	5…265V ac 5…125V dc
Commons per module	6
Output type	6-Form A (normally open)
Signal delay time	On-delay: 10 mS (max) Off-delay: 10 mS (max)
Off leakage current	0 mA
On-state current, min.	10 mA @ 5V dc
Continuous current per point	See table on page A-24.
Continuous current per module	8 A
Total controlled load	1440VA/Module max

Table A.30 DC-Input/Relay-Output Combination Module - 1762-IQ80W6 Relay Contact Ratings

Volts (max.)	Continuous Amps per Point (Max.)	Amperes(1)		Voltamperes	
		Make	Break	Make	Break
240V ac	2.5 A	7.5 A	0.75 A	1800VA	180VA
120V ac		15 A	1.5 A		
125V dc	1.0 A	0.22 A(2)		28VA(2)	
24V dc	2.0 A	1.2 A		28VA(2)	

(1) Surge Suppression - Connecting surge suppressors across your external inductive load will extend the life of the relay contacts. For additional details, refer to Industrial Automation Wiring and Grounding Guidelines, publication 1770-4.1.

(2) For dc voltage applications, the make/break ampere rating for relay contacts can be determined by dividing 28VA by the applied dc voltage. For example, 28VA/48V dc = 0.58 A. For dc voltage applications less than 14 V, the make/break rating for relay contacts cannot exceed 2 A.

Table A.31 DC-Input/Relay-Output Combination Module - 1762-IQ80W6 General Specifications

Specification	Value
Dimensions	90 mm (height) x 87 mm (depth) x 40.4 mm (width) height including mounting tabs is 110 mm 3.54 in. (height) x 3.43 in. (depth) x 1.59 in. (width) height including mounting tabs is 4.33 in.
Shipping weight, approx. (with carton)	280 g (0.62 lbs.)
Bus current draw, max.	110 mA @ 5V dc 80 mA @ 24V dc
Heat dissipation	5.0 W @ 30V dc 4.4 W @ 26.4V dc (The Watts per point, plus the minimum W, with all points energized.)
Power supply distance rating	6
Isolated group	Group 1 (input 0…3) Group 2 (input 4…7) Group 3 (output 0…5)
Vibration	Operating: 10 to 500 Hz, 5G, 0.030 in. max. peak-to-peak, 2 hours per axis. Relay Operation: 1.5 G
Shock	Operating: 30G panel mounted, 3 pulses per axis Relay Operation: 7G Non-Operating: 50G panel mounted, 3 pulses per axis (40G DIN Rail mounted)

Table A.31 DC-Input/Relay-Output Combination Module - 1762-IQ80W6 General Specifications

Specification	Value
Vendor ID code	1
Product type code	7
Product code	98

Table A.32 DC-Input/Relay-Output Combination Module - 1762-IQ80W6 Environmental Specifications

Specification	Value
Temperature range, operating	-20…+65 °C (-4…+149 °F)
Temperature range, storage	-40…+85 °C (-40…+185 °F)
Operating humidity	5…95% non-condensing
Operating altitude	2000 m (6561 ft)

Table A.33 Certifications

Certification	Value
Agency certification	C-UL certified (under CSA C22.2 No. 142) UL 508 listed CE compliant for all applicable directives
Hazardous environment class	Class I, Division 2, Hazardous Location, Groups A, B, C, D (UL 1604, C-UL under CSA C22.2 No. 213)
Radiated and conducted emissions	EN50081-2 Class A
Electrical/EMC:	The module has passed testing at the following levels:
ESD immunity (IEC1000-4-2)	4 kV contact, 8 kV air, 4 kV indirect
Radiated RF immunity (IEC1000-4-3)	10 V/m, 80…1000 MHz, 80% amplitude modulation, +900 MHz keyed carrier
EFT/B immunity (IEC1000-4-4)	2 kV, 5 kHz
Surge transient immunity (IEC1000-4-5)	2 kV common mode, 1 kV differential mode
Conducted RF immunity (IEC1000-4-6)	10V, 0.15…80 MHz(1)

(1) Conducted Immunity frequency range may be 150 kHz to 30 MHz if the Radiated Immunity frequency range is 30…1000 MHz.

Notes:

1762 Replacement Parts

MicroLogix 1200 RTB Replacement Kit

The 40-point controller removable terminal blocks kit (catalog number 1762-RPLRTB40) consists of:

- one 25-point double row terminal block
- one 29-point double row terminal block

(Both are terminal blocks for a 40-point controller.)

Notes:

Troubleshoot Your System

This chapter describes how to troubleshoot your controller. Topics include:

- understanding the controller LED status
- controller error recovery model
- analog expansion I/O diagnostics and troubleshooting
- calling Rockwell Automation for assistance

Interpret LED Indicators

The controller status LEDs provide a mechanism to determine the current status of the controller if a programming device is not present or available.

Figure C.1 Controller LED Location

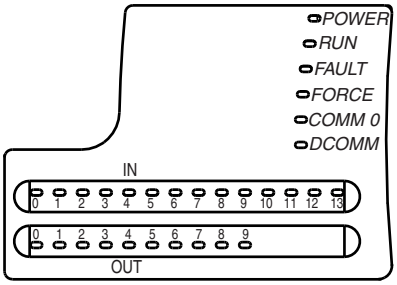

Table C.1 Controller LED Indicators

LED	Color	Indicates
POWER	off	No input power, or power error condition
	green	Power on
RUN	off	Not executing the user program
	green	Executing the user program in run mode
	green flashing	Memory module transfer occurring
FAULT	off	No fault detected
	red flashing	Application fault detected
	red	Controller hardware faulted
FORCE	off	No forces installed
	amber	Forces installed
COMM 0(1)	off	Not transmitting via RS-232 port
	green	Transmitting via RS-232 port
DCOMM(2)	off	Configured communications
	green	Default communications
INPUTS	off	Input is not energized
	amber	Input is energized (terminal status)
OUTPUTS	off	Output is not energized
	amber	Output is engerized (logic status)

(1) 1762-L24AWAR, -L24BWAR, -L24BXBR, -L40AWAR, -L40BWAR, -L40BXBR controllers are equipped with an additional communications port (Programmer/HMI Port) but provide no additional LED indictor indicating its operational status.

(2) When using a 1762-L24AWAR, -L24BWAR, -L24BXBR, -L40AWAR, -L40BWAR, or -L40BXBR controller, the DCOMM LED applies only to Channel 0.

Normal Operation

The POWER and RUN LEDs are on. If a force condition is active, the FORCE LED turns on and remains on until all forces are removed.

Error Conditions

If an error exists within the controller, the controller LEDs operate as described in the following table.

If the LEDS indicate	The Following Error Exists	Probable Cause	Recommended Action
All LEDs off	No input power or power supply error	No line Power	Verify proper line voltage and connections to the controller.
		Power Supply Overloaded	This problem can occur intermittently if power supply is overloaded when output loading and temperature varies.
Power and FAULT LEDs on solid	Hardware faulted	Processor Hardware Error	Cycle power. Contact your local Allen-Bradley representative if the error persists.
		Loose Wiring	Verify connections to the controller.
Power LED on and FAULT LED flashing	Application fault	Hardware/Software Major Fault Detected	For error codes and Status File information, see MicroLogix 1200 and 1500 Programmable Controllers Instruction Set Reference Manual, Publication 1762-RM001.
RUN FORCE FAULT LEDs all flashing	Operating system fault	Missing or Corrupt Operating System	See Missing/Corrupt OS LED Pattern on page D-2.

Controller Error Recovery Model

Use the following error recovery model to help you diagnose software and hardware problems in the micro controller. The model provides common questions you might ask to help troubleshoot your system. Refer to the recommended pages within the model for further help.

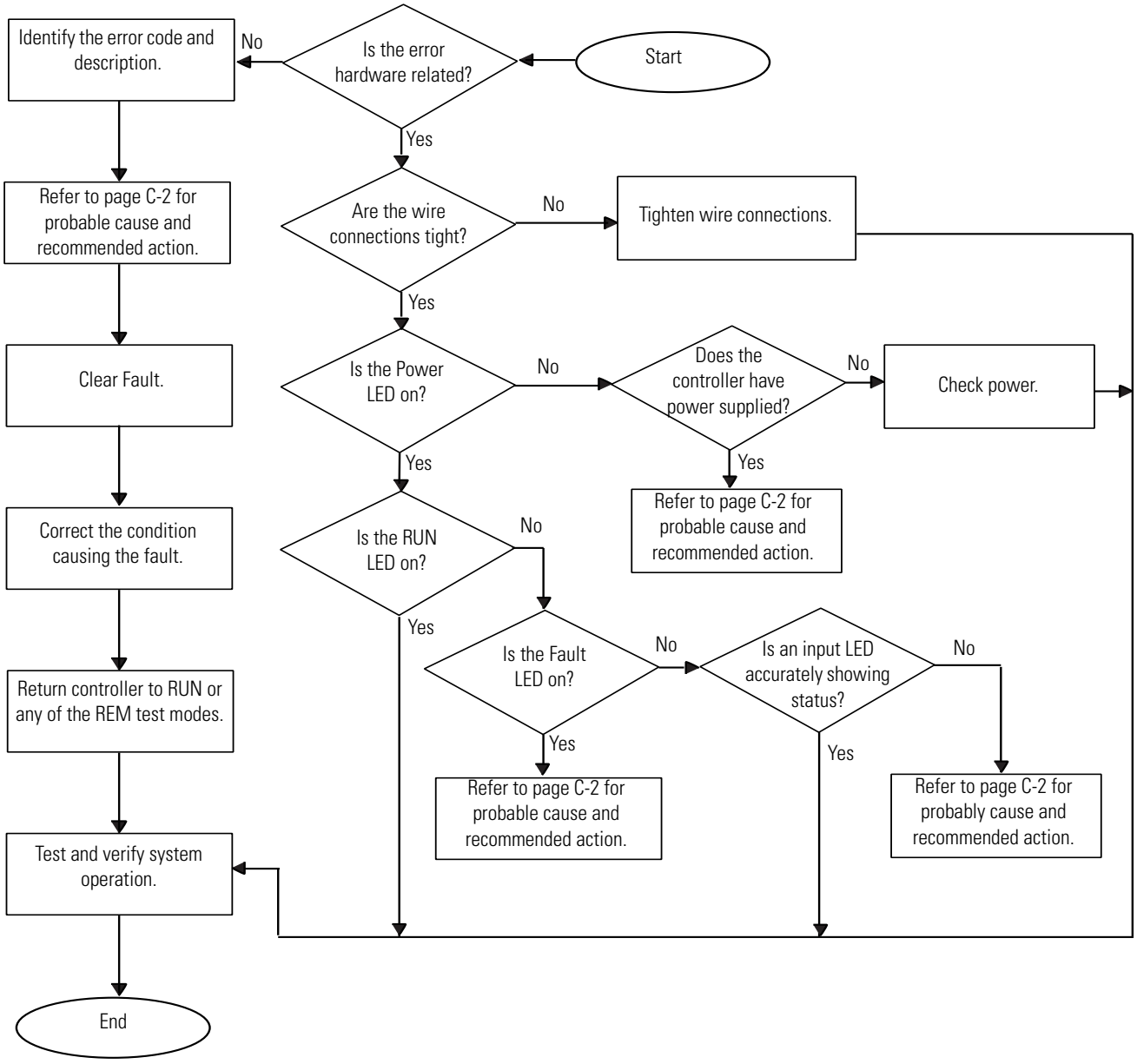

Analog Expansion I/O Diagnostics and Troubleshooting

Module Operation and Channel Operation

The module performs operations at two levels:

- module level
- channel level

Module-level operations include functions such as power-up, configuration, and communication with the controller.

Internal diagnostics are performed at both levels of operation. Both module hardware and channel configuration error conditions are reported to the controller. Channel over-range or under-range conditions are reported in the module's input data table. Module hardware errors are reported in the controller's I/O status file. Refer to the MicroLogix 1200 and 1500 Programmable Controllers Instruction Set Reference Manual, publication 1762-RM001 for more information.

When a fault condition is detected, the analog outputs are reset to zero.

Power-up Diagnostics

At module power-up, a series of internal diagnostic tests are performed.

Table C.2 Module Status LED State Table

If module status LED is	Indicated condition	Corrective action
On	Proper Operation	No action required.
Off	Module Fault	Cycle power. If condition persists, replace the module. Call your local distributor or Allen-Bradley for assistance.

Critical and Noncritical Errors

Noncritical module errors are recoverable. Channel errors (over-range or under-range errors) are noncritical. Noncritical error conditions are indicated in the module input data table. Noncritical configuration errors are indicated by the extended error code.

See Table C.5 on page C-7.

Critical module errors are conditions that prevent normal or recoverable operation of the system. When these types of errors occur, the system leaves the run mode of operation.

Critical module errors are indicated in Table C.5 on page C-7.

Module Error Definition Table

Analog module errors are expressed in two fields as four-digit Hex format with the most significant digit as 'don't care' and irrelevant. The two fields are 'Module Error' and 'Extended Error Information'. The structure of the module error data is shown below.

Table C.3 Module Error Table

'Don't Care' Bits				Module Error			Extended Error Information								
15	**14**	**13**	**12**	**11**	**10**	**9**	**8**	**7**	**6**	**5**	**4**	**3**	**2**	**1**	**0**
0	0	0	0	0	0	0	0	0	0	0	0	0	0	0	0
Hex Digit 4				**Hex Digit 3**				**Hex Digit 2**				**Hex Digit 1**			

Module Error Field

The purpose of the module error field is to classify module errors into three distinct groups, as described in the table below. The type of error determines what kind of information exists in the extended error information field. These types of module errors are typically reported in the controller's I/O status file. Refer to the MicroLogix 1200 and 1500 Programmable Controllers Instruction Set Reference Manual, publication 1762-RM001 for more information.

.

Table C.4 Module Error Types

Error Type	Module Error Field Value Bits 11 through 09 (Binary)	Description
No Errors	000	No error is present. The extended error field holds no additional information.
Hardware Errors	001	General and specific hardware error codes are specified in the extended error information field.
Configuration Errors	010	Module-specific error codes are indicated in the extended error field. These error codes correspond to options that you can change directly. For example, the input range or input filter selection.

Extended Error Information Field

Check the extended error information field when a non-zero value is present in the module error field. See Table C.5 on page C-7.

TIP If no errors are present in the module error field, the extended error information field is set to zero.

Hardware Errors

General or module-specific hardware errors are indicated by module error code 2. See Table C.5.

Configuration Errors

If you set the fields in the configuration file to invalid or unsupported values, the module ignores the invalid configuration, generates a non-critical error, and keeps operating with the previous configuration.

The table below lists the configuration error codes defined for the module.

Error Codes

Table C.5 Extended Error Codes for 1762-IF2OF2

Error Type	Hex Equivalent(1)	Module Error Code	Extended Error Information Code	Error Description
		Binary	Binary	
No Error	X000	000	0 0000 0000	No error
General Common Hardware Error	X200	001	0 0000 0000	General hardware error; no additional information
	X201	001	0 0000 0001	Power-up reset state
Hardware-Specific Error	X210	001	0 0001 0000	Reserved
Configuration Error	X400	010	0 0000 0000	General configuration error; no additional information
	X401	010	0 0000 0001	Invalid input data format selected (channel 0)
	X402	010	0 0000 0010	Invalid input data format selected (channel 1)
	X403	010	0 0000 0011	Invalid output data format selected (channel 0)
	X404	010	0 0000 0100	Invalid output data format selected (channel 1)

(1) X represents 'Don't Care'.

Table C.6 Extended Error Codes for 1762-IF4 and 1762-OF4

Error Type	Hex Equivalent(1)	Module Error Code	Extended Error Information Code	Error Description
		Binary	Binary	
No Error	X000	000	0 0000 0000	No error
General Common Hardware Error	X200	001	0 0000 0000	General hardware error; no additional information
	X201	001	0 0000 0001	Power-up reset state
Hardware-Specific Error	X300	001	1 0000 0000	Reserved
Configuration Error	X400	010	0 0000 0000	General configuration error; no additional information
	X401	010	0 0000 0001	Invalid range select (Channel 0)
	X402	010	0 0000 0010	Invalid range select (Channel 1)
	X403	010	0 0000 0011	Invalid range select (Channel 2)
	X404	010	0 0000 0100	Invalid range select (Channel 3)
	X405	010	0 0000 0101	Invalid filter select (Channel 0) – 1762-IF4 only
	X406	010	0 0000 0110	Invalid filter select (Channel 1) – 1762-IF4 only
	X407	010	0 0000 0111	Invalid filter select (Channel 2) – 1762-IF4 only
	X408	010	0 0000 1000	Invalid filter select (Channel 3) – 1762-IF4 only
	X409	010	0 0000 1001	Invalid format select (Channel 0)
	X40A	010	0 0000 1010	Invalid format select (Channel 1)
	X40B	010	0 0000 1011	Invalid format select (Channel 2)
	X40C	010	0 0000 1100	Invalid format select (Channel 3)

(1) X represents 'Don't Care'.

Call Rockwell Automation for Assistance

If you need to contact Rockwell Automation or local distributor for assistance, it is helpful to obtain the following (prior to calling):

- controller type, series letter, revision letter, and firmware (FRN) number of the controller
- controller LED status
- controller error codes (Refer to MicroLogix 1200 and 1500 Programmable Controllers Instruction Set Reference Manual, Publication 1762-RM001 for error code information.)

Use Control Flash to Upgrade Your Operating System

The operating system (OS) can be upgraded through the communication port on the controller. In order to download a new operating system, you must have the following:

- ControlFlash Upgrade Kit containing the new OS
  Go to http://www.ab.com/micrologix to download the upgrade kit.
- a Windows 95, Windows 98, Windows 2000 or
  Windows NT based computer to run the download software.

The ControlFlash Upgrade Kit includes:

- the operating system upgrade to be downloaded
- the ControlFlash programming tool, along with its support drivers and on-line help
- a readme first file explaining how to upgrade the operating system

Prepare for Upgrade

Before upgrading the controller's operating system, you must:

- install ControlFlash software on your personal computer
- prepare the controller for updating

IMPORTANT Installing a new operating system deletes the user program. After the operating system upgrade is successful, you must transfer your control program back to the controller. The communication parameters are described on Table 4.1 on page 4-2.

Install ControlFlash Software

For 1762-Lxxxxx controllers, double click the 1762-LSC-FRNxx.exe file to install the operating system upgrade (where xx is the firmware revision number).

For 1762-LxxxxxR controllers, double click the 1762-LRC-FRNxx.exe file to install the operating system upgrade.

Prepare the Controller for Updating

Controller Configuration

The controller must be configured for default communications (use communications toggle push button; DCOMM LED on) and be in the Program mode to allow the download of a new operating system.

Sequence of Operation

The following steps detail the key events in the upgrade process.

1. Controller mode and communications parameters are checked.
2. Download begins.
3. During the download, the Force, Battery, and Comms LEDs perform a walking bit pattern.
4. When the download is complete, the integrity of the new OS is checked. If the new OS is corrupt, the controller sends an error message to the download tool and flashes the Missing or Corrupt OS LED pattern. See Missing/Corrupt OS LED Pattern below.
5. Following a successful transfer, the Power, Force, and Battery LEDs flash on and remain on for five seconds. Then the controller resets.

Missing/Corrupt OS LED Pattern

When an operating system download is not successful or if the controller does not contain a valid operating system, the controller flashes the Run, Force, and Fault LEDS on and off.

Connect to Networks via RS-232 Interface

The following protocols are supported from the RS-232 communication channel:

- DF1 Full-duplex
- DF1 Half-duplex
- DH-485
- Modbus
- ASCII

RS-232 Communication Interface

The communications port on the MicroLogix 1200 utilizes an RS-232 interface. RS-232 is an Electronics Industries Association (EIA) standard that specifies the electrical and mechanical characteristics for serial binary communication. It provides you with a variety of system configuration possibilities. (RS-232 is a definition of electrical characteristics; it is not a protocol.)

One of the biggest benefits of an RS-232 interface is that it lets you integrate telephone and radio modems into your control system (using the appropriate DF1 protocol only, not DH-485 protocol).

DF1 Full-duplex Protocol

DF1 Full-duplex protocol provides a point-to-point connection between two devices. DF1 Full-duplex protocol combines data transparency (American National Standards Institute ANSI - X3.28-1976 specification subcategory D1) and 2-way simultaneous transmission with embedded responses (subcategory F1).

The MicroLogix 1200 controllers support the DF1 Full-duplex protocol via RS-232 connection to external devices, such as computers, or other controllers that support DF1 Full-duplex.

DF1 is an open protocol. Refer to DF1 Protocol and Command Set Reference Manual, publication 1770-6.5.16, for more information.

DF1 Full-duplex protocol (also referred to as DF1 point-to-point protocol) is useful where RS-232 point-to-point communication is required. DF1 protocol controls message flow, detects and signals errors, and retries if errors are detected.

Example DF1 Full-duplex Connections

For information about required network connecting equipment, see Chapter 4, Communication Connections.

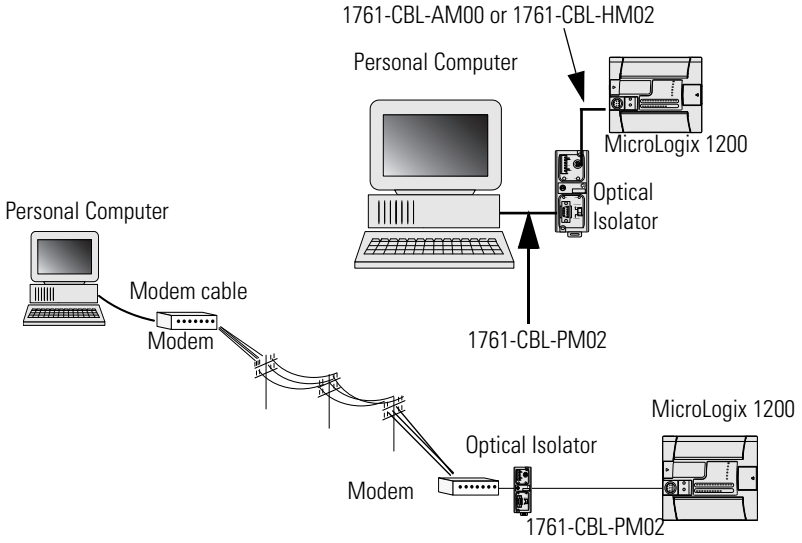

We recommend using an AIC+, catalog number 1761-NET-AIC, as your optical isolator.

DF1 Half-duplex Protocol

DF1 Half-duplex protocol is a multi-drop single master/multiple slave network. DF1 Half-duplex protocol supports data transparency (American National Standards Institute ANSI - X3.28-1976 specification subcategory D1). In contrast to DF1 Full-duplex, communication takes place in one direction at a time. You can use the RS-232 port on the MicroLogix 1200 as both a Half-duplex programming port and a Half-duplex peer-to-peer messaging port.

MicroLogix 1200 can act as the master or as a slave on a Half-duplex network. When the MicroLogix 1200 is a slave device, a master device is required to 'run' the network. Several other Allen-Bradley products support DF1 Half-duplex master protocol. They include the SLC 5/03 and higher processors, enhanced PLC-5 processors and Rockwell Software RSLinx (version 2.x and higher).

DF1 Half-duplex supports up to 255 devices (address 0 to 254) with address 255 reserved for master broadcasts. As a DF1 Half-duplex slave device, the MicroLogix 1200 supports broadcast reception. As a DF1 Half-duplex master, the MicroLogix 1200 supports both the reception and initiation of broadcast write commands (via the MSG instruction). The MicroLogix 1200 also supports Half-duplex modems using RTS/CTS hardware handshaking.

Example DF1 Half-duplex Connections

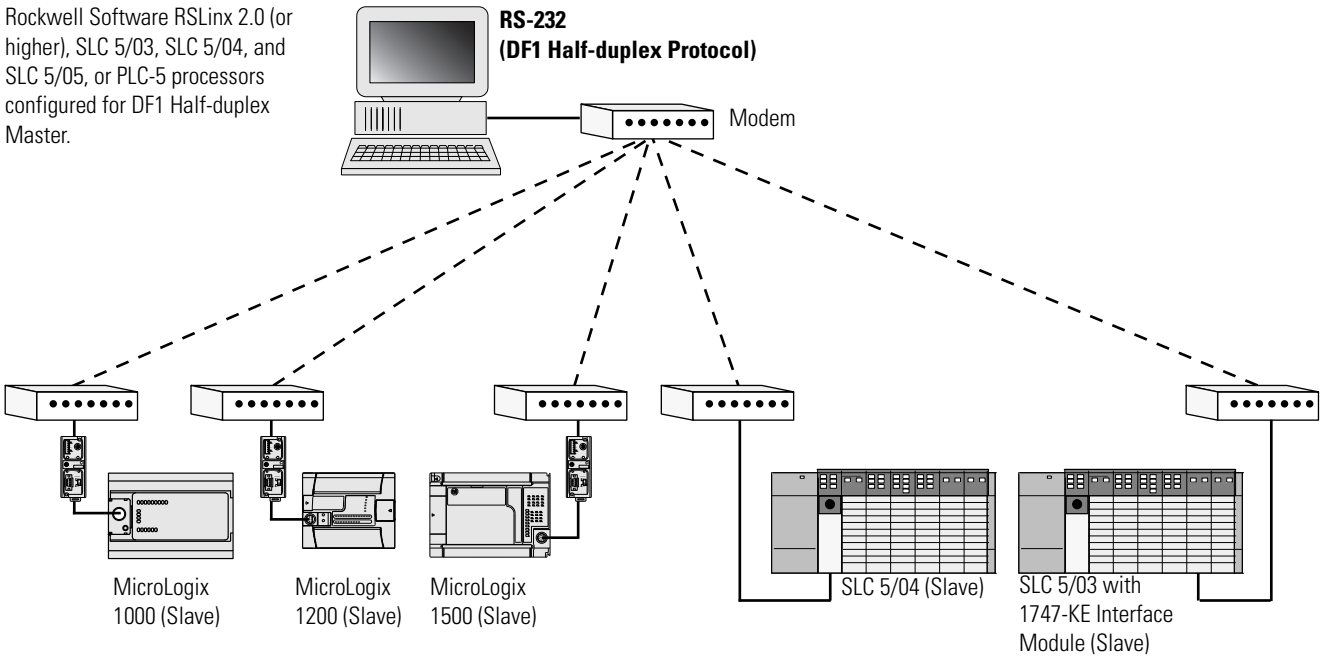

Use Modems with MicroLogix 1200 Programmable Controllers

The types of modems you can use with MicroLogix 1200 controllers include the following:

- dial-up phone modems
  A MicroLogix 1200 controller, on the receiving end of the dial-up connection, can be configured for DF1 Full-duplex protocol with or without handshaking. The modem connected to the MicroLogix controller should support auto-answer. The MicroLogix 1200 supports ASCII out communications. Therefore, it can cause a modem to initiate or disconnect a phone call.

- leased-line modems
  Leased-line modems are used with dedicated phone lines that are typically leased from the local phone company. The dedicated lines may be in a point-to-point topology supporting Full-duplex communications between two modems or in a multi-drop topology supporting Half-duplex communications between three or more modems.

- radio modems
  Radio modems may be implemented in a point-to-point topology supporting either Half-duplex or Full-duplex communications, or in a multi-drop topology supporting Half-duplex communications between three or more modems. MicroLogix 1200 also supports DF1 Radio Modem protocol.

- line drivers
  Line drivers, also called short-haul modems, do not actually modulate the serial data, but rather condition the electrical signals to operate reliably over long transmission distances (up to several miles). Line drivers are available in Full-duplex and Half-duplex models. Allen-Bradley's AIC+ Advanced Interface Converter is a Half-duplex line driver that converts an RS-232 electrical signal into an RS-485 electrical signal, increasing the signal transmission distance from 50 to 4000 feet (8000 feet when bridged).

For point-to-point Full-duplex modem connections that do not require any modem handshaking signals to operate, use DF1 Full-duplex protocol with no handshaking. For point-to-point Full-duplex modem connections that require RTS/CTS handshaking, use DF1 Full-duplex protocol with handshaking.

For radio modem connections, use DF1 Radio Modem protocol, especially if store and forward capability is required.

For general multi-drop modem connections, or for point-to-point modem connections that require RTS/CTS handshaking, use DF1 Half-duplex slave protocol. In this case, one (and only one) of the other devices must be configured for DF1 Half-duplex master protocol.

IMPORTANT Never attempt to use DH-485 protocol through modems under any circumstance.

TIP All MicroLogix 1200 controllers support RTS/CTS modem handshaking when configured for DF1 Full-duplex protocol with the control line parameter set to Full-duplex Modem Handshaking or DF1 Half-duplex slave protocol with the control line parameter set to 'Half-duplex Modem'. No other modem handshaking lines (Data Set Ready, Carrier Detect and Data Terminal Ready) are supported by any MicroLogix 1200 controllers.

DH-485 Communication Protocol

The DH-485 protocol defines the communication between multiple devices that coexist on a single pair of wires. DH-485 protocol uses RS-485 Half-duplex as its physical interface. (RS-485 is a definition of electrical characteristics; it is not a protocol.) RS-485 uses devices that are capable of co-existing on a common data circuit, thus allowing data to be easily shared between devices.

The DH-485 protocol supports two classes of devices: initiators and responders. All initiators on the network get a chance to initiate message transfers. To determine which initiator has the right to transmit, a token passing algorithm is used.

Devices that use the DH-485 Network

In addition to the MicroLogix 1200 controllers, the devices shown in the following table also support the DH-485 network.

Table E.1 Allen-Bradley Devices that Support DH-485 Communication

Catalog Number	Description	Installation	Function	Publication
Bulletin 1761 Controllers	MicroLogix 1000	Series C or higher	These controllers support DH-485 communications.	1761-6.3
Bulletin 1764	MicroLogix 1500	Series A or higher	These controllers support DH-485 communications.	1764-UM001
Bulletin 1747 Processors	SLC 500 Processors	SLC Chassis	These processors support a variety of I/O requirements and functionality.	1747-UM011
1746-BAS	BASIC Module	SLC Chassis	Provides an interface for SLC 500 devices to foreign devices. Program in BASIC to interface the 3 channels (2 RS232 and 1 DH-485) to printers, modems, or the DH-485 network for data collection.	1746-UM004 1746-PM001 1746-RM001
1785-KA5	DH+/DH-485 Gateway	(1771) PLC Chassis	Provides communication between stations on the PLC-5 (DH+) and SLC 500 (DH-485) networks. Enables communication and data transfer from PLC to SLC 500 on DH-485 network. Also enables programming software programming or data acquisition across DH+ to DH-485.	1785-6.5.5 1785-1.21
2760-RB	Flexible Interface Module	(1771) PLC Chassis	Provides an interface for SLC 500 (using protocol cartridge 2760-SFC3) to other A-B PLCs and devices. Three configurable channels are available to interface with Bar Code, Vision, RF, Dataliner, and PLC systems.	1747-6.12 2760-ND001
1784-KTX, -KTXD	PC DH-485 IM	IBM XT/AT Computer Bus	Provides DH-485 using RSLinx.	1784-6.5.22
1784-PCMK	PCMCIA IM	PCMCIA slot in computer and Interchange	Provides DH-485 using RSLinx.	1784-6.5.19
1747-PT1	Hand-Held Terminal	NA	Provides hand-held programming, monitoring, configuring, and troubleshooting capabilities for SLC 500 processors.	1747-NP002

Table E.1 Allen-Bradley Devices that Support DH-485 Communication

Catalog Number	Description	Installation	Function	Publication
1747-DTAM, 2707-L8P1, -L8P2, -L40P1, -L40P2, -V40P1, -V40P2, -V40P2N, -M232P3, and -M485P3	DTAM, DTAM Plus, and DTAM Micro Operator Interfaces	Panel Mount	Provides electronic operator interface for SLC 500 processors.	1747-6.1 2707-800, 2707-803
2711-K5A2, -B5A2, -K5A5, -B5A5, -K5A1, -B5A1, -K9A2, -T9A2, -K9A5, -T9A5, -K9A1, and -T9A1	PanelView 550 and PanelView 900 Operator Terminals	Panel Mount	Provides electronic operator interface for SLC 500 processors.	2711-UM014

NA = Not Applicable

Important DH-485 Network Planning Considerations

Carefully plan your network configuration before installing any hardware. Listed below are some of the factors that can affect system performance:

- amount of electrical noise, temperature, and humidity in the network environment
- number of devices on the network
- connection and grounding quality in installation
- amount of communication traffic on the network
- type of process being controlled
- network configuration

The major hardware and software issues you need to resolve before installing a network are discussed in the following sections.

Hardware Considerations

You need to decide the length of the communication cable, where you route it, and how to protect it from the environment where it will be installed.

When the communication cable is installed, you need to know how many devices are to be connected during installation and how many devices will be added in the future. The following sections help you understand and plan the network.

Number of Devices and Length of Communication Cable

The maximum length of the communication cable is 1219 m (4000 ft). This is the total cable distance from the first node to the last node in a segment. However, two segments can be used to extend the DH-485 network to 2438 m (8000 ft). For additional information on connections using the AIC+, refer to the Advanced Interface Converter (AIC+) User Manual, publication 1761-UM004.

Planning Cable Routes

Follow these guidelines to help protect the communication cable from electrical interference:

- Keep the communication cable at least 1.52 m (5 ft) from any electric motors, transformers, rectifiers, generators, arc welders, induction furnaces, or sources of microwave radiation.

- If you must run the cable across power feed lines, run the cable at right angles to the lines.

- If you do not run the cable through a contiguous metallic wireway or conduit, keep the communication cable at least 0.15 m (6 in.) from ac power lines of less than 20 A, 0.30 m (1 ft) from lines greater than 20 A, but only up to 100 kVA, and 0.60 m (2 ft) from lines of 100 kVA or more.

- If you run the cable through a contiguous metallic wireway or conduit, keep the communication cable at least 0.08 m (3 in) from ac power lines of less than 20 A, 0.15 m (6 in) from lines greater than 20 A, but only up to 100 kVA, and 0.30 m (1 ft) from lines of 100 kVA or more.

  Running the communication cable through conduit provides extra protection from physical damage and electrical interference. If you route the cable through conduit, follow these additional recommendations:

  - Use ferromagnetic conduit near critical sources of electrical interference. You can use aluminum conduit in non-critical areas.
  - Use plastic connectors to couple between aluminum and ferromagnetic conduit. Make an electrical connection around the plastic connector (use pipe clamps and the heavy gauge wire or wire braid) to hold both sections at the same potential.
  - Ground the entire length of conduit by attaching it to the building earth ground.
  - Do not let the conduit touch the plug on the cable.
  - Arrange the cables loosely within the conduit. The conduit should contain only serial communication cables.

– Install the conduit so that it meets all applicable codes and environmental specifications.

For more information on planning cable routes, see Industrial Automation Wiring and Grounding Guidelines, publication Number 1770-4.1.

Software Considerations

Software considerations include the configuration of the network and the parameters that can be set to the specific requirements of the network. The following are major configuration factors that have a significant effect on network performance:

- number of nodes on the network
- addresses of those nodes
- baud rate

The following sections explain network considerations and describe ways to select parameters for optimum network performance (speed). See your programming software's user manual for more information.

Number of Nodes

The number of nodes on the network directly affects the data transfer time between nodes. Unnecessary nodes (such as a second programming terminal that is not being used) slow the data transfer rate. The maximum number of nodes on the network is 32.

Setting Node Addresses

The best network performance occurs when node addresses are assigned in sequential order. Initiators, such as personal computers, should be assigned the lowest numbered addresses to minimize the time required to initialize the network. The valid range for the MicroLogix 1200 controllers is 1 to 31 (controllers cannot be node 0). The default setting is 1. The node address is stored in the controller Communications Status file (CS0:5/0 to CS0:5/7).

Setting Controller Baud Rate

The best network performance occurs at the highest baud rate, which is 19200. This is the default baud rate for a MicroLogix 1200 device on the DH-485 network. All devices must be at the same baud rate. This rate is stored in the controller Communications Status file (CS0:5/8 to CS0:5/15).

Setting Maximum Node Address

Once you have an established network set up and are confident that you will not be adding more devices, you may enhance performance by adjusting the

maximum node address of your controllers. It should be set to the highest node address being used.

IMPORTANT All devices should be set to the same maximum node address.

Example DH-485 Connections

The following network diagrams provide examples of how to connect MicroLogix 1200 controllers to the DH-485 network using the Advanced Interface Converter (AIC+, catalog number 1761-NET-AIC). For more information on the AIC+, see the Advanced Interface Converter and DeviceNet Interface Installation Instructions, Publication 1761-IN002.

DH-485 Network with a MicroLogix 1200 Controller

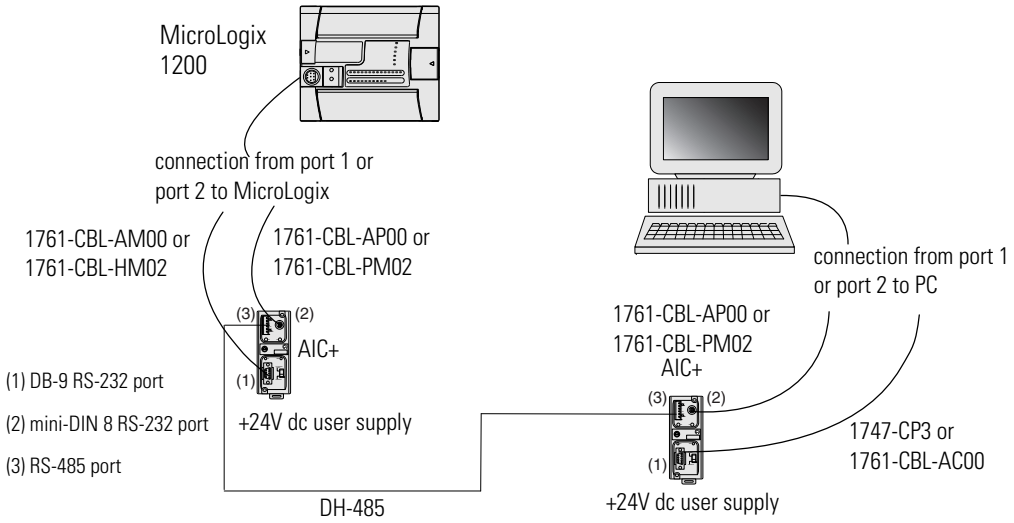

TIP Series C or higher cables are required.

Typical 3-Node Network

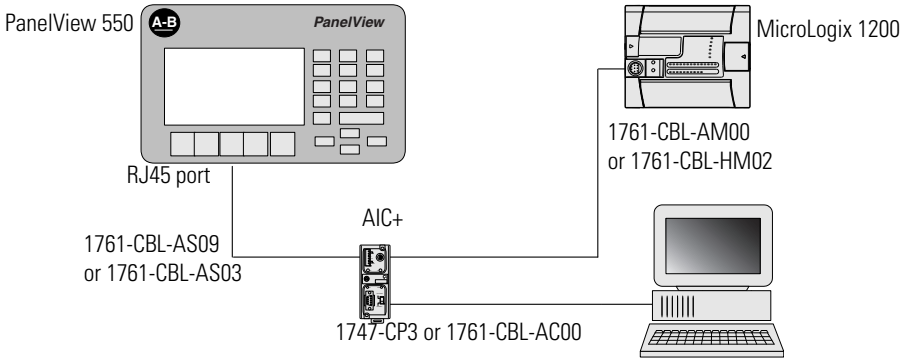

TIP This 3-node network is not expandable.

Networked Operator Interface Device and MicroLogix Controllers

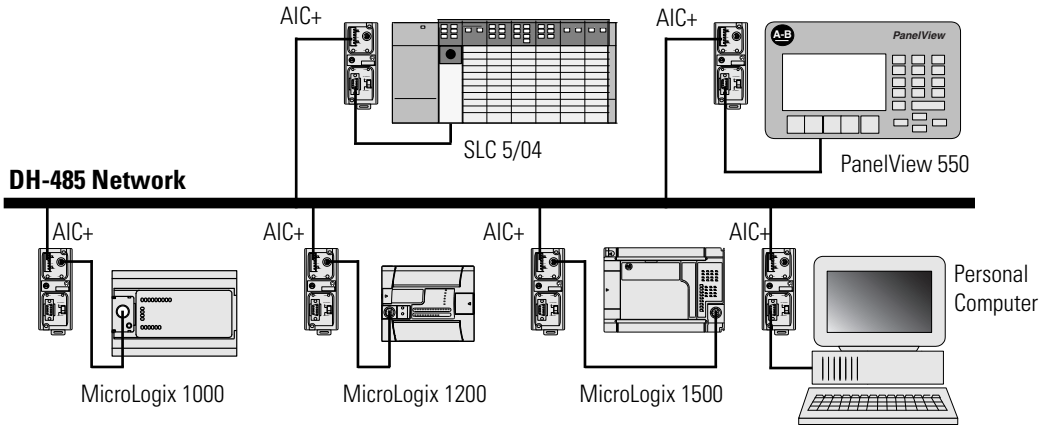

MicroLogix Remote Packet Support

MicroLogix 1200 controllers can respond and initiate with communications (or commands) that do not originate on the local DH-485 network. This is useful in installations where communication is needed between DH-485 and DH+ networks.

The example below shows how to send messages from a device on the DH+ network to a MicroLogix controller on the DH-485 network. This method uses an SLC 5/04 processor as the bridge connection.

When using this method (as shown in the illustration below):

- PLC-5 devices can send read and write commands to MicroLogix 1200 controllers.
- MicroLogix 1200 controllers can respond to MSG instructions received.

- The MicroLogix 1200 controllers can initiate MSG instructions to devices on the DH+ network.
- PC can send read and write commands to MicroLogix 1200 controllers.
- PC can do remote programming of MicroLogix 1200 controllers.

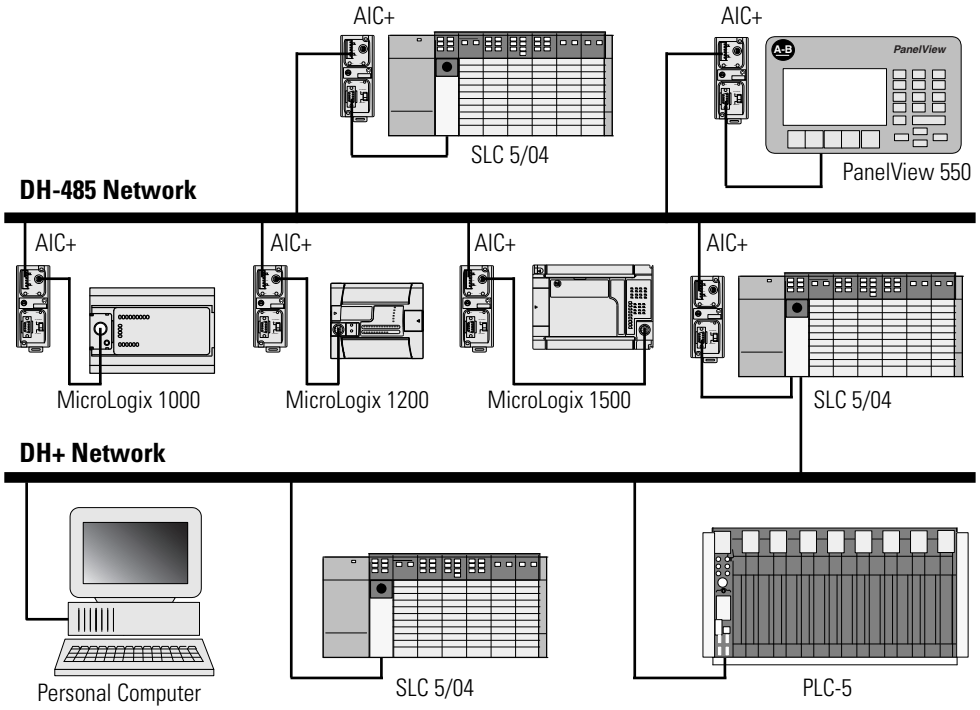

Modbus Communication Protocol

Modbus is a Half-duplex, master-slave communications protocol. The Modbus network master reads and writes coils and registers. Modbus protocol allows a single master to communicate with a maximum of 247 slave devices. MicroLogix 1200 controllers support Modbus RTU Master and Modbus RTU Slave protocol.

For more information on configurating your MicroLogix 1200 controller for Modbus protocol, refer to the MicroLogix 1200 and 1500 Programmable Controllers Instruction Set Reference Manual, publication 1762-RM001. For more information about the Modbus protocol, see the Modbus Protocol Specifications (available from http://www.modbus.org).

ASCII

ASCII provides connection to other ASCII devices, such as bar code readers, weigh scales, serial printers, and other intelligent devices.

You can use ASCII by configuring the RS-232 port, channel 0 for ASCII driver. Refer to the MicroLogix 1200 and MicroLogix 1500 Programmable Controllers Instruction Set Reference Manual, publication 1762-RM001 for detailed configuration information.

System Loading and Heat Dissipation

System Loading Limitations

When you connect MicroLogix accessories and expansion I/O, an electrical load is placed on the controller power supply. This section shows how to calculate the load and validate that the system will not exceed the capacity of the controller power supply.

The following example is provided to illustrate system loading validation. The system validation procedure accounts for the amount of 5V dc and 24V dc current consumed by controller, expansion I/O, and user-supplied equipment. Use the System Loading Worksheet on page F-4 to validate your specific 24-point controller configuration.

Use the System Loading Worksheet on page F-9 to validate your specific 40-point controller.

Current consumed by the processor, memory modules, and the real-time clock modules has already been factored into the calculations. A system is valid if the current and power requirements are satisfied.

System Current Loading Example Calculations (24-point Controller)

Table F.1 Calculating the Current for MicroLogix Accessories

Catalog Number	Device Current Requirements		Calculated Current	
	at 5V dc (mA)	at 24V dc (mA)	at 5V dc (mA)	at 24V dc (mA)
1761-NET-AIC(1) when powered by the base unit communications port, selector switch in the up position	0	120	0	120
Subtotal 1:			**0**	**120**

(1) This is an optional accessory. Current is consumed only if the accessory is installed.

Table F.2 Calculating the Current for Expansion I/O

Catalog Number[1]	n	A	B	n x A	n x B
	Number of Modules	Device Current Requirements (max)		Calculated Current	
		at 5V dc (mA)	at 24V dc (mA)	at 5V dc (mA)	at 24V dc (mA)
1762-IA8	2	50	0	100	0
1762-IF4		40	50		
1762-IF2OF2		40	105		
1762-IQ8		50	0		
1762-IQ16		70[2]	0		
1762-IQ32T		170	0		
1762-IR4		40	50		
1762-IT4		40	50		
1762-OA8		115	0		
1762-OB8		115	0		
1762-OB16		175	0		
1762-OB32T		175	0		
1762-OF4		40	165		
1762-OV32T		175	0		
1762-OW8	2	80	90	160	180
1762-OW16		140[2]	180[2]		
1762-OX6I		110	110		
1762-IQ8OW6		110	80		
Total Modules (6 maximum):	**4**	**Subtotal 2:**		**260**	**180**

(1) Refer to your expansion I/O Installation Instructions for Current Requirements not listed in this table.

(2) Only applicable to Series B I/O modules.

Validate the System

The example systems shown in the tables below are verified to be acceptable configurations. The systems are valid because:

- Calculated Current Values < Maximum Allowable Current Values
- Calculated System Loading < Maximum Allowable System Loading

Table F.3 Validating Systems Using 1762-L24AWA, 1762-L24BXB, 1762-L24AWAR or 1762-L24BXBR

Maximum Allowable Values		Calculated Values	
Current:		Current (Subtotal 1 + Subtotal 2 from Table F.1 and Table F.2 on page F-2.):	
400 mA at 5V dc	350 mA at 24V dc	0 mA + 260 mA = 260 mA at 5V dc	120 mA + 180 mA = 300 mA at 24V dc
System Loading:		System Loading:	
		= (260 mA x 5V) + (300 mA x 24 V) = (1300 mW) + (7200 mW) = 8500 mW	
10.4 Watts		= 8.50 Watts	

Table F.4 Validating Systems using 1762-L24BWA or 1762-L24BWAR

Maximum Allowable Values		Calculated Values	
Current for Devices Connected to the +24V dc Sensor Supply:		Sum of all sensor currents	
250 mA at 24V dc		140 mA at 24V dc (example sensor value)	
Current for MicroLogix Accessories and Expansion I/O:		Current Values (Subtotal 1 from Table F.1 + Subtotal 2 from Table F.2):	
400 mA at 5V dc	350 mA at 24V dc	0 mA + 260 mA = 260 mA at 5V dc	120 mA + 180 mA = 300 mA at 24V dc
System Loading:		System Loading:	
		= (140 mA x 24 V) + (260 mA x 5 V) + (300 mA x 24 V) = (3360 mW) + (1300 mW) + (7200 mW) = 11,860 mW	
12 Watts		= 11.9 Watts	

System Loading Worksheet

The tables below are provided for system loading validation for 24-point Controllers. See System Current Loading Example Calculations (24-point Controller) on page F-1.

Current Loading

Table F.5 Calculating the Current for MicroLogix Accessories

Catalog Number	Device Current Requirements		Calculated Current	
	at 5V dc (mA)	at 24V dc (mA)	at 5V dc (mA)	at 24V dc (mA)
1761-NET-AIC(1) when powered by the base unit communications port, selector switch in the up position	0	120		
Subtotal 1:				

(1) This is an optional accessory. Current is consumed only if the accessory is installed.

Table F.6 Calculating the Current for Expansion I/O

Catalog Number(1)	n	A	B	n x A	n x B
	Number of Modules	Device Current Requirements		Calculated Current	
		at 5V dc (mA)	at 24V dc (mA)	at 5V dc (mA)	at 24V dc (mA)
1762-IA8		50	0		
1762-IF4		40	50		
1762-IF2OF2		40	105		
1762-IQ8		50	0		
1762-IQ16		70(2)	0		
1762-IQ32T		170	0		
1762-IR4		40	50		
1762-IT4		40	50		
1762-OA8		115	0		
1762-OB8		115	0		
1762-OB16		175	0		
1762-OB32T		175	0		
1762-OF4		40	165		
1762-OV32T		175	0		
1762-OW8		80	90		
1762-OW16		140(2)	180(2)		
1762-OX6I		110	110		
1762-IQ8OW6		110	80		
Total Modules (6 maximum):		**Subtotal 2:**			

(1) Refer to your expansion I/O Installation Instructions for Current Requirements not listed in this table.

(2) Only applicable to Series B I/O modules.

Table F.7 Validating Systems using 1762-L24AWA, 1762-L24BXB, 1762-L24AWAR or 1762-L24BXBR

Maximum Allowable Values		Calculated Values	
Current:		Current (Subtotal 1 from Table F.5 + Subtotal 2 from Table F.6.):	
400 mA at 5V dc	350 mA at 24V dc	mA at 5V dc	mA at 24V dc
System Loading:		System Loading:	
		= (_____ mA x 5V) + (_____ mA x 24V) = _____ mW + _____ mW = _____ mW	
10.4 Watts		= _____ W	

Table F.8 Validating Systems using 1762-L24BWA or 1762-L24BWAR

Maximum Allowable Values		Calculated Values	
Current for Devices Connected to the +24V dc Sensor Supply:		Sum of all sensor currents Include 1761-NET-AIC here rather than in Table F.5, if it is powered externally by the sensor supply	
250 mA at 24V dc		mA at 24V dc	
Current for MicroLogix Accessories and Expansion I/O:		Current (Subtotal 1 from Table F.5 + Subtotal 2 from Table F.6.)	
400 mA at 5V dc	350 mA at 24V dc	mA at 5V dc	mA at 24V dc
System Loading:		System Loading:	
		= (_____ mA x 24 V) + (_____ mA x 5V) + (_____ mA x 24 V) = _____ mW + _____ mW + _____ mW = _____ mW	
12 Watts		= _____ W	

System Current Loading Example Calculations (40-point Controller)

Table F.9 Calculating the Current for MicroLogix Accessories

Catalog Number	Device Current Requirements		Calculated Current	
	at 5V dc (mA)	at 24V dc (mA)	at 5V dc (mA)	at 24V dc (mA)
1761-NET-AIC[1] when powered by the base unit communications port, selector switch in the up position	0	120	0	120
Subtotal 1:			**0**	**120**

(1) This is an optional accessory. Current is consumed only if the accessory is installed.

Table F.10 Calculating the Current for Expansion I/O

Catalog Number[1]	n	A	B	n x A	n x B
	Number of Modules	Device Current Requirements (max)		Calculated Current	
		at 5V dc (mA)	at 24V dc (mA)	at 5V dc (mA)	at 24V dc (mA)
1762-IA8		50	0		
1762-IF4		40	50		
1762-IF2OF2	1	40	105	40	105
1762-IQ8		50	0		
1762-IQ16	2	70[2]	0	140[2]	0
1762-IQ32T		170	0		
1762-IR4		40	50		
1762-IT4		40	50		
1762-OA8	1	115	0	115	0
1762-OB8		115	0		
1762-OB16		175	0		
1762-OB32T		175	0		
1762-OF4		40	165		
1762-OV32T		175	0		
1762-OW8		80	90		
1762-OW16	1	140[2]	180[2]	140[2]	180[2]
1762-OX6I		110	110		
1762-IQ8OW6		110	80		
Total Modules (6 maximum):	**6**	**Subtotal 2:**		**435**	**285**

(1) Refer to your expansion I/O Installation Instructions for Current Requirements not listed in this table.

(2) Only applicable to Series B I/O modules.

Validate the System

The example systems shown in Table F.11 and Table F.12 are verified to be acceptable configurations. The systems are valid because:

- Calculated Current Values < Maximum Allowable Current Values
- Calculated System Loading < Maximum Allowable System Loading

Table F.11 Validating Systems using 1762-L40AWA, 1762-L40BXB, 1762-L40AWAR or 1762-L40BXBR

Maximum Allowable Values		Calculated Values	
Current:		Current (Subtotal 1 from Table F.9 + Subtotal 2 from Table F.10):	
600 mA at 5V dc	500 mA at 24V dc	0 mA + 435 mA = 435 mA at 5V dc	120 mA + 285 mA = 405 mA at 24V dc
System Loading:		System Loading:	
15 Watts		= (4.5 mA x 5V) + (405 mA x 24V) = (2175 mW) + (9720 mW) = 11,895 mW = 11.90 Watts	

Table F.12 Validating Systems using 1762-L40BWA or 1762-L40BWAR

Maximum Allowable Values		Calculated Values	
Current for Devices Connected to the +24V dc Sensor Supply:		Sum of all current sensors	
400 mA at 24V dc		150 mA at 24V dc (example sensor value)	
Current for MicroLogix Accessories and Expansion I/O:		Current (Subtotal 1 from Table F.9 + Subtotal 2 from Table F.10):	
600 mA at 5V dc	500 mA at 24V dc	0 mA + 435 mA = 435 mA at 5V dc	120 mA + 285 mA = 405 mA at 24V dc
System Loading:		System Loading:	
16 Watts		= (150 mA x 24V) + (435 mA x 5V) + (405 mA x 24V) = (3600 mW) + (2175 mW) + (9720 mW) = 15,495 W = 15.50 Watts	

System Loading Worksheet

The tables below are provided for system loading validation for 40-point Controllers. See System Current Loading Example Calculations (40-point Controller) on page F-6.

Current Loading

Table F.13 Calculating the Current for MicroLogix Accessories

Catalog Number	Device Current Requirements		Calculated Current	
	at 5V dc (mA)	at 24V dc (mA)	at 5V dc (mA)	at 24V dc (mA)
1761-NET-AIC(1) when powered by the base unit communications port, selector switch in the up position	0	120		
Subtotal 1:				

(1) This is an optional accessory. Current is consumed only if the accessory is installed.

Table F.14 Calculating the Current for Expansion I/O

Catalog Number(1)	n	A	B	n x A	n x B
	Number of Modules	Device Current Requirements		Calculated Current	
		at 5V dc (mA)	at 24V dc (mA)	at 5V dc (mA)	at 24V dc (mA)
1762-IA8		50	0		
1762-IQ8		50	0		
1762-IF4		40	50		
1762-IF2OF2		40	105		
1762-IQ16		70(2)	0		
1762-IQ32T		170	0		
1762-IR4		40	50		
1762-IT4		40	50		
1762-OA8		115	0		
1762-OB8		115	0		
1762-OB16		175	0		
1762-OB32T		175	0		
1762-OF4		40	165		
1762-OV32T		175	0		
1762-OW8		80	90		
1762-OW16		140(2)	180(2)		

Table F.14 Calculating the Current for Expansion I/O

1762-OX6I		110	110		
1762-IQ8OW6		110	80		
Total Modules (6 maximum):		**Subtotal 2:**			

(1) Refer to your expansion I/O Installation Instructions for Current Requirements not listed in this table.

(2) Only applicable to Series B I/O modules.

Table F.15 Validating Systems using 1762-L40AWA, 1762-L40BXB, 1762-L40AWAR or 1762-L40BXBR

Maximum Allowable Values		**Calculated Values**	
Current:		Current (Subtotal 1 from Table F.13 + Subtotal 2 from Table F.14.):	
600 mA at 5V dc	500 mA at 24V dc		
System Loading:		System Loading:	
		= (_____ mA x 5V) + (_____ mA x 24V) = _____ mW + _____ mW = _____ mW	
15 Watts		= _____ W	

Table F.16 Validating Systems using 1762-L40BWA or 1762-L40BWAR

Maximum Allowable Values		**Calculated Values**	
Current for Devices Connected to the +24V dc Sensor Supply:		Sum of all sensor currents Include 1761-NET-AIC here rather than in Table F.13, if it is powered externally by the sensor supply	
400 mA at 24V dc		mA at 24V dc	
Current for MicroLogix Accessories and Expansion I/O:		Current (Subtotal 1 from Table F.13 + Subtotal 2 from page Table F.14.):	
600 mA at 5V dc	500 mA at 24V dc	mA at 5 V dc	mA at 24V dc
System Loading:		System Loading:	
		= (_____ mA x 24V) + (_____ mA x 5V) + (_____ mA x 24V) = _____ mW + _____ mW + _____ mW = _____ mW	
16 Watts		= _____ W	

Calculating Heat Dissipation

Use the following table when you need to determine the heat dissipation of your system for installation in an enclosure. For System Loading, take the value from the appropriate system loading worksheets on pages F-4, F-5, F-8 or F-9:

Table F.17 Heat Dissipation

Catalog Number	Heat Dissipation		
	Equation or Constant	**Calculation**	**Sub-Total**
1762-L24AWA, -L24AWAR	15.2W + (0.4 x System Loading)	15.2W + (0.4 x _____ W)	W
1762-L24BWA, -L24BWAR	15.7W + (0.4 x System Loading)	15.7W + (0.4 x _____ W)	W
1762-L24BXB, -L24BXBR	17.0W + (0.3 x System Loading)	17.0W + (0.3 x _____ W)	W
1762-L40AWA, -L40AWAR	21.0W + (0.4 x System Loading)	21.0W + (0.4 x _____ W)	W
1762-L40BWA, -L40BWAR	22.0W + (0.4 x System Loading)	22.0W + (0.4 x _____ W)	W
1762-L40BXB, -L40BXBR	27.9W + (0.3 x System Loading)	27.9W + (0.3 x _____ W)	W
1762-IA8	2.0W x number of modules	2.0W x _____	W
1762-IF4	2.0W x number of modules	2.0W x _____	W
1762-IF2OF2	2.6W x number of modules	2.6W x _____	W
1762-IQ8	3.7W x number of modules	3.7W x _____	W
1762-IQ16	5.1W(1) x number of modules	5.1W(1) x _____	W
1762-IQ32T	6.8 W x number of modules (at 30.0V dc) 5.4 W x number of modules (at 26.4V dc)	6.8 W x _____ (at 30.0V dc) 5.4 W x _____ (at 26.4V dc)	W W
1762-IR4	1.5W x number of modules	1.5W x _____	W
1762-IT4	1.5W x number of modules	1.5W x _____	W
1762-OA8	2.9W x number of modules	2.9W x _____	W
1762-OB8	1.6W x number of modules	1.6W x _____	W
1762-OB16	2.9W x number of modules	2.9W x _____	W
1762-OB32T	3.4 W x number of modules	3.4 W x _____	W
1762-OF4	2.8W x number of modules	2.8W x _____	W
1762-OV32T	2.7 W x number of modules	2.7 W x _____	W
1762-OW8	2.9W x number of modules	2.9W x _____	W
1762-OW16	6.1(1)W x number of modules	6.1W(1) x _____	W
1762-OX6I	2.8W x number of modules	2.8W x _____	W
1762-IQ8OW6	5.0W x number of modules (at 30V dc) 4.4W x number of modules (at 26.4V dc)	5.0W x _____ 4.4W x _____	W W
Add Sub-totals to determine Heat Dissipation			**W**

(1) Only applicable to Series B I/O modules.

The following terms are used throughout this manual. Refer to the Allen-Bradley Industrial Automation Glossary, Publication Number AG-7.1, for a complete guide to Allen-Bradley technical terms.

address

A character string that uniquely identifies a memory location. For example, I:1/0 is the memory address for the data located in the Input file location word1, bit 0.

AIC+ Advanced Interface Converter

A device that provides a communication link between various networked devices. (Catalog Number 1761-NET-AIC.)

application

1) A machine or process monitored and controlled by a controller.
2) The use of computer- or processor-based routines for specific purposes.

baud rate

The speed of communication between devices. All devices must communicate at the same baud rate on a network.

bit

The smallest storage location in memory that contains either a 1 (ON) or a 0 (OFF).

block diagrams

A schematic drawing.

Boolean operators

Logical operators such as AND, OR, NAND, NOR, NOT, and Exclusive-OR that can be used singularly or in combination to form logic statements or circuits. Can have an output response of T or F.

branch

A parallel logic path within a rung of a ladder program.

communication scan

A part of the controller's operating cycle. Communication with other devices, such as software running on a personal computer, takes place.

controller

A device, such as a programmable controller, used to monitor input devices and control output devices.

controller overhead

An internal portion of the operating cycle used for housekeeping and set-up purposes.

control profile

The means by which a controller determines which outputs turn on under what conditions.

counter

1) An electro-mechanical relay-type device that counts the occurrence of some event. May be pulses developed from operations such as switch closures or interruptions of light beams.
2) In controllers, a software counter eliminates the need for hardware counters. The software counter can be given a preset count value to count up or down whenever the counted event occurs.

CPU (Central Processing Unit)

The decision-making and data storage section of a programmable controller.

data table

The part of processor memory that contains I/O values and files where data is monitored, manipulated, and changed for control purposes.

DIN rail

Manufactured according to Deutsche Industrie Normenausshus (DIN) standards, a metal railing designed to ease installation and mounting of your controller.

download

Data is transferred from a programming or storage device to another device.

DTE (Data Terminal Equipment)

Equipment that is attached to a network to send or receive data, or both.

embedded I/O

Embedded I/O is the controller's on-board I/O.

EMI

Electromagnetic interference.

encoder

1) A rotary device that transmits position information.
2) A device that transmits a fixed number of pulses for each revolution.

executing mode

Any run or test mode.

expansion I/O

Expansion I/O is I/O that is connected to the controller via a bus or cable. MicroLogix 1200 controllers use Bulletin 1762 expansion I/O.

false

The status of an instruction that does not provide a continuous logical path on a ladder rung.

FIFO (First-In-First-Out)

The order that data is entered into and retrieved from a file.

file

A collection of information organized into one group.

full-duplex

A bidirectional mode of communication where data may be transmitted and received simultaneously (contrast with half-duplex).

half-duplex

A communication link in which data transmission is limited to one direction at a time.

hard disk

A storage area in a personal computer that may be used to save processor files and reports for future use.

high byte

Bits 8 to 15 of a word.

input device

A device, such as a push button or a switch, that supplies signals to the input circuits of the controller.

inrush current

The temporary surge current produced when a device or circuit is initially energized.

instruction

A mnemonic and data address defining an operation to be performed by the processor. A rung in a program consists of a set of input and output instructions. The input instructions are evaluated by the controller as being true or false. In turn, the controller sets the output instructions to true or false.

instruction set

The set of general purpose instructions available with a given controller.

I/O (Inputs and Outputs)

Consists of input and output devices that provide and/or receive data from the controller.

jump

Change in normal sequence of program execution, by executing an instruction that alters the program counter (sometimes called a branch). In ladder programs a JUMP (JMP) instruction causes execution to jump to a labeled rung.

ladder logic

A program written in a format resembling a ladder-like diagram. The program is used by a programmable controller to control devices.

least significant bit (LSB)

The digit (or bit) in a binary word (code) that carries the smallest value of weight.

LED (Light Emitting Diode)

Used as status indicator for processor functions and inputs and outputs.

LIFO (Last-In-First-Out)

The order that data is entered into and retrieved from a file.

low byte

Bits 0 to 7 of a word.

logic

A process of solving complex problems through the repeated use of simple functions that can be either true or false. General term for digital circuits and programmed instructions to perform required decision making and computational functions.

Master Control Relay (MCR)

A mandatory hard-wired relay that can be de-energized by any series-connected emergency stop switch. Whenever the MCR is de-energized, its contacts open to de-energize all application I/O devices.

mnemonic

A simple and easy to remember term that is used to represent a complex or lengthy set of information.

modem

Modulator/demodulator. Equipment that connects data terminal equipment to a communication line.

modes

Selected methods of operation. Example: run, test, or program.

negative logic

The use of binary logic in such a way that "0" represents the voltage level normally associated with logic 1 (for example, 0 = +5V, 1 = 0V). Positive is more conventional (for example, 1 = +5V, 0 = 0V).

network

A series of stations (nodes) connected by some type of communication medium. A network may be made up of a single link or multiple links.

nominal input current

The current at nominal input voltage.

normally closed

Contacts on a relay or switch that are closed when the relay is de-energized or the switch is deactivated; they are open when the relay is energized or the

switch is activated. In ladder programming, a symbol that allows logic continuity (flow) if the referenced input is logic "0" when evaluated.

normally open

Contacts on a relay or switch that are open when the relay is de-energized or the switch is deactivated. (They are closed when the relay is energized or the switch is activated.) In ladder programming, a symbol that allows logic continuity (flow) if the referenced input is logic "1" when evaluated.

off-delay time

The OFF delay time is a measure of the time required for the controller logic to recognize that a signal has been removed from the input terminal of the controller. The time is determined by circuit component delays and by any filter adjustment applied.

offline

Describes devices not under direct communication.

offset

The steady-state deviation of a controlled variable from a fixed point.

off-state leakage current

When an ideal mechanical switch is opened (off-state) no current flows through the switch. Practical semiconductor switches, and the transient suppression components which are sometimes used to protect switches, allow a small current to flow when the switch is in the off state. This current is referred to as the off-state leakage current. To ensure reliable operation, the off-state leakage current rating of a switch should be less than the minimum operating current rating of the load that is connected to the switch.

on-delay time

The ON delay time is a measure of the time required for the controller logic to recognize that a signal has been presented at the input terminal of the controller.

one-shot

A programming technique that sets a bit for only one program scan.

online

Describes devices under direct communication. For example, when RSLogix 500 is monitoring the program file in a controller.

operating voltage

For inputs, the voltage range needed for the input to be in the On state. For outputs, the allowable range of user-supplied voltage.

output device

A device, such as a pilot light or a motor starter coil, that is controlled by the controller.

processor

A Central Processing Unit. (See CPU.)

processor file

The set of program and data files used by the controller to control output devices. Only one processor file may be stored in the controller at a time.

program file

The area within a processor file that contains the ladder logic program.

program mode

When the controller is not executing the processor file and all outputs are de-energized.

program scan

A part of the controller's operating cycle. During the scan the ladder program is executed and the output data file is updated based on the program and the input data file.

programming device

Executable programming package used to develop ladder diagrams.

protocol

The packaging of information that is transmitted across a network.

read

To acquire data from a storage place. For example, the processor READs information from the input data file to solve the ladder program.

relay

An electrically operated device that mechanically switches electrical circuits.

relay logic

A representation of the program or other logic in a form normally used for relays.

restore

To download (transfer) a program from a personal computer to a controller.

reserved bit

A status file location that the user should not read or write to.

retentive data

Information associated with data files (timers, counters, inputs, and outputs) in a program that is preserved through power cycles.

RS-232

An EIA standard that specifies electrical, mechanical, and functional characteristics for serial binary communication circuits. A single-ended serial communication interface.

run mode

This is an executing mode during which the controller scans or executes the ladder program, monitors input devices, energizes output devices, and acts on enabled I/O forces.

rung

Ladder logic is comprised of a set of rungs. A rung contains input and output instructions. During Run mode, the inputs on a rung are evaluated to be true or false. If a path of true logic exists, the outputs are made true. If all paths are false, the outputs are made false.

save

To upload (transfer) a program stored in memory from a controller to a personal computer; OR to save a program to a computer hard disk.

scan time

The time required for the controller to execute the instructions in the program. The scan time may vary depending on the instructions and each instruction's status during the scan.

sinking

A term used to describe current flow between an I/O device and controller I/O circuit — typically, a sinking device or circuit provides a path to ground, low, or negative side of power supply.

sourcing

A term used to describe current flow between an I/O device and controller I/O circuit — typically, a sourcing device or circuit provides a path to the source, high, or positive side of power supply.

status

The condition of a circuit or system, represented as logic 0 (OFF) or 1 (ON).

terminal

A point on an I/O module that external I/O devices, such as a push button or pilot light, are wired to.

throughput

The time between when an input turns on and the corresponding output turns on.

true

The status of an instruction that provides a continuous logical path on a ladder rung.

upload

Data is transferred to a programming or storage device from another device.

watchdog timer

A timer that monitors a cyclical process and is cleared at the conclusion of each cycle. If the watchdog runs past its programmed time period, it causes a fault.

workspace

The main storage available for programs and data and allocated for working storage.

write

To copy data to a storage device. For example, the processor WRITEs the information from the output data file to the output modules.

Notes:

Numerics

1762-24AWA wiring diagram 3-12
1762-40BWA sourcing wiring diagram 3-15
1762-IA8 wiring diagram 3-18
1762-IF2OF2
- input type selection 3-26
- output type selection 3-26
- terminal block layout 3-27
- wiring 3-27

1762-IF4
- input type selection 3-28
- terminal block layout 3-29

1762-IQ16 wiring diagram 3-19
1762-IQ32T wiring diagram 3-20
1762-IQ8 wiring diagram 3-18
1762-IQ80W6 wiring diagram 3-25
1762-OA8 wiring diagram 3-20
1762-OB16 wiring diagram 3-21
1762-OB32T wiring diagram 3-22
1762-OB8 wiring diagram 3-21
1762-OV32T wiring diagram 3-22
1762-OW16 wiring diagram 3-23
1762-OW8 wiring diagram 3-23
1762-OX6I wiring diagram 3-24

A

address G-1
Advanced Interface Converter. See AIC+
agency certifications 2-1
AIC+
- apply power to 4-17
- attach to the network 4-17
- connect 4-12
- connecting
  - isolated modem 4-6
- definition G-1
- install 4-17
- modem connections 4-6
- recommended user supplied components 4-15
- safety consideration 4-17
- select cable 4-14

analog expansion I/O C-4
- diagnostics C-4
- module operation vs. channel operation C-4
- power-up diagnostics C-4
- system wiring guidelines 3-25
- troubleshooting C-4

application G-1

B

battery 6-2
baud rate G-1
bit G-1
block diagrams G-1
Boolean operators G-1
branch G-1

C

cables
- planning routes for DH485 connections E-7
- selection guide for the AIC+ 4-14

call for assistance C-8
CE mark 2-2
common mode rejection ratio
- specification A-19

common techniques used in this manual P-2
communication connections 4-1
communication options 1-4
communication protocols
- DF1 Full-duplex E-1
- DF1 Half-duplex E-2
- DH485 E-5
- Modbus E-12

communication scan G-1
communications toggle push button
- use 4-3

component descriptions 1-2
- 1762 expansion I/O 1-3
- communication cables 1-4
- memory module 1-2
- real-time clock 1-2

configuration errors C-6
connect expansion I/O 2-19
connect the system
- AIC+ 4-12, 4-17
- DF1 Full-Duplex protocol 4-4
- DF1 isolated point-to-point connection 4-5
- DH485 network 4-9

connect to DF1 Half-Duplex network 4-8
contactors (bulletin 100), surge suppressors for 3-5
control profile G-2
ControlFlash
- missing/corrupt OS LED pattern D-2
- sequence of operation D-2
- use D-1

controller G-2
ground 3-6
I/O wiring 3-17
installation 2-1
LED status C-1
LED status error conditions C-2
LED status normal operation C-2
minimize electrical noise 3-17
mount 2-14
mount on DIN rail 2-15
mount on panel 2-16
mounting dimensions 2-13
prevent excessive heat 2-7
controller overhead G-2
controller spacing 2-13
counter G-2
CPU (Central Processing Unit) G-2

D

data table G-2
default communication configuration 4-2
DF1 Full-Duplex protocol
connect 4-4, 4-5
DF1 Full-duplex protocol
description E-1
example system configuration E-2
use a modem 4-5
using a modem E-3
DF1 Half-Duplex protocol
description E-2
DH485 network
configuration parameters E-8
connect 4-9
devices that use the network E-5
example system configuration E-9
installation 4-9
planning considerations E-6
DIN rail G-2
disconnect main power 2-5
download G-2
DTE (Data Terminal Equipment) G-2

E

Electronics Industries Association (EIA) E-1
EMC Directive 2-2
EMI G-3
encoder G-3
error recovery model C-3
errors
configuration C-6
critical C-5
extended error information field C-6
hardware C-6
module error field C-6
non-critical C-5
European Union Directive compliance 2-2
EMC Directive 2-2
low voltage directive 2-2
executing mode G-3
expansion I/O
1762-IF2OF2 input type selection 3-26
1762-IF2OF2 output type selection 3-26
expansion I/O mount 2-18
expansion I/O wiring 3-18
1762-IA8 wiring diagram 3-18
1762-IF2OF2 wiring 3-27
1762-IF4 terminal block layout 3-29
1762-IQ16 wiring diagram 3-19
1762-IQ32T wiring diagram 3-20
1762-IQ8 wiring diagram 3-18
1762-IQ80W6 wiring diagram 3-25
1762-OA8 wiring diagram 3-20
1762-OB16 wiring diagram 3-21
1762-OB32T wiring diagram 3-22
1762-OB8 wiring diagram 3-21
1762-OV32T wiring diagram 3-22
1762-OW16 wiring diagram 3-23
1762-OW8 wiring diagram 3-23
1762-OX6I wiring diagram 3-24
analog wiring guidelines 3-25
extended error information field C-6

F

false G-3
FIFO (First-In-First-Out) G-3
file G-3
Full-duplex 4-5
full-duplex G-3

G

general considerations 2-2
ground the controller 3-6

H

Half-duplex 4-8, G-3
hard disk G-3
hardware errors C-6
hardware features 1-1
heat dissipation
calculating F-10
heat protection 2-7
high byte G-3

I

I/O (Inputs and Outputs) G-4
input device G-4
input states on power down 2-7
inrush current G-4
install
ControlFlash software D-1
memory module 2-12
your controller 2-1
install real-time clock 2-12
instruction G-4
instruction set G-4
isolated link coupler
install 4-10
isolation transformers
power considerations 2-6

J

jump G-4

L

ladder logic G-4
least significant bit (LSB) G-4
LED (Light Emitting Diode) G-4
LIFO (Last-In-First-Out) G-4
logic G-5
low byte G-5

M

manuals
related P-2
master control relay 2-8
emergency-stop switches 2-9
using ANSI/CSA symbols schematic 2-11
using IEC symbols schematic 2-10
Master Control Relay (MCR) G-5
master control relay circuit
periodic tests 2-6
memory module
data file protection 6-4
operation 6-3
program compare 6-4
program/data backup 6-3
removal/installation under power 6-4
write protection 6-4
minimize electrical noise 3-17
mnemonic G-5
Modbus communication protocol E-12
modem G-5
modem cable
construct your own 4-7
modems
use with MicroLogix controllers E-3
modes G-5
module error field C-6
motor starters (bulletin 509)
surge suppressors 3-5
motor starters (bulletin 709)
surge suppressors 3-5
mount expansion I/O 2-17
mount on DIN rail 2-17

N

negative logic G-5
network G-5
nominal input current G-5
normally closed G-5
normally open G-6
null modem cable 4-7

O

offline G-6
offset G-6
off-state leakage current G-6
one-shot G-6
online G-6
operating voltage G-7
output device G-7

P

planning considerations for a network E-6
power considerations
input states on power down 2-7
isolation transformers 2-6
loss of power source 2-7
other line conditions 2-7
overview 2-6
power supply inrush 2-6
power distribution 2-5
power source
loss of 2-7
power supply inrush
power considerations 2-6
prepare for upgrade D-1
prevent excessive heat 2-7
processor G-7
processor file G-7
program 1-4
program file G-7
program mode G-7
program scan G-7
programming device G-7
protocol G-7
publications
related P-2
purpose of this manual P-1

R

read G-7
real-time clock
battery operation 6-2
disable 6-2
operation 6-1
removal/installation under power 6-1
write data 6-2
related documentation P-2
related publications P-2
relay G-7
relay logic G-8
relays
surge suppressors for 3-5
remote packet support E-10
replacement parts B-1
reserved bit G-8
restore G-8
retentive data G-8
RS-232 G-8
RS-232 communication interface E-1
run mode G-8
rung G-8

S

safety circuits 2-5
safety considerations 2-3
disconnect main power 2-5
hazardous location 2-3
master control relay circuit periodic tests 2-6
periodic tests of master control relay circuit 2-6
power distribution 2-5
safety circuits 2-5
save G-8
scan time G-8
sinking G-9
sinking and sourcing wiring diagrams 3-12
sinking wiring diagram
1762-24BWA 3-13
sourcing G-9
sourcing wiring diagram
1762-24BWA 3-13
specifications A-1
status G-9
surge suppressors
for contactor 3-5
for motor starters 3-5
for relays 3-5
recommended 3-5
use 3-3
system configuration
DF1 Full-duplex examples E-2
DH485 connection examples E-9
system loading
example calculations F-1
limitations F-1
worksheet F-4
system loading and heat dissipation F-1

T

terminal G-9
terminal block layouts
1762-IF2OF2 3-27
1762-IF4 3-29
controllers 3-7
terminal groupings 3-9
terminal groupings 3-9
throughput G-9

Trim Pot Information Function File 5-2
trim pot operation 5-1
trim pots 5-1
adjustment 5-1
error conditions 5-2
location 5-1
troubleshoot your system C-1
true G-9

U

upload G-9
use communications toggle push button 4-3
use emergency-stop switches 2-9
use memory modules 6-1
use real-time clock 6-1
use trim pots 5-1

W

wire your controller 3-1
wiring diagram
1762-IA8 3-18
1762-IF2OF2 differential sensor 3-27
1762-IF2OF2 single-ended sensor 3-28
1762-IQ16 3-19
1762-IQ32T 3-20
1762-IQ8 3-18
1762-IQ80W6 3-25
1762-L24AWA input 3-12
1762-L24AWA output 3-14
1762-L24BWA output 3-14
1762-L24BWA sinking 3-13
1762-L24BWA sourcing 3-13
1762-L24BXB output 3-15
1762-L24BXB sinking 3-14
1762-L24BXB sourcing 3-14
1762-L40AWA input 3-15
1762-L40AWA output 3-17
1762-L40BWA output 3-17
1762-L40BWA sourcing 3-16
1762-L40BXB output 3-17
1762-L40BXB sinking 3-16
1762-L40BXB sourcing 3-16
1762-OA8 3-20
1762-OB16 3-21
1762-OB32T 3-22
1762-OB8 3-21
1762-OV32T 3-22
1762-OW16 3-23
1762-OW8 3-23
1762-OX6I 3-24
terminal block layouts 3-7, 3-27, 3-29
wiring diagrams 3-7
workspace G-9
write G-9

Notes:

Rockwell Automation Support

Rockwell Automation provides technical information on the Web to assist you in using its products.
At http://www.rockwellautomation.com/support/, you can find technical manuals, a knowledge base of FAQs, technical and application notes, sample code and links to software service packs, and a MySupport feature that you can customize to make the best use of these tools.

For an additional level of technical phone support for installation, configuration, and troubleshooting, we offer TechConnect support programs. For more information, contact your local distributor or Rockwell Automation representative, or visit http://www.rockwellautomation.com/support/.

Installation Assistance

If you experience a problem within the first 24 hours of installation, review the information that is contained in this manual. You can contact Customer Support for initial help in getting your product up and running.

United States or Canada	1.440.646.3434
Outside United States or Canada	Use the Worldwide Locator at http://www.rockwellautomation.com/support/americas/phone_en.html, or contact your local Rockwell Automation representative.

New Product Satisfaction Return

Rockwell Automation tests all of its products to ensure that they are fully operational when shipped from the manufacturing facility. However, if your product is not functioning and needs to be returned, follow these procedures.

United States	Contact your distributor. You must provide a Customer Support case number (call the phone number above to obtain one) to your distributor to complete the return process.
Outside United States	Please contact your local Rockwell Automation representative for the return procedure.

Documentation Feedback

Your comments will help us serve your documentation needs better. If you have any suggestions on how to improve this document, complete this form, publication RA-DU002, available at http://www.rockwellautomation.com/literature/.

Rockwell Otomasyon Ticaret A.Ş., Kar Plaza İş Merkezi E Blok Kat:6 34752 İçerenköy, İstanbul, Tel: +90 (216) 5698400

www.rockwellautomation.com

Power, Control and Information Solutions Headquarters

Americas: Rockwell Automation, 1201 South Second Street, Milwaukee, WI 53204-2496 USA, Tel: (1) 414.382.2000, Fax: (1) 414.382.4444
Europe/Middle East/Africa: Rockwell Automation NV, Pegasus Park, De Kleetlaan 12a, 1831 Diegem, Belgium, Tel: (32) 2 663 0600, Fax: (32) 2 663 0640
Asia Pacific: Rockwell Automation, Level 14, Core F, Cyberport 3, 100 Cyberport Road, Hong Kong, Tel: (852) 2887 4788, Fax: (852) 2508 1846

Publication 1762-UM001H-EN-P - June 2015
Supersedes Publication 1762-UM001G-EN-P - March 2011
Copyright © 2015 Rockwell Automation, Inc. All rights reserved. Printed in the U.S.A.