Installation Instructions

Original Instructions

EtherNet/IP Absolute Encoders: Standard and CIP Safety Models

Bulletin Numbers 843E, 843ES

Topic	Page
Introduction	1
Technical Specifications	1
Product Overview	1
Specifications	1
Approximate Dimensions	2
Encoder Installation	4
Diagnostics	5
Rotary Switches	6
Declaration of Conformity	6
Additional Resources	6

ATTENTION: Do not attempt to install this device unless the installation instructions have been studied and understood. This document acts as a guide for a typical installation.

Summary of Changes

This publication contains the following new or updated information. This list includes substantive updates only and is not intended to reflect all changes.

Topic	Page
Updated title.	1
Updated Introduction, Technical Specifications, and Product Overview.	1
Updated Table 1	1
Updated Table 2	2
Added Figure 5, Figure 6, and Figure 7.	3
Updated Additional Resources table.	6

Introduction

This publication is to help with proper installation of the EtherNet/IP™ encoder. It provides publication references and guidelines, product specifications, technical data, and cabling recommendations.

It is required that installation is in accordance with these instructions and implemented by qualified personnel.

Technical Specifications

Use appropriate screws, bolts, or nuts to mount the flange of the encoder to avoid the risk of tampering. Do not over torque the mounting hardware.

The 843ES encoder is intended to be part of the safety-related control system of a machine. Before installation, a risk assessment must be performed to determine whether the specifications of this device are suitable for all foreseeable operational and environmental characteristics of the application. See Specifications for certification information and ratings.

Product Overview

The 843E/843ES encoders are absolute encoders. An absolute encoder has a unique digital output for each shaft position. The use of absolute encoders verifies that true position is always available, regardless of power interruptions to the system. Absolute encoders can be single-turn or multi-turn.

The 843ES encoder was designed to help simplify safety applications with the use of controller-based monitoring functions. The 843ES encoder helps make it easier to achieve the desired safety integrity level (SIL) or Performance Level (PL) because it allows the GuardLogix® 5580 or Compact GuardLogix 5380 safety controllers to monitor position and velocity input values directly.

Specifications

Table 1 - General Specifications

Attribute	Value
Safety Ratings (843ES Encoder Only)	
Category	Cat. 3, HFT = 1
System structure	2 channels (Cat. 3)
Standards Safety Classification	Safety functions according to IEC 61800-5-2 PLe according to ISO 13849-1, ISO 13849-2 SIL 3 per IEC 62061, IEC 61508, and IEC 61800-5-2
Functional safety data	PFH_d = 8.03E-9 (average frequency of a dangerous failure per hour)
Certifications	CE Marked for all applicable directives, cULus (UL 61010), and TÜV. See rok.auto/certifications.
Diagnostic coverage (DC)	≥99%
Error presumptions	IEC 61800-5-2
CIP Safety™	ODVA CIP™ Volume 5
Operating Characteristics	
Supply voltage	10...30V DC (±5%), IEC 61140 PELV power supply, UL 1310 Class 2
Power consumption, max	3 W
No-load supply current	300 mA (at 10V DC)
Load current, max	300 mA
Inrush current, max	1.5 A (at 1 ms)
Communication rate	10/100 Mbit/s
Mission time	20 years

Table 1 - General Specifications

Attribute	Value
Environmental	
Operating temperature (1)	IEC 60068-2-1 (Test Ad, Operating Cold) IEC 60068-2-2 (Test Bd, Operating Dry Heat) IEC 60068-2-14 (Test Nb, Operating Thermal Shock) -40...+80 °C (-40...+176 °F)
Storage temperature	IEC 60068-2-1 (Test Ab, unpackaged nonoperating cold) IEC 60068-2-2 (Test Bb, unpackaged nonoperating dry heat) IEC 60068-2-14 (Test Na, unpackaged nonoperating thermal shock) -40...+80 °C (-40...+176 °F)
Relative humidity	IEC 60068-2-30 (Test Db, unpackaged damp heat); 93%, 40 °C (104 °F) noncondensing
Altitude	<2000 m (6562 ft)
Environment	Dry/wet
Washdown rating	IEC 60529, IP67
Shock	• 6.35 mm (0.25 in.) hollow shaft: IEC 60068-2-27, 275 m/s^2 (28 g), 6 ms • All other models: IEC 60068-2-27, 981 m/s^2 (100 g), 6 ms
Vibration	IEC 60068-2-6 (Test Fc, operating), 8.7...200 Hz, 30 m/s^2 (3.06 g), 200...2000 Hz, 200 m/s^2 (20 g)
UL	File E244298, UL 61010-1, indoor use, outdoor use possible, not designed for direct UV radiation
Pollution degree	IEC 61010, 2
Nano coated (2)	Meets standards EN ISO 9227 - NSS / EN 60068-2-11
Electromagnetic Compatibility (EMC)	
Relevant standards	EN 55011 Class B IEC 61326-1 IEC 61326-3-1 (3)
ESD immunity	IEC 61000-4-2
Radiated EMF immunity	• IEC 61000-4-3: 80...1000 MHz, 10V/m 80% AM 1 kHz; 1.4...2.0 GHz 3V/m 80% AM 1 kHz • IEC 61000-4-3: 80...1000 MHz, 20V/m 80% AM 1 kHz; 1.4...2.0 GHz 10v/m 80% AM 1 kHz; 2.0...2.7 GHz 3V/m 80% AM 1 kHz
Surge transient immunity	IEC 61000-4-5: ±2 kV line-earth (CM) on Ethernet ports
EFT/B immunity	IEC 61000-4-4: ±2 kV at 5 kHz on Ethernet ports
Conducted RF immunity	IEC 61000-4-6: 0.15...80 MHz, 3V/m 80% AM 1 kHz
Magnetic influence, max	IEC 61000-4-8, 100 A/m
Protection	Short circuit, overload, reverse polarity, over voltage, loss of ground
Network	
EtherNet/IP	IEC 61784-1
IP	IPv4
Ethernet connector	Two Ethernet M12, 4-pin, female, D-coded
EtherNet/IP communication rate	10/100 Mbps
Prioritization	Via. 802.1 Q/D
Coarse update rate, max	1 ms
Safe coarse update rate, max	6 ms
Broadcast rate limiting	1%
Jitter	100 ns
Duplex	Full or half

(1) Operating temperature is not equal to ambient temperature. See publication 843-UM001 in Additional Resources on page 6 for details.
(2) 843E models only. Nano coated version cat. nos. end in a C (example: 843E-SIP7BA6**C**).
(3) 843ES encoders only.

Table 2 - Mechanical Specifications

Attribute	Solid Shaft	Hollow Shaft
Housing material	Aluminum: EN AC 44300	
Shaft material	Stainless steel: 1.4305	
Flange material	Aluminum: EN AW-2011	
Moment of inertia	Approx. 10E-6 kg m^2 (4.4E-6 lb•ft-s^2]	
Start torque	0.01 N•m (0.088 lb•in) (20 °C [68 °F])	
Operating torque	0.01 N•m (0.088 lb•in) (20 °C [68 °F])	
Shaft load	80 N (17.9 lb) radial, 40 N (9 lb) axial	
Rotational speed, max	9000 RPM, max (<10 min) 6000 RPM (typical operation)	
Acceleration, max	1E6 rad/s^2	

Table 2 - Mechanical Specifications

Attribute	Solid Shaft	Hollow Shaft
Shaft sizes [mm (in.)]	• 9.525 (3/8) • 10 (0.39) • 12 (0.47)	• 6.35 (1/4) • 12 (0.47) • 8 (0.31) • 12.7 (1/2) • 9.525 (3/8) • 14 (0.55) • 10 (0.39) • 15 (0.59)
Shaft keys	Conforms to DIN 6885-A M4 threaded hole	–
Shaft fit	f7	H7
Shaft insertion depth	–	≥25.5 mm (1.0 in.)
Flanges [mm (in.)]	58 (2.28) Clamp flange, 58 (2.28) Synchro flange, 63.5 (2.5) Square flange	With stator coupling, 63 (2.48)
Power connector	4-pin, male, A-coded	
Weight, approximate	0.45 kg (15.87 oz)	

Table 3 - Resolution/Revolution Specifications

Attribute	Single-turn	Multi-turn
Performance Capabilities		
Absolute resolution	262,144 counts per turn (18 bit)	4096 turns (12 bit)
Safe absolute resolution	32,768 counts per turn (15 bit)	4096 turns (12 bit)
Smallest safe measuring step	158.4 arcsec (0.044°)	
Startup time	10 s	
Code direction	CW or CCW programmable	

Approximate Dimensions

IMPORTANT To simplify the drawings and information, unless otherwise specified, the general tolerances with tolerance class m (medium) according to ISO 2768-1 apply.

Figure 1 - Solid Shaft with Clamping Flange [mm (in.)]

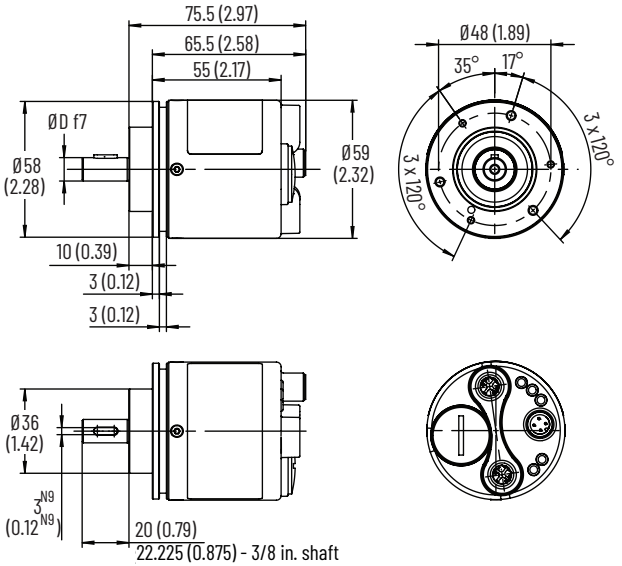

Figure 2 - Solid Shaft with Synchro Flange [mm (in.)]

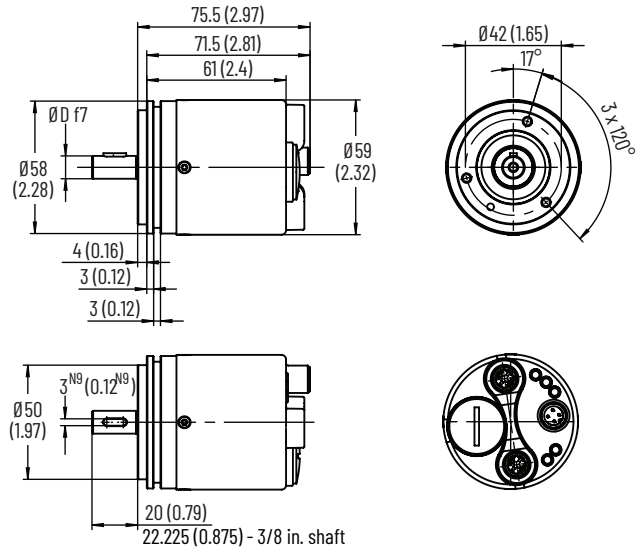

Figure 3 - Solid Shaft with Square Flange [mm (in.)]

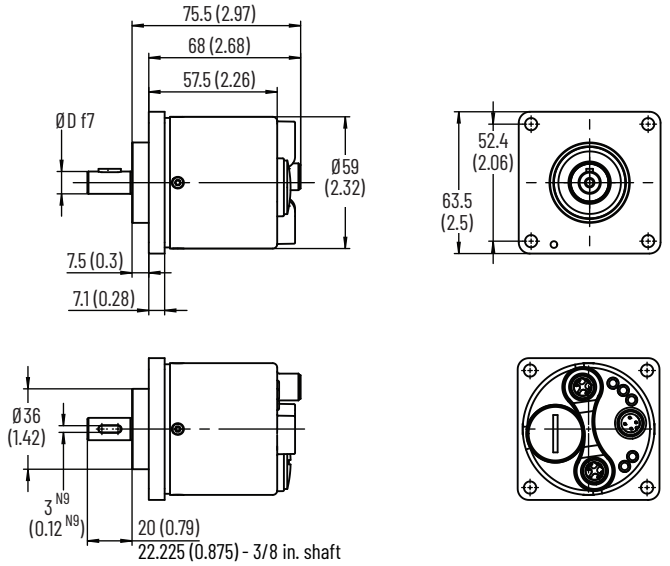

Figure 4 - Hollow Shaft with Stator Coupling 63 mm (2.5 in.) Diameter [mm (in.)]

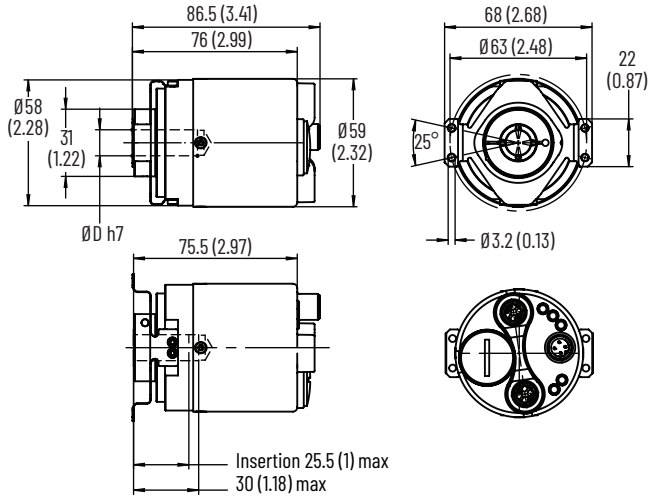

Figure 5 - Hollow Shaft with Stator Coupling 63 mm (2.5 in.) Diameter with Ø 6.35 mm (0.25 in.) Hollow Shaft [mm (in.)]

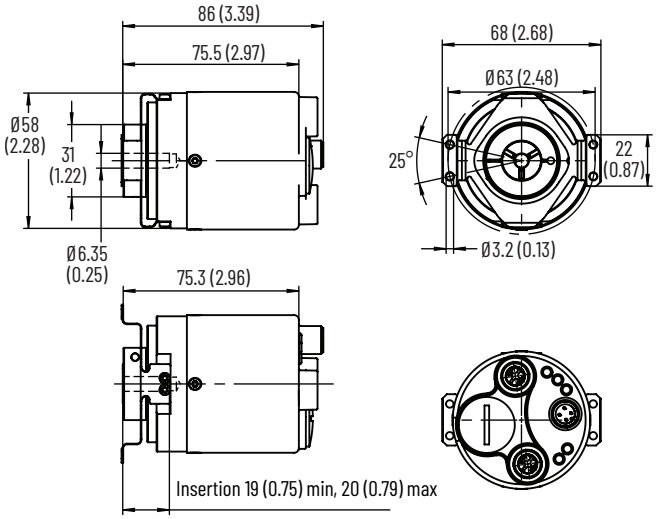

Figure 6 - Hollow Shaft Flange with 150 mm (5.9 in.) Torque Arm [mm (in.)]

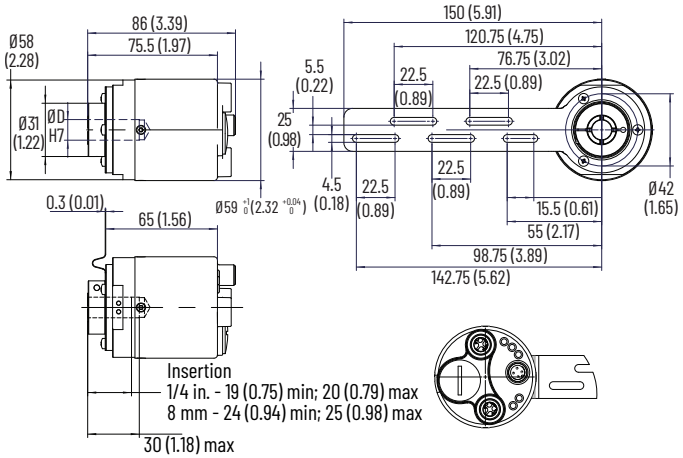

Figure 7 - Hollow Shaft Flange with 150 mm (5.9 in.) Torque Arm and Ø 6.35 mm (0.25 in.) Hollow Shaft [mm (in.)]

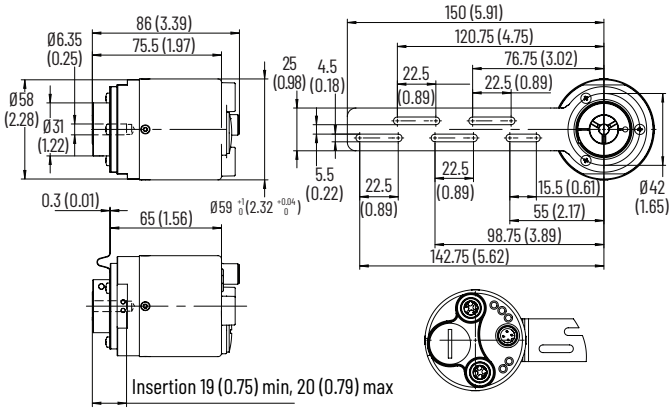

Figure 8 - Application Requirements for Hollow Shaft Encoders

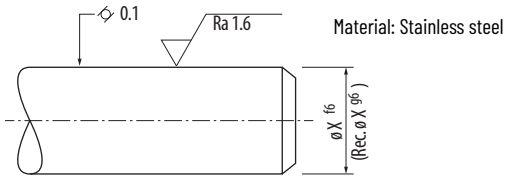

Encoder Installation

Figure 9 - Flexible Shaft Couplings

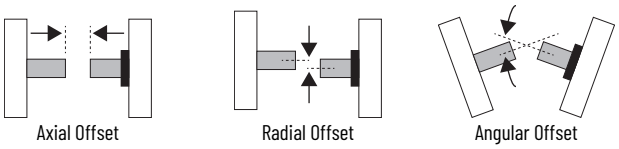

ATTENTION: Rigidly coupling the encoder shaft to the machine shaft causes a failure in either the bearings or the encoder or the bearings of the machine shaft.

IMPORTANT Both Ethernet ports are provided with a plastic cap. If only one port is used, the cap of the unused port must be tightened at a torque of 1 N•m [8.9 lb•in] to maintain the IP protection level.

Table 4 - Four-pin M12 Ethernet Connector

Pin	Signal	Color	Pair Assignment
1	Transmit Data +	White Orange	Pair 1
2	Receive Data +	Orange	
3	Transmit Data -	White Green	Pair 2
4	Receive Data -	Green	

Table 5 - Four-pin M12 Power Connector

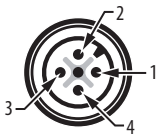

Pin	Signal	Color	Pair Assignment
1	Voltage +	Brown	Supply Voltage 10...30V
2	–	White	–
3	Voltage -	Blue	Supply Voltage 0V
4	–	Black	–

Mechanical Installation

ATTENTION: Do not connect rigidly the stator and the rotor. The encoder would be mechanically constrained and thus damaged.
- With solid shaft encoders, always use a tolerance-compensating element between the drive shaft and the encoder shaft
- With hollow shaft encoders, always use a tolerance-compensating element between the encoder flange and the drive flange.

IMPORTANT Comply with the maximum permissible shaft offset.
- Axial offset: < ± 0.25 mm [0.01 in.]
- Radial offset: < ± 0.20 mm [0.008 in.]

The values that are specified for the radial and axial offset are maximum values, which must not occur simultaneously. If shaft displacements nevertheless occur simultaneously, their share in the sum must not exceed 100% of the specified maximum values.

ATTENTION: IEC 61800-5-2 defines the loosening of mechanical connection (between the encoder and the drive) as a fault that requires consideration. Fault exclusion is required for the coupling elements if the control cannot detect this fault. Therefore, design the coupling between the encoder and apparatus for fault exclusion so that any possibility of breakage at the coupling can be ruled out. To achieve this fault exclusion, the encoder mechanical limits and mounting practices in this document must be considered.

When installing, follow the descriptions and specifications of the couplings that are used. The coupling influences the system accuracy of the drive unit, so verify that the coupling is stiff and non-slip.

Make sure that the shaft couplings are designed so that a breakage of the connection can be excluded. Conduct a risk analysis before installation and consider the following aspects:

- Counter-torque of the encoder
- Maximum permissible shocks and vibrations
- Maximum permissible acceleration
- Permissible geometrical deviations in the ideal orientation of the shafts
- Permissible temperatures and humidity ranges
- Required angular accuracy

For this assembly, use only inspected and calibrated tooling that is subject to the quality system. Unless otherwise specified, a friction coefficient of 0.14 assumed for all screw connections, and a strength property class of 8.8 (metric) or Grade 5 (imperial) assumed for the screws. Use coated screws, threadlocker, or SCHNORR® washers to keep screws secure. We recommend adding additional protection against manipulation by marking the fastening screws with locking varnish or similar.

Mount with a Solid Shaft

IMPORTANT For solid shaft encoders, a suitable shaft coupling that meets the requirements of the application must be used.

1. Be sure to select the proper size flexible coupling clamp to mate to the encoder shaft. See publication 847-TD001 in Additional Resources on page 6 for encoder accessories.
2. To determine the encoder mounting hole locations, see Approximate Dimensions on page 2.
3. Fasten the encoder and tighten with three size M3 mounting screws (provided with the flange).
4. Tighten the screws at a torque of 1 N•m (8.9 lb•in) and secure them against loosening.
5. Check the shafts for offset. The maximum permissible tolerances depend on the selected shaft coupling.
6. Connect the encoder and load shaft with a flexible coupling.
7. During assembly, protect the coupling element against excessive bending and damage.
8. Center the flexible coupling, screw the coupling without preload, and secure it against loosening.
9. Rotate the machine slowly and verify that the flexible coupling is not deforming beyond specifications.
10. Align machine to its mechanical zero or home position.

Mount with a Hollow Shaft

For hollow shaft encoders, the coupling elements (for example, a stator coupling or a compensating torque stop) are factory-mounted.

IMPORTANT
- Verify that the insertion depth of the load shaft into the hollow shaft encoder is ≥25.5 mm (1.0 in.)
- Verify that the mating shaft is chamfered and grease-free.

1. Check the shafts for offset. The maximum allowed shaft connection tolerances are:
   - Axial offset < ±0.25 mm (0.01 in.)
   - Radial offset < ±0.20 mm (0.008 in.)
2. Slide the encoder onto the mating shaft until the flex mount rests on the machine surface. Minimum insertion depth for hollow shaft is 25.5 mm (1.0 in.).

ATTENTION: The encoder slides freely onto the shaft; if not, do not force. Check the shaft for interferences such as gouges, burrs, rust, or size.

3. Hold encoder firmly and mark the two mounting holes. (If mounting holes exist, proceed to step 6.)

IMPORTANT Do not stress the flex mount while tightening the screws.

4. Slide the encoder off. To accept M3 (or equivalent) screws, drill and tap the marked holes.
5. Slide the encoder back onto the shaft until the flex mount rests on the machine surface.
6. Attach the encoder with two M3 (or equivalent) screws. Screw the stator coupling and the torque stop without preload on the drive flange. Tighten the screws to 1 N•m [8.9 lb•in].
7. Tighten the clamping ring screw to 2.5 N•m (22.1 lb•in).
8. Align machine to its mechanical zero or home position.

Electrical Installation

ATTENTION:
- Make sure that the operating voltage is switched on or off simultaneously for the encoder and the downstream device.
- Electrostatic discharges at the contacts of the connector or at the cable ends could damage or destroy the device. Take appropriate precautionary measures.
- Use a PELV supply voltage source according to IEC 60204-1 complying with the proper operating voltage and the maximum permissible output current.

IMPORTANT To connect the encoder, refer to the corresponding operating and safety instructions of the external drive system/encoder evaluation system.

When assembling a mating connector, comply with the instructions that are attached to the connector.

IMPORTANT Verify that all required cable wires/connectors are connected before commissioning. Insulate individually all unused ends of the output signals to avoid short-circuits.

Route the encoder cable free of any tension, so that no additional force is applied to the encoder. Consider the minimum bending radius of the connection cable.

Connectivity Considerations

ATTENTION: Before connecting or disconnecting the signal cable, always disconnect the power supply and secure it against switching on again.

Consider using the shortest length possible for both Ethernet and power cables. Run Ethernet cables separate from power cables and run the DC power cable away from AC power.

Verify that no other devices with high interference levels such as frequency converters, solenoid valves, or contactors, are connected to the same power supply as the encoder. Otherwise, use suitable voltage filtering.

We recommend shielded twisted-pair cables for both Ethernet and power connections. These cables help avoid disruptions of signals from electrical noise and from mechanical vibration and shock that are common in most industrial environments. When installing the shielded cables, you must follow the recommended installation guidelines to avoid ground loops. You must comply with the maximum permissible connection cable length.

For shielded Ethernet cables, you must provide an equipotential grounding network that overlays the existing electrical grounding and bonding system for safety and fire. If you cannot provide an equipotential ground and the second connection from the encoder is going to a switch, install a patch panel to break the shield to the switch. Switches typically connect jack shield directly to the ground lug, which connects the shield directly to ground.

Diagnostics

After switching on the power supply, wait at least 10 seconds until the encoder is ready for operation and interfaces are ready for communication. The encoder communicates with the digital interface after this period.

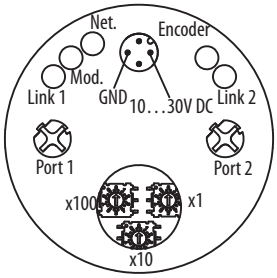

Module Status Indicator	Short Description
OFF	No power
Green flashing	Standby/idle
Green solid	Device operational
Red flashing	Minor fault
Red solid	Major fault
Green/red flashing	Self-test Device not configured

Network Status Indicator	Short Description
OFF	No power/IP address
Green flashing	Not connected
Green solid	Connected
Red flashing	Minor fault
Red solid	Major fault
Green/red flashing	Self-test Fast flashing during safety commissioning

Encoder Status Indicator	Short Description
Green solid	Power ON
OFF	No power

Link 1/Link 2 Status Indicator (1)	Short Description
OFF	No link/power OFF
Green solid	Ethernet connection is established
Green flashing	Data transmission/port active

(1) The Ethernet link status indicators (Link 1 and Link 2) display the status of the physical connection on the Ethernet interface.

Rotary Switches

- Set switches in the range of 001...254 to set IP address 192.168.1.*xxx* (where *xxx* represents the switch settings)
- Subnet mask = 255.255.255.0
- Gateway address = 192.168.1.1
- It is recommended to set the rotary switches to a valid number before installing the module
- If rotary switches are not set to a valid number, the encoder attempts to use the BOOTP/DHCP server to set the IP address
- The encoder is shipped with this configuration:
  - BOOTP/DHCP enabled
  - Rotary switches set to 999 — when applicable

ATTENTION: The EtherNet/IP communication module must be assigned a fixed network address. The IP address of this module must not be provided dynamically.
Failure to observe this precaution can result in unintended machine motion or loss of process control.

Declaration of Conformity

For the Declaration of Conformity, visit rok.auto/certifications.

Additional Resources

To download publications, visit rok.auto/literature and search for the following publication numbers.

Resources	Descriptions
Cordsets and Field Attachables Technical Data, publication 889-TD002	Provides technical specifications for power cables and attachables.
Ethernet Media Specifications Technical Data, publication 1585-TD001	Provides technical specifications for Ethernet media cables and accessories.
High-Resolution Incremental Optical Encoders Tech Data, publication 847-TD001	This publication includes descriptions of Allen-Bradley® encoder accessories.
Kinetix® 5700 Safe Monitor Functions Safety Reference, publication 2198-RM001	Provides information on controller-based safety functions.
EtherNet/IP Absolute Encoders: Standard and CIP Safety Models User Manual, publication 843-UM001	Provides information on configuration and operation of 843E EtherNet/IP and 843ES CIP Safety encoders.
EtherNet/IP Network Devices User Manual, publication ENET-UM006	Information on how to build and use EtherNet/IP communication modules in Logix 5000™ control systems.
Guidance for Selecting Cables for EtherNet/IP Networks, publication ENET-WP007	Provides guidance on selection of cables based on the application, environmental conditions, and mechanical requirements.
System Design for Control of Electrical Noise, publication GMC-RM001	Provides information, examples, and techniques that are designed to minimize system failures caused by electrical noise.
Open DeviceNet Vendors Association (ODVA) Media Planning and Installation Manual, publication PUB00148R0	Provides information on Equipotential grounding and bonding.
Safety of Machinery – Safe Related Parts of Control Systems, standard ISO 13849	Provides safety requirements and guidance on the principles for the design of safety-related parts of control systems.
Functional safety of Electrical/Electronic/ Programmable Electronic safety-related systems, standard IEC 61508	Provides considerations when electrical/electronic/ programmable electronic systems are used to conduct safety functions.
Industrial Automation Wiring and Grounding Guidelines, publication 1770-4.1	Provides general guidelines for installing a Rockwell Automation® industrial system.
Product Certifications website, rok.auto/certifications	Provides declarations of conformity, certificates, and other certification details.

Waste Electrical and Electronic Equipment (WEEE)

At the end of life, this equipment should be collected separately from any unsorted municipal waste.

Rockwell Automation maintains current product environmental compliance information on its website at rok.auto/pec.

Your comments help us serve your documentation needs better. If you have any suggestions on how to improve our content, complete the form at rok.auto/docfeedback.
For technical support, visit rok.auto/support.

Rockwell Otomasyon Ticaret A.Ş. Kar Plaza İş Merkezi E Blok Kat:6 34752, İçerenköy, İstanbul, Tel: +90 (216) 5698400 EEE Yönetmeliğine Uygundur

Connect with us.

rockwellautomation.com — expanding **human possibility**®

AMERICAS: Rockwell Automation, 1201 South Second Street, Milwaukee, WI 53204-2496 USA, Tel: (1) 414.382.2000, Fax: (1) 414.382.4444
EUROPE/MIDDLE EAST/AFRICA: Rockwell Automation NV, Pegasus Park, De Kleetlaan 12a, 1831 Diegem, Belgium, Tel: (32) 2 663 0600, Fax: (32) 2 663 0640
ASIA PACIFIC: Rockwell Automation, Level 14, Core F, Cyberport 3, 100 Cyberport Road, Hong Kong, Tel: (852) 2887 4788, Fax: (852) 2508 1846

Allen-Bradley, GuardLogix, Guardmaster, Integrated Architecture, Kinetix, Logix 5000, Rockwell Automation, and Rockwell Software are trademarks of Rockwell Automation, Inc.
CIP, CIP Safety, and EtherNet/IP are trademarks of ODVA, Inc.
Trademarks not belonging to Rockwell Automation are property of their respective companies.

Publication 843-IN001A-EN-P - September 2021 | Supersedes Publication 843ES-IN001B-EN-P - February 2020
Copyright © 2021 Rockwell Automation, Inc. All rights reserved. Printed in the U.S.A.
10004655158 Ver 01