Installation Instructions

FLEX Ex Bus Isolator and Flexbus Connector

Catalog Numbers 1797-BIC, 1797-CEC

Topic	Page
Important User Information	2
About the Isolator and Flexbus Connector	3
Product Features	4
Intermixed Systems	4
Module Installation	5
Installation in Zone 2	10
Installation in Zone 22	10
Electrostatic Charge	11
Removal and Insertion Under Power	11
European Communities (EC) Directive Compliance	12
Inputs and Outputs	15
Wire the Isolator Module	16
Indicators	17
About the Mounting Kit	17
Specifications	20

Publication 1797-IN513G-EN-P - August 2017

Important User Information

Solid state equipment has operational characteristics differing from those of electromechanical equipment. Safety Guidelines for the Application, Installation and Maintenance of Solid State Controls (Publication SGI-1.1 available from your local Rockwell Automation sales office or online at http://www.literature.rockwellautomation.com) describes some important differences between solid state equipment and hard-wired electromechanical devices. Because of this difference, and also because of the wide variety of uses for solid state equipment, all persons responsible for applying this equipment must satisfy themselves that each intended application of this equipment is acceptable.

In no event will Rockwell Automation, Inc. be responsible or liable for indirect or consequential damages resulting from the use or application of this equipment.

The examples and diagrams in this manual are included solely for illustrative purposes. Because of the many variables and requirements associated with any particular installation, Rockwell Automation, Inc. cannot assume responsibility or liability for actual use based on the examples and diagrams.

No patent liability is assumed by Rockwell Automation, Inc. with respect to use of information, circuits, equipment, or software described in this manual.

Reproduction of the contents of this manual, in whole or in part, without written permission of Rockwell Automation, Inc., is prohibited.

Throughout this manual we use notes to make you aware of safety considerations.

WARNING	Identifies information about practices or circumstances that can cause an explosion in a hazardous environment, which may lead to personal injury or death, property damage, or economic loss.
IMPORTANT	Identifies information that is critical for successful application and understanding of the product.
ATTENTION	Identifies information about practices or circumstances that can lead to personal injury or death, property damage, or economic loss. Attentions help you identify a hazard, avoid a hazard, and recognize the consequences.
SHOCK HAZARD	Labels may be on or inside the equipment to alert people that dangerous voltage may be present.
BURN HAZARD	Labels may be on or inside the equipment to alert people that surfaces may reach dangerous temperatures.

About the Isolator and Flexbus Connector

Use the FLEX Ex bus isolator to interconnect standard FLEX I/O modules to intrinsically-safe FLEX Ex modules in the same I/O group

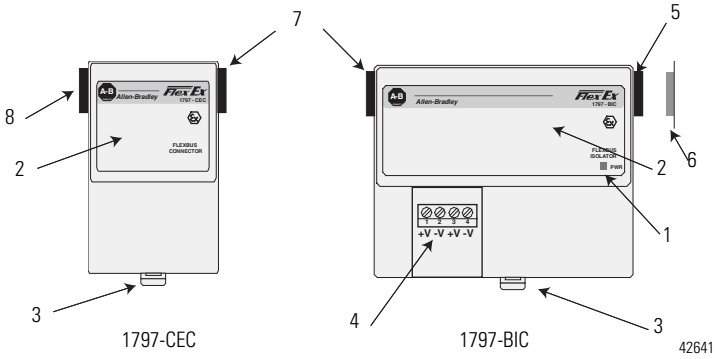

Component Identification	
1	Power indicators
2	Label
3	Module locking tab
4	Removable power connector
5	FLEX Ex backplane connector
6	FLEX Ex backplane connector cover
7	Master backplane connector
8	FLEX I/O backplane connector

Product Features

- Provides an IS-compatible mechanism to separate two sections of the backplane allowing IS and non-IS field-device wiring to the same I/O group.
- Converts hazardous power to IS-safe power to run one side of the bus receiver/transmitter circuitry and IS-safe FLEX Ex backplane power to slave side modules.
- Allows up to eight FLEX Ex modules may be attached to the slave side.

Intermixed Systems

The bus isolator modules, 1797-BIC and 1797-CEC, let you configure FLEX Ex modules and FLEX I/O modules on the DIN rail when attached to the same adapter and grouped together on appropriate sides of the bus isolator module. This highly flexible, cost-effective solution combines intrinsically safe and nonintrinsically safe systems.

Intermixed systems can be configured for use in the:

- safe area much like traditional IS and I/O systems.
- hazardous and safe control equipment where the distance of physical separation is short.
- FLEX Ex I/O with communication adapters that are not intrinsically safe.

Mix Systems in the Safe Area

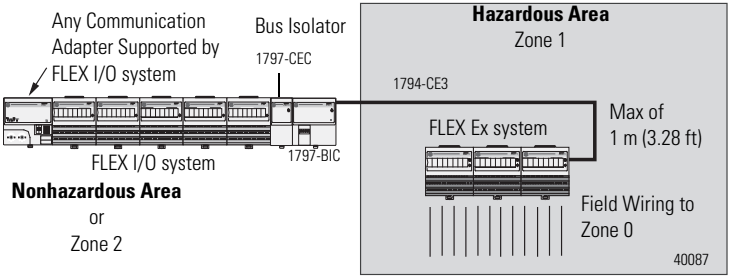

Module Installation

ATTENTION

This equipment is considered Group 1, Class A industrial equipment according to IEC/CISPR Publication 11. Without appropriate precautions, there may be potential difficulties ensuring electromagnetic compatibility in other environments due to conducted as well as radiated disturbance.

This equipment is supplied as open-type equipment. It must be mounted within an enclosure that is suitably designed for those specific environmental conditions that will be present and appropriately designed to prevent personal injury resulting from accessibility to live parts. The interior of the enclosure must be accessible only by the use of a tool. Subsequent sections of this publication may contain additional information regarding specific enclosure type ratings that are required to comply with certain product safety certifications.

These products are grounded through the DIN rail to the dedicated intrinsic safety ground. Use zinc plated yellow-chromate steel DIN rail to assure proper grounding. The use of other DIN rail materials (such as aluminum or plastic) that can corrode, oxidize, or are poor conductors, can result in improper or intermittent grounding.

Make certain that you only connect the FLEX Ex backplane connector to other intrinsically-safe system modules to maintain the integrity of the intrinsically-safe backplane.

ATTENTION

For proper operation, cycle power to the 1797-BIC module at the same time power is cycled to the associated adapter.

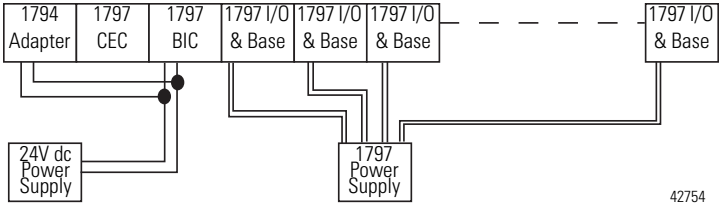

1797-CEC Module Installation

The 1797-CEC module mounts on a DIN rail. It connects to an adapter or another FLEX I/O module. If using this module with FLEX I/O modules, do not mount between FLEX I/O modules. Mount the 1797-CEC module to the right of FLEX I/O modules. Follow these steps to mount this module.

1. Remove the cover plug (if used) in the male connector of the unit to which you are connecting this module.

2. Position the module on the 35 x 7.5 mm DIN rail **A** (A-B pt. no. 199-DR1).

3. Rotate the module onto the DIN rail with the top of the rail hooked under the lip on the rear of the module.

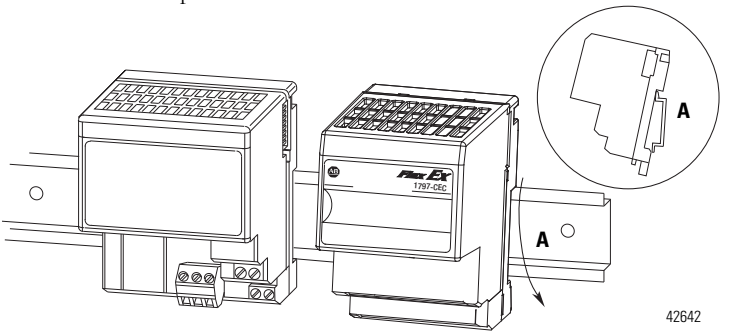

4. Press down to lock the module on the DIN rail.

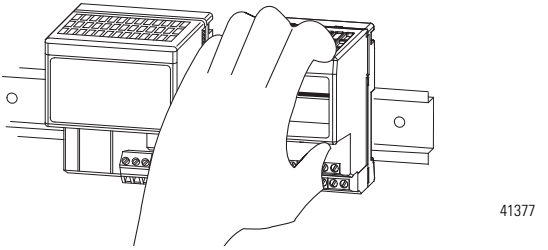

If the module does not lock in place, use a screwdriver or similar device to move the locking tab down, press the module flush with the DIN rail and release the locking tab to lock the module in place.

5. Firmly push the module into the adjacent module or terminal base until the units lock together.

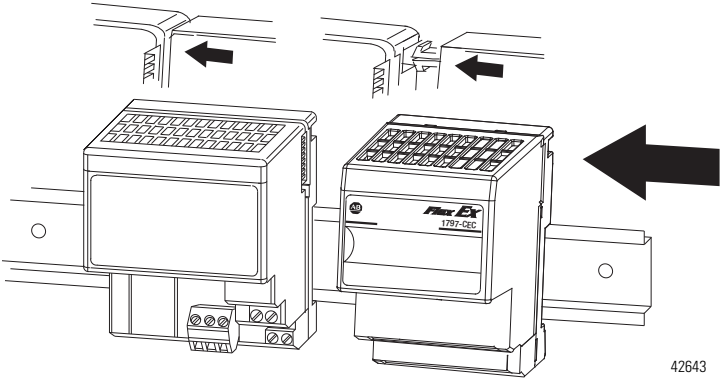

6. To remove the 1797-CEC module, you must work from the right side and remove one module at a time. To disengage a module from its neighbor, place a common, flat-bladed screwdriver between the two modules and turn 1/4 turn to separate the modules.

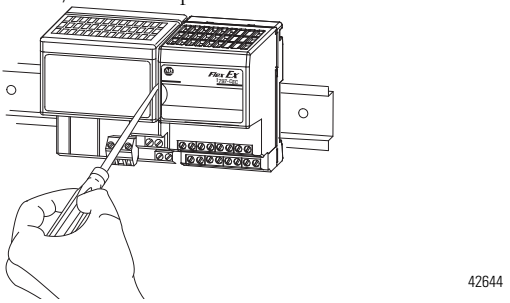

7. Then slide the module away from its left neighbor, and release the locking lever to remove the module from the DIN rail.

Install the 1797-BIC Module

The 1797-BIC module mounts on a DIN rail. It connects to a 1797-CEC module.

1. Remove the cover plug (if used) in the male connector of the unit to which you are connecting this module.

2. Position the module on the 35 x 7.5 mm DIN rail **A** (A-B pt. no. 199-DR1).

3. Rotate the module onto the DIN rail with the top of the rail hooked under the lip on the rear of the module.

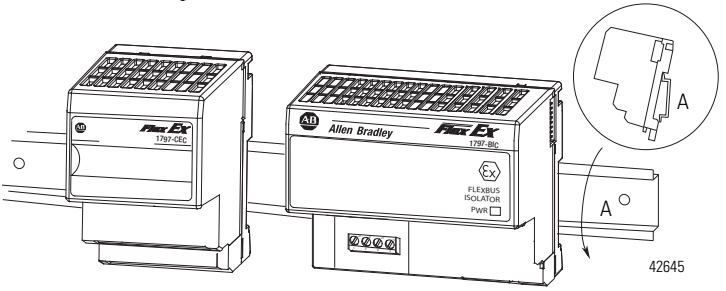

4. Press down to lock the module on the DIN rail.

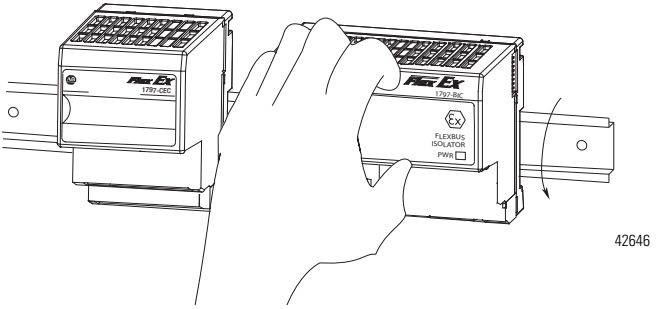

If the module does not lock in place, use a screwdriver or similar device to move the locking tab down, press the module flush with the DIN rail, and release the locking tab to lock the module in place.

5. Firmly push the module into the adjacent module/terminal base until the units interconnect.

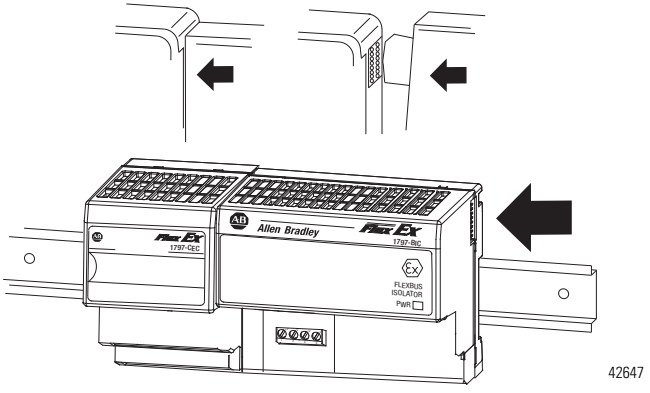

6. Install DIN rail locks (supplied with the 1797-BIC module) to meet shock and vibration specifications as listed on page 20.

7. To remove the 1797-BIC module, remove the DIN-rail locks and then slide the module away from its left neighbor, and release the locking lever to remove the module from the DIN rail.

WARNING

Do not remove the 1797-CEC or 1797-BIC modules under power. Removing these modules under power will break the electrical backplane (flexbus) connections. This can cause personal injury or property damage by:

- sending an erroneous signal to your system's field devices causing unintended machine motion.
- causing an explosion in a hazardous environment.
- breaking communication to modules beyond this module.

Installation in Zone 2

The 1797-CEC and 1797-BIC modules must not be exposed to the environment. These modules have a protection factor of IP20. Provide a suitable metal enclosure.

WARNING

The 1797-BIC module cannot be used as an associated apparatus after its FLEX Ex backplane connector has been exposed to nonintrinsically safe signals.

Installation in Zone 22

When the modules are installed in Zone 22, the following cabinets must be used: IVK-ISRPI-V16LC; IVK-ISRPI-V8HYW; or IVK-ISRPI-V8LC. These cabinets can be purchased from:

Pepperl+Fuchs GmbH
Lilienthalstrasse 200
68307 Mannheim, Germany
Attn: PA Sales Dept.
Kirsten Becker
Telephone +49 776 1298
www.pepperl-fuchs.com

The IS-RPI cabinets (type IVK2-ISRPI-V8LC, IVK2-ISRPI-V8HYW, or IVK2-ISPRI-V16LC) ensures the basic protection for the intrinsically safe apparatus of the FLEX Ex system for use in Zone 22. It corresponds with category 3D according to RL 94/9 EG and with the type label marked with the following information:

Pepperl+Fuchs GmbH
68307 Mannheim
IVK2-ISRPI-V8LC (or IVK2-ISRPI-V8HYW or IVK2-ISRPI-V16LC)
Ex II 3 D Ex tD A22 IP54 T70 °C X
CE
Serial (manufacturing) number
Model

Electrostatic Charge

Protect the system against electrostatic charge. Post a sign near this module: **WARNING Avoid electrostatic charging.**

ADVERTÊNCIA! PREVENIR CONTRA O ACÚMULO DE CARGA ELETROSTÁTICA.

For your convenience, a sign that can be cut out is included in this installation instruction.

Removal and Insertion Under Power

WARNING

Do not remove the 1797-CEC or 1797-BIC modules under power. Removing these modules under power will break the electrical backplane (flexbus) connections. This can cause personal injury or property damage by:

- sending an erroneous signal to your system's field devices causing unintended machine motion.
- causing an explosion in a hazardous environment.
- breaking communication to modules beyond this module.

European Communities (EC) Directive Compliance

If this product has the CE mark it is approved for installation within the European Union and EEA regions. It has been designed and tested to meet the following directives.

EMC Directive

These products are tested to meet the Council Directive 2014/30/EU by applying the following standards:

- EN 61000-6-4:2007, Electromagnetic Compatibility (EMC) - Part 6-4: Generic Standard for Industrial Environments (Class A)
- EN 61000-6-2:2005, Electromagnetic Compatibility (EMC) - Part 6-2: Generic Standards - Immunity for Industrial Environments
- EN 61326-1:2013 (Industrial), Electrical Equipment For Measurement, Control, and Laboratory Use - Industrial EMC Requirements

European Hazardous Location Approval (For 1797-BIC)

The following applies to products marked CE Ex II 2G and CE Ex II 2D

- Are Equipment Group II, Equipment Category 2, and comply with the Essential Health and Safety Requirements relating to the design and construction of such equipment given in Annex II to Directive 2014/34/EU. See the EC Declaration of Conformity at http://www.rockwellautomation.com/products/certification for details.
- The type of protection is "[Ex ib] IIC" and "[Ex ibD]" according to EN 60079-11.
- Comply to Standards EN 60079-0:2006, EN 60079-11:2007, EN 61241-0:2006, and EN 61241-11:2006, reference certificate number DMT 00 ATEX E 056.
- Are intended for use in areas in which explosive atmospheres caused by gases, vapors, mists, or air are likely to occur occasionally. Such locations correspond to Zone 1 or 2 classification according to ATEX directive 2014/34/EU.

European Hazardous Location Approval (For 1797-CEC)

The following applies to products marked CE Ex II 3 G:

- Are Equipment Group II, Equipment Category 3, and comply with the Essential Health and Safety Requirements relating to the design and construction of such equipment given in Annex II to Directive 2014/34/EU. See the EC Declaration of Conformity at http://www.rockwellautomation.com/products/certification for details.
- Compliance with the Essential Health and Safety Requirements has been assured by compliance with EN 60079-15:2005 and EN 60079-0:2006.
- The type of protection is "Ex nA IIC T4" according to EN 60079-15.

IEC Hazardous Location Approval (For 1797-BIC only)

The following applies to products with the IECEx certification:

- Are intended for use in areas in which explosive atmospheres caused by gases, vapors, mists, or air are likely to occur only infrequently and for short periods. Such locations correspond to Zone 1 or 2 classification to IEC 60079-0.
- The type of protection is "[Ex ib] IIC" according to IEC 60079-11.
- Comply to Standards IEC 60079-0:2004, IEC 60079-11:2006, reference IECEx certificate number IECEx BVS 09.0025X.

FM Compliance

If this product has the FM mark, it has been designed, evaluated, tested, and certified to meet the following standards:

- FM C1. No.3600:1998, Electrical Equipment for Use in Hazardous (Classified) Locations General Requirements
- FM C1. No.3610:1999, Intrinsically Safe Apparatus and Associated Apparatus for Use in Class I, II, III Division 1 Hazardous (Classified) Locations

- FM C1. No.3615:1989, Explosionproof Electrical Equipment General Requirements
- FM C1. No.3810:1989, 1995, Electrical and Electronic Test, Measuring and Process Control Equipment
- ANSI/NEMA 250, 1991, Enclosures for Electrical Equipment

USL Compliance

If this product has the UL mark, it has been designed, evaluated, tested, and certified to meet the following standards:

- UL 913, 5th Edition, Intrinsically Safe Apparatus and Associated Apparatus for Use in Class I, II, III, Division 1, Hazardous (Classified) Locations
- UL 1604, 3rd Edition, Electrical Equipment for Use in Class I and II, Division 2, and Class III Hazardous (Classified) Locations
- UL 1203, 2nd Edition, Explosion-Proof and Dust-Ignition-Proof Electrical
- Equipment for Use inHazardous (Classified) Locations
- UL 2279, 1st Edition, Electrical Equipment for Use Class I, Zone 0, 1, and 2 Hazardous (Classified) Locations
- UL 508, 17th Edition, Standard for Industrial Control Equipment Switches

CNL Compliance

If this product has the cUL mark, it has been designed, evaluated, tested, and certified to meet the following standards:

- CAN/CSA C22.2 No. 157-92, Intrinsically Safe and Non-Incendive Equipment for Use in Hazardous Locations
- CAN/CSA C22.2 No. 30-M1986, Explosion-Proof Enclosures for Use in Class I Hazardous Locations
- CAN/CSA E79-0-95, Electrical apparatus for explosive gas atmospheres - Part 0: General requirements
- CAN/CSA E79-11-95, Electrical apparatus for explosive gas atmospheres - Part 11: Intrinsic safety "i"
- CAN/CSA C22.2 No. 14-95, Industrial Control Equipment

- CAN/CSA E79-15-95, Electrical apparatus for explosive gas atmospheres - Part 15: Electrical Apparatus with Type of Protection "n"

Inputs and Outputs

Do not apply any noninstrinsically safe signals to the FLEX Ex backplane connector.

When using as an intrinsically safe electrical apparatus according to EN 60079-11, the European directives and regulations must be followed.

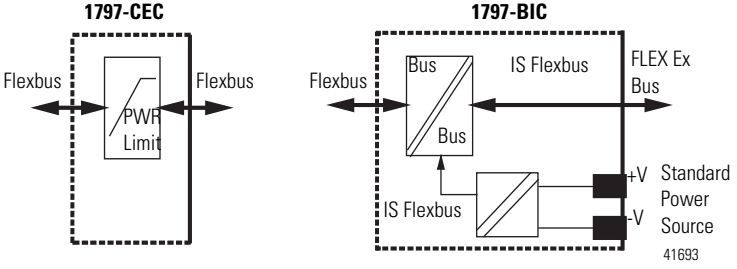

Wire the Isolator Module

ATTENTION

When connecting wiring, torque terminal screws to 0.8…1.0 Nm (7…9 lb-in).

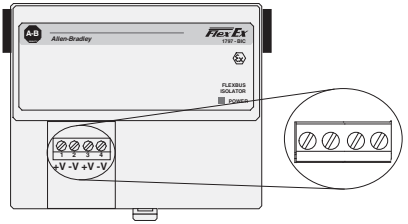

WARNING

Make certain that you power this device with normal 24V dc. Do not use an intrinsically-safe power supply, such as the 1797-PS2E or 1797-PS2N, to power this module.

If you connect or disconnect wiring while the field-side power is on, an electrical arc can occur. This could cause an explosion in hazardous location installations. Be sure that power is removed or the area is nonhazardous before proceeding.

1. Apply +V and -V power (24V dc) to the adapter through a removable terminal block.

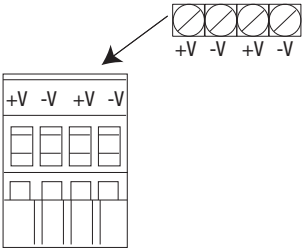

Screw terminals and spring terminals are provided.

2. Strip the +V and -V wires to a length so no bare conductor shows after inserting the wires into position (+V, -V).

3. If you are using the spring terminals of the plug, insert a screwdriver into the slot and **carefully** pry until the spring clamp opens to accept the wire.

4. Connect either a 1797-TB3 terminal base, a 1794-CE1 cable, or a 1794-CE3 cable onto the FLEX Ex backplane connector of the 1797-BIC module.

ATTENTION

The FLEX Ex backplane connector cover must remain in place until a FLEX Ex terminal base or cable is connected to the 1797-BIC module.

Indicators

The 1797-BIC isolator module provides a power indicator to show power has been applied to the module.

About the Mounting Kit

Use the optional 1794-NM1 mounting kit to mount your system on a panel or wall without a DIN rail.

1794-NM1
Mounting Kit with
18 screws (2 screws for the adapter and 2 screws for each module).

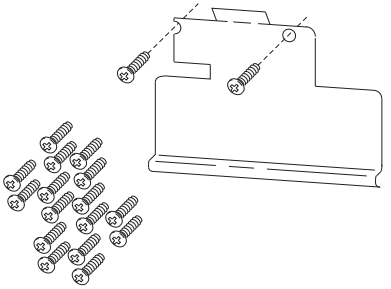

30238

Dimensions for Mounting the 1797-BIC Isolator Module

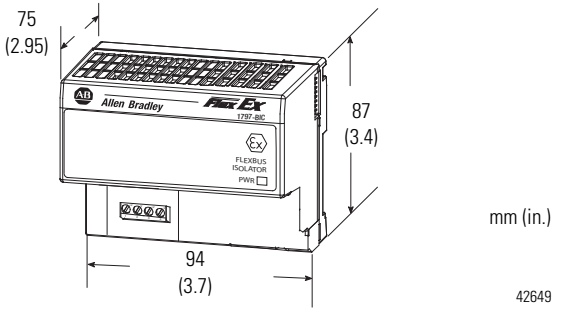

ATTENTION

The DIN rail or mounting bracket must be appropriately connected to the dedicated intrinsic safety ground.

Repair

The 1797-BIC isolator module is not field-repairable. Any attempt to open the module will void its warranty and the IS certification. If repair is necessary, return the module to the manufacturer.

Dimensions for Mounting the 1797-CEC Flexbus Connector

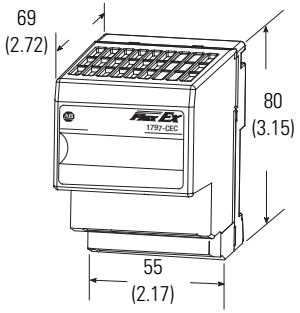

ATTENTION

The DIN rail or mounting bracket must be appropriately connected to the dedicated intrinsic safety ground.

Repair

The 1797-CEC Flexbus Connector module is not field-repairable. Any attempt to open the module will void its warranty. If repair is necessary, return the module to the manufacturer

Specifications

Table 1 1797-BIC Flex Ex Bus Isolator

Attribute	Value
I/O module capacity	8 FLEX Ex modules[1]
Indicators	Power - green when power is applied
Isolation path Flexbus to Flexbus Flexbus slave side to power supply	 Galvanic to DIN EN 60079-11 Galvanic to DIN EN 60079-11
Power consumption	18…32V dc @ 0.15 A
Power source failure Max input	 U_m = 253V ac
Power dissipation	2.1 W
Thermal dissipation	7.2 BTU/hr
IS module type	[Ex ib] IIC
Conductor wire size	4 mm^2 (12 gauge) stranded max 1.2 mm (3/64 in.) insulation max
Weight	Approx. 200 g
Environmental conditions Operational temperature Storage temperature Relative humidity Shock operating nonoperating Vibration	 -20…70 °C (-4…158° F) -40…85 °C (-40…185 °F) 5…95% noncondensing Tested 30 g peak acceleration, 11 (±1) ms pulse width Tested 30 g peak acceleration, 11 (±1) ms pulse width Tested 5 g @ 10…500 Hz per IEC 68-2-6
Output (intrinsically safe) (16 pin male flexbus connector) CENELEC	U_o ≤ 5.75V dc I_o ≤ 400 mA P_o ≤ 2.05 W L_o ≤ 100 µH C_o ≤ 39 µF
Output (intrinsically safe) (16 pin male flexbus connector) FM and cULus	V_t ≤ 5.75V dc I_t ≤ 398.25 mA C_a ≤ 39.67 µF L_a ≤ 210 µH

Attribute	Value
Agency certification	Marking and classification
FM	Nonincendive, use for Class I, Division 2 Groups A, B, C and D. Provides Intrinsically safe outputs to Class I, Division 1, Groups A, B, C and D when installed in accordance with Control Drawing No. 1797-RM001
UL, C-UL	Associated Apparatus, Class I, Division 2, Groups A, B, C, and D Hazardous Locations; Class I, Zone 2, AEx nA[ia] IIC, Ex nA[ia] IIC T4 (Ta = 70 °C) when installed in accordance with Control Drawing No. 1797-RM001
INMETRO	[BR-Ex ib] IIC
	Approval marks and certification number
EXAM (ATEX)	DMT 00 ATEX E056
UL, C-UL	File No.: E197983
FM	
INMETRO	05/UL-BRAE-0010
IECEx	IECEx BVS 09.0025
Declaration of conformity	Marking
Directive 2014/30/EU (EMC)	
Directive 2014/34/EU (ATEX)	II (2) G [Ex ib] IIC II (2) D [Ex ibD]
IECEx	[Ex ib] IIC
IEC temp code	T4

1 A total of eight I/O modules can be attached to a 1794 FLEX I/O adapter. The 1797-CEC and 1797-BIC modules are not included in this number. In intermixed systems, the number of 1797 FLEX Ex I/O modules (attached onto the 1797-BIC module) plus the number of 1794 FLEX I/O modules (connected between the adapter and the 1797-CEC module) cannot exceed eight.

Table 2 Flexbus Connector - 1797-CEC

Attribute	Value
Indicators	Not applicable
Weight	Approx. 100 g
Environmental conditions	
Operational temperature	-20…70 °C (-4…158 °F)
Storage temperature	-40…85 °C (-40…185 °F)
Relative humidity	5…95% noncondensing
Shock operating	Tested 30 g peak acceleration, 11 (±1) ms pulse width
Shock nonoperating	Tested 30 g peak acceleration, 11 (±1) ms pulse width
Vibration	Tested 5 g @ 10…500 Hz per IEC 68-2-6
Agency certification	Marking and classification
FM	Nonincendive, use for Class I, Division 2 Groups A , B, C, and D Hazardous Locations;. A temp rating of T4 applies with Ta = 70 °C.
UL, C-UL	Class I, Division 2, Groups A, B, C, and D Hazardous Locations; Class I, Zone 2, AEx nA IIC, Ex nA IIC T4 (Ta = 70 °C)
	Approval mark and certificate number
UL, C-UL	File No.: E197983
FM	
Declaration of conformity	Marking
Directive 2014/30/EU (EMC)	
Directive 2014/34/EU (ATEX)	II 3G Ex nA IIC T4 X

CENELEC Information

The isolator type 1797-BIC/* module is an associated apparatus according to EN 60079-11. If the isolator is connected to intrinsically-safe circuits the applicable national local construction, installation and operating regulations must be heeded (in Germany DIN EN 60079-11, DIN VDE 0165).

UL Information

Diagram 1

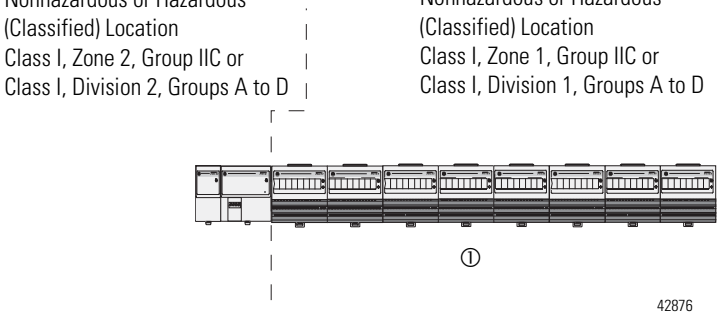

Diagram 2

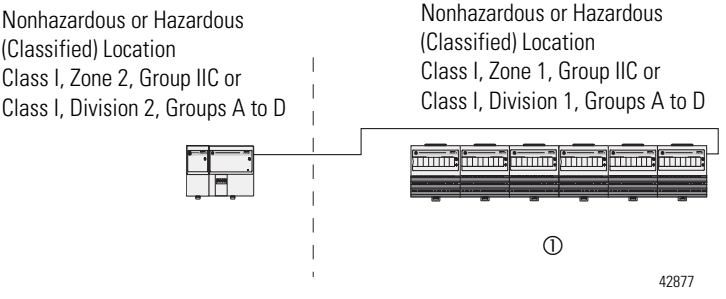

Isolator	Restriction
1797-BIC and -CEC	Max of 8 I/O modules①

① I/O module capacitance value is cumulative. Ci (total) = Ci (I/O module 1) + Ci (I/O module 2) + ...Ci (I/O module 8). Ci (total) must be less than 65 µF. The limitation of eight I/O modules per isolator is a functional limitation. Refer to table 2 of the appropriate I/O Modules sections in this document (1797-RM001).

Application

The isolator type 1797-BIC/* module functions as a galvanic isolation barrier for signals between a nonintrinsic backplane bus and an intrinsic safe backplane bus. The isolator must be installed in a safe or Zone 2 area.

Cover Plug for IS Backplane Bus

The 16-pole male connector for the FLEX Ex IS backplane bus is provided with a cover plug. The cover plug can only be removed when a 1797-TB3 terminal base, a 1794-CE1 cable or a 1794-CE3 cable is connected. The connection must not be connected to any signals that exceed the instrinsically safe values of the IS backplane.

Power Supply

The isolator is powered via a removable terminal connector with a dc-voltage between 18V and 32V. Due to a failure in the power supply a maximum voltage U_m of 253V ac is permitted.

IMPORTANT For detailed certification information, refer to the FLEX Ex System Certification Reference Manual, publication 1797-RM001.

WARNING Avoid electrostatic charging.
ADVERTÊNCIA! PREVENIR CONTRA O ACÚMULO DE CARGA ELETROSTÁTICA.

Notes:

Notes:

Rockwell Automation Support

Rockwell Automation provides technical information on the Web to assist you in using its products. At http://support.rockwellautomation.com, you can find technical manuals, a knowledge base of FAQs, technical and application notes, sample code and links to software service packs, and a MySupport feature that you can customize to make the best use of these tools.

For an additional level of technical phone support for installation, configuration, and troubleshooting, we offer TechConnect Support programs. For more information, contact your local distributor or Rockwell Automation representative, or visit http://support.rockwellautomation.com.

Installation Assistance

If you experience a problem with a hardware module within the first 24 hours of installation, please review the information that's contained in this manual. You can also contact a special Customer Support number for initial help in getting your module up and running.

United States	1.440.646.3434 Monday – Friday, 8am – 5pm EST
Outside United States	Please contact your local Rockwell Automation representative for any technical support issues.

New Product Satisfaction Return

Rockwell tests all of its products to ensure that they are fully operational when shipped from the manufacturing facility. However, if your product is not functioning, it may need to be returned.

United States	Contact your distributor. You must provide a Customer Support case number (see phone number above to obtain one) to your distributor in order to complete the return process.
Outside United States	Please contact your local Rockwell Automation representative for return procedure.

Allen-Bradley, Rockwell Automation, ControlLogix, RSLinx, TechConnect, and FLEX I/O are trademarks of Rockwell Automation, Inc.
Trademarks not belonging to Rockwell Automation are property of their respective companies.

Rockwell Automation maintains current product environmental information on its website at http://www.rockwellautomation.com/rockwellautomation/about-us/sustainability-ethics/product-environmental-compliance.page.

www.rockwellautomation.com

Power, Control and Information Solutions Headquarters

Americas: Rockwell Automation, 1201 South Second Street, Milwaukee, WI 53204-2496 USA, Tel: (1) 414.382.2000, Fax: (1) 414.382.4444
Europe/Middle East/Africa: Rockwell Automation NV, Pegasus Park, De Kleetlaan 12a, 1831 Diegem, Belgium, Tel: (32) 2 663 0600, Fax: (32) 2 663 0640
Asia Pacific: Rockwell Automation, Level 14, Core F, Cyberport 3, 100 Cyberport Road, Hong Kong, Tel: (852) 2887 4788, Fax: (852) 2508 1846

Publication 1797-IN513G-EN-P - August 2017 PN-455774

Supersedes Publication 1797-5.13 - June 2010
Copyright © 2017 Rockwell Automation, Inc. All rights reserved. Printed in the U.S.A.