Installation Instructions

Allen-Bradley

FLEX I/O Power Supply Modules

Catalog number 1794-PS13 and 1794-PS3

Table of Contents

Topic	Page
Important User Information	2
Environment and Enclosure	3
Preventing Electrostatic Discharge	3
North American Hazardous Location Approval	5
Install Your Power Supply Module	7
Connect Wiring for your Power Supply Module	8
Diagnostic Indicator	10
Specifications	11
Derating Curve for 1794-PS3 (for any mounting other than horizontal)	14
Mounting Dimensions	15

Important User Information

Solid-state equipment has operational characteristics differing from those of electromechanical equipment. Safety Guidelines for the Application, Installation, and Maintenance of Solid-State Controls (Publication SGI-1.1 available from your local Rockwell Automation Sales Office or online at http://www.rockwellautomation.com/literature/) describes some important differences between solid-state equipment and hard-wired electromechanical devices. Because of this difference, and also because of the wide variety of uses for solid-state equipment, all persons responsible for applying this equipment must satisfy themselves that each intended application of this equipment is acceptable.

In no event will Rockwell Automation, Inc. be responsible or liable for indirect or consequential damages resulting from the use or application of this equipment.

The examples and diagrams in this manual are included solely for illustrative purposes. Because of the many variables and requirements associated with any particular installation, Rockwell Automation, Inc. cannot assume responsibility or liability for actual use based on the examples and diagrams.

No patent liability is assumed by Rockwell Automation, Inc. with respect to use of information, circuits, equipment, or software described in this manual.

Reproduction of the contents of this manual, in whole or in part, without written permission of Rockwell Automation, Inc., is prohibited.

Throughout this manual, when necessary, we use notes to make you aware of safety considerations.

!	**WARNING:** Identifies information about practices or circumstances that can cause an explosion in a hazardous environment, which may lead to personal injury or death, property damage, or economic loss.
!	**ATTENTION:** Identifies information about practices or circumstances that can lead to personal injury or death, property damage, or economic loss. Attentions help you identify a hazard, avoid a hazard, and recognize the consequences.
IMPORTANT	Identifies information that is critical for successful application and understanding of the product.

Environment and Enclosure

This equipment is intended for use in a Pollution Degree 2 industrial environment, in overvoltage Category II applications (as defined in IEC 60664-1), at altitudes up to 2000 m (6562 ft) without derating.

This equipment is not intended for use in residential environments and may not provide adequate protection to radio communication services in such environments.

This equipment is supplied as open-type equipment. It must be mounted within an enclosure that is suitably designed for those specific environmental conditions that will be present and appropriately designed to prevent personal injury resulting from accessibility to live parts. The enclosure must have suitable flame-retardant properties to prevent or minimize the spread of flame, complying with a flame spread rating of 5VA or be approved for the application if nonmetallic. The interior of the enclosure must be accessible only by the use of a tool. Subsequent sections of this publication may contain additional information regarding specific enclosure type ratings that are required to comply with certain product safety certifications.

In addition to this publication, see the following:

- Industrial Automation Wiring and Grounding Guidelines, publication 1770-4.1, for additional installation requirements.
- NEMA Standard 250 and IEC 60529, as applicable, for explanations of the degrees of protection provided by enclosures.

Preventing Electrostatic Discharge

ATTENTION: This equipment is sensitive to electrostatic discharge, which can cause internal damage and affect normal operation. Follow these guidelines when you handle this equipment:

- Touch a grounded object to discharge potential static.
- Wear an approved grounding wriststrap.
- Do not touch connectors or pins on component boards.
- Do not touch circuit components inside the equipment.
- Use a static-safe workstation, if available.
- Store the equipment in appropriate static-safe packaging when not in use.

ATTENTION: This product is grounded through the DIN rail to chassis ground. Use zinc plated yellow-chromate steel DIN rail to assure proper grounding. The use of other DIN rail materials (for example, aluminum or plastic) that can corrode, oxidize, or are poor conductors, can result in improper or intermittent grounding. Secure DIN rail to mounting surface approximately every 200 mm (7.8 in.) and use end-anchors appropriately. Be sure to ground the DIN rail properly. Refer to Industrial Automation Wiring and Grounding Guidelines, Rockwell Automation publication 1770-4.1, for more information.

ATTENTION: Do not remove or replace a Terminal Base unit while power is applied. Interruption of the backplane can result in unintentional operation or machine motion.

ATTENTION:

- If this equipment is used in a manner not specified by the manufacturer, the protection provided by the equipment may be impaired.
- Read this document and the documents listed in the Additional Resources section about installation, configuration, and operation of this equipment before you install, configure, operate, or maintain this product. Users are required to familiarize themselves with installation and wiring instructions in addition to requirements of all applicable codes, laws, and standards.
- Installation, adjustments, putting into service, use, assembly, disassembly, and maintenance are required to be carried out by suitably trained personnel in accordance with applicable code of practice.
- In case of malfunction or damage, no attempts at repair should be made. The module should be returned to the manufacturer for repair. Do not dismantle the module.
- This equipment is certified for use only within the surrounding air temperature range of 0…55 °C (32…131 °F). The equipment must not be used outside of this range.
- Use only a soft dry anti-static cloth to wipe down equipment. Do not use any cleaning agents.

Electrical Safety Consideration

ATTENTION: All wiring must comply with applicable electrical installation requirements (for example, N.E.C. article 501-4(b)).

North American Hazardous Location Approval

The following modules are North American Hazardous Location approved: 1794-PS13 and 1794-PS3.

The following information applies when operating this equipment in hazardous locations:	**Informations sur l'utilisation de cet équipement en environnements dangereux:**
Products marked "CL I, DIV 2, GP A, B, C, D" are suitable for use in Class I Division 2 Groups A, B, C, D, Hazardous Locations and nonhazardous locations only. Each product is supplied with markings on the rating nameplate indicating the hazardous location temperature code. When combining products within a system, the most adverse temperature code (lowest "T" number) may be used to help determine the overall temperature code of the system. Combinations of equipment in your system are subject to investigation by the local Authority Having Jurisdiction at the time of installation.	Les produits marqués "CL I, DIV 2, GP A, B, C, D" ne conviennent qu'à une utilisation en environnements de Classe I Division 2 Groupes A, B, C, D dangereux et non dangereux. Chaque produit est livré avec des marquages sur sa plaque d'identification qui indiquent le code de température pour les environnements dangereux. Lorsque plusieurs produits sont combinés dans un système, le code de température le plus défavorable (code de température le plus faible) peut être utilisé pour déterminer le code de température global du système. Les combinaisons d'équipements dans le système sont sujettes à inspection par les autorités locales qualifiées au moment de l'installation.
EXPLOSION HAZARD • Do not disconnect equipment unless power has been removed or the area is known to be nonhazardous. • Do not disconnect connections to this equipment unless power has been removed or the area is known to be nonhazardous. Secure any external connections that mate to this equipment by using screws, sliding latches, threaded connectors, or other means provided with this product. • Substitution of components may impair suitability for Class I, Division 2. • If this product contains batteries, they must only be changed in an area known to be nonhazardous.	**RISQUE D'EXPLOSION** • Couper le courant ou s'assurer que l'environnement est classé non dangereux avant de débrancher l'équipement. • Couper le courant ou s'assurer que l'environnement est classé non dangereux avant de débrancher les connecteurs. Fixer tous les connecteurs externes reliés à cet équipement à l'aide de vis, loquets coulissants, connecteurs filetés ou autres moyens fournis avec ce produit. • La substitution de composants peut rendre cet équipement inadapté à une utilisation en environnement de Classe I, Division 2. • S'assurer que l'environnement est classé non dangereux avant de changer les piles.

WARNING:

- If you connect or disconnect wiring while the field-side power is on, an electrical arc can occur. This could cause an explosion in hazardous location installations. Be sure that power is removed or the area is nonhazardous before proceeding.
- If you insert or remove the module while backplane power is on, an electric arc can occur. This could cause an explosion in hazardous location installations. Be sure that power is removed or the area is nonhazardous before proceeding.
- The module does not support "Removal and Insertion Under Power" (RIUP) capability. Do not connect or disconnect the module while power is applied. Be sure power is removed before proceeding.
- For Class I Division 2 applications, use only Class I Division 2 listed or recognized accessories and modules approved for use within the 1794 platform.

FLEX I/O 1794-PS13 and 1794-PS3 Power Supply Modules

The 1794-PS13 power supply provides sufficient 24V DC power to operate 4 adapter modules. Do not attempt to operate an entire FLEX I/O system with the 1794-PS13 power supply.

The 1794-PS3 power supply provides sufficient 24V DC power to operate 10 adapter modules. You can use this 1794-PS3 power supply to operate an entire FLEX I/O system.

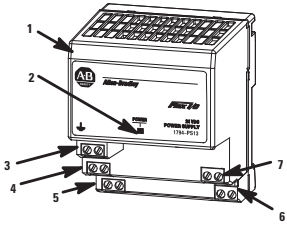

1794-PS13

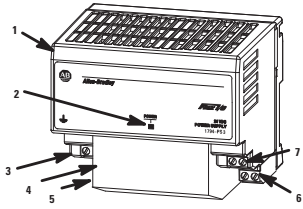

1794-PS3

Component Identification

	Description
1	Power supply module
2	Indicator
3	150/230V AC ground
4	120/230V AC common L2/N connections
5	120/230V AC power L1 connections
6	+24V DC connections
7	24V DC common connections

Install Your Power Supply Module

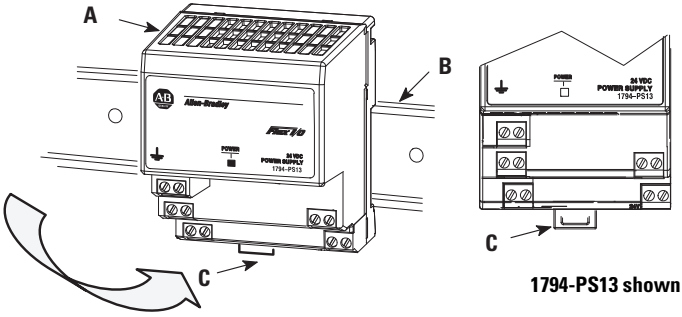

ATTENTION: During mounting of all devices, be sure that all debris (metal chips, wire strands, etc.) is kept from falling into the module. Debris that falls into the module could cause damage on power up.

1. Hook the lip on the rear of the power supply module onto the top of the DIN rail, and rotate the power supply module onto the rail.
2. Press the power supply module down onto the DIN rail until flush. Locking tab C will snap into position and lock the power supply module to the DIN rail.
3. If the power supply module does not lock in place, use a screwdriver or similar device to move the locking tab down while pressing the power supply module flush onto the DIN rail, and release the locking tab to lock the power supply module in place. If necessary, push up on the locking tab to lock.
4. Connect the power supply wiring as shown in Connect Wiring for your Power Supply Module below.

Note: For panel/Wall mounting, refer to publication 1794-TD013, Panel Mounting Kit, catalog number 1794-NM1.

Connect Wiring for your Power Supply Module

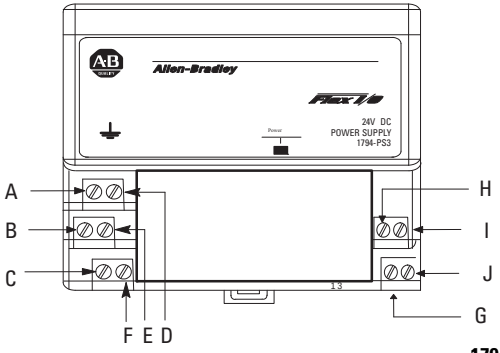

1794-PS3 shown

Terminals A, B and C are 120/230V AC supply terminals. Terminals D, E and F are available to daisychain this 120/230V AC power to other 1794-PS power supply modules. If applying 120/230V AC power to the power supply, you can also power the corresponding 120/230V AC modules in your FLEX I/O system.

IMPORTANT When wiring this power supply, torque terminal screws to 0.8 Nm (7 lbs-in.).

1. Connect the 120/230V AC power to the left side terminals on the connectors on the left side of the power supply module as follows:

Connect		To
AC ground	GND	A
120/230V AC common	L2/N	B
120/230V AC power	L1	C

2. Connect terminal G (+24V DC) to the +24V DC terminal on the first adapter.
3. Connect terminal H (+24V DC common) to the +24V DC common terminal on the first adapter.
4. Connections I and J are used to pass +24V DC power (G) and –24V common (H) to the next adapter in the series (if required).

5. Repeat steps 3 and 4 using terminals I and J for the second adapter.

ATTENTION: The total length of wire for terminals H, I, J and G must not exceed 3m (9.8ft). Exceeding the 3m (9.8ft) length can reduce noise immunity.

6. Connections D, E and F are used to pass 120/230V AC power to adjacent 1794 power supplies, or to power any corresponding120/230V AC modules in your FLEX I/O system.

ATTENTION: Input and output wiring must be in accordance with Class I, Division 2 wiring methods and in accordance with the authority having jurisdiction.

Example of Using a 1794-PS13 Power Supply to Power 4 Adapter Modules

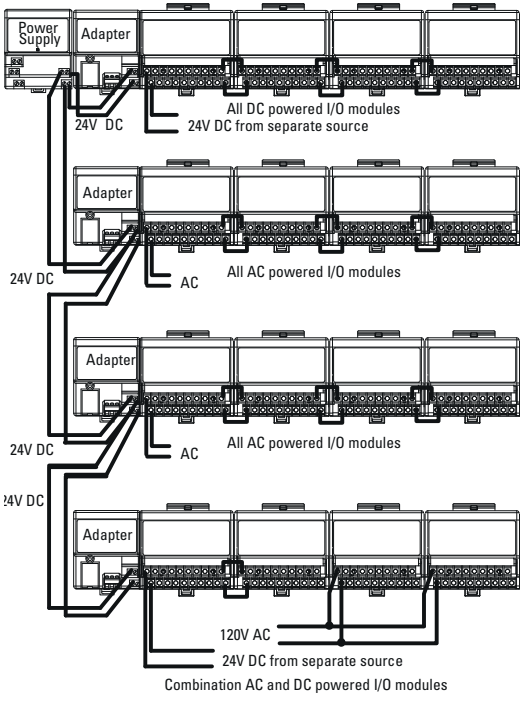

Diagnostic Indicator

The power supplies have 1 indicator.

1794-PS13

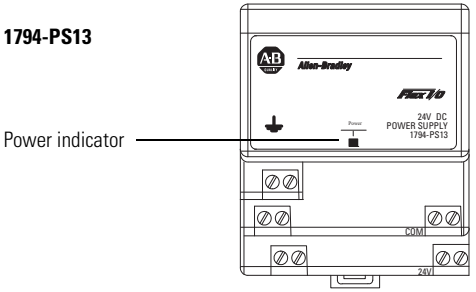

The power indicator is on (green) when voltage at the output is between 20.4V DC and 28V DC.

1794-PS3

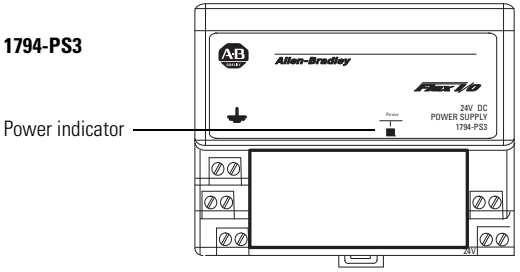

The power indicator is on (green) when voltage at the output is between 20.4V DC and 28V DC.

Diagnostic Indicator

Indicator	Description
ON (green)	Output voltage is greater than 20.4V DC, but less than 28V DC
OFF	No power applied to the power supply
	Output voltage exceeded 35V DC, and overvoltage protection shut the unit down
	Output current is above 1.4A (1794-PS13) or above 3.2A (1794-PS3)

Specifications

General – 1794-PS13 and 1794-PS3

Attribute	1794-PS13	1794-PS3
Dimensions, approx. H x W x D	87 x 69 x 69 mm 3.4 x 2.7 x 2.7 inches	87 x 94 x 69 mm 3.4 x 3.7 x 2.7 inches
Enclosure type rating	None (open-style)	
Wire Size	0.34…2.5 mm^2 (22...12 AWG) solid or stranded copper wire rated at 75 °C (167 °F), or greater, 1.2 mm (3/64 in.) insulation max	
Wiring category[1]	2 – on power ports	
North American temp code	T3	
Terminal screw torque	0.8 Nm (7 lbs-in.)	

(1) Use this conductor category information for planning conductor routing as described in Industrial Automation Wiring and Grounding Guidelines, publication 1770-4.1.

Input – 1794-PS13 and 1794-PS3

Attribute	1794-PS13	1794-PS3
Nominal supply voltage	120V AC, 50/60 Hz; 0.6 A max. 230V AC, 50/60 Hz; 0.42 A max.	120V AC, 50/60 Hz; 1.7 A max. 230V AC, 50/60 Hz; 1.1 A max.
Voltage range	85…265V AC	
Frequency range	47…63 Hz	
Input current, max.	0.7 A	1.9 A
Inrush current	40 A typical, 1 AC cycle @ V_{in} 265V AC, 55 °C	
Interruption	Output will stay within specification when input drops out for 1/2 cycle @ 47 Hz, 85V AC with max. load	

Output – 1794-PS13 and 1794-PS3

Attribute	1794-PS13	1794-PS3
Nominal output	+24V DC	
Voltage range	20.4…27.6V DC (includes noise and 5% AC ripple)	
Output current, max.	1.3 A	3 A (horizontal mounting) 2.8 A all other mountings (see Derating Curve)
Output power	31.2 W	72 W
Output ripple, max.	1200 mV peak-to-peak	

Output – 1794-PS13 and 1794-PS3

Attribute	1794-PS13	1794-PS3
Minimum load	0 mA	50 mA
Output surge	Sufficient to drive 4 adapters	Sufficient to drive 10 adapters
Overvoltage protection	Output internally limited to 35V DC. Cycle power to re-energize.	
Leakage Current, max.	0.5 mA rms @ rated input and output	
Isolation voltage	Tested at 2500V DC for 1 s	
Overcurrrent protection, min	1.4 A	3.2 A
Thermal dissipation	23.9 BTU/hr	41.0 BTU/hr
Power dissipation, max	7 W	12 W

Environmental Specifications

Attribute	Value
Temperature, operating	IEC 60068-2-1 (Test Ad, Operating Cold), IEC 60068-2-2 (Test Bd, Operating Dry Heat), IEC 60068-2-14 (Test Nb, Operating Thermal Shock): 0 °C < Ta < +55 °C (+32 °F < Ta < +131 °F)
Temperature, surrounding air, max.	55 °C (131 °F)
Temperature, nonoperating	IEC 60068-2-1 (Test Ab, Unpackaged Nonoperating Cold), IEC 60068-2-2 (Test Bb, Unpackaged Nonoperating Dry Heat), IEC 60068-2-14 (Test Na, Unpackaged Nonoperating Thermal Shock): -40…+85 °C (-40…+185 °F)
Relative humidity	IEC 60068-2-30 (Test Db, Unpackaged Damp Heat): 5…95% non-condensing
Vibration	IEC60068-2-6 (Test Fc, Operating): 5g @ 10…500 Hz
Shock, operating	IEC60068-2-27 (Test Ea, Unpackaged shock): 30 g
Shock, nonoperating	IEC60068-2-27 (Test Ea, Unpackaged shock) 50 g
Emissions	IEC 61000-6-4
ESD immunity	IEC 61000-4-2: 6 kV contact discharges 8 kV air discharges

Environmental Specifications

Attribute	Value
Radiated RF immunity	IEC 61000-4-3: 10V/m with 1 kHz sine-wave 80% AM from 80…2700 MHz 10V/m with 200 Hz 50% Pulse 100% AM at 900 MHz 10V/m with 200 Hz 50% Pulse 100% AM at 1890 MHz
EFT/B immunity	IEC 61000-4-4: ± 2kV at 5 kHz on power ports
Surge transient immunity	IEC 61000-4-5: ± 1kV line-line(DM) and ± 2kV line-earth(CM) on power ports
Conducted RF immunity	IEC 61000-4-6: 10V rms with 1 kHz sine-wave 80% AM from 150 kHz…80 MHz
Voltage variation	IEC 61000-4-11: 30% dips for 1 period at 0 ° and 180 ° on AC supply ports 60% dips for 5 and 50 periods on AC supply ports ±10% fluctuations or 15 min on AC supply ports > 95% interruptions for 250 periods on AC supply ports

Certifications

Certifications (when product is marked)[1]	Value
c-UL-us	UL Listed for Class I, Division 2 Group A,B,C,D Hazardous Locations, certified for U.S. and Canada. See UL File E334470. UL Listed Industrial Control Equipment, certified for US and Canada. See UL File E322657.
CE	European Union 2014/30/EU EMC Directive, compliant with: EN 61326-1; Meas./Control/Lab., Industrial Requirements EN 61000-6-2; Industrial Immunity EN 61000-6-4; Industrial Emissions EN 61131-2; Programmable Controllers (Clause 8, Zone A & B) European Union 2014/35/EU LVD, compliant with: EN 61010-2-201; Control Equipment Safety Requirements
RCM	Australian Radiocommunications Act, compliant with: EN 61000-6-4; Industrial Emissions
KC	Korean Registration of Broadcasting and Communications Equipment, compliant with: Article 58-2 of Radio Waves Act, Clause 3 (1794-PS3 only)
EAC	Russian Customs Union TR CU 020/2011 EMC Technical Regulation Russian Customs Union TR CU 004/2011 LV Technical Regulation

(1) See the Product Certification link at http://www.rockwellautomation.com/products/certification for Declarations of Conformity, Certificates, and other certification details.

At the end of its life, this equipment should be collected separately from any unsorted municipal waste.

Derating Curve for 1794-PS3 (for any mounting other than horizontal)

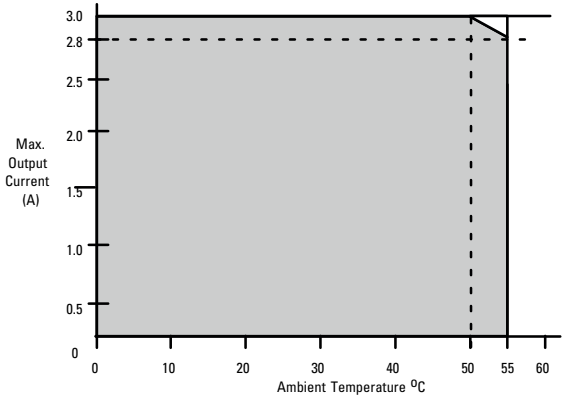

The area within the curve represents the safe operating range for the module under various conditions of user supplied 24V DC supply voltages and ambient temperatures.

= Normal mounting safe operating range, (includes).

= Other mounting positions (including inverted horizontal) safe operating range

Normal Mounting – Horizontal

Other Mounting (including Vertical, and Inverted Horizontal Mounting)

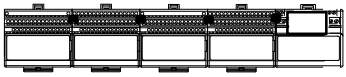

Mounting Dimensions

PS13

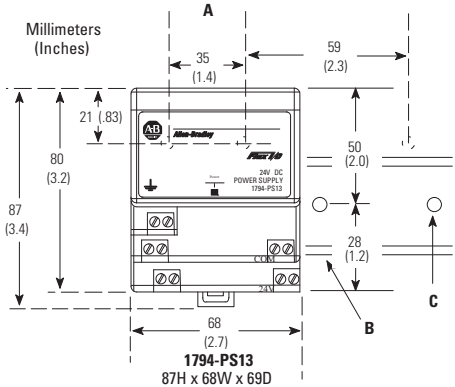

1794-PS13
87H x 68W x 69D
(3.4H x 2.7W x 2.7D)

A = Mounting hole dimensions for optional mounting kit
B = DIN rail
C = Secure DIN rail approximately every 200 mm

PS3

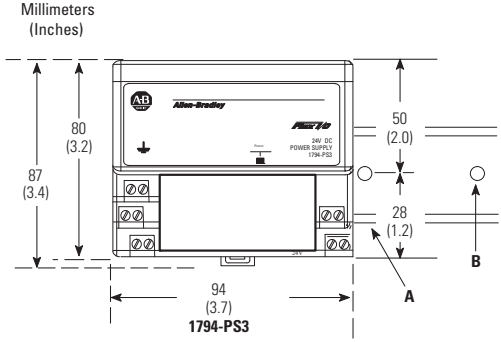

1794-PS3

87H x 95W x 69D
(3.4H x 3.7W x 2.7D)

A = DIN rail
B = Secure DIN rail approximately every 200 mm

Rockwell Automation Support

Rockwell Automation provides technical information on the Web to assist you in using its products. At http://www.rockwellautomation.com/support/, you can find technical manuals, a knowledge base of FAQs, technical and application notes, sample code and links to software service packs, and a MySupport feature that you can customize to make the best use of these tools.

For an additional level of technical phone support for installation, configuration and troubleshooting, we offer TechConnect support programs. For more information, contact your local distributor or Rockwell Automation representative, or visit http://www.rockwellautomation.com/support/.

Installation Assistance

If you experience a problem within the first 24 hours of installation, please review the information that's contained in this manual. You can also contact a special Customer Support number for initial help in getting your product up and running.

United States or Canada	1.440.646.3434
Outside United States or Canada	Use the Worldwide Locator at http://www.rockwellautomation.com/support/americas/phone_en.html, or contact your local Rockwell Automation representative.

New Product Satisfaction Return

Rockwell Automation tests all of its products to ensure that they are fully operational when shipped from the manufacturing facility. However, if your product is not functioning and needs to be returned, follow these procedures.

United States	Contact your distributor. You must provide a Customer Support case number (call the phone number above to obtain one) to your distributor to complete the return process.
Outside United States	Please contact your local Rockwell Automation representative for the return procedure.

Documentation Feedback

Your comments will help us serve your documentation needs better. If you have any suggestions on how to improve this document, complete this form, publication RA-DU002, available at http://www.rockwellautomation.com/literature/.

Rockwell Automation maintains current product environmental information on its website at http://www.rockwellautomation.com/rockwellautomation/about-us/sustainability-ethics/product-environmental-compliance.page.

Allen-Bradley, Rockwell Automation, FLEX I/O, Rockwell Software, and TechConnect are trademarks of Rockwell Automation, Inc. Trademarks not belonging to Rockwell Automation are property of their respective companies.

Rockwell Otomasyon Ticaret A.Ş., Kar Plaza İş Merkezi E Blok Kat:6 34752 İçerenköy, İstanbul, Tel: +90 (216) 5698400

www.rockwellautomation.com

Power, Control and Information Solutions Headquarters

Americas: Rockwell Automation, 1201 South Second Street, Milwaukee, WI 53204-2496 USA, Tel: (1) 414.382.2000, Fax: (1) 414.382.4444
Europe/Middle East/Africa: Rockwell Automation NV, Pegasus Park, De Kleetlaan 12a, 1831 Diegem, Belgium, Tel: (32) 2 663 0600, Fax: (32) 2 663 0640
Asia Pacific: Rockwell Automation, Level 14, Core F, Cyberport 3, 100 Cyberport Road, Hong Kong, Tel: (852) 2887 4788, Fax: (852) 2508 1846

Publication 1794-IN069E-EN-P - September 2018

Supersedes Publication 1794-IN069D-EN-P - June 2015

Copyright © 2018 Rockwell Automation, Inc. All rights reserved.