Technical Data

Original Instructions

IEC Busbar Mounting System Specifications

Bulletins 141A, 141C

Topic	Page
Summary of Changes	2
Product Overview	2
141C Crossboard® Mounting System	3
Catalog Number Explanation	3
Product Selection	4
Accessories	6
Specifications	7
Approximate Dimensions	9
141A Classic Mounting System	17
Catalog Number Explanation	17
Product Selection	19
Specifications	32
Approximate Dimensions	38
Additional Resources	55

Summary of Changes

This publication contains the following new or updated information. This list includes substantive updates only and is not intended to reflect all changes.

Topic	Page
Corrected accessory photos	5, 6, 28

Product Overview

		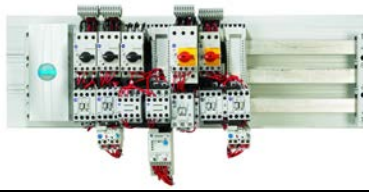
Bulletin No.	**141C Crossboard© Mounting System**	**141A MCS Mounting System**
Current Rating, Max.	UL: 100 A IEC: 125 A	UL: 1400 A IEC: 1175 A
Degree of Protection (Ingress Rating)	IP20	IP20B (finger safe)
Standards Compliance	• IEC/EN 61439-1:2011 • UL 508 • CSA C22.2, No 14 • EN 60947-1 + A1:2007 • EN 60947-1 + A2:2011 • EN 60947-3 + A1:2008 • EN 60947-3 + A2:2012	• IEC/EN 61439-1 • UL 508(1) • CSA C22.2, No 14
Certifications	CE cULus Listed	CE cULus Recognized
Features	• Reduced power wiring • Efficient design with decreased panel space • Adapters to support a wide range of devices • Plug-and-play design	• Reduced power wiring • Efficient design with decreased panel space • Factory-assembled starters • Adapters to support a wide range of devices • Plug-and-play design
Product Selection	page 3	page 17

(1) Most components comply with UL 508; there some exceptions. Consult your local Rockwell Automation sales office or Allen-Bradley distributor.

Catalog Number Explanation

Examples that are given in this section are not intended to be used for product selection. Not all combinations produce a valid catalog number.

Busbar Bases

141C	-	B	225
a		b	c

a	
Bulletin Number	
Code	**Description**
141C	Crossboard Mounting System

b	
Type	
Code	**Description**
B	Busbar system base, 3-pole

c	
Length	
Code	**Description**
225	225 mm (8.86 in.)
405	405 mm (15.94 in.)

Busbar Adapters

141C	-	18	S	16	L1
a		b	c	d	e

a	
Bulletin Number	
Code	**Description**
141C	Crossboard Mounting System

b	
No. of Poles/Width	
Code	**Description**
18	1 pole, 18 mm (0.71 in.)
45	3 poles, 45 mm (1.77 in.)

c	
Mounting Rail	
Code	**Description**
S	Fixed
R	Adjustable

d	
Current Rating	
Code	**Description**
Blank	0 A (no electrical connection)
16	16 A
25	25 A
32	32 A
45	45 A
63	63 A

e	
Terminal Connection	
Code	**Description**
Blank	No electrical connection
L1	L1
L2	L2
L3	L3

Connection Modules

141C	-	VN	16
a		b	c

a	
Bulletin Number	
Code	**Description**
141C	Crossboard Mounting System

b	
Type	
Code	**Description**
VN	Connection module, 3-pole

c	
Wire Size	
Code	**Description**
16	16 mm^2, #14...6 AWG
50	50 mm^2, #10...1 AWG

Busbar Adapters for Bulletin 140G Molded Case Circuit Breakers, 140MG Motor Protection Circuit Breakers, and 140MG Motor Circuit Protectors

141C	-	G	G	U
a		b	c	d

a	
Bulletin Number	
Code	Description
141C	Crossboard Mounting System

b	
Type	
Code	Description
G	Busbar adapters for Bulletin 140G and MG devices

c	
Frame Size	
Code	Description
G	G-Frame
H	H-Frame

d	
Terminals	
Code	Description
U	Universal Connection

Product Selection

Busbar System Bases

	Description	Rated Thermal Current [A]		Width [mm (in.)]	Pkg. Qty.	Cat. No.
		IEC	UL			
	Busbar system base • 3 poles	125	100	225 (8.86)	1	141C-B225
		125	100	405 (15.94)	1	141C-B405

Connection Modules

	Description	Rated Thermal Current [A]		Width [mm (in.)]	Pkg. Qty.	Cat. No.
		IEC	UL			
	Connection module • 3-pole • Spring terminals • 16 mm^2, #14...6 AWG wire size	63	48	22.5 (0.89)	1	141C-VN16
	Connection module • 3-pole • Box terminals • 50 mm^2, #10...1 AWG wire size	125	100	45 (1.77)	1	141C-VN50

Adapters, 3 Poles

	Description	Rated Thermal Current [A]		Width [mm (in.)]	Pkg. Qty.	Cat. No.
		IEC	UL			
	3-Pole Adapter • without electrical connection • 1 adjustable mounting rail	–	–	45 (1.77)	1	141C-45R
	3-Pole Adapter • 1 adjustable mounting rail	16	12	45 (1.77)	1	141C-45R16
		25	25		1	141C-45R25
		32	30		1	141C-45R32
		45	45		1	141C-45R45

Adapters, 1 Pole

	Description	Connection	Rated Thermal Current [A]		Width [mm (in.)]	Pkg. Qty.	Cat. No.
			IEC	UL			
	1-Pole Adapter • without electrical connection • 1 adjustable mounting rail		–	–	18 (0.71)	6	141C-18S
	1-Pole Adapter • #14 AWG wires • 1 fixed mounting rail • White indicator shows which pole is active	• L1 • Top busbar	16	16	18 (0.71)	6	141C-18S16L1
		• L2 • Middle busbar	16	16	18 (0.71)	6	141C-18S16L2
		• L3 • Bottom busbar	16	16	18 (0.71)	6	141C-18S16L3
	1-Pole Adapter • #8 AWG wires • 1 fixed mounting rail • White indicator shows which pole is active	• L1 • Top busbar	63	63	18 (0.71)	6	141C-18S63L1
		• L2 • Middle busbar	63	63	18 (0.71)	6	141C-18S63L2
		• L3 • Bottom busbar	63	63	18 (0.71)	6	141C-18S63L3

Accessories

	Description	Rated Thermal Current [A]		Width [mm (in.)]	Pkg. Qty.	Cat. No.
		IEC	UL			
	Adapter Extension Module • For 45 mm adapters	–	–	45 (1.77)	8	141C-X40
	Fuse Holder • For 10 x 38 and Class CC fuses • 3-pole • 1 fixed mounting rail	16	12.5	22.5 (0.89)	1	141C-23S16F
	Breaker Adapter • For 140G-G Molded Case Circuit Breaker (MCCB) • Universal Terminals for Top or Bottom Mount	160	100	90 (3.54)	1	141C-GGU
	Breaker Adapter • For 140G-H MCCB • Universal Terminals for Top or Bottom Mount	160	100	90 (3.54)	1	141C-GHU
	Fused Switch Disconnector	125		49.5 (1.95)	1	141C-NFD125

Specifications

Table 1 - Short-circuit Current Rating (SCCR)

Cat. No.	Description	Rating	SCCR [kA]	Protection		
				Voltage	Current	Type
141C-B225	Busbar base, 225 mm (8.86 in.)	600V/100 A	10 kA	600V	–	None (3-cycle)
			100 kA	480V	125 A	Circuit breaker (DIVQ)
			65 kA	600V	125 A	Circuit breaker (DIVQ)
			100 kA	600V	175 A	Fuse (Class J)
141C-B405	Busbar base, 405 mm (15.94 in.)	600V/100 A	10 kA	600V	–	None (3-cycle)
			100 kA	480V	125 A	Circuit breaker (DIVQ)
			65 kA	600V	125 A	Circuit breaker (DIVQ)
			100 kA	600V	175 A	Fuse (Class J)
141C-VN16	Connection module, 22.5 mm (0.89 in.)	600V/48 A	6 kA	600V	–	None (3-cycle)
			50 kA	600V	50 A	Fuse (Class J)
141C-VN50	Connection module, 45 mm (1.77 in.)	600V/100 A	10 kA	600V	–	None (3-cycle)
			100 kA	480V	125 A	Circuit breaker (DIVQ)
			65 kA	600V	125 A	Circuit breaker (DIVQ)
			100 kA	600V	175 A	Fuse (Class J)
141C-18S16L1 141C-18S16L2 141C-18S16L3	Busbar adapter, 1-pole, 18 mm (0.71 in.)	600V/16 A	6 kA	600V	–	None (3-cycle)
			50 kA	600V	20 A	Fuse (Class CC)
			14 kA	480/277V	20 A	Circuit breaker (DIVQ)
			65 kA	480/277V	16 A	NKJH type E
141C-18S63L1 141C-18S63L2 141C-18S63L3	Busbar adapter, 1-pole, 18 mm (0.71 in.)	600V/63 A	6 kA	600V	–	None (3-cycle)
			10 kA	480/277V	30 A	Circuit breaker (DIVQ)
			65 kA	480/277V	65 A	NKJH type E
141C-45R16	Busbar adapter, 3-pole, 45 mm (1.77 in.)	600V/12 A	5 kA	600V	–	None (3-cycle)
			50 kA	600V	20 A	Fuse (Class CC)
			65 kA	480V	12 A	NKJH type E
141C-45R25	Busbar adapter, 3-pole, 45 mm (1.77 in.)	600V/25 A	5 kA	600V	–	None (3-cycle)
			65 kA	480V	32 A	NKJH type E
141C-45R32	Busbar adapter, 3-pole, 45 mm (1.77 in.)	600V/30 A	5 kA	600V	–	None (3-cycle)
			65 kA	480V	32 A	NKJH type E
141C-45R45	Busbar adapter, 3-pole, 45 mm (1.77 in.)	600V/45 A	6 kA	600V	–	None (3-cycle)
			65 kA	480V	55 A	NKJH type E
141C-GGU 141C-GHU	Busbar adapter, 3-pole, 90 mm (3.54 in.)	600V/125 A	10 kA	600V	–	None (3-cycle)
			100 kA	480V	125 A	Circuit breaker (DIVQ)
			42 kA	600V	125 A	Circuit breaker (DIVQ)

General Data

Table 2 - Main Circuits

Attribute			Value
Rated insulation voltage U_i	IEC, EN	[V]	690
	UL, CSA	[V]	600
Rated impulse withstand voltage U_{imp}		[kV]	6
Rated frequency		[Hz]	50...60
Pollution degree			2
Protection class	Adapters and busbars		IP00
	Adapters and busbars mounted on plate, connected conductors, and usage of busbar covers		IP20
Standards Compliance			• IEC/EN 61439-1:2011 • UL 508 • CSA C22.2, No 14 • EN 60947-1 + A1:2007 • EN 60947-1 + A2:2011 • EN 60947-3 + A1:2008 • EN 60947-3 + A2:2012
Certifications			CE, cULus Listed

Table 3 - Adapter Data

		3-Pole Adapters				1-Pole Adapters	
		141C-45R16	141C-45R25	141C-45R32	141C-45R45	141C-18S16...	141C-18S63...
Rated current at 60 °C I_{th}(1)	[A]	16	25	32	45	16	63
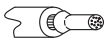 Flexible with ferrule	[mm²]	2.5	4	6	10	2.5	10
	[AWG]	14	12	10	8	14	8
Insulation rating of conductors		105 °C (221 °F)				105 °C (221 °F)	

(1) The admissible load of a complete system depends on the system topography and the application parameters. Factors of influence are ambient temperature, air circulation, busbar load, distribution of busbar load, mix of adapters and switchgear components.

Table 4 - Weights

Cat. No.	Weight [g]
141C-VN16	182
141C-VN20	272
141C-B225	765
141C-B405	1326
141C-18S16L1	51
141C-18S16L2	51
141C-18S16L3	51
141C-18S63L1	72
141C-18S63L2	72
141C-18S63L3	72

Cat. No.	Weight [g]
141C-18S	44
141C-45R	89
141C-45R16	109
141C-45R25	117
141C-45R32	124
141C-GGU	519
141C-GHU	519
141C-45R45	150
141C-X40	18
141C-NFD125	422
141C-23S16F	92

Approximate Dimensions

Dimensions are in millimeters (inches.) and are not intended to be used for manufacturing purposes.

Figure 1 - Cat. No. 141C-B225 Busbar System Base

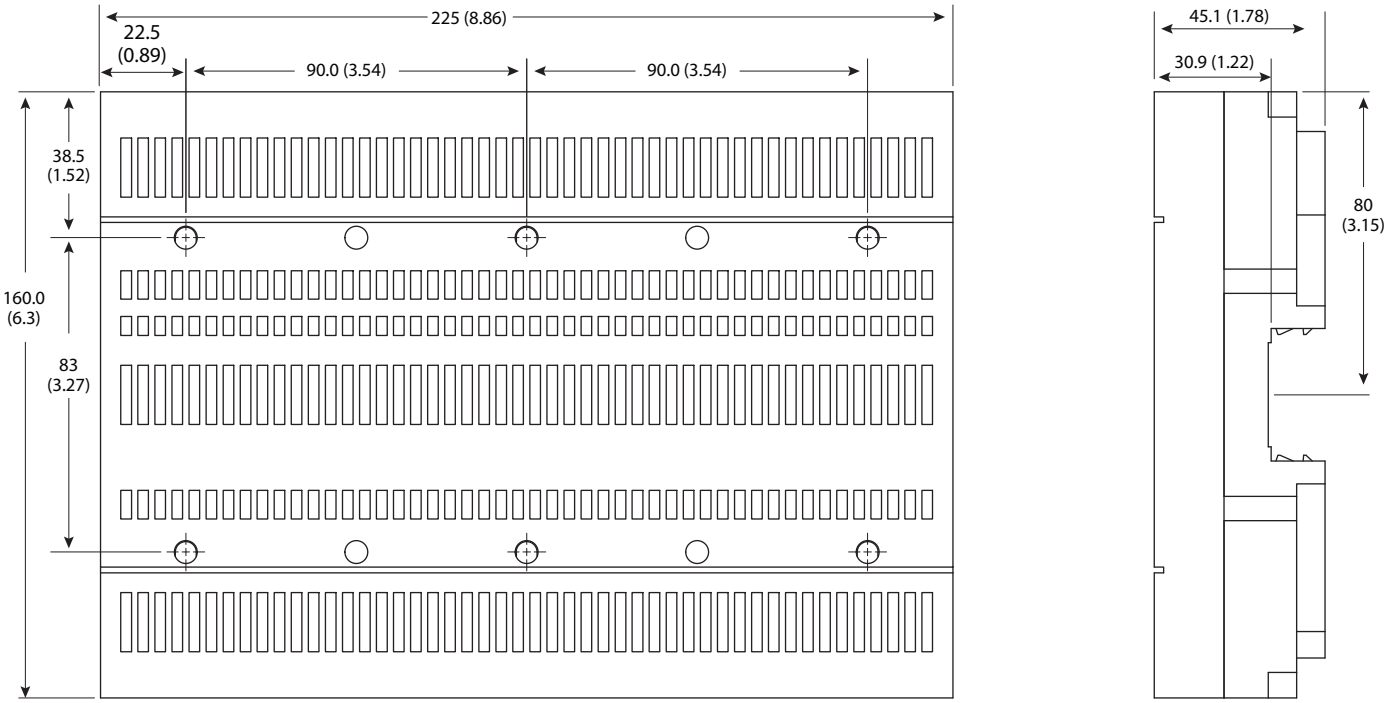

Figure 2 - Cat. No. 141C-B405 Busbar System Base

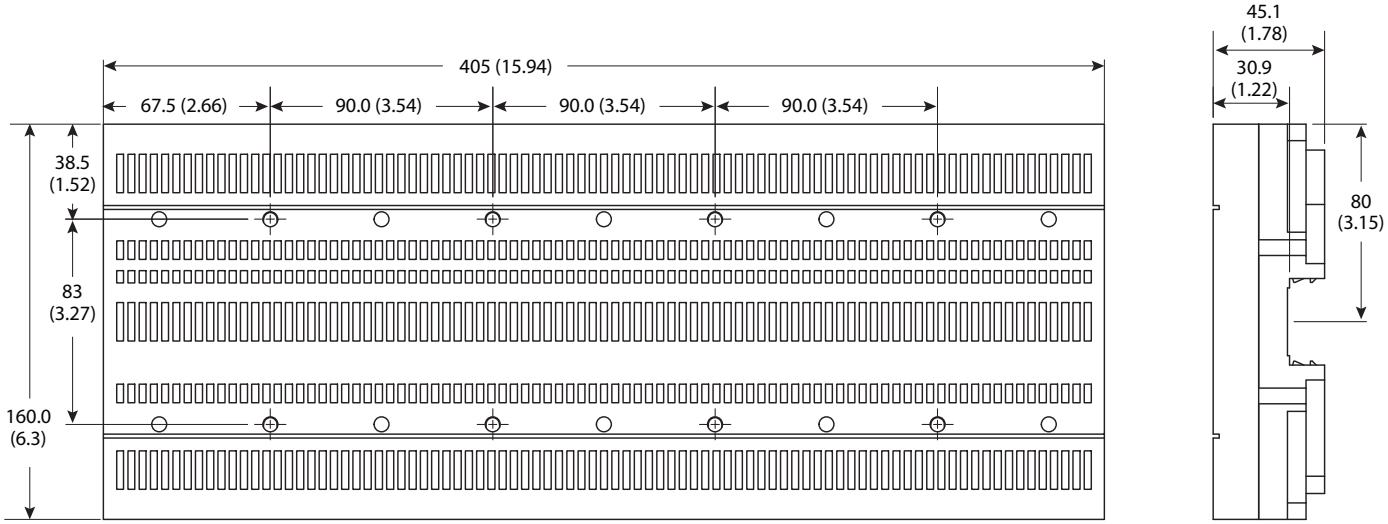

Figure 3 - Cat. No. 141C-VN16 Connection Module with Spring Terminals

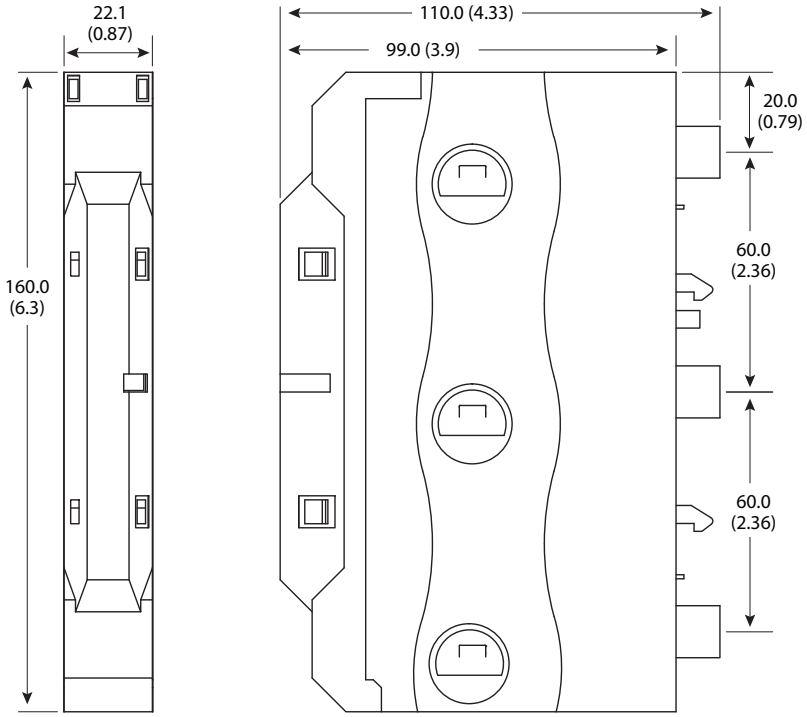

Figure 4 - Cat. No. 141C-VN50 Connection Module with Box Terminals

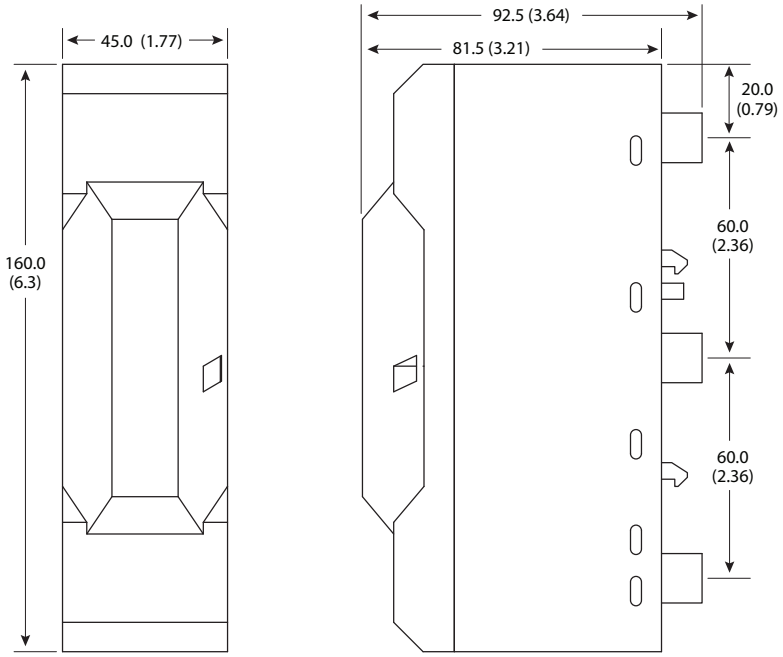

Figure 5 - Cat. No. 141C-45R 3-Pole Adapter

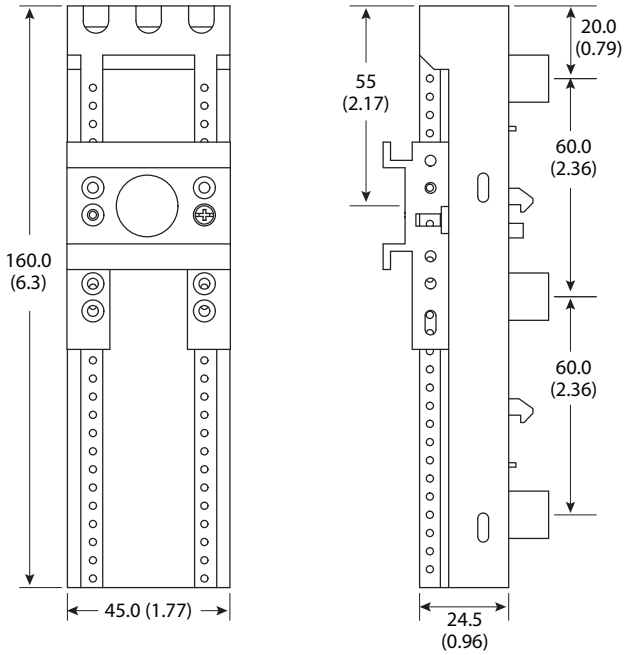

Figure 7 - Cat. No. 141C-R25, -R32, and -R45 3-Pole Adapters

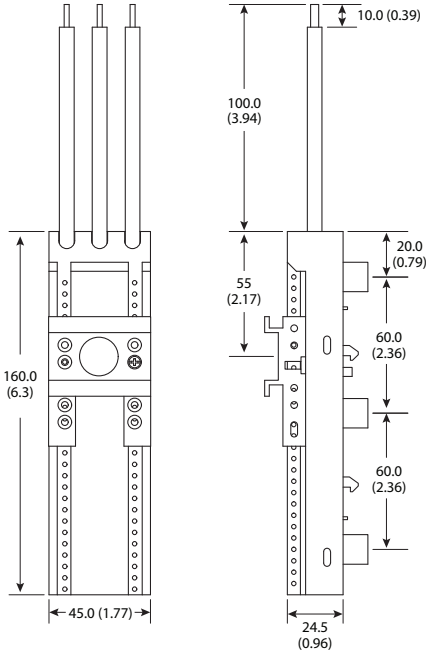

Figure 6 - Cat. No. 141C-45R16 3-Pole Adapter

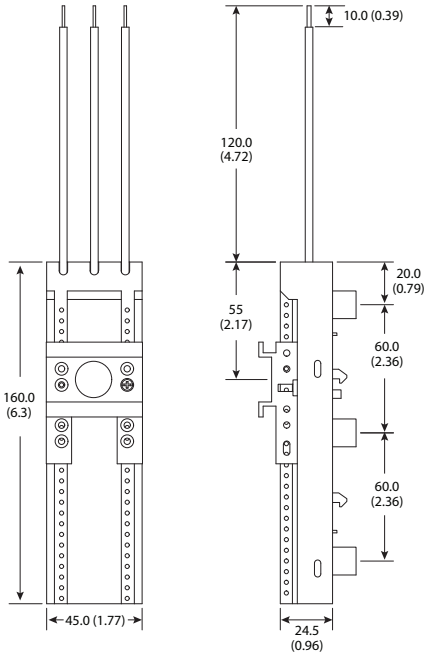

Figure 8 - Cat. No. 141C-X40 Adapter Extension Module

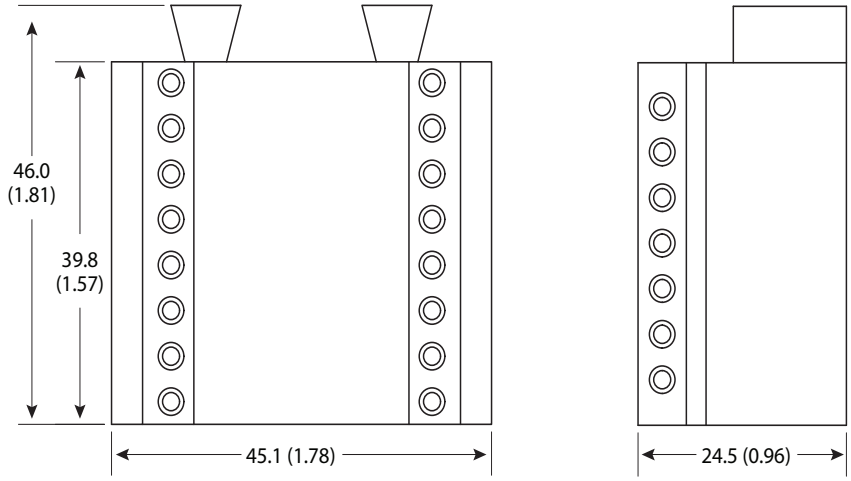

Figure 9 - Cat. No. 141C-23S16F Fuse Holder

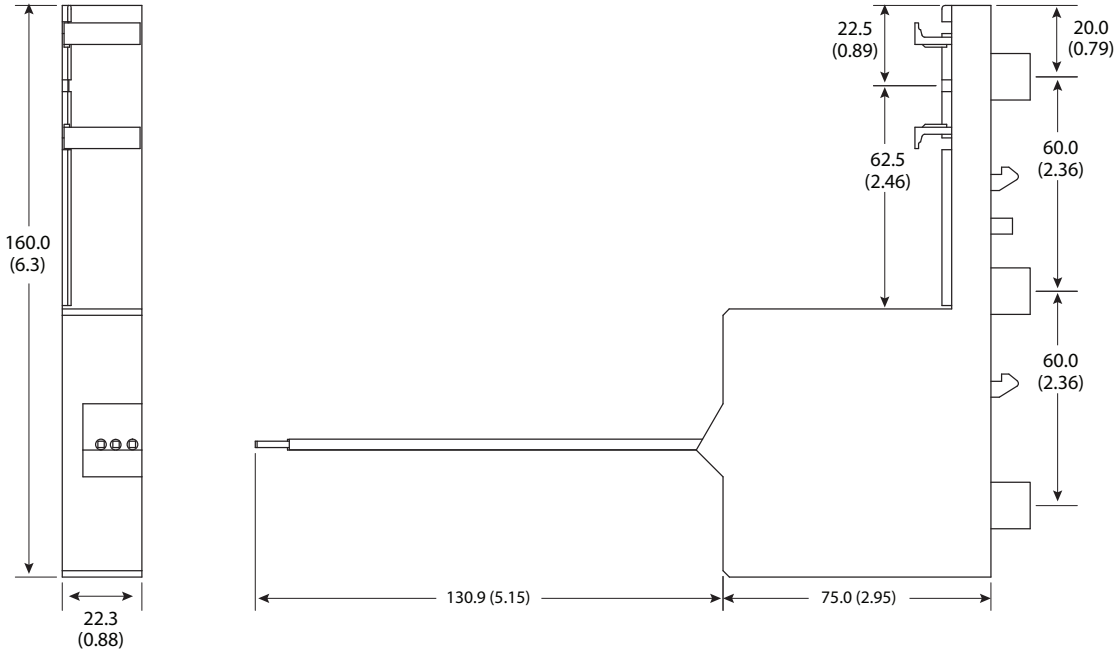

Figure 10 - Cat. No. 141C-GGU Breaker Adapter

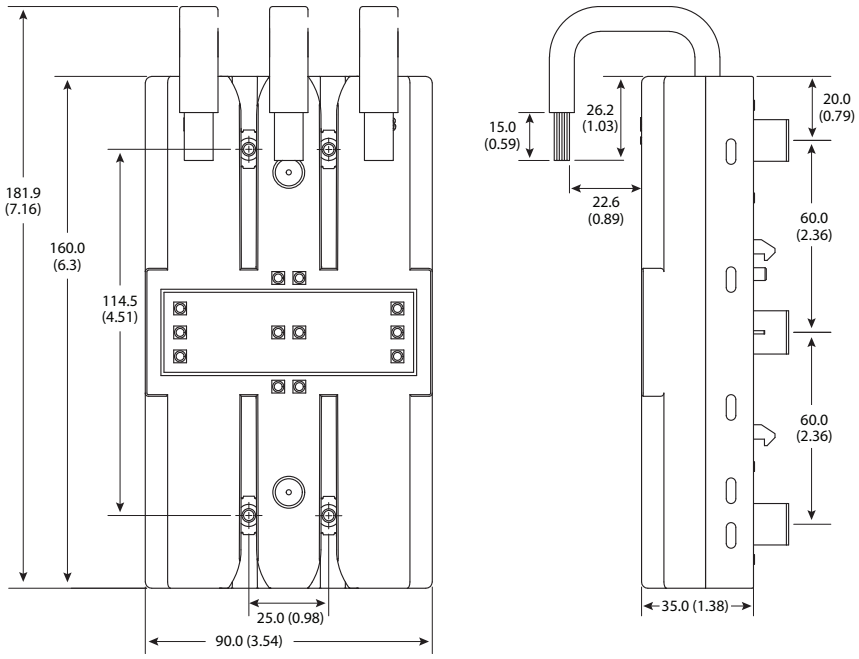

Figure 11 - Cat. No. 141C-GHU Breaker Adapter

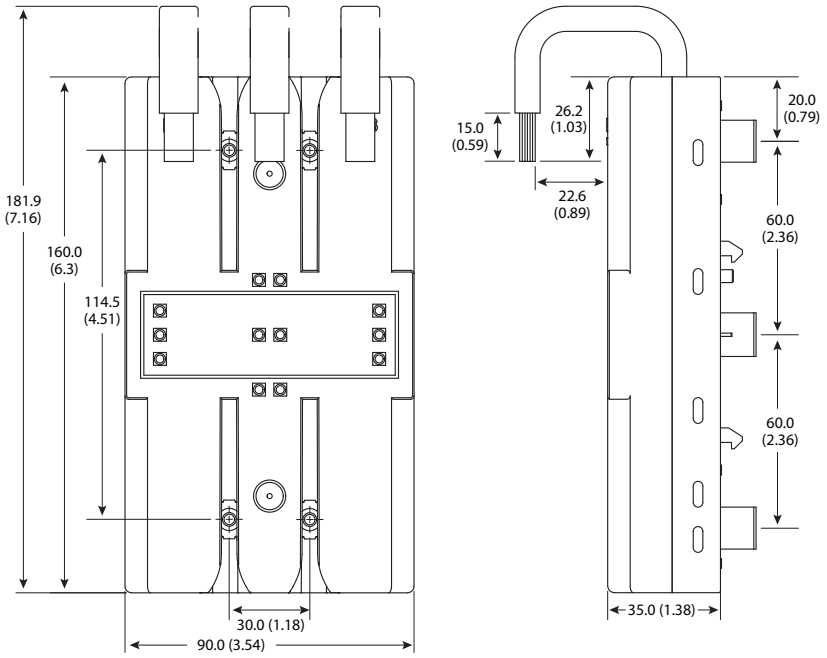

Figure 12 - Cat. No. 141C-18S 1-Pole Adapter

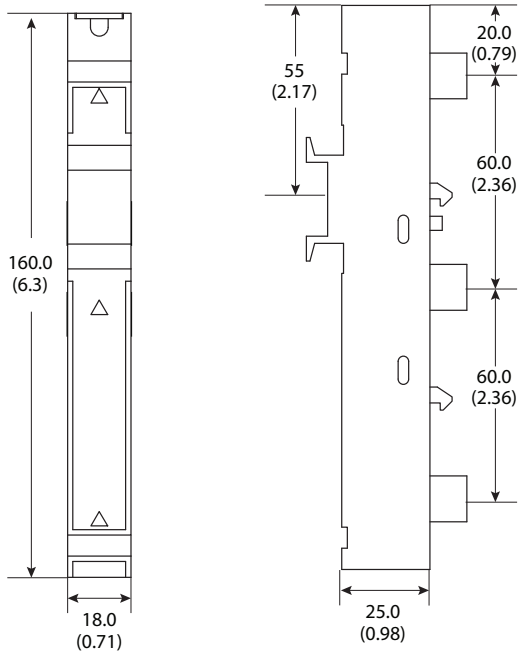

Figure 13 - Cat. No. 141C-181S6L1 1-Pole Adapter

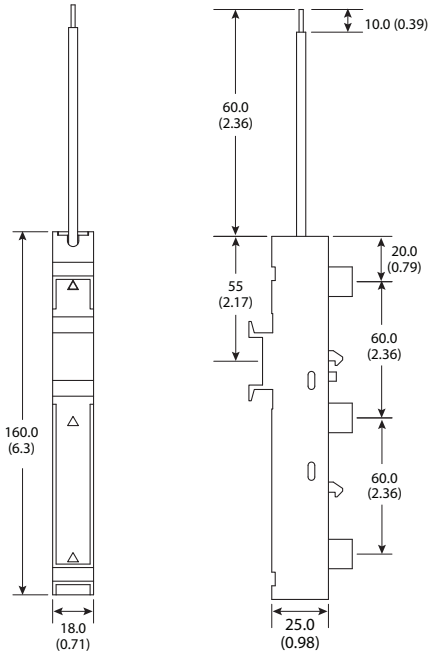

Figure 14 - Cat. No. 141C-18S16L2 1-Pole Adapter

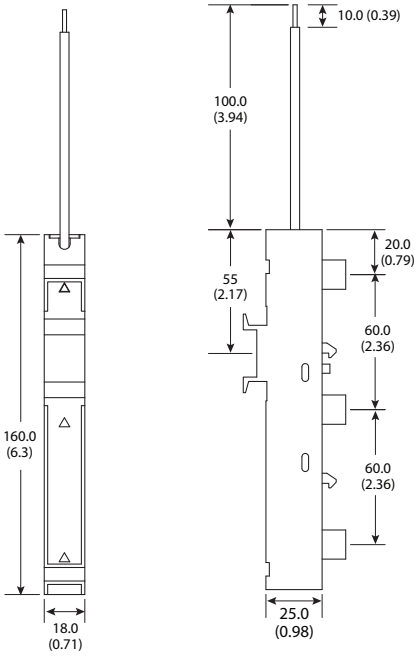

Figure 15 - Cat. No. 141C-18S16L3 1-Pole Adapter

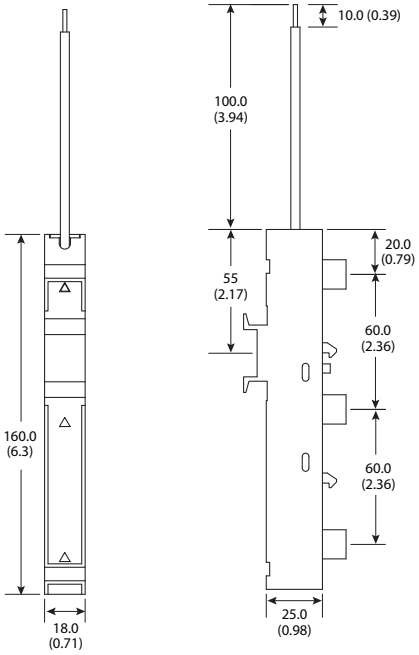

Figure 16 - Cat. No. 141C-18S63L1, -L2, and -L3 1-Pole Adapters

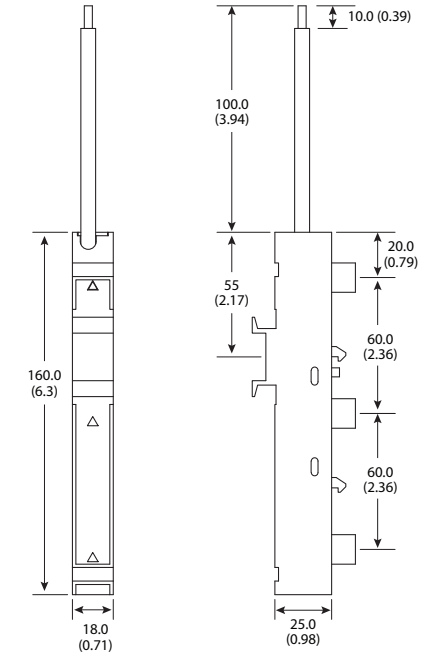

Figure 17 - Cat. No. NFD125 Fuse Switch Disconnector

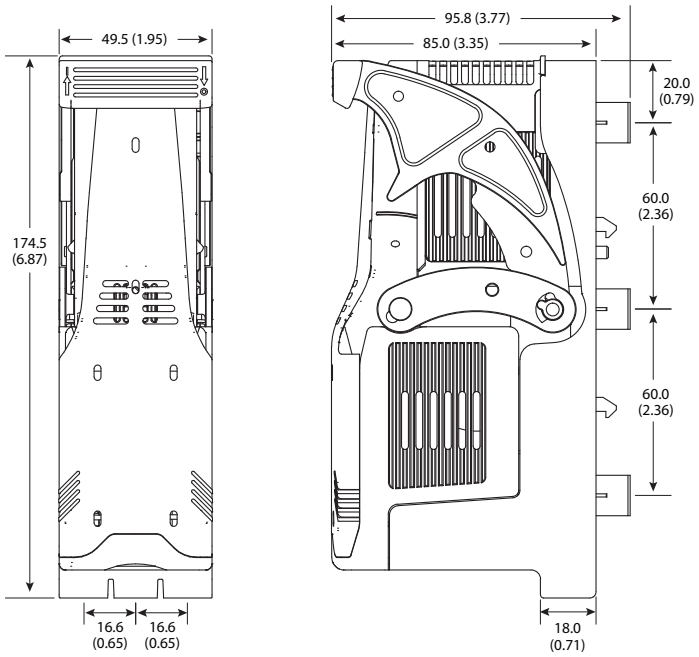

Notes:

Catalog Number Explanation

Examples that are given in this section are not intended to be used for product selection. Not all combinations produce a valid catalog number.

Busbar Adapters

141A	-	C	S	45	R	R	16
a		b	c	d	e	f	g

a	
Bulletin Number	
Code	**Description**
141A	Classic Mounting System

b	
Type	
Code	**Description**
G	Standard busbar adapter
F	Standard busbar adapter with terminals
C	Compact busbar adapter

c	
Length	
Code	**Description**
S	Short: 200 mm (7.87 in.)
M	Medium: 260 mm (10.2 in.)
L	Long: 320 mm (12.6 in.)

d	
Width	
Code	**Description**
45	45 mm (1.77 in.)
54	54 mm (2.13 in.)
63	63 mm (2.48 in.)
72	72 mm (2.83 in.)
81	81 mm (3.19 in.)
90	90 mm (3.54 in.)
108	108 mm (4.25 in.)
110	110 mm (4.33 in.)
180	180 mm (7.09 in.)
270	270 mm (10.63 in.)

e	
Top Hat Rail	
Code	**Description**
R	Plastic hat rail
S	Plastic hat rail
M	Metal hat rail
V	Screw mounting, variable positions

f	
Bottom Hat Rail	
Code	**Description**
R	Rockwell Automation custom plastic rail
S	Standard plastic rail
Blank	No bottom rail

g	
Current Rating	
Code	**Description**
Blank	0 A (no electrical connection)
16	16 A
25	32 A
45	63 A
125	125 A
200	200 A
250	250 A

Iso (Isolation) Busbar Adapters

141A	-	S	M	45	R	S	25
a		b	c	d	e	f	g

a	
Bulletin Number	
Code	Description
141A	Classic Mounting System

b	
Type	
Code	Description
S	Iso busbar adapter

c	
Length	
Code	Description
S	Short: 200 mm (7.87 in.)
M	Medium: 260 mm (10.2 in.)

d	
Width	
Code	Description
45	45 mm (1.77 in.)
54	54 mm (2.13 in.)
63	63 mm (2.48 in.)

e	
Top Hat Rail	
Code	Description
R	Plastic hat rail
S	Plastic hat rail

f	
Bottom Hat Rail	
Code	Description
R	Plastic hat rail
S	Plastic hat rail

g	
Current Rating	
Code	Description
Blank	0 A (no electrical connection)
25	Width "c" 45 mm (1.77 in.) = 25 A Width "c" 54 mm (2.13 in.) = 32 A
45	45 A

Busbar Adapters for Bulletin 140G Molded Case Circuit Breakers, 140MG Motor Protection Circuit Breakers, and 140MG Motor Circuit Protectors

141A	-	G	H	T
a		b	c	d

a	
Bulletin Number	
Code	Description
141A	Classic Mounting System

b	
Type	
Code	Description
G	Busbar adapters for Bulletin 140G and MG devices

c	
Length	
Code	Description
H	Frame size G, Frame size H
J	Frame size J
K	Frame size K
M	Frame size M

d	
Width	
Code	Description
T	Top Connection
B	Bottom Connection
U	Universal Connection

Panel Mounting Modules

141A	-	W	M	45	R	R
a		b	c	d	e	f

a	
Bulletin Number	
Code	Description
141A	Classic Mounting System

b	
Type	
Code	Description
W	Panel mounting module

c	
Length	
Code	Description
S	Short: 200 mm (7.87 in.)
M	Medium: 260 mm (10.2 in.)
L	Long: 320 mm (12.6 in.)

d	
Width	
Code	Description
45	45 mm (1.77 in.)
54	54 mm (2.13 in.)

e	
Top Hat Rail	
Code	Description
R	Plastic hat rail

f	
Bottom Hat Rail	
Code	Description
R	Plastic hat rail

Product Selection

Iso Busbar Adapters

- Two-part construction
  - Device Adapter Plate (DAP) (carrying the starter) snaps onto the base adapter
  - Base adapter remains on busbar when exchanging starters, providing isolation from live parts
- Test position with load circuit isolated
- Optional control plug makes the starter fully pluggable
- Adapters with assigned current ratings supply the load current to the starter/load feeder by means of wire connections
- Multiple adapters can be combined to bigger platforms by use of the connection clips
- Fits on 5 mm (0.19 in.) or 10 mm (0.39 in.) thick busbars
- Meets UL 508A feeder circuit spacing requirements

	Description	Rated Thermal Current I_{th} [A]	Width [mm (in.)]	Length [mm (in.)]	Rails	Pkg. Qty.	Cat. No.
	Iso Busbar Adapters with Wires - Short Length • Wires on Device Adapter Plates for electrical connection	25	45 (1.77)	200 (7.87)	2	1	141A-SS45RR25
		32	54 (2.13)				141A-SS54RR25
		45	54 (2.13)				141A-SS54RR45
		45	63 (2.48)				141A-SS63RR45
	Iso Busbar Adapters without Wires - Short Length • Two connection clips included (1)	Without electrical connections	45 (1.77)	200 (7.87)	1	1	141A-SS45R
			54 (2.13)				141A-SS54R
	Iso Busbar Adapters with Wires - Medium Length • Wires on Device Adapter Plates for electrical connection	25	45 (1.77)	260	2	1	141A-SM45RS25
		32	54 (2.13)				141A-SM54RS25
		45	54 (2.13)				141A-SM54RS45
		45	63 (2.48)				141A-SM63RS45
	Iso Busbar Adapters without Wires - Medium Length • Two connection clips included (1)	Without electrical connections	45 (1.77)	260	1	1	141A-SM45S
			54 (2.13)				141A-SM54S
			63 (2.48)				141A-SM63S

(1) Iso Busbar Adapters without electrical connections include two connection clips. They are intended to form bigger platforms, for example: reversing starters, starters with Smart Motor Controllers or PowerFlex® drives.

Standard Busbar Adapters

- Adapters plug directly onto the busbar
- Suitable for use with control plug
- Adapters with assigned current ratings supply the load current to the starter/load feeder by means of wire connections
- Multiple adapters can be combined to bigger platforms by use of the connection clips
- Fits on 5 mm (0.19 in.) or 10 mm (0.39 in.) thick busbars
- Meets UL 508A feeder circuit spacing requirements

	Description	Rated Thermal Current I_{th} [A]	Width [mm (in.)]	Length [mm (in.)]	Rails	Pkg. Qty.	Cat. No.
	Standard Busbar Adapters with Wires - Short Length • Wires for electrical connection	16	45 (1.77)	200 (7.87)	2	1	141A-GS45RR16
			54 (2.13)				141A-GS54RR16
		32	45 (1.77)				141A-GS45RR25
			54 (2.13)				141A-GS54RR25
		63	54 (2.13)				141A-GS54RR45
			63 (2.48)				141A-GS63RR45
			81 (3.19)				141A-GS81SS63
	Standard Busbar Adapters with Flexible Busbar Connectors - Short Length • Metal Hat Rail • For starters with 140MG-G/-H circuit protectors	125 (160[1])	180 (7.09)	200 (7.87)	1		141A-GS180M125
			270 (10.63)				141A-GS270M125
	Standard Busbar Adapters without Wires — Short Length • Two connection clips included [2]	Without electrical connections	45 (1.77)	200 (7.87)	1		141A-GS45R
			54 (2.13)				141A-GS54R
			72 (2.83)				141A-GS72S
			81 (3.19)				141A-GS81S
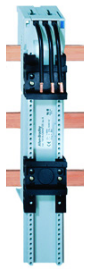	Standard Busbar Adapters with Wires — Medium Length • Wires for electrical connection	32	45 (1.77)	260 (10.23)	2	1	141A-GM45RS25
			54 (2.13)				141A-GM54RS25
		63	54 (2.13)				141A-GM54RS45
			63 (2.48)				141A-GM63RS45
	Standard Busbar Adapters without Wires — Medium Length • Two connection clips included [2]	Without electrical connections	45 (1.77)	260 (10.23)	1		141A-GM45S
			54 (2.13)				141A-GM54S
			63 (2.48)				141A-GM63S

(1) IEC Rating = 160 A
(2) Standard Busbar Adapters without electrical connections include two connection clips. They are intended to form bigger platforms; for example: for reversing starters, starters with Smart Motor Controllers or PowerFlex drives.

Standard Busbar Adapters with Terminals

- Adapters plug directly onto the busbar
- Adapters ≤ 81 mm (3.19 in.) wide can be combined to bigger platforms by use of the connection clips
- Fits on 5 mm (0.19 in.) or 10 mm (0.39 in.) thick busbars
- Meets UL 508A feeder circuit spacing requirements

	Description	Rated Thermal Current I_{th} [A]	Width [mm (in.)]	Length [mm (in.)]	Rails	Pkg. Qty.	Cat. No.
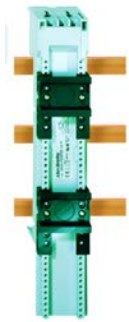	Standard Busbar Adapters with Terminals • Short Length • With terminals for electrical connection	25(1)	45 (1.77)	200 (7.87)	1	1	141A-FS45S25
		80(2)	54 (2.13)				141A-FS54S63
			63 (2.48)				141A-FS63S63
			72 (2.83)				141A-FS72S63
			81 (3.19)				141A-FS81S63
	Standard Busbar Adapters with Terminals • Medium Length • With terminals for electrical connection	25(1)	45 (1.77)	260 (10.23)	2		141A-FM45SS25
		80(2)	54 (2.13)				141A-FM54SS63
			63 (2.48)				141A-FM63SS63
			72 (2.83)				141A-FM72SS63
			81 (3.19)				141A-FM81SS63
	Standard Busbar Adapter with Terminals on Top • With box terminals on top for electrical connection • Wire size: 70 mm^2 (2/0 AWG) • Universal mounting capability with sliding pocket nuts (M4)	200	108 (4.25)	222 (8.74)	–	1	141A-FS108V200T
	Standard Busbar Adapter with Terminals on Top • With box terminals on top for electrical connection • Wire size: 120 mm^2 (250 MCM) • Universal mounting capability with sliding pocket nuts (M4)	250	110 (4.33)	320 (12.6)			141A-FL110V250T

(1) Terminal size: 6 mm^2 (10 AWG). Requires a Cat. No. 141A-FTS25 spacing adapter for UL 508A applications.
(2) Terminal size: 16 mm^2 (6 AWG). Requires a Cat. No. 141A-FTS63 spacing adapter for UL 508A applications.

Busbar Adapters for Circuit Breakers

	Description	For Use With	Rated Thermal Current I_{th} [A]	Width [mm]	Pkg. Qty.	Cat. No.
	Standard Busbar Adapters with Flexible Connecting Bars for Electrical Connection • Meets UL 508A feeder circuit spacing requirements – Terminal lugs for circuit breaker 140G-_-TL* required, sold separately	140G G-Frame 140MG G-Frame 140G H-Frame 140MG H-Frame (Top Connection)	125 (160(1))	90 (3.54)	1	141A-GHT
		140G G-Frame 140G H-Frame (Bottom Connection)	125 (160(1))	90 (3.54)		141A-GHB
	Standard Busbar Adapters with Flexible Connecting Bars for Electrical Connection • Meets UL 508A feeder circuit spacing requirements – Terminal lugs for circuit breaker 140G-_-TL* required, sold separately	140G J-Frame 140MG J-Frame (Top Connection)	250	105 (4.13)		141A-GJT
		140G J-Frame 140MG J-Frame (Bottom Connection)	250	105 (4.13)		141A-GJB
		140G K-Frame 140MG K-Frame (Top or Bottom Connection)	400	140 (5.51)		141A-GKU
	Standard Busbar Adapters with Rear Connecting Studs for Electrical Connection • Meets UL 508A feeder circuit spacing requirements	140G M-Frame 140MG M-Frame (Top or Bottom Connection)	600	238 (9.37)		141A-GMU

(1) IEC rating = 160 A

Accessories for Standard and Iso Busbar Adapters

	Description	Width [mm (in.)]	Pkg. Qty.	Cat. No.
	Top Hat Rails • 35 mm (1.38 in.) • Slides onto busbar adapters, fixation with 1 or 2 screws (included)	45 (1.77)	10	141A-AHR45
		54 (2.13)		141A-AHR54
		63 (2.48)		141A-AHR63
		72 (2.83)		141A-AHS72
		81 (3.19)		141A-AHS81
	Control Plug • Pull-apart terminal block allows fast and simple disconnection of control wiring. • Control Plug Holder included.	8 Pole	1	141A-APC8
		10 Pole	1	141A-APC10
		12 Pole	1	141A-APC12
	Control Plug Holder • Suitable for use with 8-, 10-, or 12-pole control plugs.			141A-APH
	Spacer module for Standard or ISO busbar adapters • For 9 mm (0.35 in.) spacing of busbar adapters. • Use included connection clips (Cat. No. 141A-AK) for attaching the spacer module to the busbar adapters. • 200 mm (7.87 in.) long	9 (0.35)	10	141A-AS9B
	Connection Clip • For joining multiple busbar adapters and spacer modules (as spare parts only, typical required quantity included with the adapters)		50	141A-AK
	Micro Switch • 1 N.C. Contact • For Iso busbar adapters only. Automatically drops out the contactor when the DAP (Device Adapter Plate) (carrying the starter) is unplugged from the base of the Iso busbar adapter.		10	141A-AS
	Terminal Shroud • Required for UL 508A applications • For use with 25 A standard busbar adapters with terminals (Cat. No. 141A-FS...25, 141A-FM...25)		4	141A-FTS25
	• For use with 63 A standard busbar adapters with terminals (Cat. No. 141A-FS...63, 141A-FM...63)		4	141A-FTS63

UL Fuse Bases and Fuse Holders

	Description	Max Voltage	Rating	Pkg. Qty.	Cat. No.
	Fuse base, 3-pole, Class CC • For UL Class CC fuses • 27 mm (1.06 in.) wide • Withstand rating: 200 kA (600V) • With spring terminals • Meets UL 508A feeder circuit spacing requirements	600V	30 A	1	141A-NFHCC30
	Fuse base, 3-pole, Class CC with light-emitting diode (LED) • For UL Class CC fuses • 27 mm (1.06 in.) wide • Withstand rating: 200 kA (600V) • With spring terminals • Meets UL 508A feeder circuit spacing requirements	600V	30 A	1	141A-NFHCC30L
	Class J Busbar Fuse Holder • Top or bottom connection • For UL Class J fuses • No tools required to change fuses • Meets UL 508A feeder circuit spacing requirements		30 A	1	141A-NFJ30C
			60 A	1	141A-NFJ60C
			100 A	1	141A-NFJ100C
			200 A	1	141A-NFJ200C
	Class J Busbar Fuse Base • For mounting on 10 mm (0.39 in.) wide and double-T busbars • Top or bottom connection • For UL Class J fuses • Meets UL 508A feeder circuit spacing requirements		400 A	1	141A-NFJ400

Fused and Non-fused IEC Switch Disconnectors

	Description	Size	Terminals	Rating	Pkg. Qty.	Cat. No.
	Busbar Fuse Switch • 3-pole switch disconnector with fuses	• For D02 fuse links for D01 fuses, use reducer	400V AC	63 A (1)	1	141A-NF0102
		For 10 x 38 NFC cylindrical fuses	690V AC	32 A	1	141A-NF1038
	NH Fuse Switch Disconnector • Connection bottom or top • Size 00 for plugging on 5 mm (0.19 in.) or 10 mm (0.39 in.) thick and double-T busbars. • Sizes 1 and 2 conversion kit 141A-NFAFR5 is required for plugging on 5 mm (0.19 in.) thick busbars. • Size 3 only for plugging on 10 mm (0.39 in.) and double-T busbars.	Size 00, 200 x 106 mm (7.87 x 4.17 in.)	Box terminals 70 mm^2	160 A	1	141A-NFD160
		Size 1, 243 x 184 mm (9.57 x 7.24 in.)	M10 120 mm^2	250 A	1	141A-NFD250
		Size 2, 288 x 210 mm (11.34 x 8.27 in.)	M10 240 mm^2	400 A	1	141A-NFD400
		Size 3, 300 x 256 mm (11.81 x 10.08 in.)	M12 240 mm^2	630 A	1	141A-NFD630
	Switch Disconnector with NH Fuses • 3-pole, bottom connections • Multi-function handle • Lockable in OFF position with 3 padlocks • FLAG indicator shows the switch status • Fuse can be changed without tools • Applicable as main isolator according to IEC/EN 60204-1 (main switch) • Main switch only for utilization categories AC-23A/B (500V/125 A), AC-23B (690V/125 A)	Size 00, 200 x 106 mm (7.87 x 4.17 in.)	Box terminals 70 mm^2	125 A	1	141A-NFD125SB
		Size 1, 286 x 184 mm (11.26 x 7.24 in.)	M10 120 mm^2	250 A	1	141A-NFD250SB
	Non-Fused Switch Disconnector for External Rotary Operating Handle • 3-pole, bottom connections • FLAG indicator shows the switch status • Applicable as main isolator as per IEC/EN 60204-1 (main switch) • Can also be used as an Emergency Off switch in combination with the door coupling twist handle • Main switch and Emergency Off switch only for utilization categories AC-23A/B (500V/125 A) AC-23B (690V/125 A) (additional extension shaft and door handle required)	Size 00, 200 x 106 mm (7.87 x 4.17 in.)	Box terminals 70 mm^2	160 A	1	141A-N160SB
		Size 1, 286 x 184 mm (11.26 x 7.24 in.)	M10 120 mm^2	320 A	1	141A-N320SB

(1) The use of spacer module 141A-NFAD is recommended for a continuous load above 35 A.

Accessories for Fused Devices

	Description		Pkg. Qty.	Cat. No.
	Pilot Switch • For use with Cat. No. 141A-NFD* NH-fuse switch disconnectors • Signaling ON/OFF position of lid • 250V AC/5 A; 30V DC/4 A	Size 1 (Series B)	1	141A-NFASNC1
		Size 00, Size 2...3	1	141A-NFASNFD
	Reducer • D02 reducer for D01 fuses • For use with 141A-NF0102		20	141A-NFAR
	Spacer Module • Connectable on both sides • 9 mm (0.35 in.) wide • For use with 141A-NF*			141A-NFAD
	Conversion Kit • For NH-fuse switch disconnector to reduce size 1 and 2 on to 5 mm (0.19 in.) busbars	Size 1 and 2	1	141A-NFAFR5
	Rotary Operating Handle • For use with Cat. No. 141A-N160SB or 141A-N320SB non-fused switch disconnector • IP66	Black	1	141A-NDN66
		Red/Yellow	1	141A-NDRY66
	Operating Shaft • For use with Cat. No. 141A-NDN66 or 141A-NDRY66 rotary operating handle	290 mm (11.42 in.)	1	141A-ND1
		490 mm (19.29 in.)	1	141A-ND2
	Pilot Switch • For use with Cat. No. 141A-N*SB fused and non-fused switch disconnectors • 250V AC/5 A; 30V DC/4 A	Size 00, 1 160/320 A	1	141A-NFASNC0

Busbars

	Height x Width [mm (in.)]	Current Rating [A][1]	UL Current Rating [A]	Length = 800 mm (31.5 in.)		Length = 1200 mm (47.24 in.)		Length = 2400 mm (94.5 in.)	
				Pkg. Qty.	Cat. No.	Pkg. Qty.	Cat. No.	Pkg. Qty.	Cat. No.
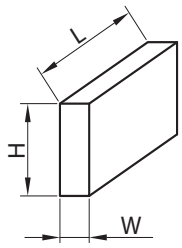	12 x 5 (0.47 x 0.19)	200	150	3	141A-B125A	3	141A-B125C	12	141A-B125N
	15 x 5 (0.59 x 0.19)	250	–		141A-B155A		141A-B155C		141A-B155N
	20 x 5 (0.79 x 0.19)	320	362		141A-B205A		141A-B205C		141A-B205N
	25 x 5 (0.98 x 0.19)	400	–		141A-B255A		141A-B255C		141A-B255N
	30 x 5 (1.18 x 0.19)	450	500		141A-B305A		141A-B305C		141A-B305N
	12 x 10 (0.47 x 0.38)	360	300		141A-B1210A		141A-B1210C	6	141A-B1210N
	20 x 10 (0.79 x 0.38)	520	564		141A-B2010A		141A-B2010C		141A-B2010N
	30 x 10 (1.18 x 0.38)	630	756		141A-B3010A		141A-B3010C		141A-B3010N

(1) Ratings shown are based on tested conditions at an ambient temperature of 35 °C (95 °F) and a busbar temperature of 65 °C (149 °F).

TT Busbars

Height x Width [mm (in.)]	Size	Current Rating [A][1]	UL Current Rating [A]	Length = 2400 mm (94.5 in.)	
				Pkg. Qty.	Cat. No.
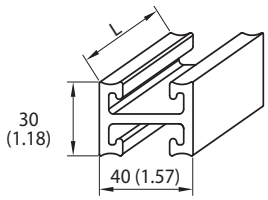	TT 500 mm^2	920	1200	1	141A-BT11NZ
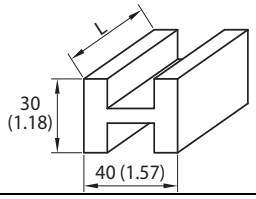	TT 720 mm^2	1175	1400	1	141A-BT12NZ

(1) Ratings shown are based on tested conditions at an ambient temperature of 35 °C (95 °F) and a busbar temperature of 65 °C (149 °F).

Busbar Supports

- 60 mm (2.36 in.) pole spacing

	Description		Busbar Size	Pkg. Qty.	Cat. No.
	Busbar Support	• 3-pole with inside mounting holes • Meets UL 508A feeder circuit spacing requirements[1]	12, 20, 30 x 5 mm (0.47, 0.79, 1.18 x 0.19 in.) or 12, 20, 30 x 10 mm (0.47, 0.79, 1.18 x 0.38 in.)	10	141A-TU3
		• 1-pole • Meets UL 508A feeder circuit spacing requirements • includes PE and N labels		1	141A-TR1
		• 3-pole with inside mounting holes • for applications according to IEC 61439-1 • approved for branch circuit applications per UL508	12...30 x 5 mm (0.47...1.18 x 0.19 in.) or 12...30 x 10 mm (0.47...1.18 x 0.38 in.)	10	141A-TR3
		• 4-pole with inside mounting holes • for applications according to IEC 61439-1 • approved for branch circuit applications per UL508			141A-TR4
	Busbar Support with terminals • 3-pole, with terminals for electrical connections • 1.5...16 mm^2 (#16...6 AWG)		12...30 x 5 mm (0.47...1.18 x 0.19 in.) or 12...30 x 10 mm (0.47...1.18 x 0.38 in.)	10	141A-TR3F16
	Double-T Busbar Support • 60 mm (2.36 in.) spacing • Meets UL 508A feeder circuit spacing requirements[1]		3-pole	3	141A-T13
	Busbar End Cover • Prevents contact with the busbar ends and prevents busbars from sliding • The end cover can easily be clipped on the busbar support		141A-TU3 or 141A-TR3	10	141A-TR3E
			141A-TR4		141A-TR4E
			141A-T13	4	141A-T13E

(1) To meet UL 508A spacing requirements, this product also requires support spacers or a rear panel shroud.

3-Pole Supply Modules

	Description		Busbar Size	Pkg. Qty.	Cat. No.
	For Round conductors	• 6...50 mm^2 (10...2/0 AWG) • Flat laminated Cu conductors 7 x 4...9 x 6 mm (0.28 x 0.16...0.35 x 0.24 in.) • 54 mm (2.13 in.) wide • Meets UL 508A feeder circuit spacing requirements	12...30 x 5 mm (0.47...1.18 x 0.19 in.) or 12...30 x 10 mm (0.47...1.18 x 0.38 in.) or TT	1	141A-VN370
		• Round conductors 16...120 mm^2 (6 AWG...250 MCM) • Flat laminated Cu conductors 12 x 4 - 15.5 x 10 mm (0.47 x 0.16...0.61 x 0.38 in.) • 81 mm (3.19 in.) wide • Meets UL 508A feeder circuit spacing requirements		1	141A-VN3120
		• 95...185 mm^2 (3/0 AWG...350 MCM) • 135 mm (5.31 in.) wide	12...30 x 5 mm (0.47...1.18 x 0.19 in.) or 12...30 x 10 mm (0.47...1.18 x 0.38 in.) or TT	1	141A-VN3185
		• 95...300 mm^2 (3/0 AWG...600 MCM) • 135 mm (5.31 in.) wide • Approved for branch circuit applications per UL508		1	141A-VN3300R
	For Flat Conductors	• Up to 32 x 20 mm (1.26 x 0.79 in.) • Equivalent to 625 mm^2 (1250 MCM) round conductor ampacity • 135 mm (5.31 in.) wide		1	141A-VN3300F
	Set of 3 terminals	• For round conductors • 95...300 mm^2 (3/0 AWG...600 MCM) • 153 mm (6.02 in.) wide (3 single poles of 51 mm (2.01 in.) each) • Meets UL 508A feeder circuit spacing requirements • Requires Cat. No. 141A-BK180 or 141A-BK228 terminal cover	12...30 x 5 mm (0.47...1.18 x 0.19 in.) or 12...30 x 10 mm (0.47...1.18 x 0.38 in.) or TT	1	141A-VU3300R
		• For flat conductors up to 32 x 20 mm (1.26 x 0.79 in.) • Equivalent to 625 mm^2 (1250 MCM) • 153 mm (6.02 in.) wide (3 single poles of 51 mm (2.01 in.) each) • Meets UL 508A feeder circuit spacing requirements • requires Cat. No. 141A-BK180 or 141A-BK228 terminal cover		1	141A-VU3300F

Single Terminals for Connecting to Busbars

	Description	Busbar Size	Pkg. Qty.	Cat. No.
	2.5...16 mm^2 (#14...6 AWG)	12...30 x 5 mm (0.47...1.18 x 0.19 in.)	25	141A-VS116
		12...30 x 10 mm (0.47...1.18 x 0.38 in.)		141A-VS216
	4...35 mm^2 (#12...2 AWG)	12...30 x 5 mm (0.47...1.18 x 0.19 in.)		141A-VS135
		12...30 x 10 mm (0.47...1.18 x 0.38 in.)		141A-VS235
	16...70 mm^2 (#6...2/0 AWG)	12...30 x 5 mm (0.47...1.18 x 0.19 in.)		141A-VS170
		12...30 x 10 mm (0.47...1.18 x 0.38 in.)		141A-VS270
	16...120 mm^2 (#6...250 MCM)	12...30 x 10 mm (0.47...1.18 x 0.38 in.)		141A-VS2120

Brace Terminals

	Description	Max Terminal Space (W x H) [mm (in.)]	Busbar Size	Pkg. Qty.	Cat. No.
	• 3-pole • For connecting flat or flexible copper busbars • Meets UL 508A feeder circuit spacing requirements	55 x 28 (2.17 x 1.1)	30 x 10 mm (1.18 x 0.38 in.) or TT	1	141A-VB75528F
		68 x 28 (2.68 x 1.1)			141A-VB76828F
		105 x 28 (4.13 x 1.1)			141A-VB710528F

Terminal Covers

	Description	Busbar Size	Pkg. Qty.	Cat. No.
	Terminal Cover • Finger protection when busbars supplied with single terminals • Attaches directly to busbars. • Height: 180 mm (7.09 in.), Width: 54 mm (2.13 in.)	12...30 x 5 mm (0.47...1.18 x 0.19 in.) or 12...30 x 10 mm (0.47...1.18 x 0.38 in.)	1	141A-BK1
	Terminal Cover Kit • Finger protection when busbars are supplied by Cat. No. 141A-VU3300_ supply module • Attaches directly to busbars • Height: 200 mm (7.87 in.) • Depth: 90 mm (3.54 in.)	Width: 180 mm (7.09 in.)	1	141A-BK180
		Width: 228 mm (8.98 in.)	1	141A-BK228
	Terminal Cover Components • Customized terminal cover width using end supports, front shroud, and top/bottom shroud • Shrouds can be cut to desired width • Attaches directly to busbars • Cat. Nos. 141A-BKH, -BKC, and -BKS must be installed together	Left and right supports	1	141A-BKH
		Front shroud 1100 mm (43.3 in.)	1	141A-BKC
		Top/bottom shroud 1100 mm (43.3 in.)	1	141A-BKS

Busbar Covers and Shrouds

	Description	Busbar Size	Pkg. Qty.	Cat. No.
	Busbar Shroud Cover • 200 x 1100 mm (7.87 x 43.3 in.), covers all three busbars	12...30 x 5 mm (0.47...1.18 x 0.19 in.) or 12...30 x 10 mm (0.47...1.18 x 0.38 in.)	2	141A-BCF1
	Busbar Shroud Holder • Two required per section of Busbar Shroud Cover		10	141A-BCF1H
	Single-pole Busbar Covers • Snap-on profile for single busbars for protection against electric shock.	12...30 x 5 mm (0.47...1.18 x 0.19 in.)	10	141A-BS5
		12...30 x 10 mm (0.47...1.18 x 0.38 in.)		141A-BS10
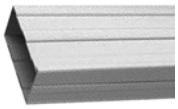	Single-pole Busbar Cover • For double-T busbars • Length: 1 m (39.37 in.); can be cut to length	Double-T	5	141A-BCT1
	Compartment Section • Fits to Cat. No. 141A-T13 double-T busbar supports • Length: 2400 x 48 mm (94.5 x 1.89 in.); can be cut to length		1	141A-BST48
	Panel Busbar Shroud • Provides isolation between busbar and panel (required for feeder circuit applications per UL 508A) • For use with Cat. No. 141A-TU3 supports. 240 x 810 mm (9.45 x 31.9 in)	All	2	141A-BCR
	Busbar Support Spacer — Standard • Fits under Standard Busbar Supports, Cat. No. 141A-TU3 • Adds 20 mm (0.79 in.) to the depth of the busbar support • Fulfills phase-to-ground spacing requirements for UL508A applications • Panel Busbar Shroud, Cat. No. 141A-BCR, not required	12, 20, 30 x 5 mm (0.47, 0.79, 1.18 x 0.19 in.) or 12, 20, 30 x 10 mm (0.47, 0.79, 1.18 x 0.38 in.)	10	141A-TS3

Busbar Accessories

	Description	Busbar Size	Pkg. Qty.	Cat. No.
	Busbar Connector • System spacing 5...10 mm (0.19...0.38 in.) • 55 mm (2.16 in.) length	12...20 x 5 mm (0.47...0.79 x 0.19 in.) or 12...20 x 10 mm (0.47...0.79 x 0.38 in.)	12	141A-VC3A
	Busbar Connector • System spacing 13...20 mm (0.52...0.79 in.) • 40 mm (1.57 in.) length	12...30 x 5 mm (0.47...1.18 x 0.19 in.) or 12...30 x 10 mm (0.47...1.18 x 0.38 in.)	6	141A-VC3B
	Double-T Busbar Connectors • System Spacing 100...110 mm (3.94...4.33 in.) • 150 mm (5.91 in.) length	Double-T Busbars 141A-BT11NZ, 141A-BT12NZ	3	141A-VC5G
	Phase Separator • For UL installation of busbar connectors • 3-pole, including two mounts • For use with busbar connectors • For use with Cat. No. 141A-VC3A, -VC3B, -VC5G	Width: 105 mm (4.13 in.)	1	141A-PS105
		Width: 145 mm (5.71 in.)		141A-PS145
		Width: 200 mm (7.87 in.)		141A-PS200

Panel Mounting Modules

	Description		Width [mm (in.)]	Rails	Pkg. Qty.	Cat. No.
	Mounting Module	• Short Length • 228 mm (8.98 in.) tall • For 2-component starters	45 (1.77)	2	1	141A-WS45RR
			54 (2.13)			141A-WS54RR
		• Medium Length • 283 mm (11.14 in.) tall • For 3-component starters that use Bulletin 193 E1 Plus™ Electronic Overload Relays	45 (1.77)	2	1	141A-WM45RR
			54 (2.13)			141A-WM54RR
		• Long Length • 333 mm (13.11 in.) tall • For 3-component starters that use Bulletin 193 E3™ or E300™ Electronic Overload Relays	54 (2.13)	2	1	141A-WL54RR

Specifications

Figure 18 - Current-carrying Capacity of Copper Busbars

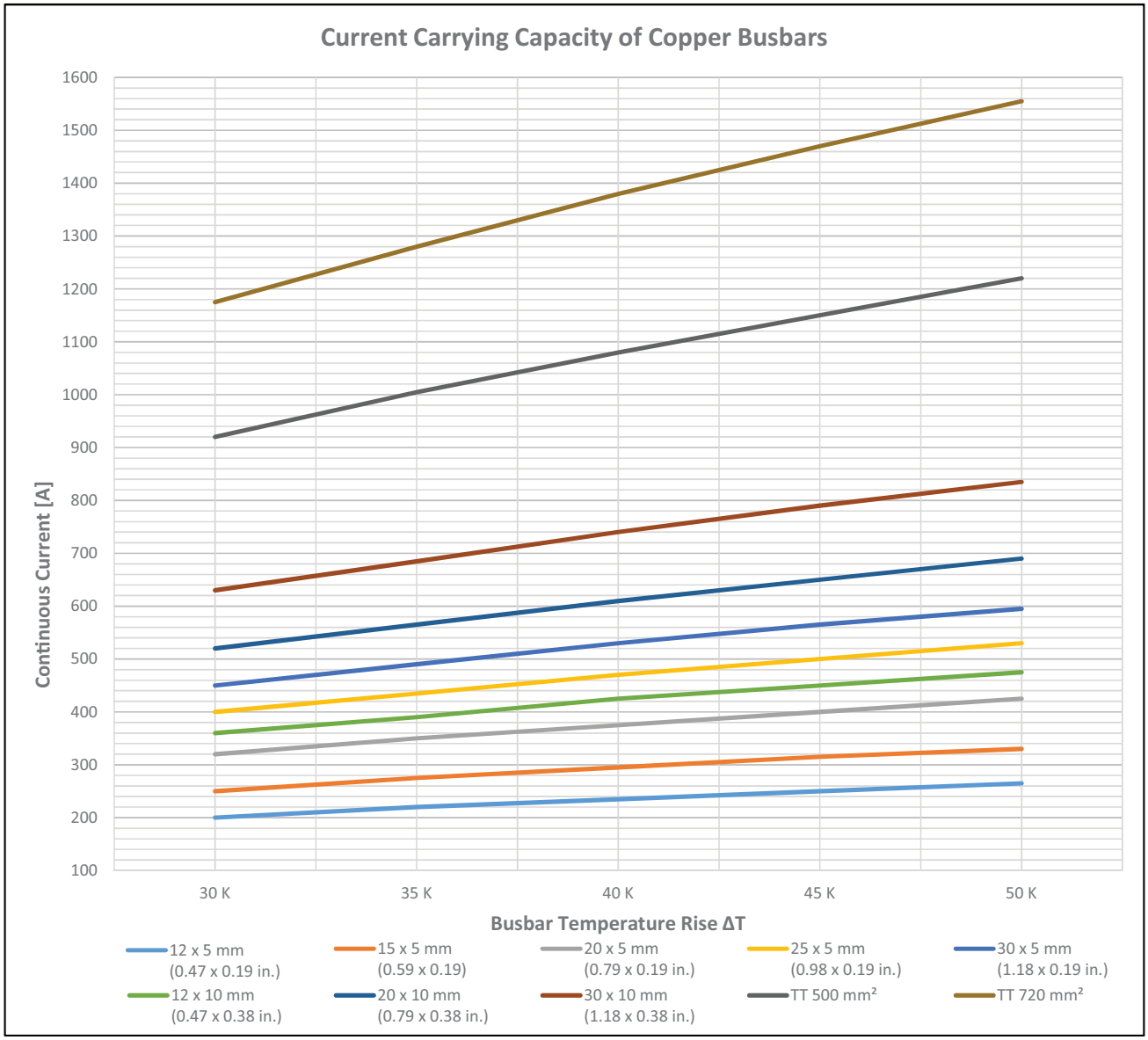

Wiring

Table 5 - Adapter Data

		Iso Adapters		Standard Adapters with Wire Connections				Standard Adapters with Box Terminals			
		141A-S		141A-G				141A-F			
Rated current at 60 °C I_{th} (1)	[A]	32	63	16	32	63	125	32	63	200	250
stranded	[mm²]	6	10	4	6	10	–	4	16	6...70	35...120
	[AWG]	10	8	12	10	8	–	12	6	10...2/0	2...250 MCM
solid	[mm²]	–	–	–	–	–		4	16	6...70	35...120
	[AWG]	–	–	–	–	–		12	6	10...2/0	2...250 MCM
laminated copper	[mm²]	–	–	–	–	–	43	–	–	–	–
	[AWG]	–	–	–	–	–	1/0	–	–	–	–
Insulation rating of conductors		105 °C (221 °F)		105 °C (221 °F)				–	–	–	–

(1) The admissible load of a complete system depends on the system topography and the application parameters. Factors of influence are ambient temperature, air circulation, busbar load, distribution of busbar load, mix of adapters and switchgear components.

Table 6 - Supply Modules

		Supply Adapters								
		141A-TR3F16	141A-VN370, -CVN350	141A-CVN3150	141A-VN3120	141A-VN3185	141A-VN3300R	141A- VN3300F	141A-VU3300R	141A- VU3300F
stranded	[mm²]	1.5...16	6...50	35...150	35...120	95...185	150...300	–	120...300	–
	[AWG]	16...6	10...1/0	2...300 MCM	2...250 MCM	No. 3/0...350 MCM	300...600 MCM	–	250...600 MCM	–
solid	[mm²]	1.5...16	6...50	35...150	35...120	95...185	150...300	–	120...300	–
	[AWG]	16...6	10...1/0	2...300 MCM	2...250 MCM			–	250...600 MCM	–
laminated copper	[mm]	–	–	–	–	–	–	3 x 20 x 1... 10 x 32 x 1	–	3 x 20 x 1... 10 x 32 x 1
	[in.]							0.12 x 0.79 x 0.04... 0.39 x 1.26 x 0.04		0.12 x 0.79 x 0.04... 0.39 x 1.26 x 0.04
Tightening Torque	[N•m]	–	8...10	12...15/	12...15	30	30	30	30	30
	[lb•in]	–	71...89	106...133	106...133	266	266	266	266	266

Table 7 - Class J Busbar Fuse Bases

		Class J Busbar Fuse Bases		
		141A-NFJ100	141A-NFJ200	141A-NFJ400
stranded	[mm²]	6...70	10...150	16...300
	[AWG]	10...2/0	8...300 MCM	4...600 MCM
solid	[mm²]	6...70	10...150	16...300
	[AWG]	10...2/0	8...300 MCM	4...600 MCM
Tightening Torque	[N•m]	14...16	16...18	38...40
	[lb•in]	125...142	142...160	336...355

Table 8 - Single Terminals

			Single Terminals		
			141A-VS116, 141A-VS216	141A-VS135, 141A-VS235	141A-VS170, 141A-VS270
stranded		[mm^2]	2.5...16	4...35	16...70
		[AWG]	14...6	12...2	6...2/0
solid		[mm^2]	2.5...16	4...35	16...70
		[AWG]	14...6	12...2	6...2/0
laminated copper	1 conductor	[mm (in.)]	–	5 x 9 x 0.8	5 x 9 x 0.8
	2 conductors	[mm (in.)]	–	–	5 x 9 x 0.8
Clamping area	Width x Height	[mm (in.)]	7.5 x 7.5 (0.29 x 0.29)	10.5 x 11 (0.41 x 0.43)	14 x 14 (0.55 x 0.55)
Tightening Torque		[N•m]	4	6	10
		[lb•in]	35	53	120

Table 9 - Busbars

Attribute		Value
Material		E-CU blank or tinned
Busbar widths 5 or 10 mm (0.19 or 0.38 in.) thick	[mm (in.)]	12, 15, 20, 25, 30 (0.47, 0.59, 0.79, 0.98, 1.18)
Tolerance of thickness	[mm (in.)]	+0.1/-0.3 (+0.004/-0.012)
Corner radius	[mm (in.)]	0.5
Tolerance of center spacing	[mm (in.)]	60 ±0.5 (2.36 ±0.02)
Standard		DIN 46433

Table 10 - Busbar Specifications

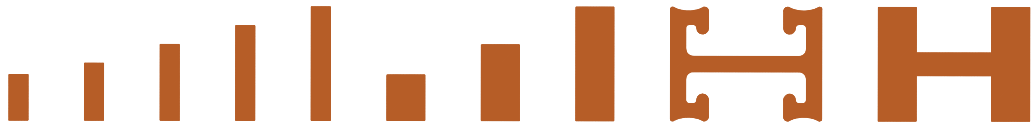

Specification			Busbar Style									
			A	B	C	D	E	F	G	H	J	K
Cross Section		[mm^2]	60	75	100	125	150	120	200	300	500	720
Dimensions		[mm]	12 x 5	15 x 5	20 x 5	25 x 5	30 x 5	12 x 10	20 x 10	30 x 10	TT 30 x 40	TT 30 x 40
		[in.]	0.47 x 0.19	0.59 x 0.19	0.79 x 0.19	0.98 x 0.19	1.18 x 0.19	0.47 x 0.38	0.79 x 0.38	1.18 x 0.38	TT 1.18 x 1.57	TT 1.18 x 1.57
Rated Current	UL	[A]	150	–	362	–	500	300	564	756	1200	1400
	IEC	[A]	200	250	320	400	450	360	520	630	960	1250
Cat. No.(1)			141A-B125*	141A-B155*	141A-B205*	141A-B255*	141A-B305*	141A-B1210*	141A-B2010*	141A-B3010*	141A-BT11NZ	141A-BT12NZ

(1) For Flat busbars, replace the asterisk (*) with one of the following letters to specify the correct length: A = 800 mm (31.49 in.), C = 1200 mm (47.24 in.), N = 2400 mm (94.49 in.). Cat. Nos. 141A-BT11NZ and 141A-BT12NZ have a length of 2400 mm (94.49 in.).

Table 11 - UL Short-circuit Current Rating (SCCR)

- Support spacing at 800 mm (31.5 in.)

Cat. No.	Description	Max Circuit Breaker Cat. No.	Circuit Breaker Rating	SCCR		Max Class CC, J, or T Fuse	SCCR	Max Class CC, J, or T Fuse	SCCR
				480V	600V		480V		600V
141A-B125*	12 x 5 mm (0.47 x 0.19 in.) Copper Busbar	140G-J6I3-D25 140G-J6X3-D25	250 A	65 kA	25 kA	400 A	100 kA	400 A	100 kA
141A-B1210*	12 x 10 mm (0.47 x 0.38 in.) Copper Busbar	140G-K6H3-D40	400 A	65 kA	35 kA	400 A	100 kA	400 A	100 kA
141A-B205*	20 x 5 mm (0.79 x 0.19 in.) Copper Busbar	140G-K6H3-D40	400 A	65 kA	35 kA	500 A	100 kA	400 A	100 kA
141A-B2010*	20 x 10 mm (0.79 x 0.38 in.) Copper Busbar	140G-K6H3-D40	400 A	65 kA	35 kA	500 A	100 kA	400 A	100 kA
141A-B305*	30 x 5 mm (1.18 x 0.19 in.) Copper Busbar	140G-K6H3-D40	400 A	65 kA	35 kA	500 A	100 kA	500 A	100 kA
141A-B3010*	30 x 10 mm (1.18 x 0.38 in.) Copper Busbar	140G-K6H3-D40	400 A	65 kA	35 kA	600 A	100 kA	600 A	100 kA
141A-BT1*NZ	TT Copper Busbar	140G-M6H3-D80	800 A	65 kA	35 kA	800 A Class T	100 kA	600 A	100 kA
141A-TU3	Busbar Support	140G-K6H3-D40	400 A	65 kA	35 kA	600 A	100 kA	600 A	100 kA
141A-CTU3	Busbar Support	140G-K6H3-D40	400 A	65 kA	35 kA	600 A	100 kA	600 A	100 kA
141A-T13	Busbar Support	140G-M6H3-D80	800 A	65 kA	35 kA	800 A Class T	100 kA	600 A	100 kA
141A-TR3E	Busbar Support End Cover	140G-K6H3-D40	400 A	65 kA	35 kA	600 A	100 kA	600 A	100 kA
141A-T13E	Busbar Support End Cover	140G-M6H3-D80	800 A	65 kA	35 kA	800 A Class T	100 kA	600 A	100 kA
141A-VN370	Supply Module	140G-J6I3-D25 140G-J6X3-D25	250 A	65 kA	25 kA	400 A	100 kA	400 A	100 kA
141A-VN3120	Supply Module	140G-K6H3-D40	400 A	65 kA	35 kA	600 A	100 kA	600 A	100 kA
141A-VN3300R	Supply Module	140G-K6H3-D40	400 A	65 kA	35 kA	500 A	100 kA	300 A	100 kA
141A-VU3300R	Supply Module	140G-K6H3-D40	400 A	65 kA	35 kA	500 A	100 kA	300 A	100 kA
141A-VS54136F	Profile Terminals	140G-M6H3-D80	800 A	65 kA	35 kA	800 A Class T	100 kA	600 A	100 kA
141A-GHT	Circuit Breaker Adapter	140G-G6* or 140MG-G8*	125 A	65 kA	25 kA	–	–	–	–
141A-GHB	Circuit Breaker Adapter	140G-G6* or 140MG-G8*	125 A	65 kA	25 kA	–	–	–	–
141A-GHT	Circuit Breaker Adapter	140G-H6* or 140MG-H8*	125 A	65 kA	25 kA	–	–	–	–
141A-GHB	Circuit Breaker Adapter	140G-H6* or 140MG-H8*	125 A	65 kA	25 kA	–	–	–	–
141A-GJT	Circuit Breaker Adapter	140G-J6* or 140MG-J8*	250 A	65 kA	25 kA	–	–	–	–
141A-GJB	Circuit Breaker Adapter	140G-J6* or 140MG-J8*	250 A	65 kA	25 kA	–	–	–	–
141A-GKU	Circuit Breaker Adapter	140G-K6* or 140MG-K8*	400 A	65 kA	35 kA	–	–	–	–
141A-GMU	Circuit Breaker Adapter	140G-M6* or 140MG-M8*	600 A	65 kA	42 kA	–	–	–	–
141A-SS*25 141A-SM*25	Busbar Adapter	140M-C2E-B16	1.6 A	65 kA	47 kA	30 A	100 kA	30 A	100 kA
		140M-C2E-C10	10 A	65 kA	30 kA	30 A	100 kA	30 A	100 kA
		140M-C2E-C25	25 A	30 kA	30 kA	30 A	100 kA	30 A	100 kA
		140M-D8E-C25	25 A	65 kA	30 kA	30 A	100 kA	30 A	100 kA
		140M-D8E-C32(1)	32 A	65 kA	30 kA	30 A	100 kA	30 A	100 kA
141A-GS*25 141A-GM*25 141A-FS*25 141A-FM*25,	Busbar Adapter	140M-C2E-B16	1.6 A	65 kA	47 kA	30 A	100 kA	30 A	100 kA
		140M-C2E-C10	10 A	65 kA	30 kA	30 A	100 kA	30 A	100 kA
		140M-C2E-C25	25 A	30 kA	30 kA	30 A	100 kA	30 A	100 kA
		140M-D8E-C25	25 A	65 kA	30 kA	30 A	100 kA	30 A	100 kA
		140M-D8E-C32	32 A	65 kA	30 kA	30 A	100 kA	30 A	100 kA
141A-SS*45 141A-SM*45 141A-GS*45 141A-GM*45	Busbar Adapter	140M-F8E-C32	32 A	65 kA	30 kA	–	–	–	–
		140M-F8E-C45	45 A	65 kA	18 kA	–	–	–	–

(1) 54 mm (2.13 in.) and 63 mm (2.48 in.) wide adapters only.

General Data

Table 12 - Main Circuits

Attribute			Value
Rated insulation voltage U_i	IEC, EN	[V]	690
	UL, NEMA, CSA, EEMAC	[V]	600
Rated impulse withstand voltage U_{imp}		[kV]	8
Rated frequency		[Hz]	50...60
Pollution degree			3
Ambient temperature	Operation	[°C (°F)]	-25...+60 (-13...+140)
	Transport and storage	[°C (°F)]	-50...+80 (-58...176)
Protection class	Adapters and busbars		IP00
	Adapters and busbars mounted on plate, connected conductors, and usage of busbar covers		IP20
	Iso adapters with device adapter plate removed, from front		IP20 B (finger proof)
Standards Compliance			• IEC/EN 61439-1 • UL 508[(1)] • CSA C22.2, No 14
Certifications			CE, cULus Recognized

(1) Most components comply with UL 508; there some exceptions. Consult your local Rockwell Automation sales office or Allen-Bradley distributor.

Table 13 - Control Circuits

Attribute			Value
Control Plugs			
Rated insulation voltage U_i	IEC, EN	[V]	250
	UL, NEMA, CSA, EEMAC	[V]	300
Rated impulse withstand voltage U_{imp}		[kV]	4
Rated current at 40 °C ambient temperature I_{th}		[A]	12
Micro Switch			
Rated insulation voltage U_i	IEC, EN	[V]	250
	UL, NEMA, CSA, EEMAC	[V]	300
Rated current • Suitable for switching 100-C contactors		AC coil	250V
		DC coil	120V

Weights

Table 14 - Iso Busbar Adapters

Cat. No.	Weight [g]	Cat. No.	Weight [g]
141A-SM45RS25	402	141A-SM63S	405
141A-SM45S	300	141A-SS45R	279
141A-SM54RS25	418	141A-SS45RR25	381
141A-SM54RS45	494	141A-SS54R	305
141A-SM54S	327	141A-SS54RR25	396
141A-SM63RS45	502	141A-SS54RR45	472
		141A-SS63RR45	480

Table 15 - Standard Busbar Adapters

Cat. No.	Weight [g]	Cat. No.	Weight [g]
141A-CC45R32	198	141A-GM63RS45	400
141A-CC54R63	218	141A-GM45S	211
141A-FM45SS25	293	141A-GM54S	277
141A-FM54SS63	349	141A-GM63S	298
141A-FM63SS63	370	141A-GS45R	200
141A-FM72SS63	408	141A-GS45RR25	302
141A-FM81SS63	429	GS54R	226
141A-FS45S25	272	GS54RR25	347
141A-FS54S63	328	GS54RR45	358
141A-FS63S63	349	141A-GS63RR45	379
141A-FS72S63	387	141A-GS72S	268
141A-FS81S63	408	141A-GS81S	289
141A-GM45RS25	313	141A-GS90M125	781
141A-GM54RS25	368	141A-GS180M125	1021
141A-GM54RS45	379	141A-GS270M125	1271

Table 16 - Standard Busbar Adapters >100 A

Cat. No.	Weight [g]
141A- FL110V250T	1200
141A- FS108V200B	1000
141A- FS108V200T	1000

Table 17 - Mounting Adapters

Cat. No.	Weight [g]	Cat. No.	Weight [g]
141A-WL45RR	211	141A-WM54RR	211
141A-WL45RRP	240	141A-WM54RRP	234
141A-WL54RR	222	141A-WS45RR	163
141A-WL54RRP	251	141A-WS45RRP	180
141A-WM45RR	189	141A-WS54RR	204
141A-WM45RRP	212	141A-WS54RRP	221

Table 18 - Busbar Components

Cat. No.	Weight [g]	Cat. No.	Weight [g]
141A-BCF1	750	141A-ND1	130
141A-BCF1H	40	141A-ND2	220
141A-BCR	800	141A-NDN66	570
141A-BCT1	380	141A-NDRY66	570
141A-BK1	144	141A-NF0102	759
141A-BK180	395	141A-NF1038	760
141A-BK228	425	141A-NFAC00A	124
141A-BK250	440	141A-NFAC1A	107
141A-BKC	420	141A-NFAC2A	109
141A-BKH	90	141A-NFAC3A	156
141A-BKS	150	141A-NFAD	61
141A-BS10	101	141A-NFAFR5	65
141A-BS5	87	141A-NFAR	1
141A-BST48	700	141A-NFASNC0	11
141A-BST76	1050	141A-NFASNC1	11
141A-CBCF1	420	141A-NFASNF	7
141A-CBCF1H	18	141A-NFASNFD	11
141A-CTS3	52	141A-NFD125SB	2190
141A-CTU3	68	141A-NFD160	1300
141A-CVN3150	575	141A-NFD250	3760
141A-CVN350	206	141A-NFD250SB	2460
141A-N160SB	2160	141A-NFD400	5500
141A-N320SB	5650	141A-NFD630	7840
141A-NFHCC30	185	141A-VB75528F	500
141A-NFHCC30L	187	141A-VB76828F	630
141A-NFJ100	3280	141A-VC3A	185
141A-NFJ200	4500	141A-VC3B	251
141A-NFJ400	6900	141A-VC3C	565
141A-NFVF1150	116	141A-VC3D	870
141A-NFVF2240	199	141A-VC5E	494
141A-NFVF3300	247	141A-VC5F	943
141A-PS105	172	141A-VC5G	1461
141A-PS145	196	141A-VN3120	485
141A-PS200	218	141A-VN3185	1140
141A-T11	158	141A-VN3300F	1619
141A-T13	591	141A-VN3300R	1540
141A-T13E	20	141A-VN370	360
141A-TR1	59	141A-VS116	21
141A-TR3	203	141A-VS135	46
141A-TR3E	21	141A-VS170	71
141A-TR3F16	285	141A-VS2120	109
141A-TR4	256	141A-VS216	23
141A-TR4E	28	141A-VS235	47
141A-TS3	131	141A-VS270	74
141A-TU3	127	141A-VU3300F	1325
141A-VB710528F	840	141A-VU3300R	1550

Table 19 - Accessories

Cat. No.	Weight [g]	Cat. No.	Weight [g]
141A-AHR45	15	141A-APC8	29
141A-AHR54	16	141A-APH	5
141A-AHR63	16	141A-AS	75
141A-AHS72	17	141A-AS9B	20
141A-AHS81	18	141A-AS9S	38
141A-AK	1	141A-AS9W	20
141A-APC10	35	141A-CAS9B	20
141A-APC12	40	141A-FTS63	8

Approximate Dimensions

Busbar Adapters

Dimensions are in millimeters (inches). Dimensions are not intended for manufacturing purposes.

Figure 19 - ISO Busbar Adapters

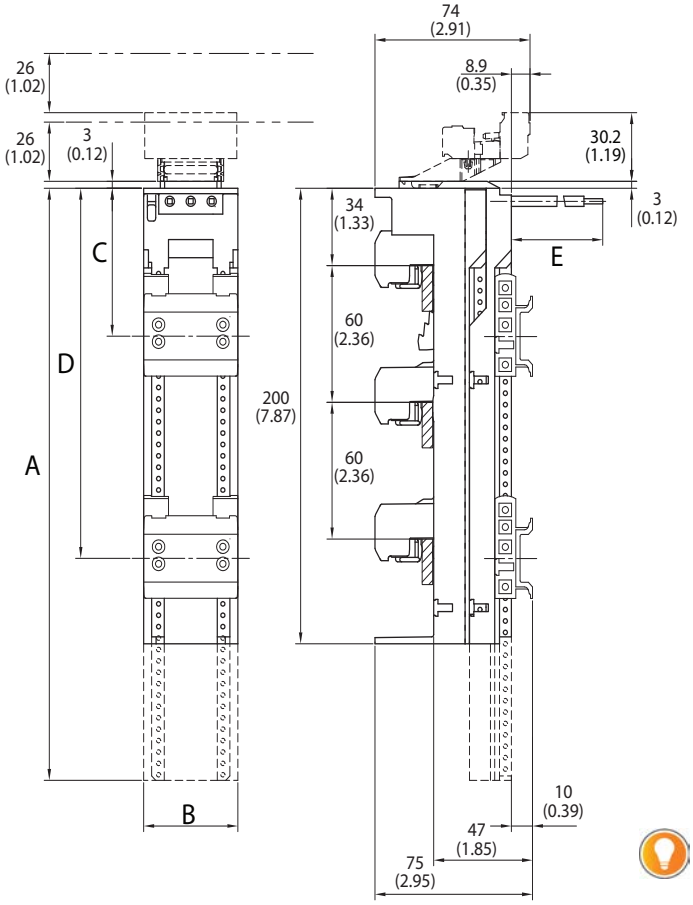

Free space is required to get the device adapter placed into the parking position

Cat. No.	A	B	C	D	E
141A-SS45RR25	200 (7.87)	45 (1.77)	65 (2.56)	162.5 (6.4)	73 (2.87)
141A-SS54RR25	200 (7.87)	54 (2.13)	65 (2.56)	162.5 (6.4)	73 (2.87)
141A-SS54RR45	200 (7.87)	54 (2.13)	65 (2.56)	170 (6.69)	95 (3.74)
141A-SS63RR45	200 (7.87)	63 (2.48)	65 (2.56)	170 (6.69)	95 (3.74)
141A-SS45R	200 (7.87)	45 (1.77)	–	162.5 (6.4)	–
141A-SS54R	200 (7.87)	54 (2.13)	–	170 (6.69)	–

Cat. No.	A	B	C	D	E
141A-SM45RS25	260 (10.24)	45 (1.77)	65 (2.56)	170 (6.69)	73 (2.87)
141A-SM54RS25	260 (10.24)	54 (2.13)	65 (2.56)	170 (6.69)	73 (2.87)
141A-SM54RS45	260 (10.24)	54 (2.13)	65 (2.56)	170 (6.69)	95 (3.74)
141A-SM63RS45	260 (10.24)	63 (2.48)	65 (2.56)	170 (6.69)	95 (3.74)
141A-SM45S	260 (10.24)	45 (1.77)	–	170 (6.69)	–
141A-SM54S	260 (10.24)	54 (2.13)	–	170 (6.69)	–
141A-SM63S	260 (10.24)	63 (2.48)	–	170 (6.69)	–

Figure 20 - Standard Busbar Adapters

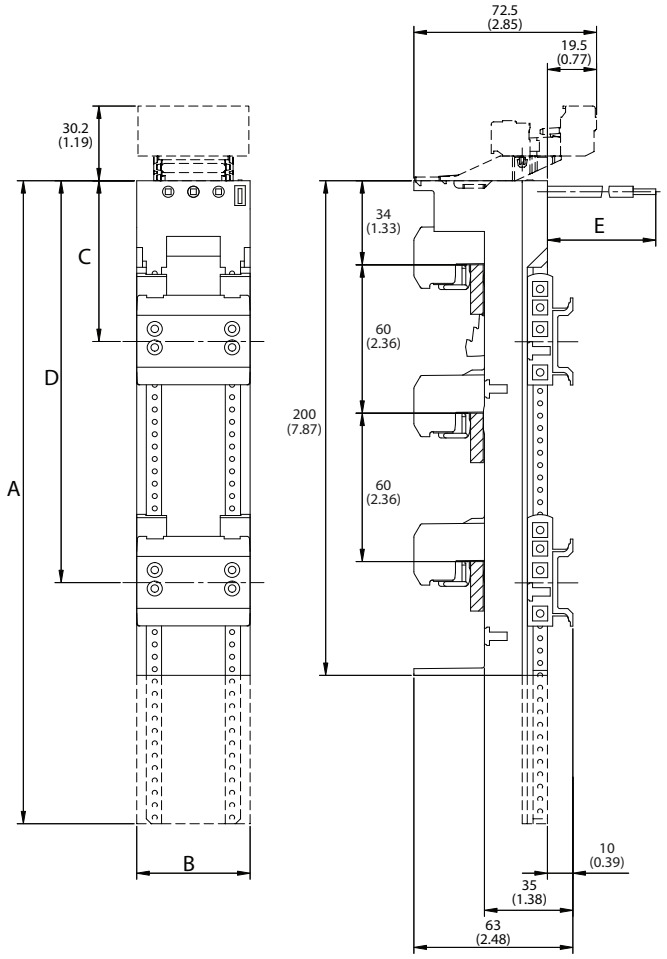

Cat. No.	A	B	C	D	E
141A-GM45RS25	260 (10.24)	45 (1.77)	65 (2.56)	170 (6.69)	73 (2.87)
141A-GM54RS25	260 (10.24)	54 (2.13)	65 (2.56)	170 (6.69)	73 (2.87)
141A-GM54RS45	260 (10.24)	54 (2.13)	65 (2.56)	170 (6.69)	95 (3.74)
141A-GM63RS45	260 (10.24)	63 (2.48)	65 (2.56)	170 (6.69)	95 (3.74)
141A-GM45S	260 (10.24)	45 (1.77)	–	170 (6.69)	–
141A-GM54S	260 (10.24)	54 (2.13)	–	170 (6.69)	–
141A-GM63S	260 (10.24)	63 (2.48)	–	170 (6.69)	–
141A-GS45RR16	200 (7.87)	45 (1.77)	65 (2.56)	162.5 (6.4)	73 (2.87)
141A-GS54RR16	200 (7.87)	54 (2.13)	65 (2.56)	162.5 (6.4)	73 (2.87)
141A-GS45RR25	200 (7.87)	45 (1.77)	65 (2.56)	162.5 (6.4)	73 (2.87)
141A-GS54RR25	200 (7.87)	54 (2.13)	65 (2.56)	162.5 (6.4)	73 (2.87)
141A-GS54RR45	200 (7.87)	54 (2.13)	65 (2.56)	170 (6.69)	95 (3.74)
141A-GS63RR45	200 (7.87)	63 (2.48)	65 (2.56)	170 (6.69)	95 (3.74)
141A-GS45R	200 (7.87)	45 (1.77)	–	162.5 (6.4)	–
141A-GS54R	200 (7.87)	54 (2.13)	–	170 (6.69)	–
141A-GS72S	200 (7.87)	72 (2.83)	105 (4.13)	–	–
141A-GS81S	200 (7.87)	81 (3.19)	105 (4.13)	–	–

Free space is required to plug/unplug the adapter into the busbars

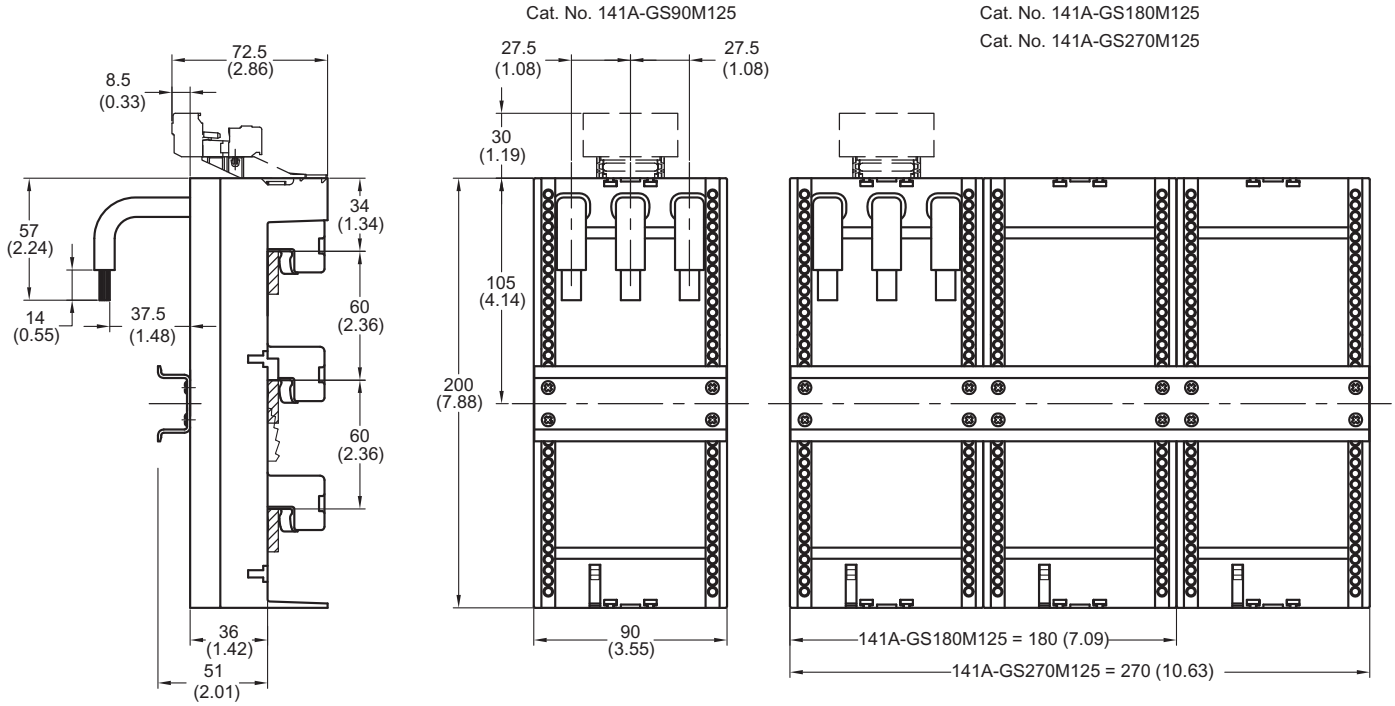

Figure 21 - Standard Busbar Adapters with Terminals

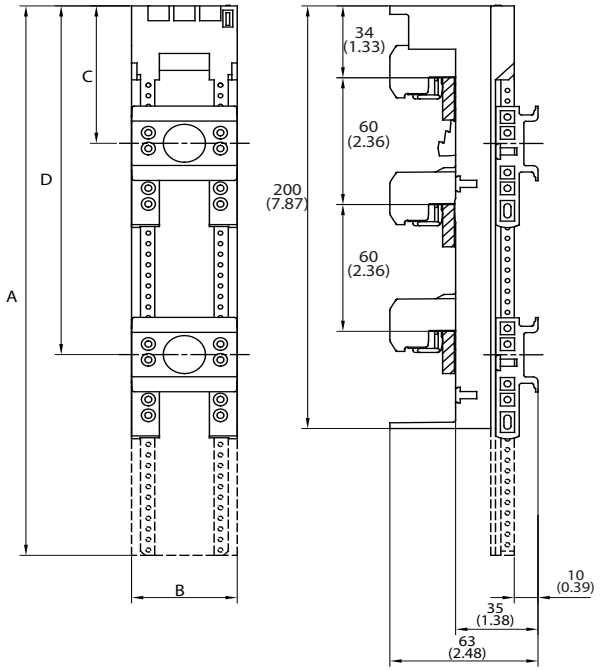

Cat. No.	A	B	C	D	Wire Size	
					mm^2	AWG
141A-FS45S25	200 (7.87)	45 (1.77)	65 (2.56)	–	6	10
141A-FS54S63	200 (7.87)	54 (2.13)	65 (2.56)	–	16	6
141A-FS63S63	200 (7.87)	63 (2.48)	65 (2.56)	–	16	6
141A-FS72S63	200 (7.87)	72 (2.83)	65 (2.56)	–	16	6
141A-FS81S63	200 (7.87)	81 (3.19)	65 (2.56)	–	16	6
141A-FM45SS25	260 (10.24)	45 (1.77)	65 (2.56)	170 (6.69)	6	10
141A-FM54SS63	260 (10.24)	54 (2.13)	65 (2.56)	170 (6.69)	16	6
141A-FM63SS63	260 (10.24)	63 (2.48)	65 (2.56)	170 (6.69)	16	6
141A-FM72SS63	260 (10.24)	72 (2.83)	65 (2.56)	170 (6.69)	16	6
141A-FM81SS63	260 (10.24)	81 (3.19)	65 (2.56)	170 (6.69)	16	6

Free space is required to plug/unplug the adapter into the busbars

Figure 22 - Standard Busbar Adapters – Universal Adapters

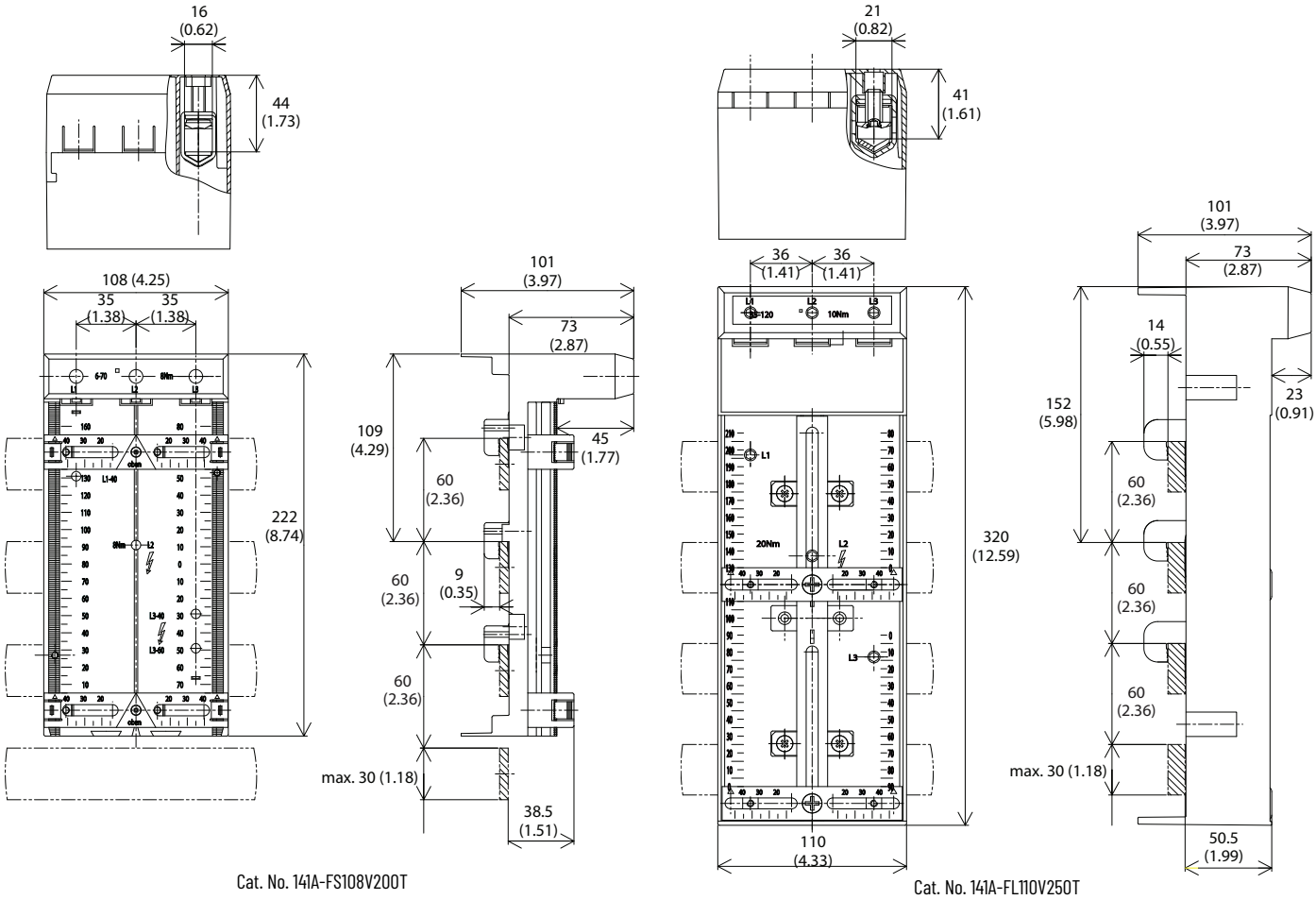

Figure 23 - Cat. Nos. 141A-GHT, -GHB

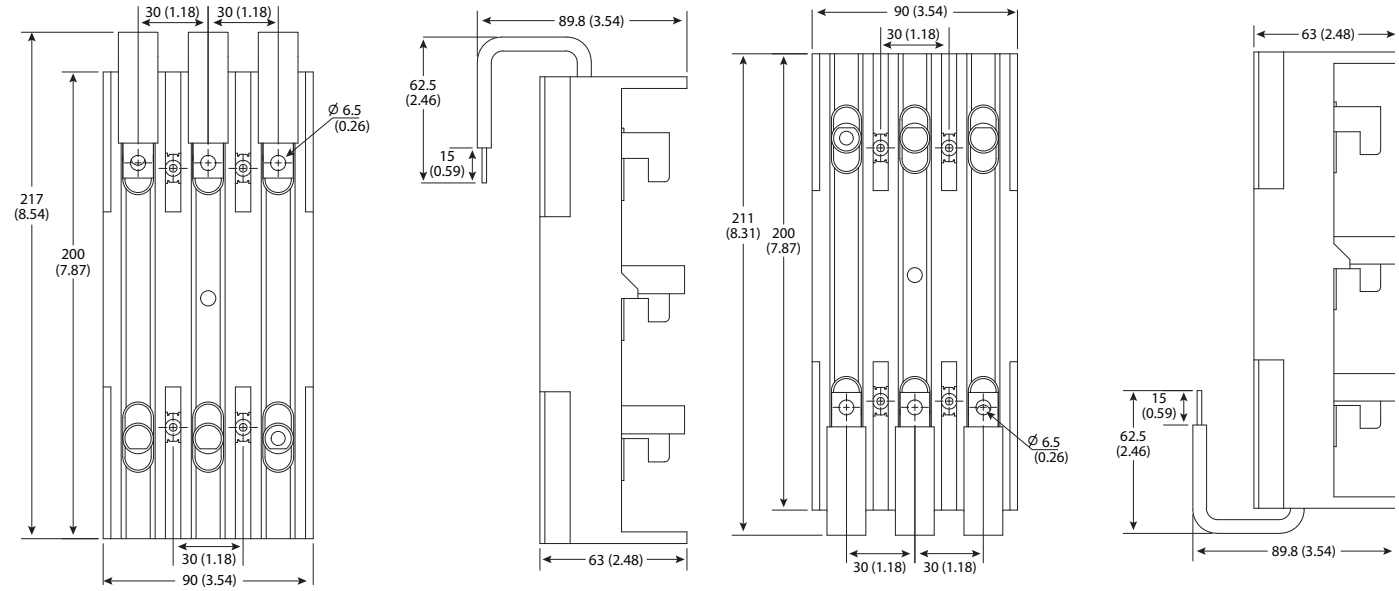

141A-GHT (Top Connection)

141A-GHB (Bottom Connection)

Figure 24 - Cat. Nos. 141A-GJT, -GJB

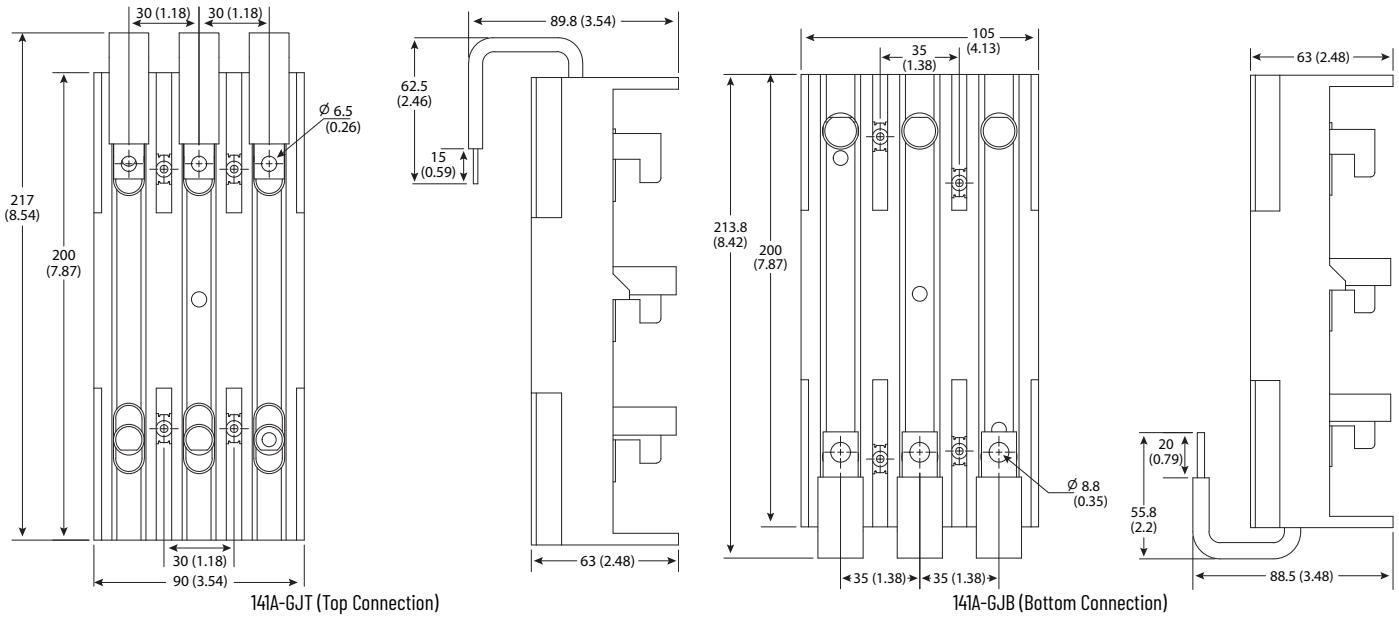

141A-GJT (Top Connection)

141A-GJB (Bottom Connection)

Figure 25 - Cat. No. 141A-GKU

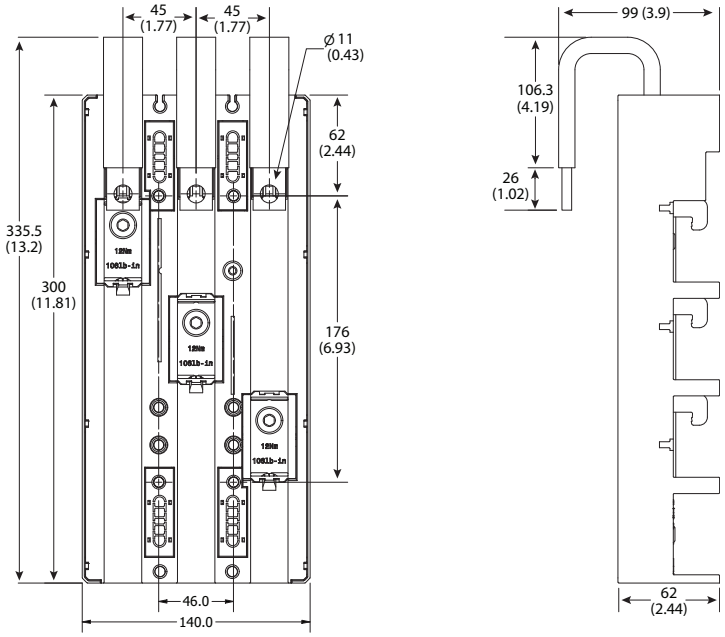

Figure 26 - Cat. No. 141A-GMU

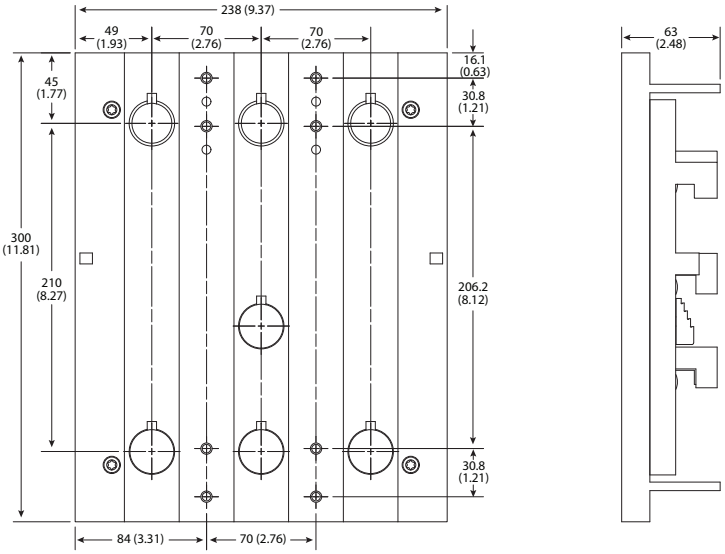

Figure 27 - Cat. No. 141A-W... Panel Mount Adapters

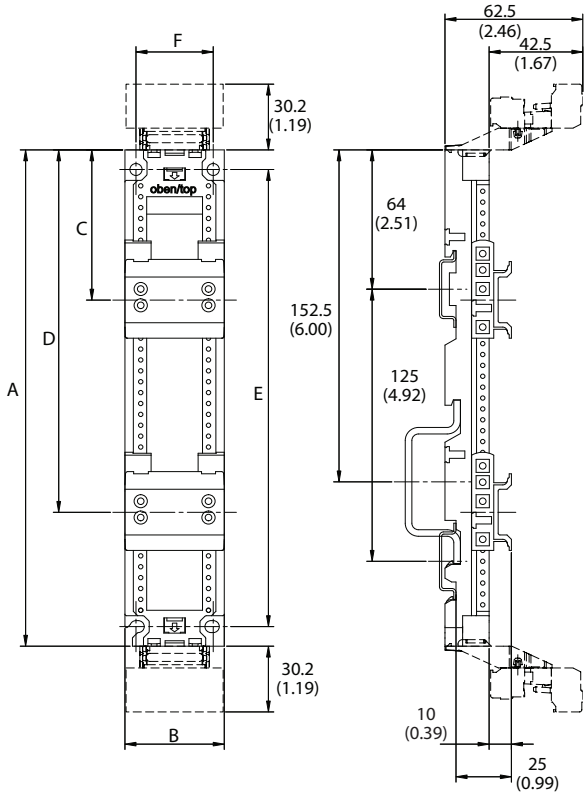

Cat. No.	A	B	C	D	E	F
141A-WS45RR	228 (8.97)	45 (1.77)	69 (2.71)	166.5 (6.56)	210 (8.27)	35 (1.38)
141A-WS54RR	228 (8.97)	54 (2.13)	69 (2.71)	174 (6.85)	210 (8.27)	40 (1.57)
141A-WM45RR	228 (8.97)	45 (1.77)	69 (2.71)	166.5 (6.56)	265 (10.43)	35 (1.38)
141A-WM54RR	228 (8.97)	54 (2.13)	69 (2.71)	174 (6.85)	265 (10.43)	40 (1.57)
141A-WL54RR	333 (13.11)	54 (2.13)	69 (2.71)	174 (6.85)	315 (12.40)	40 (1.57)

UL Fuse Bases and Fuse Holders

Figure 28 - Cat. No. 141A-NFHCC30

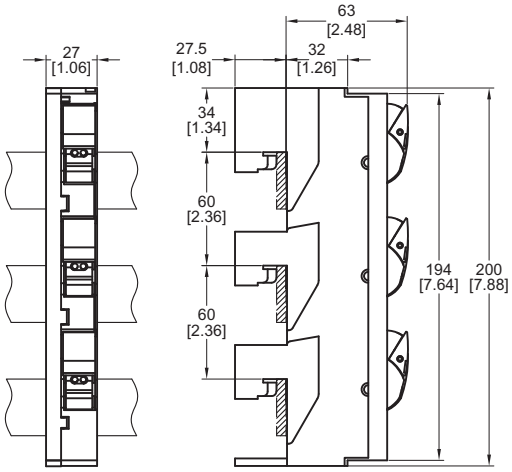

Figure 29 - Cat. Nos. 141A-NFJ30C, -60C, and -100C

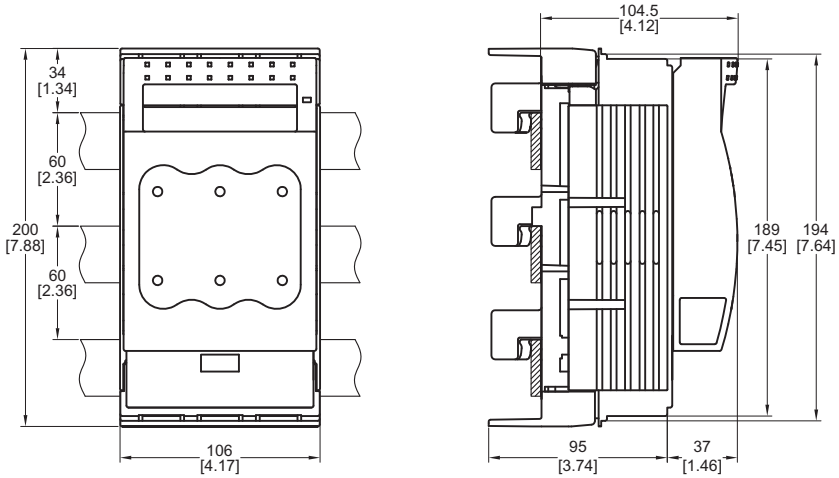

Figure 30 - Cat. No. 141A-NFJ200C

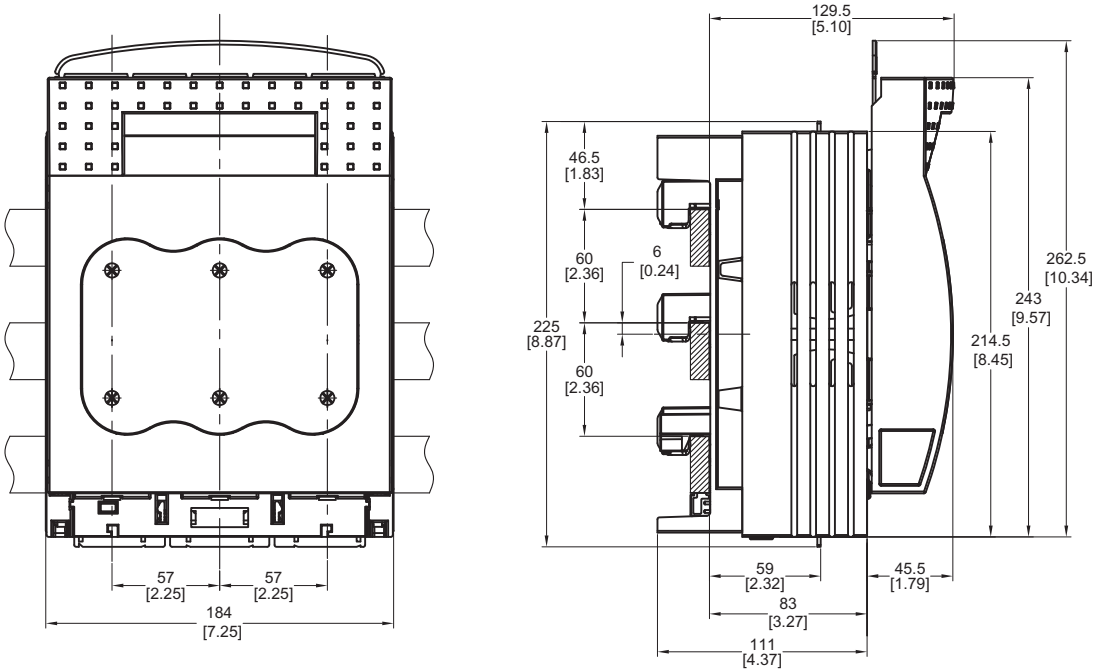

Figure 31 - Cat. No. 141A-NFJ400

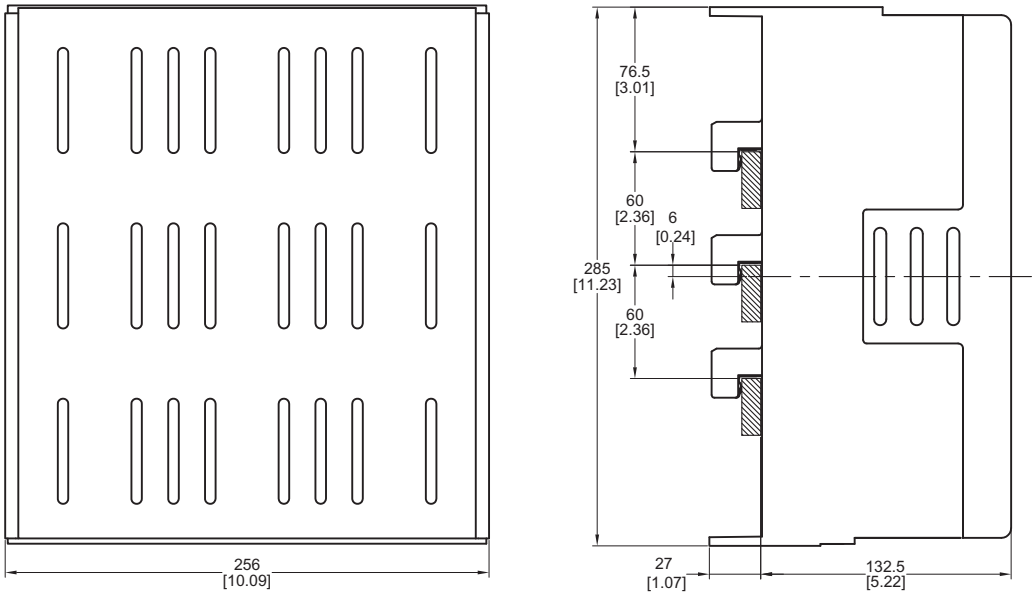

Fused and Non-fused IEC Switch Disconnectors

Figure 32 - 141A-NF0102 and 141A-NF1038 Busbar Fuse Switches

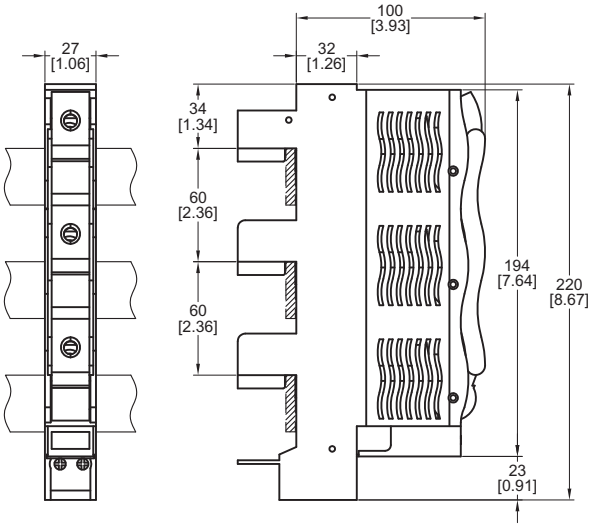

Figure 33 - 141A-NFD160 NH Fuse Switch Disconnector

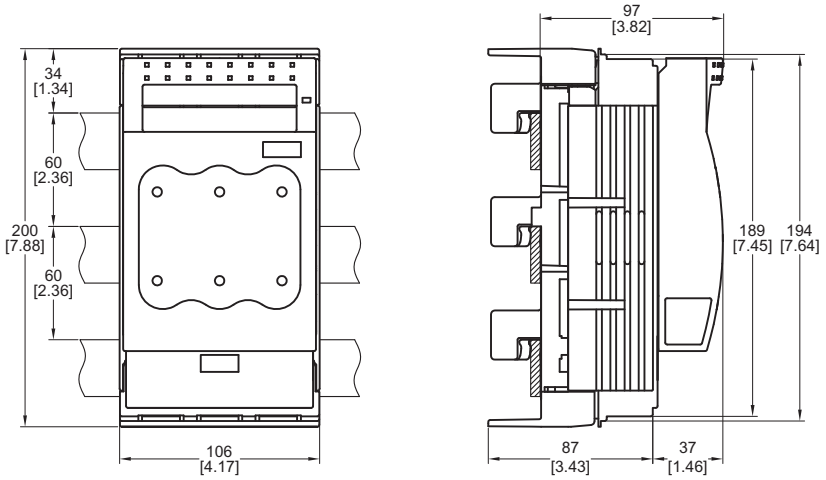

Figure 34 - 141A-NFD... NH Fuse Switch Disconnector

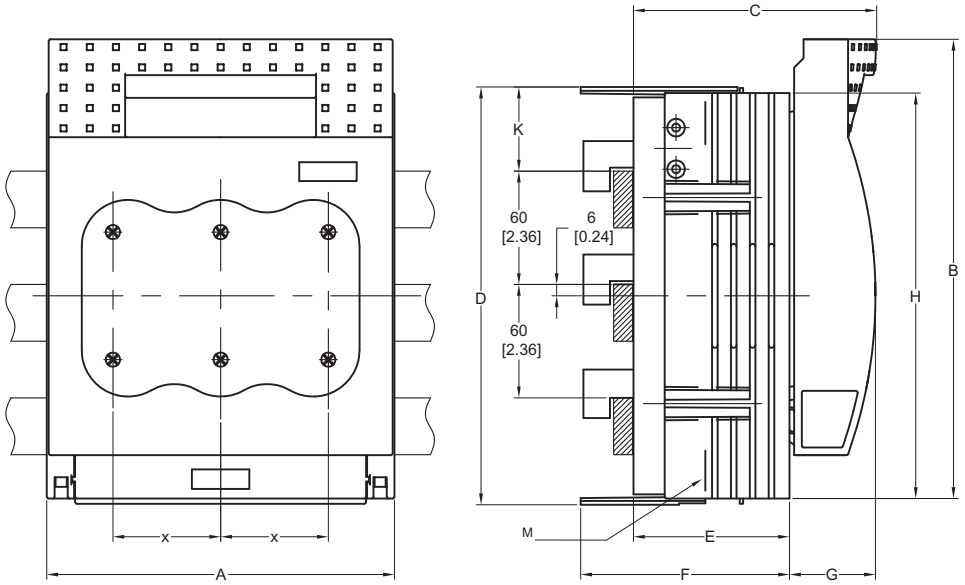

Cat. No.	A	B	C	D	E	F	G	H	K	M	X
141A-NFD250	184 (7.24)	243 (9.57)	128.5 (5.06)	221 (8.7)	83 (3.27)	110.5 (4.35)	45.5 (1.79)	214.5 (8.44)	44.5 (1.75)	M10	57 (2.24)
141A-NFD400	210 (8.27)	288 (11.34)	145 (5.71)	268 (10.55)	97 (3.82)	124.5 (4.9)	48 (1.89)	255 (10.04)	68 (2.68)	M10	65 (2.56)
141A-NFD630	256 (10.08)	300 (11.81)	159.5 (6.28)	285 (11.22)	111.5 (4.39)	139 (5.47)	48 (1.89)	267 (10.51)	76.5 (3.01)	M12	81 (3.19)

Figure 35 - Cat. No.141A-NFD125SB Fuse Switch Disconnector for NH Fuses

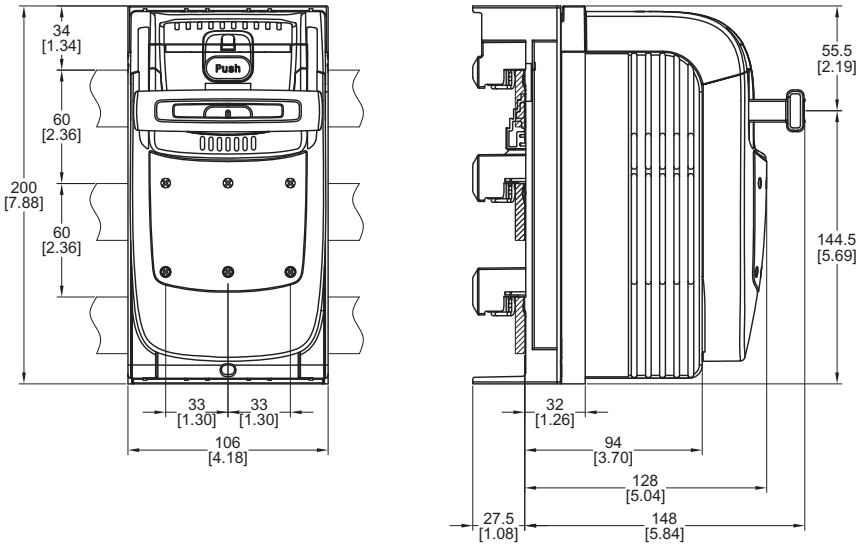

Figure 36 - Cat. No.141A-NFD250SB Fuse Switch Disconnector for NH Fuses

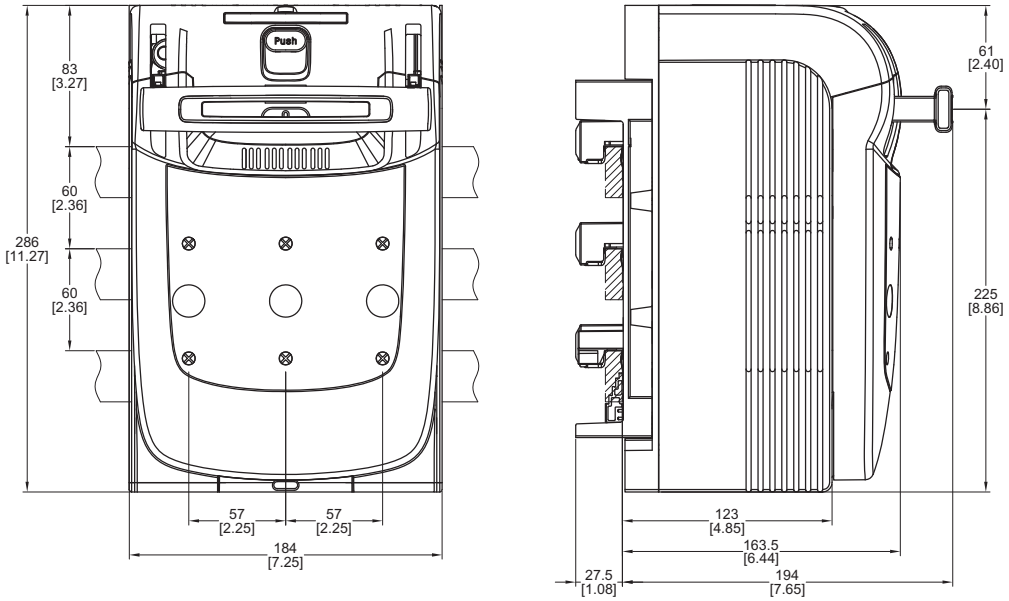

Figure 37 - 141A-N160SB Non-Fused Switch Disconnector for External Rotary Operating Handle

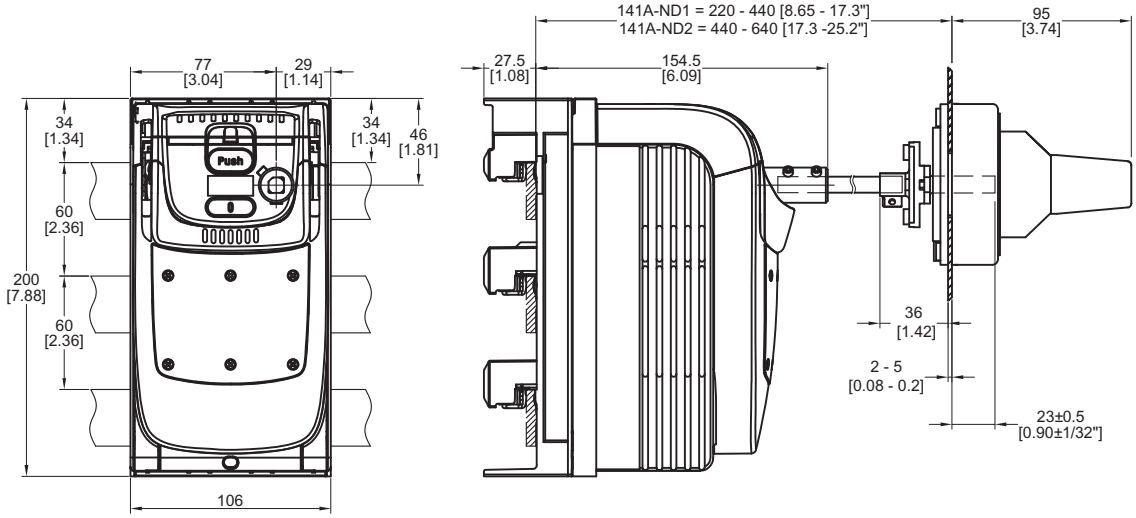

Figure 38 - 141A-N320SB Non-Fused Switch Disconnector for External Rotary Operating Handle

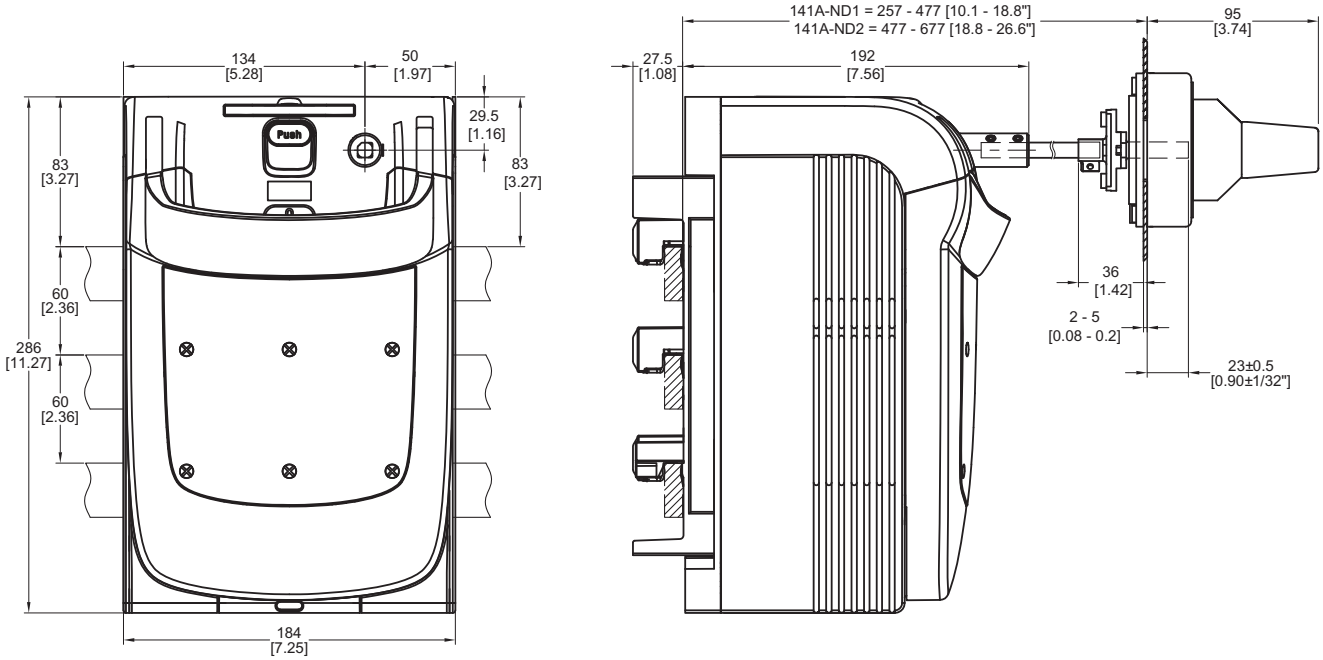

Figure 39 - 141A-NDN66 and 141A-NDRY66 Operating Handles

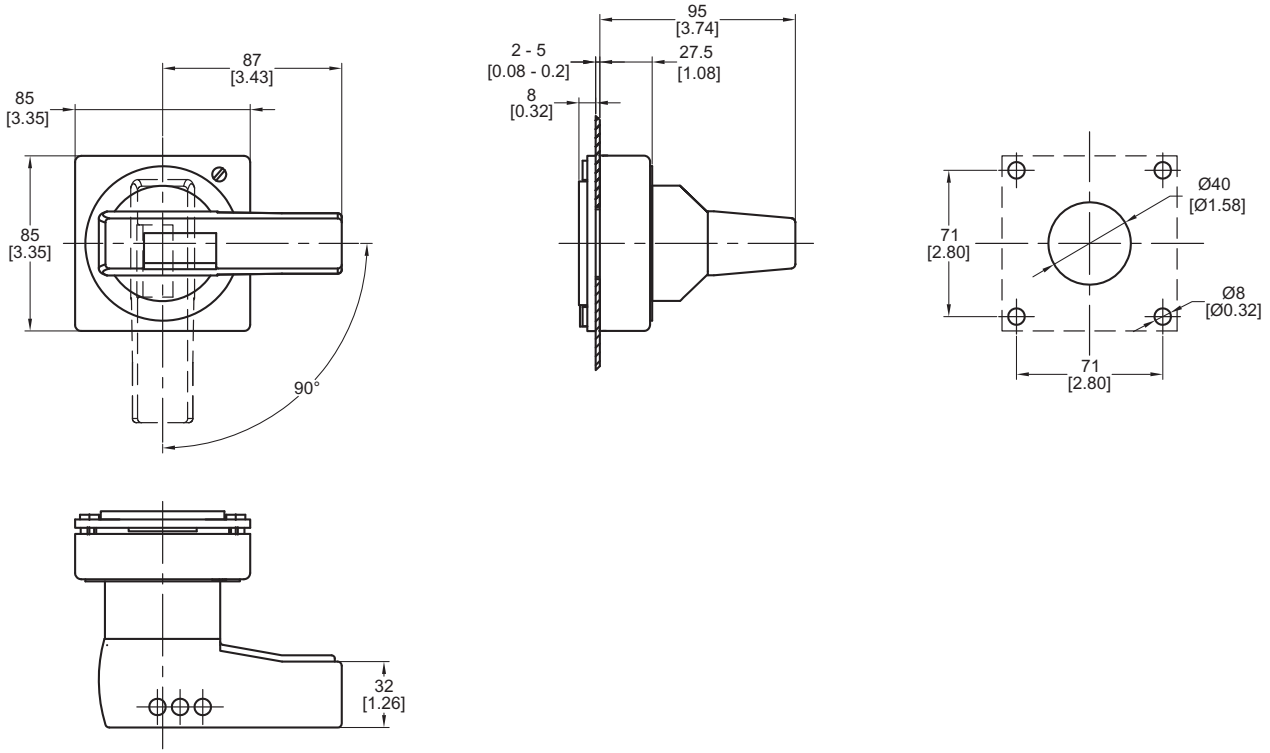

Busbar Rack Components

Figure 40 - Cat. Nos. 141A-TU3, -TR1, -TR3, and -TR4 Busbar Supports and End Covers

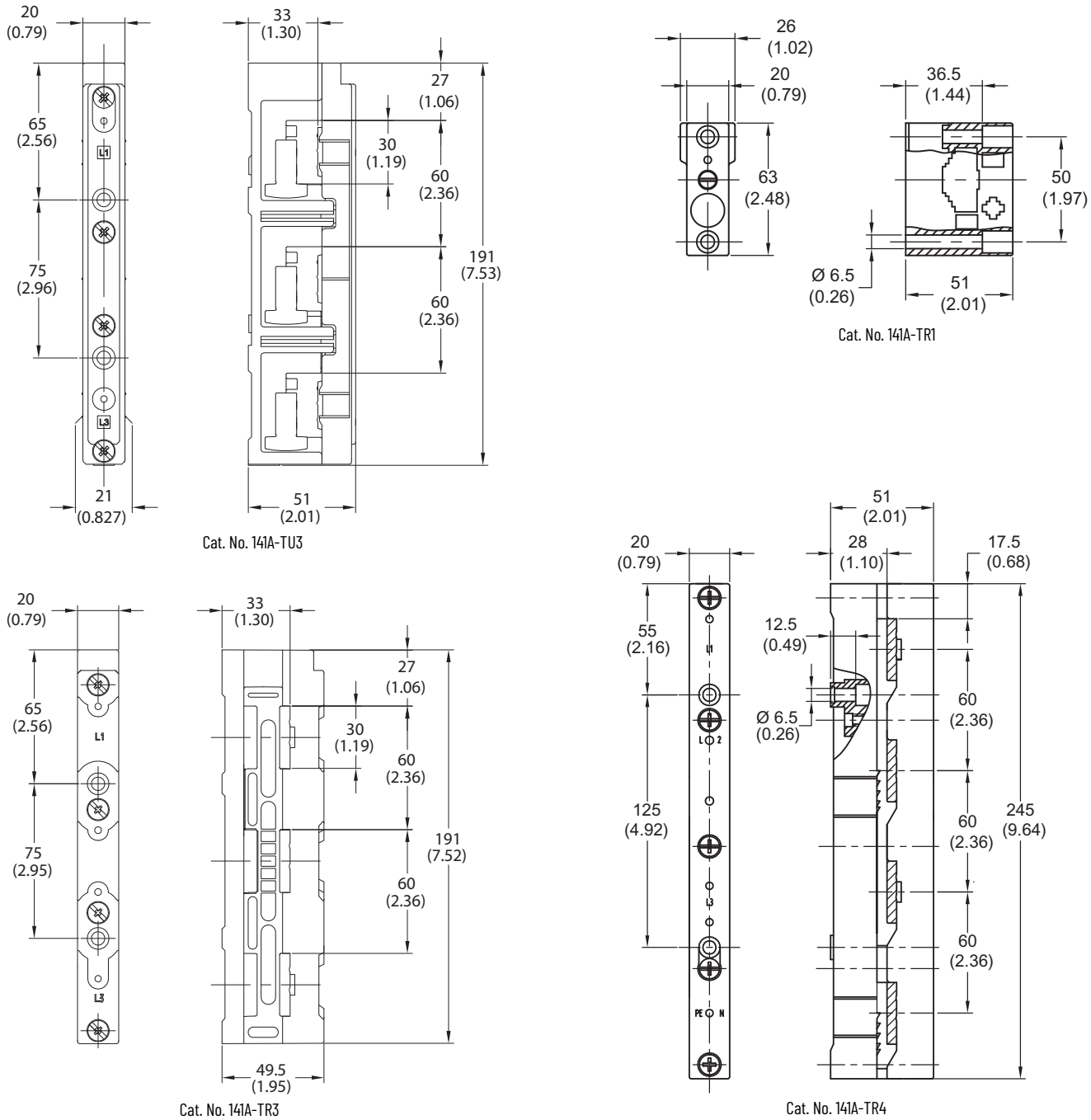

Figure 41 - Cat. Nos. 141A-TR3F16, -T13, -TR3E, -TR4E, and T13E Busbar Supports and End Covers

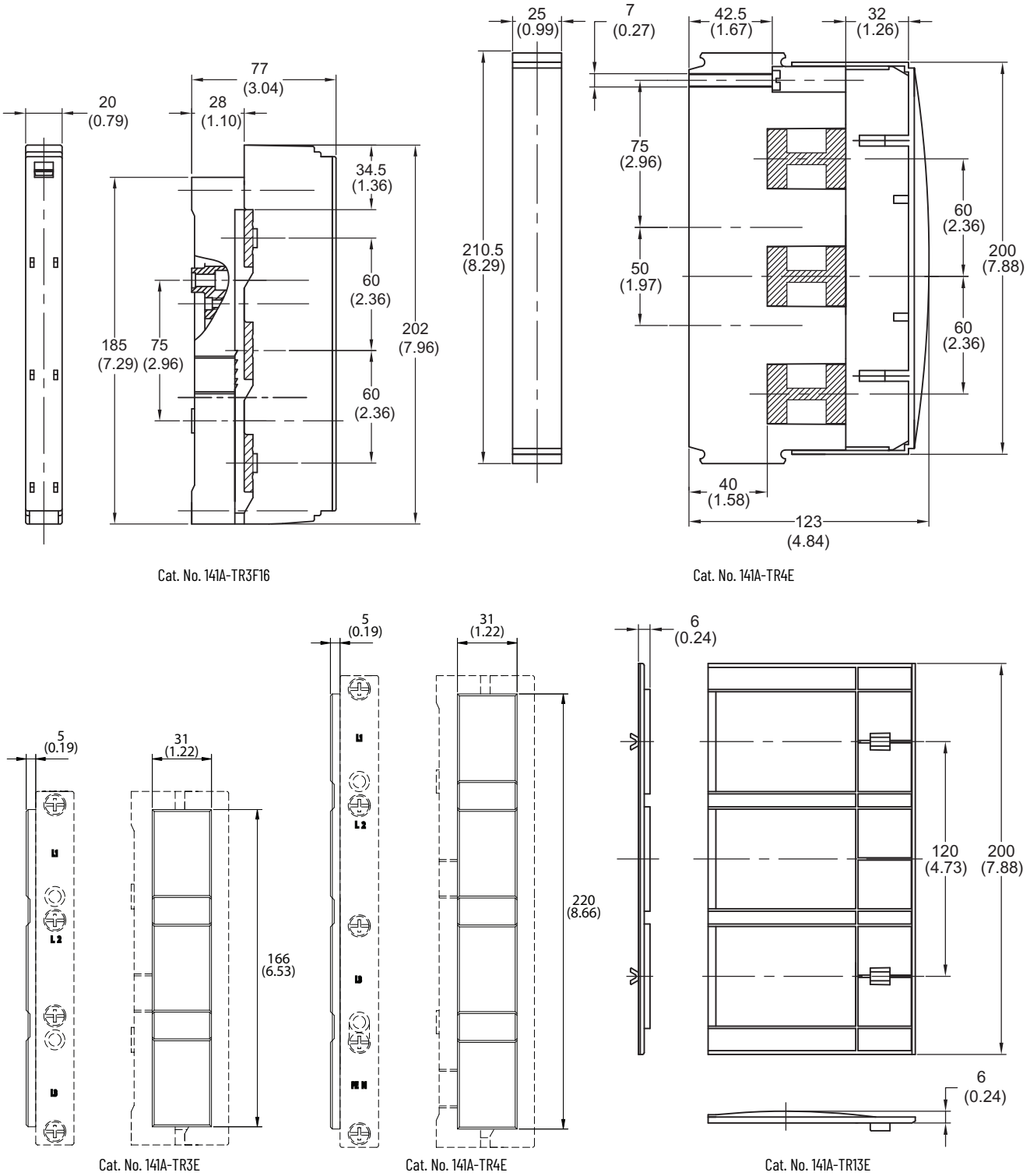

Supply Modules

Dimensions are in millimeters (inches). Dimensions are not intended for manufacturing purposes.

Figure 42 - Cat. Nos. 141A-VN370 and 141A-VN3120

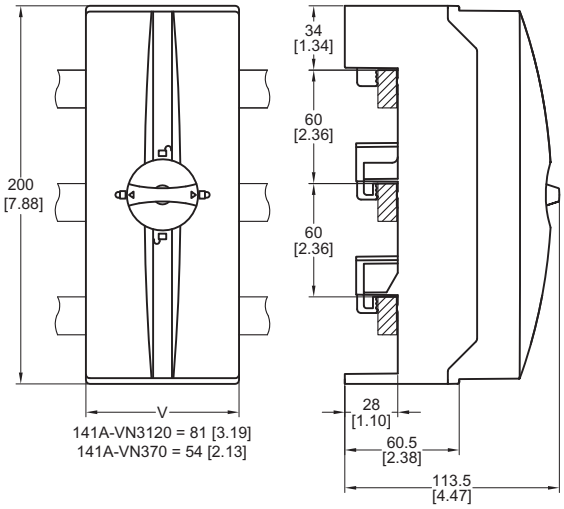

Figure 43 - Cat. Nos. 141A-VN3185, -VN3300R, and -VN3300F

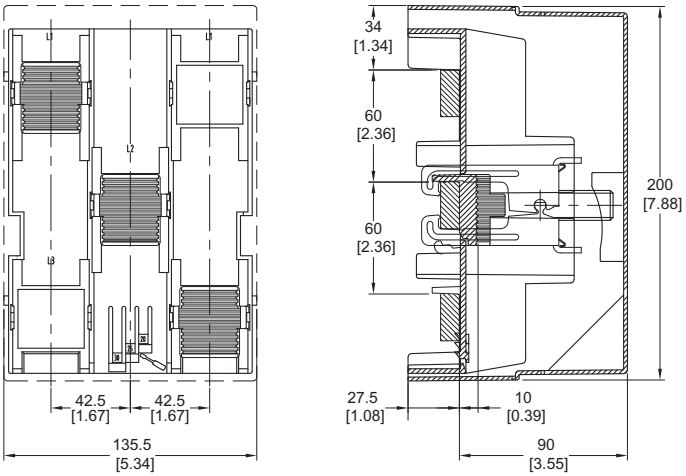

Figure 44 - Cat. Nos. 141A-VU3300R and -VU3300F

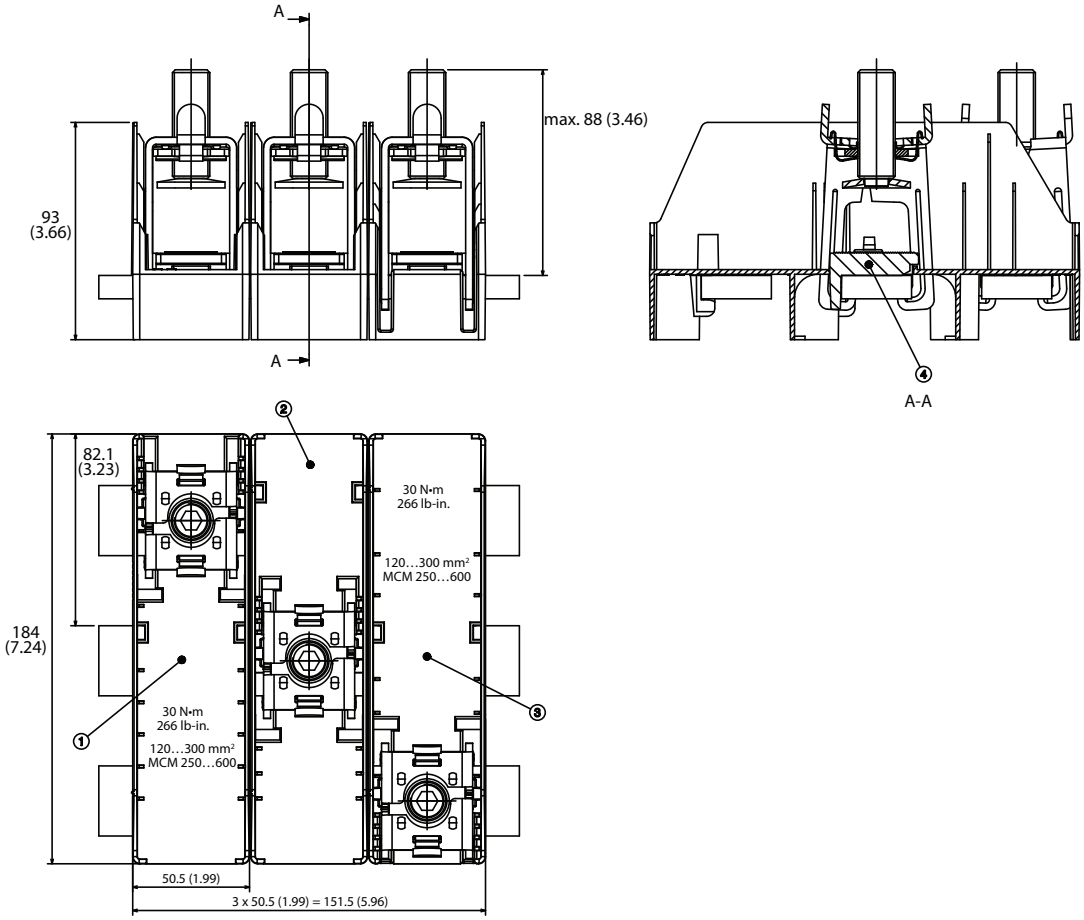

Terminals and Terminal Covers

Figure 45 - 141A-VS... Terminals for Connecting to Busbars

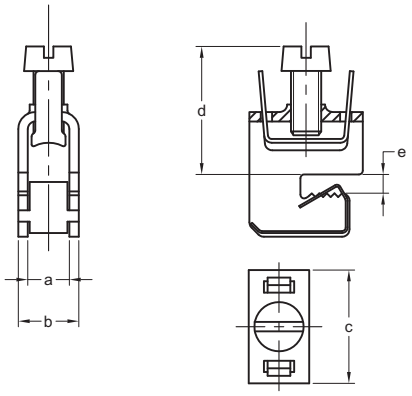

Cat. No.	A	B	C	D	E
141A-VS2120	17 (0.67)	23.5 (0.93)	36 (1.42)	55 (2.17)	10 (0.39)
141A-VS116	7.5 (0.3)	11.5 (0.45)	22.5 (0.89)	25 (0.98)	5 (0.2)
141A-VS135	10.5 (0.41)	15.5 (0.61)	29 (1.14)	36 (1.42)	5 (0.2)
141A-VS170	14.5 (0.57)	20.5 (0.81)	32 (1.26)	42 (1.65)	5 (0.2)
141A-VS216	7.5 (0.3)	11.5 (0.45)	22.5 (0.89)	25 (0.98)	10 (0.39)
141A-VS235	10.5 (0.41)	15.5 (0.61)	29 (1.14)	35 (1.38)	10 (0.39)
141A-VS270	14.5 (0.57)	20.5 (0.81)	32 (1.26)	42 (1.65)	10 (0.39)

Figure 46 - 141A-VB... Terminals for Connecting to Busbars

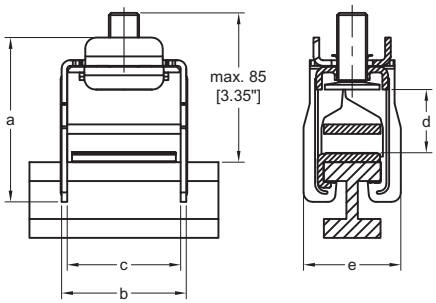

Cat. No.	A	B	C	D Min	D Max	E
141A-VB75528F	90 (3.54)	72 (2.83)	55 (2.17)	10 (0.39)	28 (1.1)	56 (2.2)
141A-VB76828F	90 (3.54)	85 (3.35)	68 (2.68)	10 (0.39)	28 (1.1)	56 (2.2)
141A-VB710528F	90 (3.54)	122 (4.8)	105 (4.13)	10 (0.39)	28 (1.1)	56 (2.2)

Figure 47 - 141A-BK1 Terminal Cover

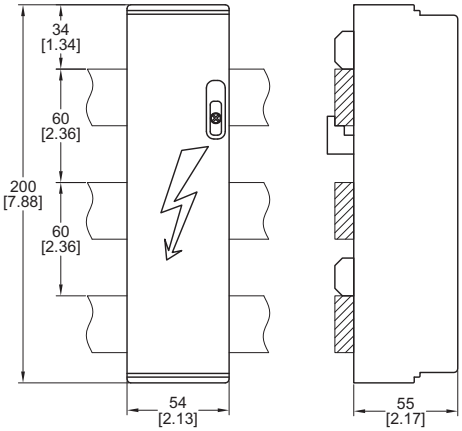

Figure 48 - 141A-BK180, -BK228 Terminal Covers

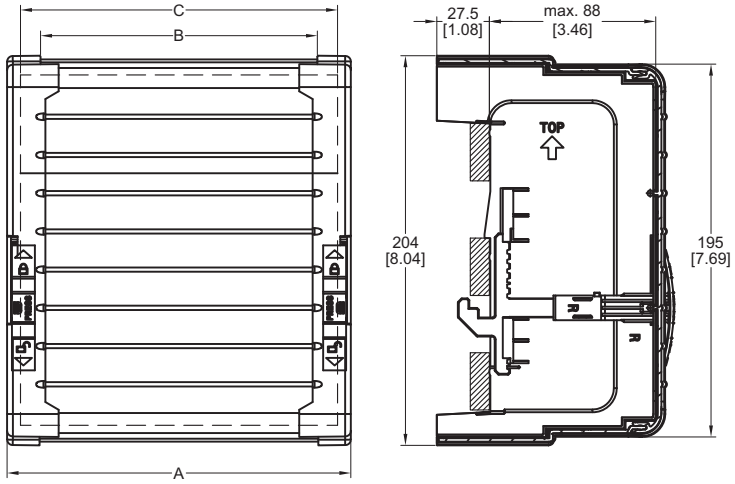

Cat. No.	A(1)	B	C
141A-BK180	180 (7.09)	146 (5.75)	166 (6.54)
141A-BK228	228 (8.98)	194 (7.64)	214 (8.43)

(1) You can build terminal covers of individual lengths by using components 141A-BKH, 141A-BKC 141A-BKC, and 141A-BKS.

Busbar Covers and Shrouds

Figure 49 - Cat. Nos. 141A-BCF1, 141A-BCF1H Busbar Cover and Cover Holder

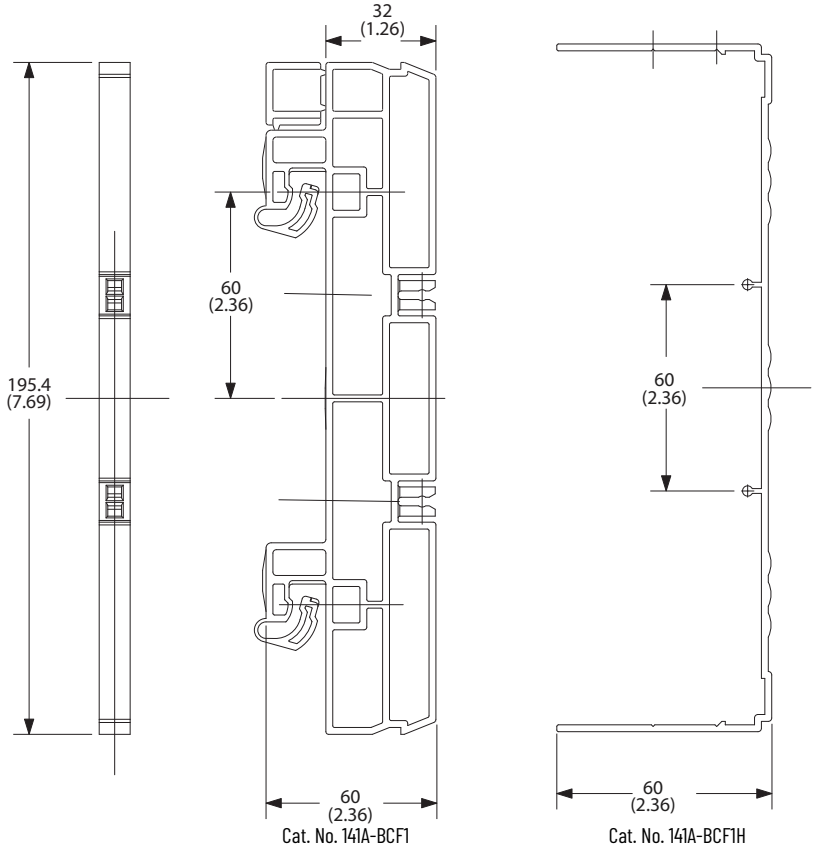

Additional Resources

These documents contain additional information concerning related products from Rockwell Automation.

Resource	Description
IEC Contactor Specifications, publication 100-TD013	Provides product selection, accessory, and specifications information for IEC contactors.
UL Standards Listing for Industrial Control Products, publication CMPNTS-SR002	Assists original equipment manufacturers (OEMs) with construction of panels, to help ensure that they conform to the requirements of Underwriters Laboratories.
American Standards, Configurations, and Ratings: Introduction to Motor Circuit Design, publication IC-AT001	Provides an overview of American motor circuit design based on methods that are outlined in the NEC.
Industrial Components Preventive Maintenance, Enclosures, and Contact Ratings Specifications, publication IC-TD002	Provides a quick reference tool for Allen-Bradley industrial automation controls and assemblies.
Safety Guidelines for the Application, Installation, and Maintenance of Solid-state Control, publication SGI-1.1	Designed to harmonize with NEMA Standards Publication No. ICS 1.1-1987 and provides general guidelines for the application, installation, and maintenance of solid-state control in the form of individual devices or packaged assemblies incorporating solid-state components.
Industrial Automation Wiring and Grounding Guidelines, publication 1770-4.1	Provides general guidelines for installing a Rockwell Automation industrial system.
Product Certifications website, rok.auto/certifications.	Provides declarations of conformity, certificates, and other certification details.

You can view or download publications at rok.auto/literature.

Rockwell Automation Support

Use these resources to access support information.

Technical Support Center	Find help with how-to videos, FAQs, chat, user forums, and product notification updates.	rok.auto/support
Knowledgebase	Access Knowledgebase articles.	rok.auto/knowledgebase
Local Technical Support Phone Numbers	Locate the telephone number for your country.	rok.auto/phonesupport
Literature Library	Find installation instructions, manuals, brochures, and technical data publications.	rok.auto/literature
Product Compatibility and Download Center (PCDC)	Download firmware, associated files (such as AOP, EDS, and DTM), and access product release notes.	rok.auto/pcdc

Documentation Feedback

Your comments help us serve your documentation needs better. If you have any suggestions on how to improve our content, complete the form at rok.auto/docfeedback.

Allen-Bradley, E1 Plus, E3, E300, expanding human possibility, FactoryTalk, PowerFlex, and Rockwell Automation are trademarks of Rockwell Automation, Inc.
Crossboard is a registered trademark of Wöhner GmbH & Co. KG.
Trademarks not belonging to Rockwell Automation are property of their respective companies.

Rockwell Automation maintains current product environmental compliance information on its website at rok.auto/pec.

Rockwell Otomasyon Ticaret A.Ş. Kar Plaza İş Merkezi E Blok Kat:6 34752, İçerenköy, İstanbul, Tel: +90 (216) 5698400 EEE Yönetmeliğine Uygundur

Connect with us.

rockwellautomation.com — expanding **human possibility**™

AMERICAS: Rockwell Automation, 1201 South Second Street, Milwaukee, WI 53204-2496 USA, Tel: (1) 414.382.2000, Fax: (1) 414.382.4444
EUROPE/MIDDLE EAST/AFRICA: Rockwell Automation NV, Pegasus Park, De Kleetlaan 12a, 1831 Diegem, Belgium, Tel: (32) 2 663 0600, Fax: (32) 2 663 0640
ASIA PACIFIC: Rockwell Automation, Level 14, Core F, Cyberport 3, 100 Cyberport Road, Hong Kong, Tel: (852) 2887 4788, Fax: (852) 2508 1846

Publication 141-TD001B-EN-P - December 2021
Supersedes publication 141-TD001A-EN-P - April 2021

Copyright © 2021 Rockwell Automation, Inc. All rights reserved. Printed in the U.S.A.