Installation Instructions

Original Instructions

PowerFlex 700S Adjustable Frequency Drive - Phase II Control

Frames 1…6

0.75…132 kW (1…200 Hp)

Introduction

This document explains the 5 primary steps for mechanical installation and for connecting incoming power, the motor, and basic I/O to the PowerFlex® 700S adjustable frequency AC drive with Phase II control.

The information provided is intended for qualified installers only.

The Additional Resources section on page 2 is a directory of Rockwell Automation publications that provide detailed drive information from wiring and grounding recommendations to troubleshooting and repair.

ATTENTION: This product contains a 3V Lithium battery if the DriveLogix™ Controller option board is installed. Perchlorate Material - special handling may apply. See www.dtsc.ca.gov/hazardouswaste/perchlorate.

To order paper copies of documentation, contact your local Allen-Bradley® distributor or Rockwell Automation® sales representative.

To find your local Rockwell Automation distributor or sales representative, visit http://www.rockwellautomation.com/locations.

For information, such as firmware updates or answers to drive-related questions, go to the Drives Service & Support website at http://www.ab.com/support/abdrives and click the Downloads or Knowledgebase link.

Table of Contents

Topic	Page
Table of Contents	2
Summary of Changes	2
Additional Resources	2
Step 1: Read the General Precautions	3
Step 2: Prepare for Installation	5
Step 3: Lift and Mount the Drive	19
Step 4: Power Wiring	22
Step 5: Control and I/O Wiring	46
Control and I/O Wiring Recommendations	47

Additional Resources

These documents contain additional information concerning related products from Rockwell Automation.

Resource	Description
PowerFlex 700S Drives with Phase II Control Programming Manual, publication 20D-PM001	Provides the following detailed information: • Drive start-up instructions • Parameters and programming • Faults, alarms, and troubleshooting • Human Interface Module (HIM) Operation Instructions
PowerFlex 7-Class HIM (DPI) Quick Reference, publication 20HIM-QR001	Provides a quick reference guide for using the PowerFlex 7-Class HIM.
PowerFlex 700S Drives with Phase II Control Reference Manual, publication PFLEX-RM003	Provides detailed control functions and application programming examples.
DriveLogix5730 Controller for PowerFlex 700S Drives with Phase II Control User Manual, publication 20D-UM003	Provides instructions for developing DriveLogix controller projects.
DriveGuard® Safe-Off Option for PowerFlex 700S Drives with Phase II Control, publication 20D-UM007	Provides information and instructions for properly planning for and installing the DriveGuard Safe Torque Off option board.
Wiring and Grounding Guidelines for Pulse Width Modulated (PWM) AC Drives, publication DRIVES-IN001	Provides basic information needed to properly wire and ground PWM AC drives.
PowerFlex AC Drives in Common Bus Configurations, publication DRIVES-AT002	Provides basic information needed to properly wire and ground PWM AC drives using a common DC bus.
Safety Guidelines for the Application, Installation and Maintenance of Solid State Control, publication SGI-1.1	Provides general guidelines for the application, installation, and maintenance of solid-state control.
Guarding Against Electrostatic Damage, publication 8000-4.5.2	Provides practices for guarding against Electrostatic damage (ESD)
Product Certifications website, http://rok.auto/certifications	Provides declarations of conformity, certificates, and other certification details.

You can view or download publications at http://www.rockwellautomation.com/global/literature-library/overview.page.

Summary of Changes

Description of New or Updated Information	Page
Updated CE Conformity information: The PowerFlex 700S drive is not CE Certified when the resolver feedback module is installed in the drive.	6, 66

Step 1: Read the General Precautions

Qualified Personnel

ATTENTION: Only qualified personnel familiar with adjustable frequency AC drives and associated machinery should plan or implement the installation, startup and subsequent maintenance of the system. Failure to comply may result in personal injury and/or equipment damage.

Personal Safety

ATTENTION: To avoid an electric shock hazard, verify that the voltage on the bus capacitors has discharged before performing any work on the drive. Measure the DC bus voltage at the +DC and –DC terminals of the Power Terminal Block (refer to page 35 for location). The voltage must be zero.

ATTENTION: Hazard of personal injury or equipment damage exists when using bipolar input sources. Noise and drift in sensitive input circuits can cause unpredictable changes in motor speed and direction. Use speed command parameters to help reduce input source sensitivity.

ATTENTION: Risk of injury or equipment damage exists. DPI or SCANport™ host products must not be directly connected together via 1202 cables. Unpredictable behavior can result if two or more devices are connected in this manner.

ATTENTION: The drive start/stop/enable control circuitry includes solid state components. If hazards due to accidental contact with moving machinery or unintentional flow of liquid, gas or solids exists, an additional hardwired stop circuit may be required to remove the AC line to the drive. An auxiliary braking method may be required.

ATTENTION: Hazard of personal injury or equipment damage due to unexpected machine operation exists if the drive is configured to automatically issue a Start or Run command. Do not use these functions without considering applicable local, national and international codes, standards, regulations or industry guidelines.

ATTENTION: Parameters 365 [Encdr0 Loss Cnfg] - 394 [VoltFdbkLossCnfg] let you determine the action of the drive in response to operating anomalies. Precautions should be taken to be sure that the settings of these parameters do not create hazards of personal injury or equipment damage.

ATTENTION: Parameters 383 [SL CommLoss Data] - 392 [NetLoss DPI Cnfg] let you determine the action of the drive if communications are disrupted. You can set these parameters so the drive continues to run. Precautions should be taken to ensure the settings of these parameters do not create hazards of personal injury or equipment damage.

ATTENTION: This product contains a 3V Lithium battery if the DriveLogix Controller option board is installed. Perchlorate Material - special handling may apply. See www.dtsc.ca.gov/hazardouswaste/perchlorate.

Product Safety

ATTENTION: An incorrectly applied or installed drive can result in component damage or a reduction in product life. Wiring or application errors such as under sizing the motor, incorrect or inadequate AC supply, or excessive surrounding air temperatures may result in malfunction of the system.

ATTENTION: This drive contains ESD (Electrostatic Discharge) sensitive parts and assemblies. Static control precautions are required when installing, testing, servicing or repairing this assembly. Component damage may result if ESD control procedures are not followed. If you are not familiar with static control procedures, reference Guarding Against Electrostatic Damage, publication 8000-4.5.2 or any other applicable ESD protection handbook.

ATTENTION: Configuring an analog input for 0-20 mA operation and driving it from a voltage source could cause component damage. Verify proper configuration prior to applying input signals.

ATTENTION: A contactor or other device that routinely disconnects and reapplies the AC line to the drive to start and stop the motor can cause drive hardware damage. The drive is designed to use control input signals that will start and stop the motor. If an input device is used, operation must not exceed one cycle per minute or drive damage will occur.

Class 1 LED Product

ATTENTION: Hazard of permanent eye damage exists when using optical transmission equipment. This product emits intense light and invisible radiation. Do not look into module ports or fiber optic cable connectors.

Step 2: Prepare for Installation

Catalog Number Explanation

1…3	4	5…7	8	9	10	11	12	13	14	15	16	17
20D	D	2P1	A	0	E	Y	N	A	N	A	N	E
a	b	c	d	e	f	g	h	i	j	k	l	m

a

Drive	
Code	Type
20D	PowerFlex 700S

b

Voltage Rating			
Code	Voltage	Ph.	Precharge
B(1)	240V AC	3 (6 pulse)	-
C(1)	400V AC	3 (6 pulse)	-
D(1)	480V AC	3 (6 pulse)	-
E(1)(2)	600V AC	3 (6 pulse)	-
F(3)	690V AC	3 (6 pulse)	-
H(3)	540V DC	-	N
J(3)	650V DC	-	N
K(3)	810V DC	-	N
M(3)	932V DC	-	N
N(3)	325V DC	-	Y
P(3)	540V DC	-	Y
R(3)	650V DC	-	Y
T(3)	810V DC	-	Y
W(3)	932V DC	-	Y

(1) For DC input on Frames 1…4, use the corresponding AC input code B, C, D or E.
(2) CE Certification testing has not been performed on 600V class drives, Frames 1…4.
(3) Frames 5 & 6 only.

c5

PowerFlex 700S ND Rating			
690V, 50 Hz Input			
Code	Amps	kW	Frame
052	52	45	5
060	60	55	
082	82	75	
098	98	90	
119	119	110	6
142	142	132	

d

Enclosure	
Code	Description
A	IP20, NEMA Type 1 with Conformal Coat

e

HIM (Human Interface Machine)	
Code	Operator Interface
0	Blank Cover
3	Full Numeric LCD

c1

PowerFlex 700S ND Rating				
208/240V, 60 Hz Input				
Code	208V Amps	240V Amps	Hp	Frame
4P2	4.8	4.2	1.0	1
6P8	7.8	6.8	2.0	
9P6	11	9.6	3.0	
015	17.5	15.3	5.0	
022	25.3	22	7.5	
028	32.2	28	10	2
042	48.3	42	15	3
052	56	52	20	
070	78.2	70	25	4
080	92	80	30	
104	120	104	40	5
130	130	130	50	
154	177	154	60	6
192	221	192	75	
260	260	260	100	

c2

PowerFlex 700S ND Rating			
400V, 50 Hz Input			
Code	Amps	kW	Frame
2P1	2.1	0.75	1
3P5	3.5	1.5	
5P0	5.0	2.2	
8P7	8.7	4.0	
011	11.5	5.5	
015	15.4	7.5	
022	22	11	
030	30	15	2
037	37	18.5	
043	43	22	3
056	56	30	
072	72	37	
085	85	45	4
105	105	55	5
125	125	55	
170	170	90	6
205	205	110	
260	260	132	

c3

PowerFlex 700S ND Rating			
480V, 60 Hz Input			
Code	Amps	Hp	Frame
2P1	2.1	1.0	1
3P4	3.4	2.0	
5P0	5	3.0	
8P0	8	5.0	
011	11	7.5	
014	14	10	
022	22	15	
027	27	20	2
034	34	25	
040	40	30	3
052	52	40	
065	65	50	
077	77	60	4
096	96	75	5
125	125	100	
156	156	125	6
180	180	150	
248	248	200	

c4

PowerFlex 700S ND Rating			
600V, 60 Hz Input(1)			
Code	Amps	Hp	Frame
1P7	1.7	0	1
2P7	2.7	2	
3P9	3.9	3	
6P1	6.1	5	
9P0	9	7.5	
011	11	10	
017	17	15	
022	22	20	2
027	27	25	
032	32	30	3
041	41	40	
052	52	50	
062	62	60	4
077	77	75	5
099	99	100	
125	125	125	6
144	144	150	

(1) CE Certification testing has not been performed on 600V class drives Frames 1…4.

Catalog Number Explanation, Continued

f

Documentation	
Code	Documents
E	English Manual
N	No Documentation

g

Brake	
Code	w/Brake IGBT[1]
Y	Yes
N	No

(1) Brake IGBT is standard on Frames 1…3 and optional on Frames 4…9 ONLY.

h

Brake Resistor	
Code	w/Resistor
Y	Yes[1]
N	No

(1) Not available for Frame 3 drives or larger.

i

Emission			
Code	CE Filter[1]	CM Choke	du/dt Filter
A	Yes	Yes	No

(1) CE Certification testing has not been performed on 600V class drives Frames 1…4.

j

Comm Slot	
Code	Version
N	None
C	DPI ControlNet (Coax)
D	DPI DeviceNet
E	DPI EtherNet/IP
1[1]	DriveLogix ControlNet (Coax)
2[1]	DriveLogix ControlNet Redundant (Coax)
3[1]	DriveLogix ControlNet (Fiber)
4[1]	DriveLogix ControlNet Redundant (Fiber)
5[1]	DriveLogix DeviceNet (Open Conn.)
6[1]	DriveLogix EtherNet/IP

(1) Comm Slot options 1…6 are no longer available for sale as factory installed. They may exist in older models.

k

Control Options[1]			
Code	Logix Expansion	Synchlink	Cassette
A	No	No	Expanded
B	No	Yes	Expanded
C	Yes	No	Expanded
D	Yes	Yes	Expanded
G[2]	N/A	No	Slim
H[2]	N/A	Yes	Slim

(1) Phase II control available only.
(2) Frame 1…9 only.

l

Feedback	
Code	Option
N[1]	Standard (Incremental Encoder)
A[2] [3] [4]	Resolver
B[2][3]	Stegmann Hi-Resolution Encoder
C[2][3]	Multi-Device Interface
E[2]	2nd Encoder
S[2]	Safe-Off (w/2nd Encoder)
T[2][3]	Stegmann Hi-Res Enc. (w/2nd Encoder)
U[2][3]	Stegmann Hi-Res Enc. (w/Safe-Off)

(1) One encoder interface included with base drive.
(2) Expanded cassette required.
(3) No longer available for sale as factory installed, see PowerFlex 700S Technical Data, Publication 20D-TD002 for User Installed Option Kits for available kits.
(4) The PowerFlex 700S drive is not CE Certified when the resolver feedback module is installed in the drive.

m

Additional Configuration	
Code	Description
E	Phase II Control
K	Phase II DriveLogix 5730
L[1] [2]	Phase II DriveLogix 5730 w/EtherNet/IP

(1) This is an embedded EtherNet/IP option that is only available with DriveLogix 5730.
(2) No longer available for sale as factory installed, see PowerFlex 700S Technical Data, Publication 20D-TD002 for User Installed Option Kits for available kits.

Drive Rating to Frame Size Cross References

208/240 Volt AC Input, Six Pulse Drives

208V AC Input (1)			240V AC Input			Frame Size
Cat. No.	Normal Duty kW Rating	Heavy Duty kW Rating	Cat. No.	Normal Duty Hp Rating	Heavy Duty Hp Rating	
20DB4P2	0.75	0.55	20DB4P2	1	0.75	1
20DB6P8	1.5	1.1	20DB6P8	2	1.5	1
20DB9P6	2.2	1.5	20DB9P6	3	2	1
20DB015	4.0	3.0	20DB015	5	3	1
20DB022	5.5	4.0	20DB022	7.5	5	1
20DB028	7.5	5.5	20DB028	10	7.5	2
20DB042	11	7.5	20DB042	15	10	3
20DB052	15	11	20DB052	20	15	3
20DB070	18.5	15	20DB070	25	20	4
20DB080	22	18.5	20DB080	30	25	4
20DB104	30	22	20DB104	40	30	5
20DB130	37	30	20DB130	50	40	5
20DB154	45	37	20DB154	60	50	6
20DB192	55	45	20DB192	75	60	6
20DB260	66	55	20DB260	100	75	6

(1) The drive must be programmed to this voltage.

400/480 Volt AC Input, Six Pulse Drives

400V AC Input			480V AC Input			Frame Size
Cat. No.	Normal Duty kW Rating	Heavy Duty kW Rating	Cat. No.	Normal Duty Hp Rating	Heavy Duty Hp Rating	
20DC2P1	0.75	0.55	20DD2P1	1.0	0.75	1
20DC3P5	1.5	1.1	20DD3P4	2.0	1.5	1
20DC5P0	2.2	1.5	20DD5P0	3.0	2.0	1
20DC8P7	4.0	3.0	20DD8P0	5.0	3.0	1
20DC011	5.5	4.0	20DD011	7.5	5.0	1
20DC015	7.5	5.5	20DD014	10	7.5	1
20DC022	11	7.5	20DD022	15	10	1
20DC030	15	11	20DD027	20	15	2
20DC037	18.5	15	20DD034	25	20	2
20DC043	22	18.5	20DD040	30	25	3
20DC056	30	22	20DD052	40	30	3
20DC072	37	30	20DD065	50	40	3
20DC085	45	37	20DD077	60	50	4
20DC105	55	45	20DD096	75	60	5
20DC125	55	45	20DD125	100	75	5
20DC140	75	55				5

400/480 Volt AC Input, Six Pulse Drives (continued)

400V AC Input			480V AC Input			Frame Size
Cat. No.	Normal Duty kW Rating	Heavy Duty kW Rating	Cat. No.	Normal Duty Hp Rating	Heavy Duty Hp Rating	
20DC170	90	75	20DD156	125	100	6
20DC205	110	90	20DD180	150	125	6
20DC260	132	110	20DD248	200	150	6

600/690 Volt AC Input, Six Pulse Drives

600V AC Input			690V AC Input			Frame Size
Cat. No.	Normal Duty Hp Rating	Heavy Duty Hp Rating	Cat. No.	Normal Duty kW Rating	Heavy duty kW Rating	
20DE1P7	1.0	0.75				1
20DE2P7	2.0	1.5				1
20DE3P9	3.0	2.0				1
20DE6P1	5.0	3.0				1
20DE9P0	7.5	5.0				1
20DE011	10	7.5				1
20DE017	15	10				1
20DE022	20	15				2
20DE027	25	20				2
20DE032	30	25				3
20DE041	40	30				3
20DE052	50	40				3
20DE062	60	50				4
			20DF052	45	37.5	5
			20DF060	55	45	5
20DE077	75	60	20DF082	75	55	5
20DE099	100	75	20DF098	90	75	5
20DE125	125	100	20DF119	110	90	6
20DE144	150	125	20DF142	132	110	6

325 Volt DC Input, Six Pulse Drives

325V DC Input			Frame Size
Cat. No.	Normal Duty Hp Rating	Heavy Duty Hp Rating	
20DB015	5.0	3.0	1
20DB022	7.5	5.0	1
20DB028	10	7.5	2
20DB042	15	10	3
20DB052	20	15	3
20DB070	25	20	4
20DB080	30	25	4

325 Volt DC Input, Six Pulse Drives (continued)

325V DC Input			Frame Size
Cat. No.	Normal Duty Hp Rating	Heavy Duty Hp Rating	
20DN104	40	30	5
20DN130	50	40	5
20DN154	60	50	6
20DN192	75	60	6
20DN260	100	75	6

540/650 Volt DC Input Drives

540V DC Input			650V DC Input			Frame Size
Cat. No.	Normal Duty kW Rating	Heavy Duty kW Rating	Cat. No.	Normal Duty HP Rating	Heavy Duty HP Rating	
20DC3P5	1.5	1.1	20DD2P1	1.0	0.75	1
20DC5P0	2.2	1.5	20DD3P4	2.0	1.5	1
20DC8P7	4.0	3.0	20DD5P0	3.0	2.0	1
20DC011	5.5	4.0	20DD8P0	5.0	3.0	1
20DC015	7.5	5.5	20DD011	7.5	5.0	1
20DC022	11	7.5	20DD014	10	7.5	1
			20DD022	15	10	1
20DC030	15	11	20DD027	20	15	2
20DC037	18.5	15	20DD034	25	20	2
20DC043	22	18.5	20DD040	30	25	3
20DC056	30	22	20DD052	40	30	3
20DC072	37	30	20DD065	50	40	3
20DC085	45	37	20DD077	60	50	4
20DH105	55	45	20DJ096	75	60	5
20DH125	55	45	20DJ125	100	75	5
20DH140	75	55				5
20DH170	90	75	20DJ156	125	100	6
20DH205	110	90	20DJ180	150	125	6
20DH260	132	110	20DJ248	200	150	6

810/932 Volt DC Input Drives

810V DC Input			932V DC Input			Frame Size
Cat. No.	Normal Duty Hp Rating	Heavy Duty Hp Rating	Cat. No.	Normal Duty kW Rating	Heavy Duty kW Rating	
20DE1P7	1.0	0.75				1
20DE2P7	2.0	1.5				1
20DE3P9	3.0	2.0				1
20DE6P1	5.0	3.0				1
20DE9P0	7.5	5.0				1
20DE011	10	7.5				1

810/932 Volt DC Input Drives (continued)

810V DC Input			932V DC Input			Frame Size
Cat. No.	Normal Duty Hp Rating	Heavy Duty Hp Rating	Cat. No.	Normal Duty kW Rating	Heavy Duty kW Rating	
20DE017	15	10				1
20DE022	20	15				2
20DE027	25	20				2
20DE032	30	25				3
20DE041	40	30				3
20DE052	50	40				3
20DE062	60	50				4
20DT099	100	75	20DW098	90	75	5
20DT144	150	125	20DW142	132	110	6

CE Conformity

Compliance with the Low Voltage (LV) Directive and Electromagnetic Compatibility (EMC) Directive has been demonstrated using harmonized European Norm (EN) standards published in the Official Journal of the European Communities. PowerFlex drives comply with the EN standards listed below when installed according to the PowerFlex 700S AC Drives Phase II Control User and Reference Manuals.

CE Declarations of Conformity are available online at: http://rok.auto/certifications

Low Voltage Directive (2014/35/EU)

- EN 61800-5-1 Adjustable speed electrical power drive systems – Part 5-1: Safety requirements – Electrical, thermal and energy.

EMC Directive (2014/30/EU)

- EN 61800-3 Adjustable Speed Electrical Power Drive Systems - Part 3: EMC Product Standard Including Specific Test Methods.

General Considerations

- If the adhesive label is removed from the top of the drive, the drive must be installed in an enclosure with side openings less than 12.5 mm (0.5 in.) and top openings less than 1.0 mm (0.04 in.) to maintain compliance with the LV Directive.
- The motor cable should be kept as short as possible to avoid electromagnetic emission as well as capacitive currents.
- Use of line filters in ungrounded systems is not recommended.
- PowerFlex drives may cause radio frequency interference if used in a residential or domestic environment. The installer is required to take measures to prevent interference, in addition to the essential requirements for CE compliance provided in this section, if necessary.
- Conformity of the drive with CE EMC requirements does not guarantee an entire machine or installation complies with CE EMC requirements. Many factors can influence total machine/installation compliance.
- PowerFlex drives can generate conducted low frequency disturbances (harmonic emissions) on the AC supply system.
- More information regarding harmonic emissions can be found in the PowerFlex 700S AC Drives Phase II Control, Reference Manual, publication PFLEX-RM003.
- When operated on a public supply system, it is the responsibility of the installer or user to be sure, by consultation with the distribution network operator and Rockwell Automation, if necessary, that applicable requirements have been met.

Essential Requirements for CE Compliance

Conditions 1...6 listed below **must be** satisfied for PowerFlex 700S Phase II drives to meet the requirements of **EN61800-3**.

1. Standard PowerFlex 700S CE compatible drive.
2. Review important precautions/attentions statements throughout this document before installing drive.
3. Grounding as described in Grounding Requirements on page 22.
4. Output power, control (I/O) and signal wiring must be braided, shield cable with a coverage of 75% or better, metal conduit or have shielding/cover with equivalent attenuation.
5. All shielded cables should terminate with proper shielded connector.
6. Conditions in PowerFlex 700S EN61800-3 EMC Compatibility on page 11.
7. The PowerFlex 700S drive is not CE Certified when the resolver feedback module is installed in the drive.

PowerFlex 700S EN61800-3 EMC Compatibility

Frames	Second Environment	First Environment Restricted Distribution[1]	
	Restrict Motor Cable to 30 m (98 ft)	*Restrict Motor Cable to 150 m (492 ft)*	
	Any Drive and Option	*Any Drive and Option*	*External Filter Required*
1…6	√	√	√

(1) External filters for First Environment installations and increasing motor cable lengths in Second Environment installations are available. Roxburgh models KMFA (RF3 for UL installations) and MIF or Schaffner FN3258 and FN258 models are recommended. Refer to http://www.deltron-emcon.com and http://www.mtecorp.com (USA) or http://www.schaffner.com, respectively.

Common Bus and Precharge Considerations

The following notes must be read and understood. Also refer to Selecting/Verifying Fan Voltage (Frames 5 and 6 Only) on page 30 through Power Terminal Blocks on page 36 for additional common bus information.

1. If drives without internal precharge are used (frames 5 and 6 only), then:
   a. precharge capability must be provided in the system to guard against possible damage, and
   b. disconnect switches **Must Not** be used between the input of the drive and a common DC bus without the use of an external precharge device.
2. If drives with internal precharge (frames 1...6) are used with a disconnect switch to the common bus, then an auxiliary contact on the disconnect must be connected to a digital input of the drive. The corresponding input (parameter 361...366) must be set to option 30, "Precharge Enable." This provides the proper precharge interlock, guarding against possible damage to the drive when connected to a common DC bus.

Refer to PowerFlex AC Drives in Common Bus Configurations, publication DRIVES-AT002, for more information.

Operating Conditions and Temperatures

PowerFlex 700S frame 1...6 drives are designed to operate at 0...40 °C (32...104 °F) ambient. To operate most frame 1...4 drives in installations between 41 and 50 °C (105.8 and 122 °F), you must remove the top adhesive label from the drive. Frames 5 and 6 do not have an adhesive label. See Enclosure Types and Acceptable Surrounding Air Temperature on page 12 and Minimum Mounting Clearances on page 12 on for more information.

IMPORTANT Removing the adhesive label from the top of frame 1…4 drives changes the NEMA/UL enclosure rating from Type 1 to Type Open.

Enclosure Types and Acceptable Surrounding Air Temperature

Enclosure Type	Temperature Rating	Drive
IP20, NEMA/UL Type 1 (with Top Label) (1)	0…40 °C (32…104 °F)	Frame 1…4, All Ratings
	0…50 °C (32…122 °F)	Frames 5 and 6, Most Ratings (3)
IP20, NEMA/UL Type Open (Top Label Removed) (1)	0…50 °C (32…122 °F)	Most Ratings (2)
	0…45 °C (32…113 °F)	20DC072 and 20DE062 Only
IP00, NEMA/UL Type Open (Top Label and Vent Plate Removed) (2)	0…50 °C (32…122 °F)	20DC072 Only
Flange Mount Front (Inside Encl.) - IP00, NEMA/UL Type Open Back/Heat Sink - IP54, NEMA/UL Type 12	0…55 °C (32…131 °F) 0…40 °C (32…104 °F)	Frames 5 and 6
Stand-Alone/Wall Mount - IP54, NEMA/UL Type 12	0…40 °C (32…104 °F)	Frames 5 and 6

(1) Frames 5 and 6 do not have a label.
(2) To remove the vent plate, lift the top edge of the plate away from the chassis and rotate the plate out from the back plate. Refer to Bottom Views, Frames 1…3 on page 14 for location of vent plate.
(3) Refer to the Fusing and Circuit Breakers tables on page 39, for exceptions.

IMPORTANT PowerFlex 700S drives must be mounted in a clean, dry location. Contaminants such as oils, corrosive vapors and abrasive debris must be kept out of the enclosure. These enclosures are intended for indoor use primarily to provide a degree of protection against contact with enclosed equipment. These enclosures offer no protection against airborne contaminants.

Minimum Mounting Clearances

Specified vertical clearance requirements are intended to be from the drive to the closest object that can restrict airflow through the drive heat sink and chassis. The drive must be mounted in a vertical orientation as shown, and must make full contact with the mounting surface. Do not use standoffs or spacers. In addition, inlet air temperature must not exceed the product specification. See Enclosure Types and Acceptable Surrounding Air Temperature on page 12 for ambient air temperature limits.

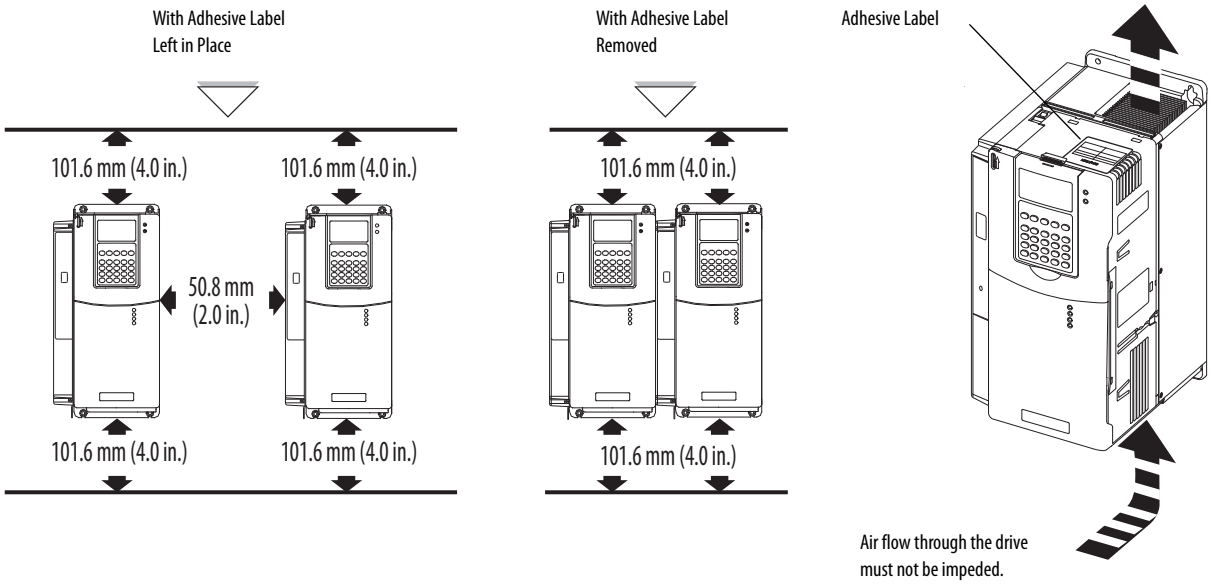

Approximate Dimensions

Frames 1…3

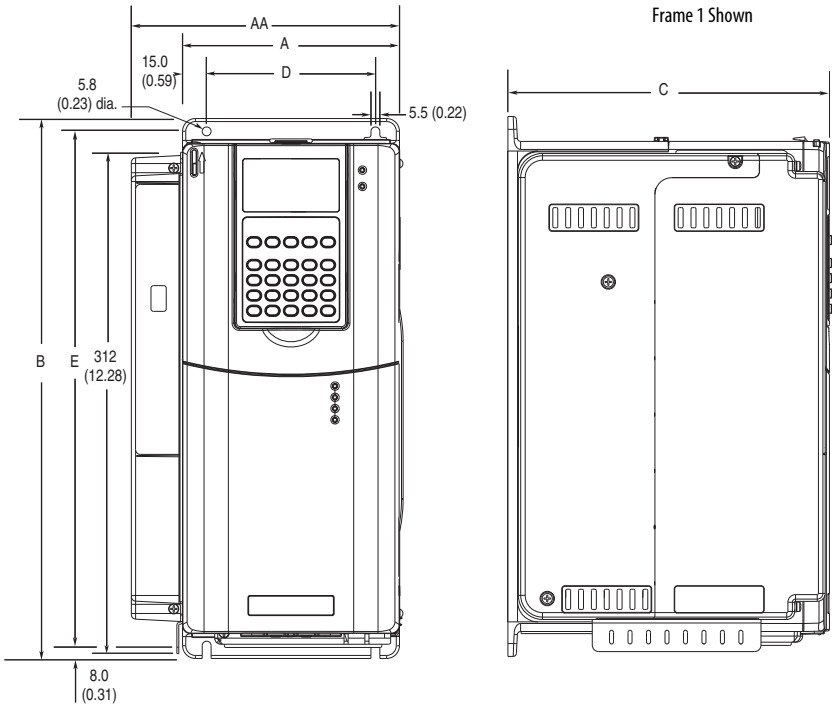

Dimensions are in millimeters and (inches)

Frame (1)	Slim Cassette A	Expanded Cassette AA	B	C	D	E
1	135.0 (5.31)	166.9 (6.57)	336.0 (13.23)	200.0 (7.87)	105.0 (4.13)	320.0 (12.60)
2	222.0 (8.74)	253.9 (9.99)	342.5 (13.48)	200.0 (7.87)	192.0 (7.56)	320.0 (12.60)
3	222.0 (8.74)	253.9 (9.99)	517.5 (20.37)	200.0 (7.87)	192.0 (7.56)	500.0 (19.69)

(1) Refer to Drive Rating to Frame Size Cross References on page 7 for frame information.

Bottom Views, Frames 1…3

Frame 1

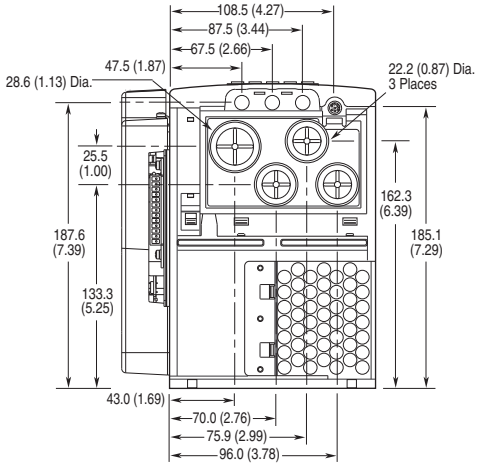

Frame 2

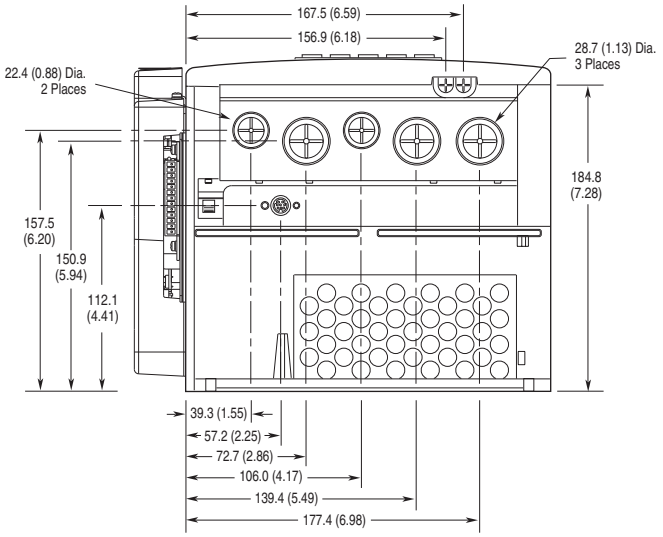

Frame 3 - All Drives, except 50 Hp, 480V (37 kW, 400V)

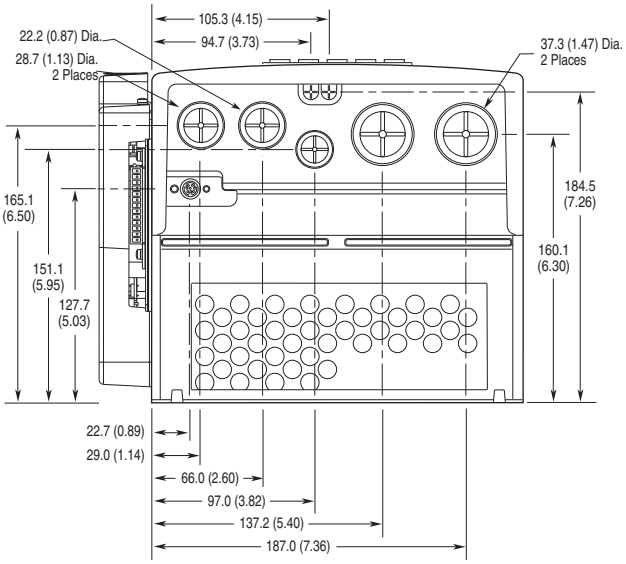

Frame 3 - 50 Hp, 480V (37 kW, 400V) Normal Duty

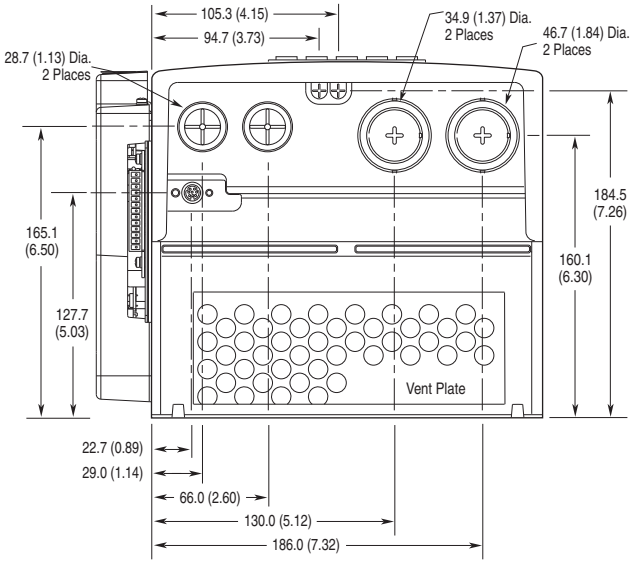

Dimensions are in millimeters and (inches)

Frame 4

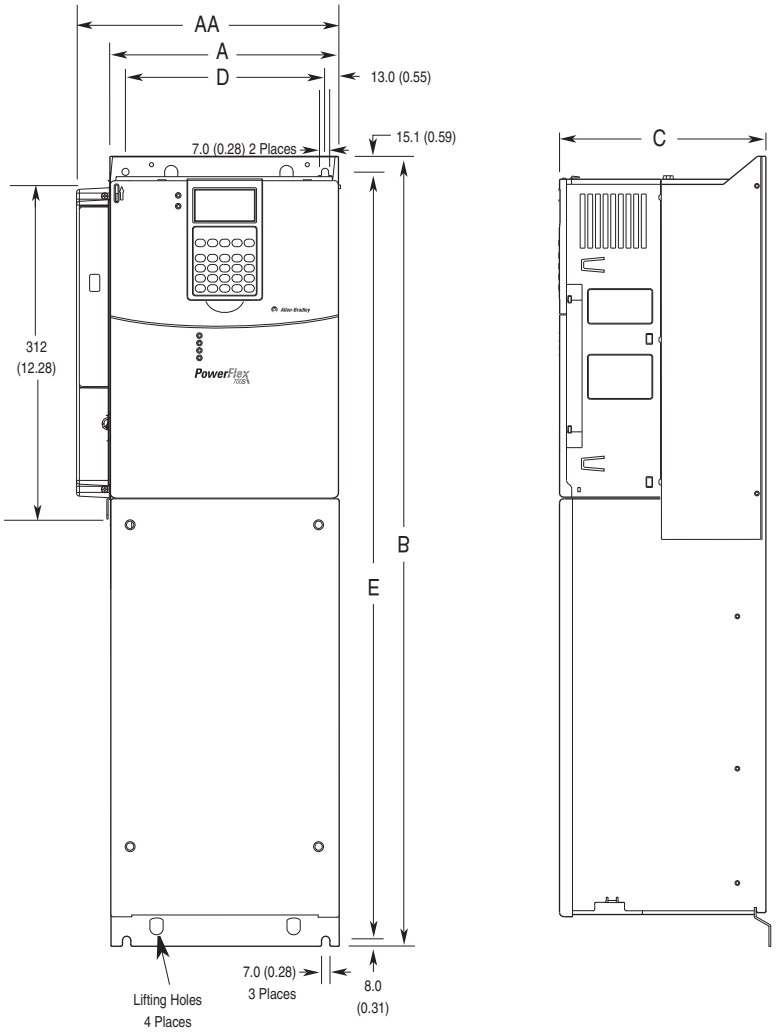

Bottom View

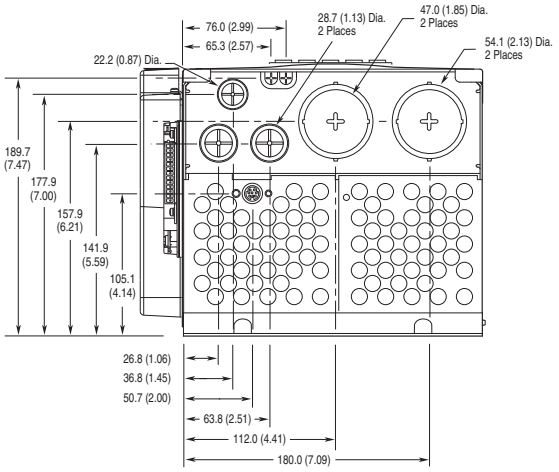

Dimensions are in millimeters and (inches)

Frame (1)	Slim Cassette **A** *(Max)*	Expanded Cassette **AA**	**B**	**C** *(Max)*	**D**	**E**
4	220.0 (8.66)	251.9 (9.92)	758.8 (29.87)	201.7 (7.94)	192.0 (7.56)	738.2 (29.06)

(1) Refer to Drive Rating to Frame Size Cross References on page 7 for frame information.

Frame 5, 75 Hp, 480V (55kW, 400V)

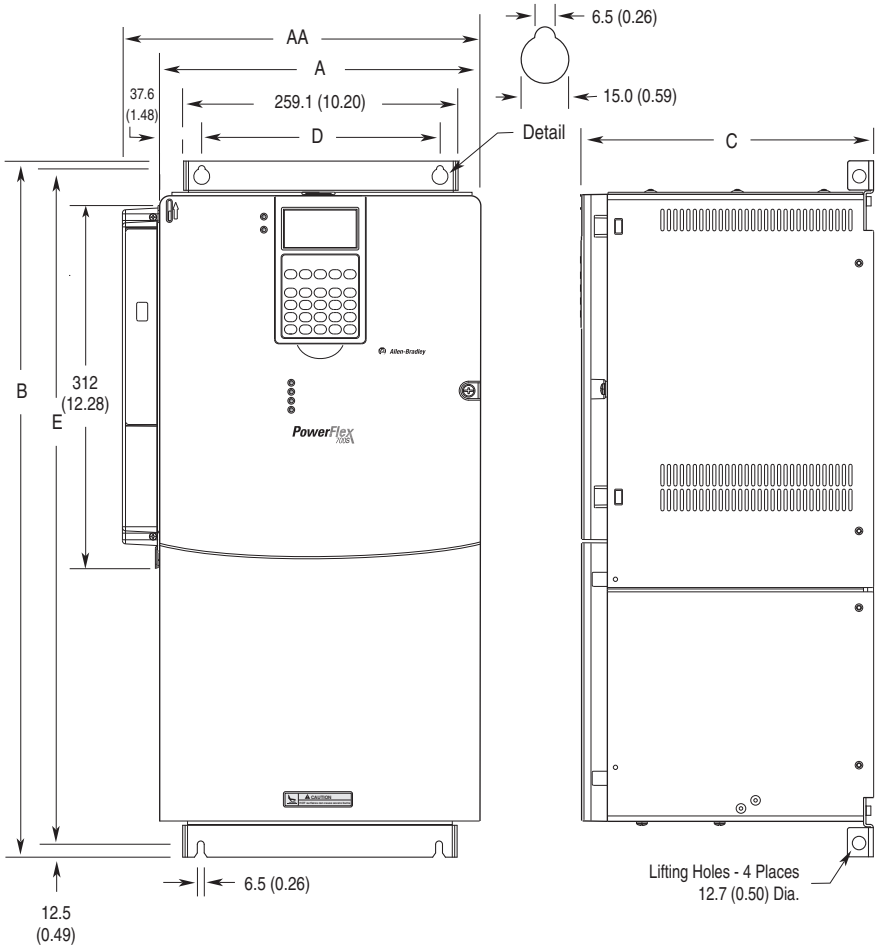

Bottom View

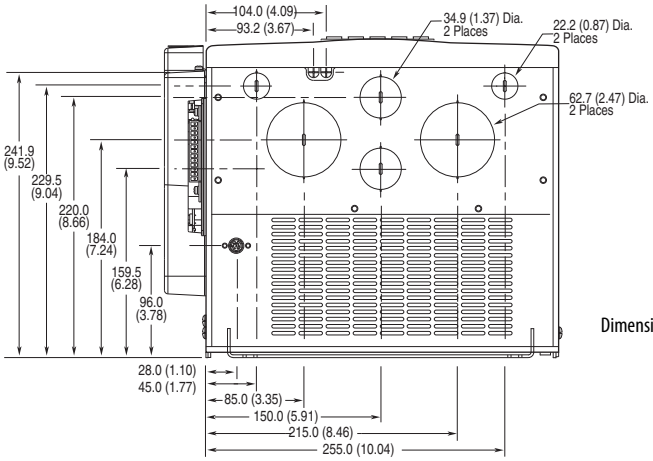

Dimensions are in millimeters and (inches)

Frame (1)	Slim Cassette **A** *(Max)*	Expanded Cassette **AA**	**B**	**C** *(Max)*	**D**	**E**
5	308.0 (12.2)	339.9 (13.4)	644.5 (25.4)	275.4 (10.9)	225.0 (8.9)	625.0 (24.6)

(1) Refer to Drive Rating to Frame Size Cross References on page 7 for frame information.

Frame 5, 100 Hp, 480V (55kW, 400V)

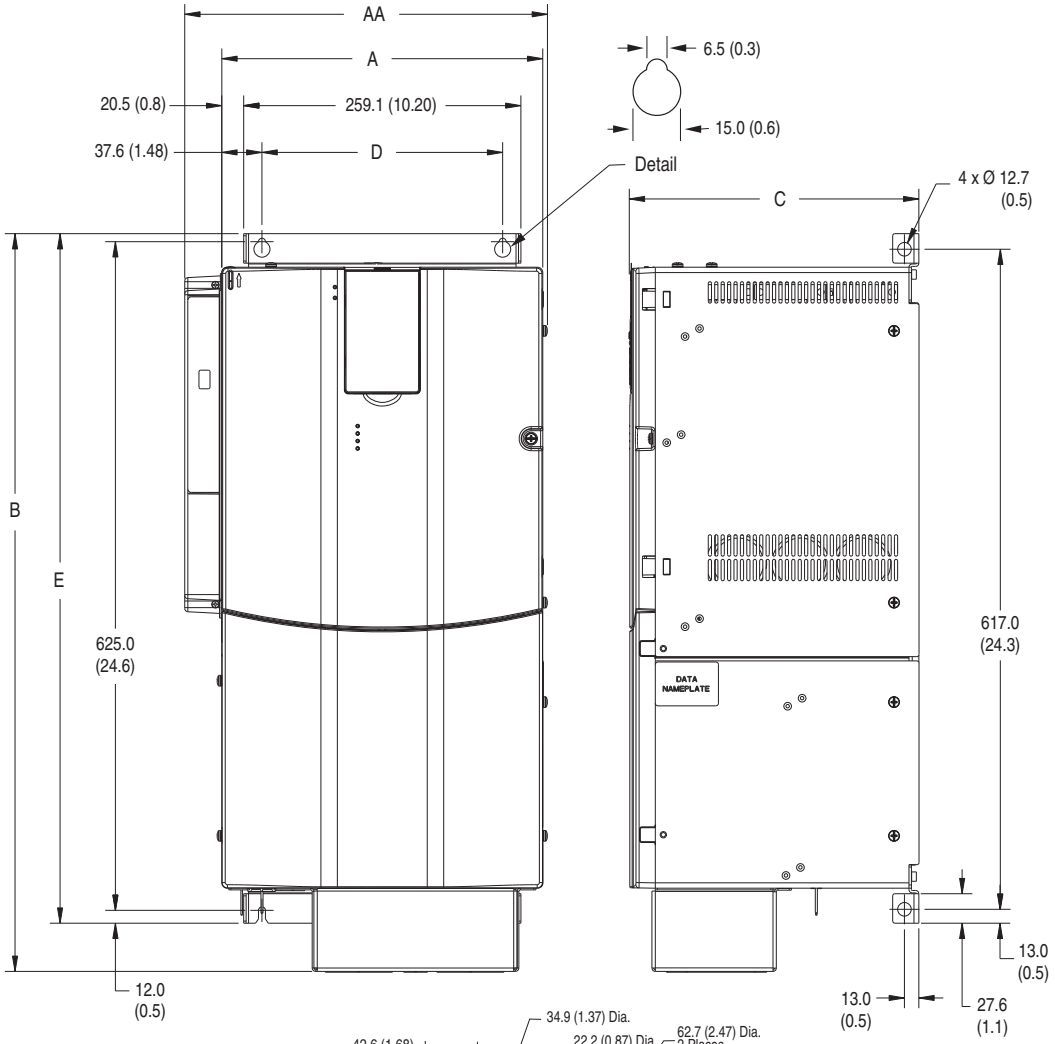

Bottom View

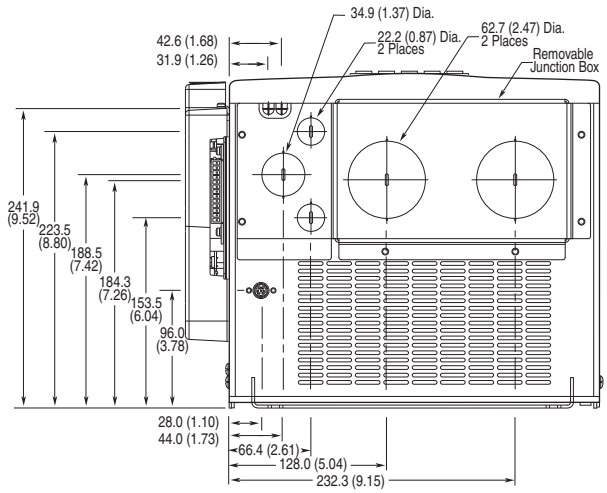

Dimensions are in millimeters and (inches)

Frame (1)	Slim Cassette A *(Max)*	Expanded Cassette AA	B	C *(Max)*	D	E
5	308.9 (12.2)	340.8 (13.4)	689.6 (27.1)	270.35 (10.6)	225.0 (8.9)	644.5 (25.4)

(1) Refer to Drive Rating to Frame Size Cross References on page 7 for frame information.

Frame 6

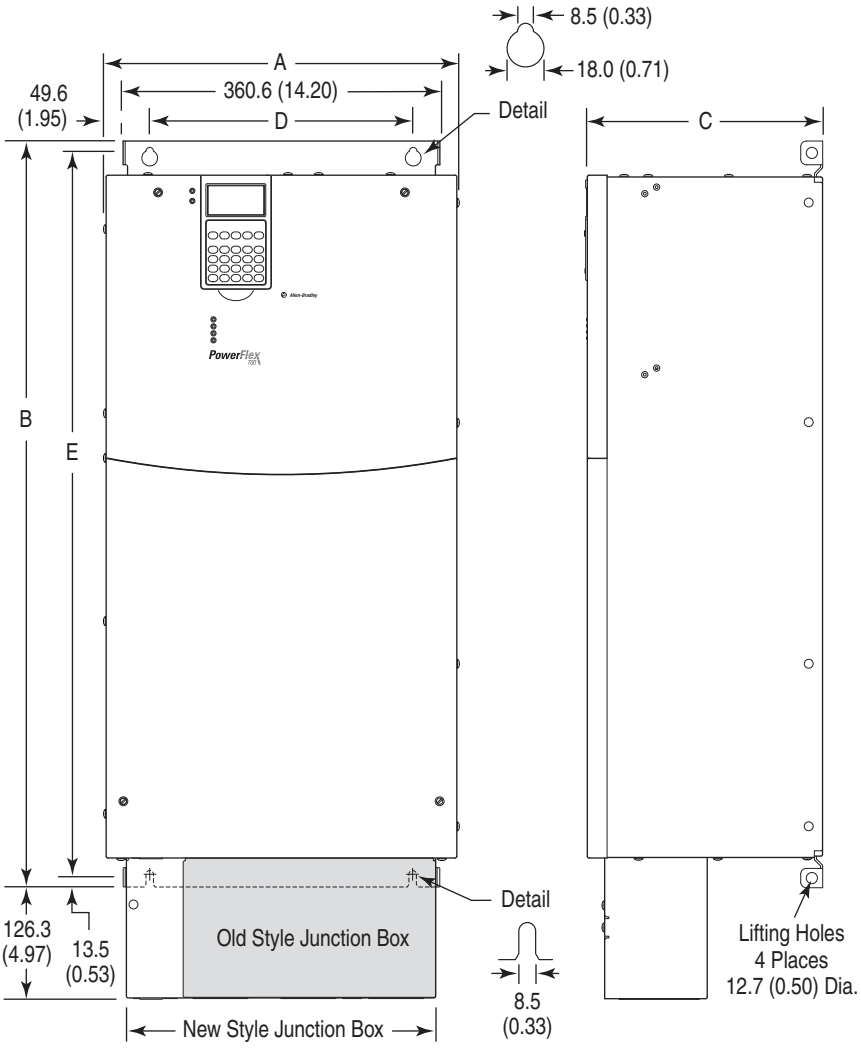

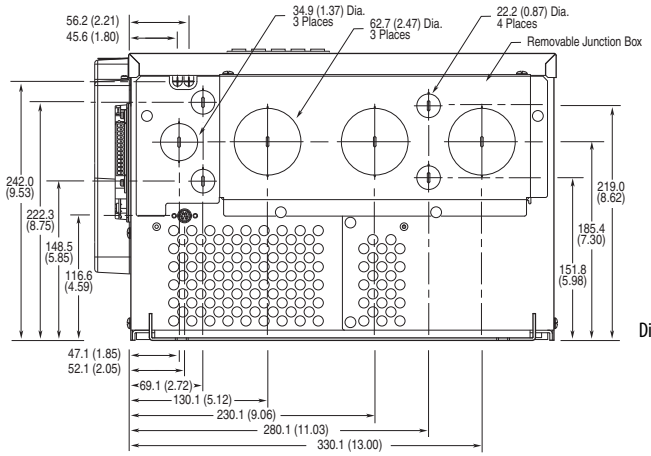

Dimensions are in millimeters and (inches)

Frame (1)	Slim Cassette A *(Max)*	Expanded Cassette AA	B (2)	C *(Max)*	D	E
6	403.9 (15.90)	435.8 (17.16)	850.0 (33.46)	275.5 (10.85)	300.0 (11.81)	825.0 (32.48)

(1) Refer to Drive Rating to Frame Size Cross References on page 7 for frame information.
(2) Junction Box can be removed if drive is mounted in a cabinet.

Step 3: Lift and Mount the Drive

Approximate Drive Weights

Frame Size	Drive Rating		Drive Weight [1]
	kW	Hp	kg (lb)
1	0.75…11	1…10	7.0 (15.5)
2	7.5…18.5	10…25	12.5 (27.6)
3	11…37	15…50	18.6 (40.9)
4	25…60	18.5…55	24.5 (54.0)
5	40…100	30…90	37.2 (82.0)
6	60…200	45…132	71.5 (157.5) [2]

(1) Weights include HIM, DriveLogix controller with ControlNet daughtercard, Hi-Resolution Encoder Option, and 20-COMM-C ControlNet adapter.
(2) Add an additional 3.6 kg (8.0 lb) for 200 Hp drives.

Attaching the Lifting Hardware

All lifting equipment and lifting components (hooks, bolts, lifts, slings, chains, and so forth) must be properly sized and rated to safely lift and hold the weight of the drive while mounting. See Lifting Frame 4 Drives on page 20 and Lifting Frame 5 Drives on page 20, and Lifting Frame 6 Drives on page 21 for lifting instructions.

ATTENTION: To guard against possible personal injury and/or equipment damage…

- Inspect all lifting hardware for proper attachment before lifting drive.
- Do not allow any part of the drive or lifting mechanism to make contact with electrically charged conductors or components.
- Do not subject the drive to high rates of acceleration or deceleration while transporting to the mounting location or when lifting.
- Do not allow personnel or their limbs directly underneath the drive when it is being lifted and mounted.

Lifting Frame 4 Drives

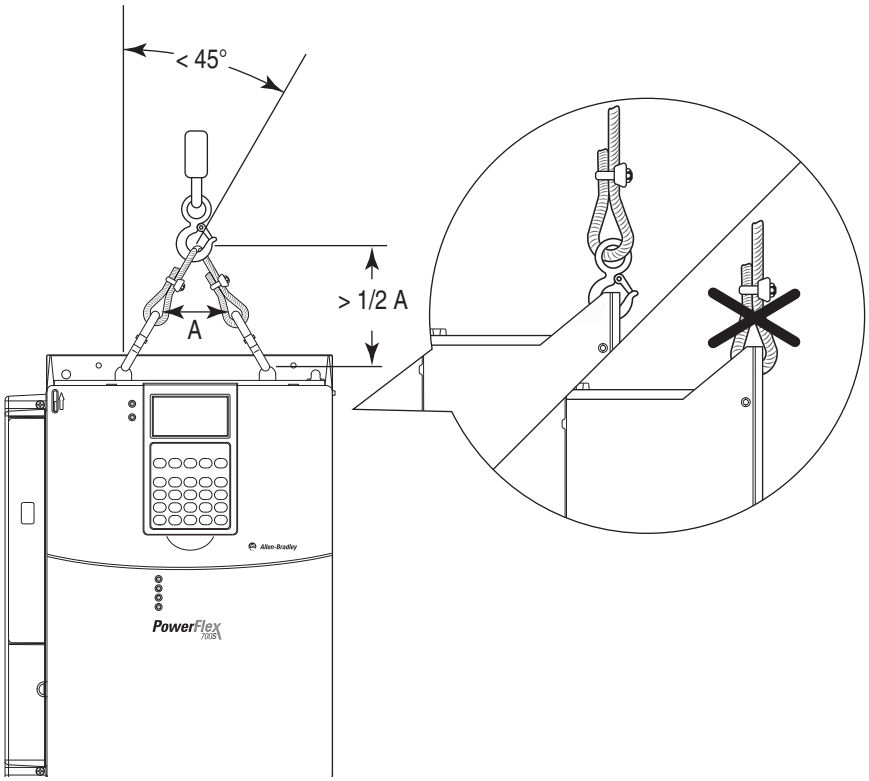

Lifting Frame 5 Drives

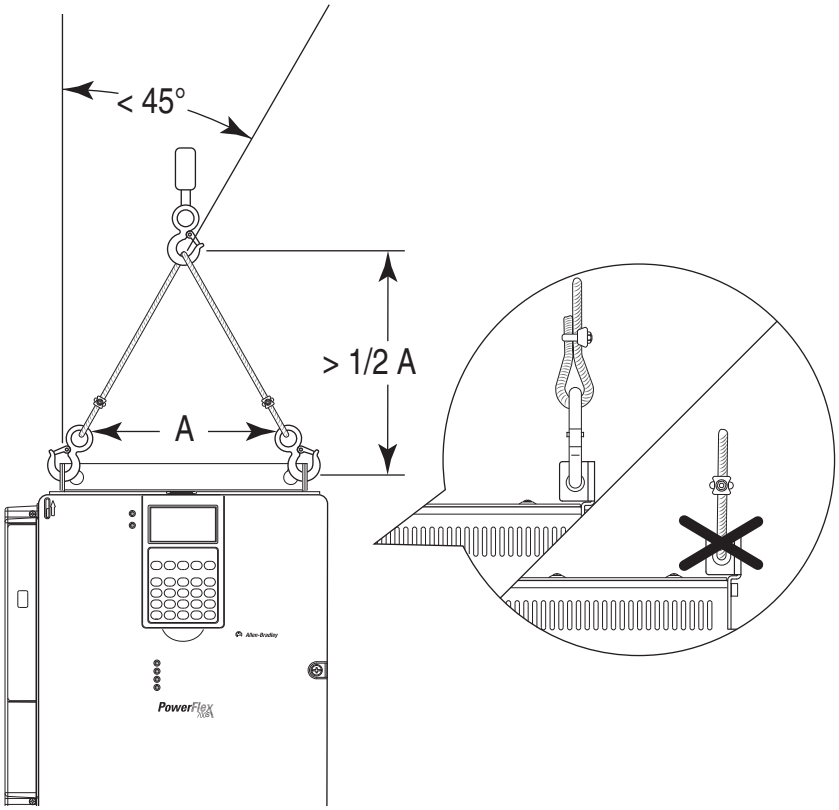

Lifting Frame 6 Drives

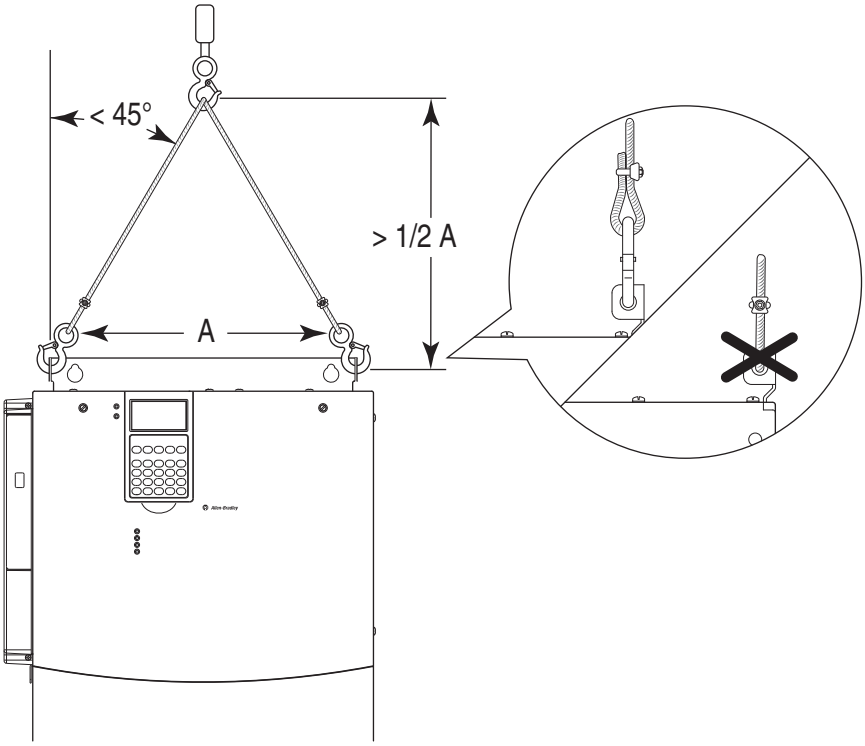

Step 4: Power Wiring

ATTENTION: National Codes and standards (NEC, VDE, BSI and so forth) and local codes outline provisions for safely installing electrical equipment. Installation must comply with specifications regarding wire types, conductor sizes, branch circuit protection and disconnect devices. Failure to do so may result in personal injury and/or equipment damage.

Grounding Requirements

The drive Safety Ground-PE must be connected to system ground. Ground impedance must conform to the requirements of national and local industrial safety regulations and/or electrical codes. The integrity of all ground connections should be periodically checked.

Typical Grounding

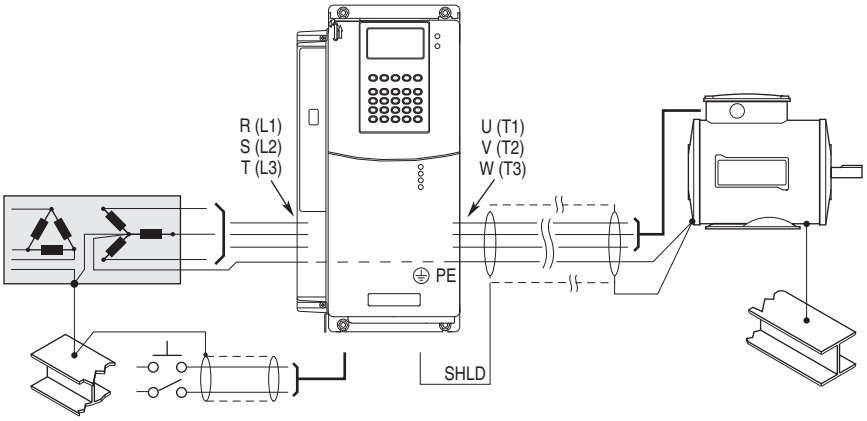

Shield Termination - SHLD

The Shield terminal (see page 34) provides a grounding point for the motor cable shield. It must be connected to an earth ground by a separate continuous lead. The motor cable shield should be connected to this terminal on the drive and the motor frame. Use a shield terminating or EMI clamp to connect shield to this terminal.

Unbalanced, Ungrounded or Resistive Grounded Distribution Systems

If phase to ground voltage will exceed 125% of normal or the supply system is ungrounded, refer to Wiring and Grounding Guidelines for Pulse Width Modulated (PWM) AC Drives, publication DRIVES-IN001, for more information.

ATTENTION: PowerFlex 700S drives contain protective MOVs and common mode capacitors that are referenced to ground. These devices must be configured according to the recommendations in Recommended Power Jumper Configurations on page 23.

RFI Filter Ground

Using an optional RFI filter may result in relatively high ground leakage currents. Therefore, the filter must only be used in installations with grounded AC supply systems and be permanently installed and solidly grounded (bonded) to the building power distribution ground. Be sure that the incoming supply neutral is solidly connected (bonded) to the same building power distribution ground. Grounding must not rely on flexible cables and should not include any form of plug or socket that would permit inadvertent disconnection. Some local codes may require redundant ground connections. The integrity of all connections should be periodically checked. Refer to the instructions supplied with the filter.

Power Jumpers

PowerFlex 700S Phase II drives contain protective MOVs and Common Mode Capacitors that are referenced to ground (see below). To guard against unstable operation and/or damage, the drive must be properly configured as shown in Recommended Power Jumper Configurations on page 23.

MOV and AC EMI Capacitor Phase to Ground

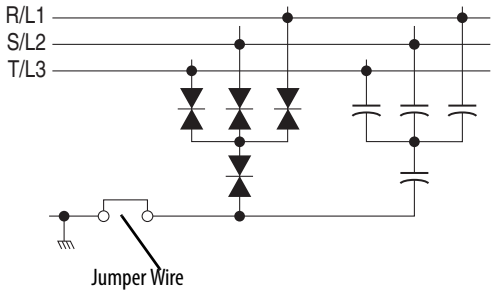

Common Mode Capacitor Phase to Ground

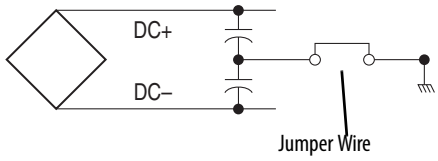

IMPORTANT All PowerFlex 700S Phase II drives are shipped with the DC bus common mode capacitors referenced to ground. The following installation instructions must be completed before applying power to the drive.

Recommended Power Jumper Configurations

Power Source Type (1)	MOV/Input Filter Caps (2)	DC Bus Common Mode Caps	Benefits Of Correct Configuration on Power Source Type
Solid Ground AC fed, solidly grounded DC fed from passive rectifier, which has an AC source and solid ground	Connected	Connected	UL compliance, Reduced electrical noise, Most stable operation, EMC compliance, Reduced voltage stress on components and motor bearings
Non-Solid Ground AC fed ungrounded Impedance grounded High resistive ground B phase ground Regenerative unit such as common DC bus supply & brake DC fed from an active converter	Disconnected	Disconnected	Helps avoid severe equipment damage when ground fault occurs

(1) It is highly recommended to accurately determine the power source type and then configure appropriately.
(2) When MOVs are disconnected, the power system must have its own transient protection to verify known and controlled voltages.

To connect or disconnect these devices, refer to pages 24 through 28.

IMPORTANT Common mode capacitors are required to conform with the EMC directive. Removing these devices will withdraw the associated directive.

In addition, on an ungrounded distribution system where the line-to-ground voltages on any phase could exceed 125% of the nominal line-to-line voltage, an isolation transformer should be installed. See Wiring and Grounding Guidelines for PWM AC Drives, publication DRIVES-IN001 for more information on impedance grounded and ungrounded systems.

Jumper Installation, Removal, and Storage

PowerFlex 700S drives utilize plug-in style jumpers and jumper wires. Most drives will have a jumper storage area inside the front cover. Extra jumpers or jumpers that have been removed should be stored in this location for use at a later time.

Insulating Jumper Wires

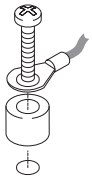

Some drives utilize nylon screws and spacers to insulate jumper wires from ground and secure them to the chassis. The components must be installed as shown.

Drive Identification

Refer to the drive nameplate and locate the "Voltage Code," "Current Rating," "Frame," and "Series". Use this information to locate the proper procedure in the following tables.

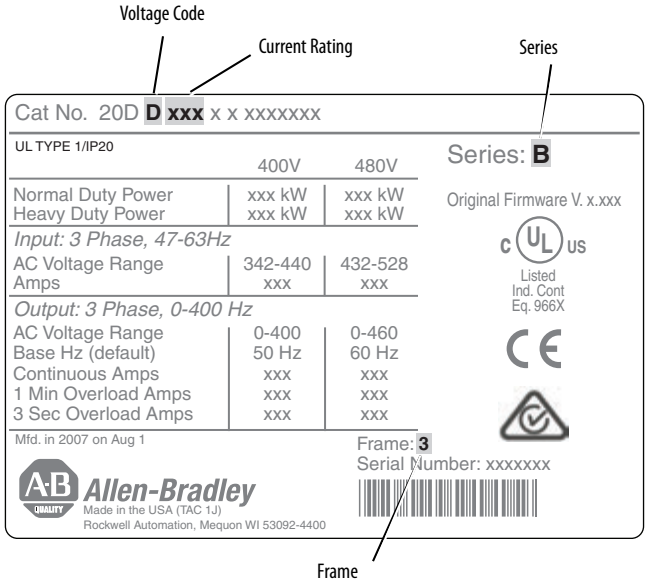

Jumper Settings and Locations

Frame	Voltage Code	Current Rating	Factory Default Jumper Settings		Power Source Type	
			MOV/Input Filter Caps	DC Bus Common Mode Caps		
1	B C D E	All	PE_B Installed	PE_A Installed	**Solid Ground** • Remove the I/O Cassette (refer to the Installation Instructions for details). Verify that jumpers are installed at the "PE_A" and "PE_B" locations on the Power Board. **Non-Solid Ground** • Remove the I/O Cassette (refer to the Installation Instructions for details). Remove jumpers at the "PE_A" and "PE_B" locations on the Power Board.	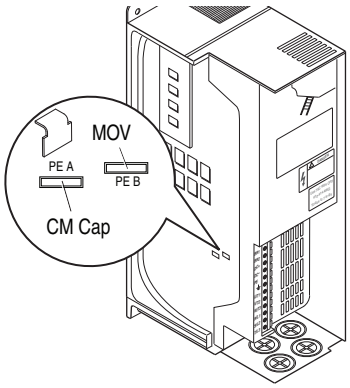

Frame	Voltage Code	Current Rating	Factory Default Jumper Settings		Power Source Type	
			MOV / Input Filter Caps	DC Bus Common Mode Caps		
2	B C D E	All	PE_MOV Installed	PE_CAP Installed	**Solid Ground** • Verify that jumpers are installed at the "PE_CAP" and "PE_MOV" locations. **Non-Solid Ground** • Remove jumpers at the "PE_CAP" and "PE_MOV" locations.	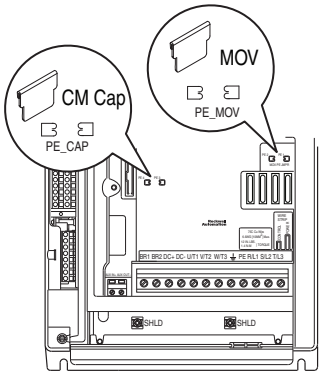
3 & 4	B C D E	All	PE_MOV Installed	PE_CAP Installed	**Solid Ground** • Verify that jumpers are installed at the "PE_CAP" and "PE_MOV" locations. **Non-Solid Ground** • Remove jumpers at the "PE_CAP" and "PE_MOV" locations.	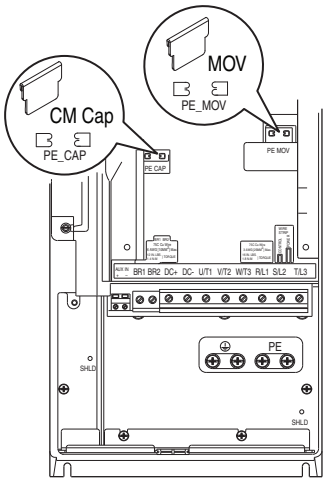

Frame	Voltage Code	Current Rating	Factory Default Jumper Settings		Power Source Type	
			MOV / Input Filter Caps (1) (2)	DC Bus Common Mode Caps		
	C F W	052 060 140	Two green/yellow wires connected to the Power Terminal Block rail	Green/yellow wire to CM Cap Board is connected to ground	**Solid Ground** 1. CM Cap jumper wire should be connected to ground with a metal screw. Verify. If necessary, remove the nylon screw/spacer and insert a metal M5 x 8 screw. Torque to 3.2 N•m (28 lb•in). 2. MOV/Input Filter Cap jumper wires should be connected to ground with a metal screw. Verify. If necessary, remove the nylon screw/spacer and insert a metal M5 x 12 screw. **Non-Solid Ground** 1. CM Cap jumper wire should be insulated from ground with a nylon screw/spacer. Verify. If necessary, remove the metal screw and insert a M5 x 15 nylon screw/spacer. 2. MOV/Input Filter Cap jumper wires should be insulated from ground with a nylon screw/spacer. Verify. If necessary, remove the metal screw and insert a M5 x 20 nylon screw/spacer.	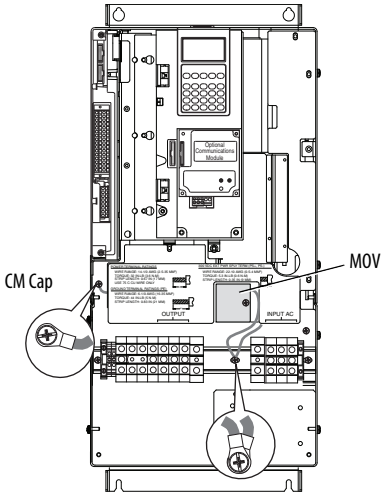
5	E F T W	077 082 098 099	Two green/yellow wires connected to chassis ground	Green/yellow wire to CM Cap Board is connected to ground	**Solid Ground** 1. CM Cap jumper wire should be connected to ground with a metal screw. Verify. If necessary, remove the nylon screw/spacer and insert a metal M5 x 8 screw. Torque to 3.2 N•m (28 lb•in). 2. MOV jumper wire should be connected to ground with metal screws. Verify. If necessary, remove the nylon screw/spacers and insert metal M5 x 12 screws. 3. Input Filter Cap jumper wire should be connected to ground with a metal screw. Verify. If necessary, remove the nylon screw/spacer and insert metal M5 x 8 screw. **Non-Solid Ground** 1. CM Cap jumper wire should be insulated from ground with a nylon screw/spacer. Verify. If necessary, remove the metal screw and insert a M5 x 15 nylon screw/spacer. 2. MOV jumper wire should be insulated from ground with a nylon screw/spacer. Verify. If necessary, remove the metal screws and insert a M5 x 20 nylon screw/spacer. 3. Input Filter Cap jumper wire should be insulated from ground with a nylon screw/spacer. Verify. If necessary, remove the metal screws and insert a M5 x 15 nylon screw/spacer.	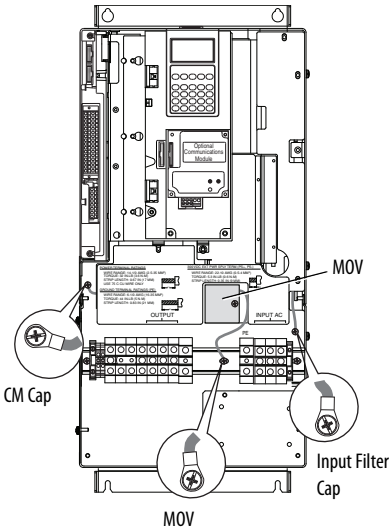

(1) AC input drives only. MOV's and input filter caps do not exist on DC input drives.
(2) When removing MOV's, the input filter capacitor must also be removed.

Frame	Voltage Code	Current Rating	Factory Default Jumper Settings		Power Source Type	
			MOV / Input Filter Caps (1) (2)	DC Bus Common Mode Caps		
5	B C D H J N P R	All, except C140 (see next page)	Two green/yellow wires connected to the Power Terminal Block rail	Green/yellow wire is connected to ground	**Solid Ground** 1. CM Cap jumper wire should be connected to ground with a metal screw. Verify. • Newer Drives - If necessary, remove the nylon screw/ spacer and insert a metal M5 x 8 screw. Torque to 3.2 N•m (28 lb•in). • Older Drives - Remove the I/O Cassette (see Installation Instructions for details). The green/yellow CM Cap jumper wire is located on the back of chassis and should be connected to ground with a metal screw. If necessary, remove the insulation from the wire terminal and connect to chassis with a metal M5 x 12 screw. Torque screw to 3.2 N•m (28 lb•in). 2. MOV/Input Filter Cap jumper wires should be connected to ground with a metal screw. Verify. If necessary, remove the nylon screw/spacer and insert a metal M5 x 12 screw. **Non-Solid Ground** 1. CM Cap jumper wire should be insulated from ground. Verify. • Newer Drives - If necessary, remove the metal screw and insert a M5 x 15 nylon screw/spacer. • Older Drives - Remove the I/O Cassette (see Installation Instructions for details). If necessary, insulate/secure jumper wire to guard against unintentional contact with chassis or components. 2. MOV/Input Filter Cap jumper wires should be insulated from ground with a nylon screw/spacer. Verify. If necessary, remove the metal screw and insert a M5 x 20 nylon screw/spacer.	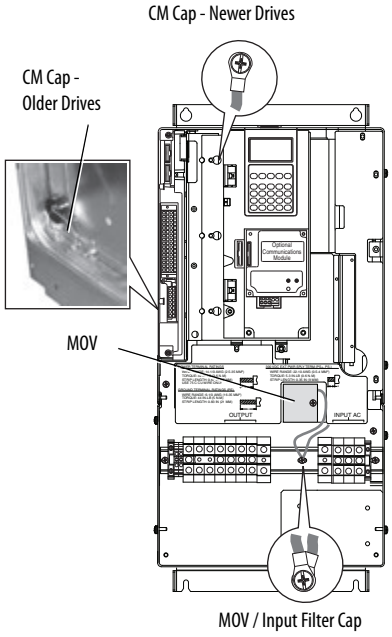

(1) AC input drives only. MOV's and input filter caps do not exist on DC input drives.
(2) When removing MOV's, the input filter capacitor must also be removed.

Frame	Voltage Code	Current Rating	Factory Default Jumper Settings		Power Source Type	
			MOV/Input Filter Caps (1) (2)	DC Bus Common Mode Caps		
6	B C D H J N P R	All	Two green/yellow wires connected to Power Terminal Block "PE"	Green/yellow wire to CM Cap Board is connected to Power Terminal Block "PE"	**Solid Ground** 1. The green/yellow CM Cap jumper wire should be connected to "PE." 2. The MOV/Input Filter Cap jumper wires should be connected to "PE." **Non-Solid Ground** 1. The green/yellow CM Cap jumper wire should be insulated from ground. If necessary, remove the jumper wire from "PE" and insulate/secure it to guard against unintentional contact with chassis or components. **Important: Do Not Remove/ Disconnect the larger green/yellow wire**. 2. MOV/Input Filter Cap jumper wires should be insulated from ground. If necessary, remove the jumper wires from "PE" and individually insulate/ secure each jumper wire to guard against unintentional contact with chassis or components.	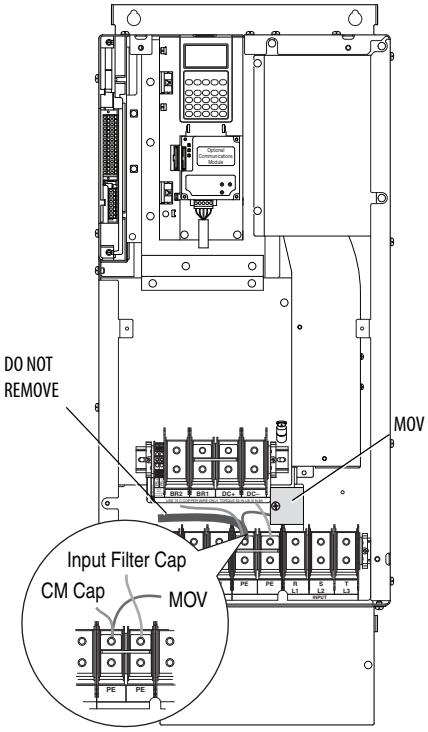
	E F T W	All	Two green/yellow wires connected to Power Terminal Block "PE" and chassis	Green/yellow wire to CM Cap Board is connected to Power Terminal Block "PE"	**Solid Ground** 1. The green/yellow CM Cap and MOV jumper wires should be connected to "PE." 2. The Input Filter Cap jumper wire (top right) should be connected to chassis ground with a metal screw. Verify. If necessary, remove the nylon screw/spacer and insert a metal M5 x 10 screw. Torque to 3.2 N•m (28 lb•in). **Non-Solid Ground** 1. The green/yellow CM Cap and MOV jumper wires should be insulated from ground. If necessary, remove them from "PE" and individually insulate/ secure each jumper wire to guard against unintentional contact with chassis or components. **Important: Do Not Remove/Disconnect the larger green/yellow wire**. 2. The Input Filter Cap jumper wire (top right) should be insulated from ground with a nylon screw/spacer. Verify. If necessary, remove the metal screw and insert a M5 x 15 nylon screw/spacer.	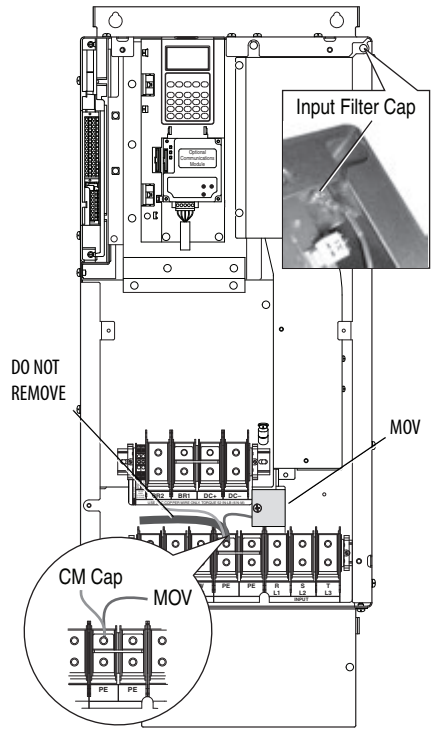

(1) AC input drives only. MOV's and input filter caps do not exist on DC input drives.
(2) When removing MOV's, the input filter capacitor must also be removed.

AC Supply Source Considerations

PowerFlex drives are suitable for use on a circuit capable of delivering up to a maximum of 200,000 rms symmetrical amperes, 600 volts with recommended s/circuit breakers.

ATTENTION: To guard against personal injury and/or equipment damage caused by improper fusing or circuit breaker selection, use only the recommended line s/circuit breakers specified in Fusing and Circuit Breakers on page 39.

If a residual current detector (RCD) is used as a system ground fault monitor, only Type B (adjustable) devices should be used to avoid nuisance tripping.

Input Power Conditioning

Certain events on the power system supplying a drive can cause component damage or shortened product life. These conditions are divided into two basic categories:

1. **All Drives**
   - The power system has power factor correction capacitors switched in and out of the system, either by the user or by the power company.
   - The power source has intermittent voltage spikes in excess of 6000 volts. These spikes could be caused by other equipment on the line or by events such as lightning strikes.
   - The power source has frequent interruptions.
2. **5 Hp or Less Drives (in addition to "1" above)**
   - The nearest supply transformer is larger than 100 kVA or the available short circuit (fault) current is greater than 100,000 A.
   - The impedance in front of the drive is less than 0.5%.

If any or all of these conditions exist, it is recommended that the user install a minimum amount of impedance between the drive and the source. This impedance could come from the supply transformer itself, the cable between the transformer and drive or an additional transformer or reactor. The impedance can be calculated using the information supplied in Wiring and Grounding Guidelines for Pulse Width Modulated (PWM) AC Drives, publication DRIVES-IN001.

Single-Phase Input Power

The PowerFlex 700S drive is typically used with a three-phase input supply. Single-phase operation of the drive is not currently rated under the UL508C listing. Rockwell Automation has verified that single-phase operation with output current derated by 50% of the three-phase ratings identified in the Fusing and Circuit Breakers tables on page 39 will meet all safety requirements.

AC Input Phase Selection (Frames 5 and 6 Only)

ATTENTION: To avoid a shock hazard, be sure that all power to the drive has been removed before performing the following.

Moving the "Line Type" jumper shown in Phase Selection Jumper and Fan Transformer Locations (Frame 5 shown) on page 30 will select single or three-phase operation. Remove plastic guard to access jumper.

IMPORTANT When selecting single-phase operation, input power must be applied to the R (L1) and S (L2) terminals only.

Selecting/Verifying Fan Voltage (Frames 5 and 6 Only)

ATTENTION: To avoid a shock hazard, be sure that all power to the drive has been removed before performing the following.

Frames 5 and 6 utilize a transformer to match the input line voltage to the internal fan voltage. If your line voltage is different than the voltage class specified on the drive nameplate, it may be necessary to change transformer taps as shown below. Common bus (DC input) drives require user supplied 120 or 240V AC to power the cooling fans. The power source is connected between "0 VAC" and the terminal corresponding to your source voltage (see Phase Selection Jumper and Fan Transformer Locations (Frame 5 shown) on page 30).

Fan VA Rating (DC Input Drives Only)

Frame	Fan Voltage *(120V or 240V)*
5	100 VA
6	138 VA

Phase Selection Jumper and Fan Transformer Locations (Frame 5 shown)

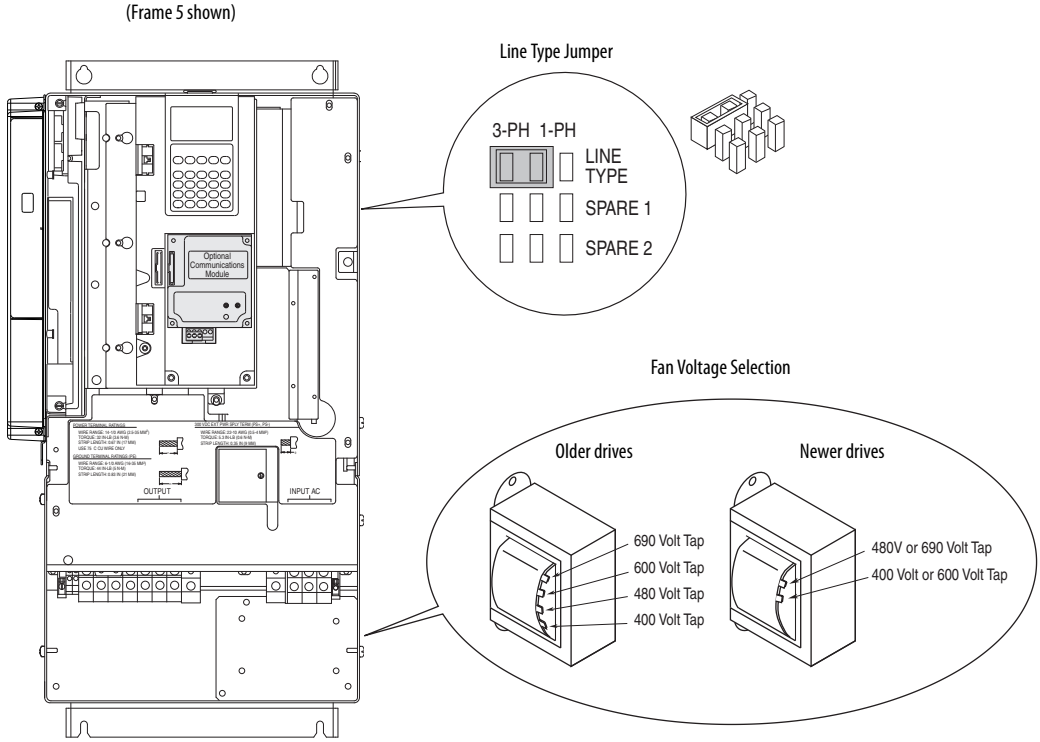

Frame 5 and 6 Transformer Tap Access

The transformer is located behind the power terminal block in the area shown in Phase Selection Jumper and Fan Transformer Locations (Frame 5 shown) on page 30. Access is gained by releasing the terminal block from the rail. To release terminal block and change tap:

1. Locate the small metal tab at the bottom of the end block.
2. Press the tab in and pull the top of the block out. Repeat for next block if desired.
3. Select appropriate transformer tap.
4. Replace block(s) in reverse order.

Important Common Bus (DC Input) Application Notes

1. If drives without internal precharge are used (Frames 5 and 6 only), then:
   - precharge capability must be provided in the system to guard against possible damage, and
   - disconnect switches Must Not be used between the input of the drive and a common DC bus without the use of an external precharge device.
2. If drives with internal precharge (Frames 1...6) are used with a disconnect switch to the common bus, then an auxiliary contact on the disconnect must be connected to a digital input of the drive. The corresponding input (parameters 825...830) must be set to "Precharge Enable". This provides the proper precharge interlock, guarding against possible damage to the drive when connected to a common DC bus.

Auxiliary Control Power Supply

An auxiliary power supply can be used to keep the 700S control assembly energized when input power is de-energized. This allows the main control board, DriveLogix controller and any feedback option cards to continue operation. Refer to Power Terminal Block Specifications on page 34 for connection information. You must set bit 17 "Aux Pwr Sply" of Par 153 [Control Options] to enable this feature. Refer to the PowerFlex 700S Auxiliary Control Power Supply (20-24V-AUX1), Installation Instructions, publication 20D-IN021, for more information.

Accessing the Terminals

Opening the Drive Cover

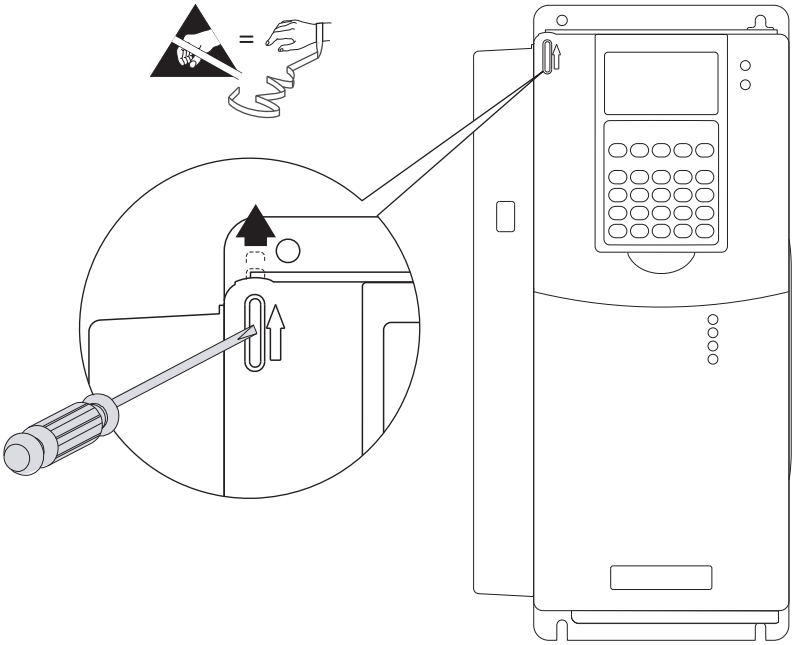

Frames 1…4

Locate the slot in the upper left corner. Slide the locking tab up and swing the cover open. Special hinges allow the cover to move away from the drive and lay on top of an adjacent drive (if present).

Frame 5

Slide the locking tab up, loosen the right-hand cover screw and remove the cover.

Frame 6

Loosen the two screws at the bottom of the bottom cover and carefully slide the cover down and out. Loosen the two screws at top of the top cover and remove the cover.

Removing the Cassette

Task	Description
A	Open the door of the power structure and disconnect the cables that connect to the main board. Depress the locking tab on connector before disconnecting cables.
B	Loosen the screws on the face of the cassette.
C	Remove the cassette.

Removing the Side Covers

Task	Description
A	Loosen the screws on the face of the front cover and remove the cover.
B	Loosen the screws on the side of rear cover and remove the cover.

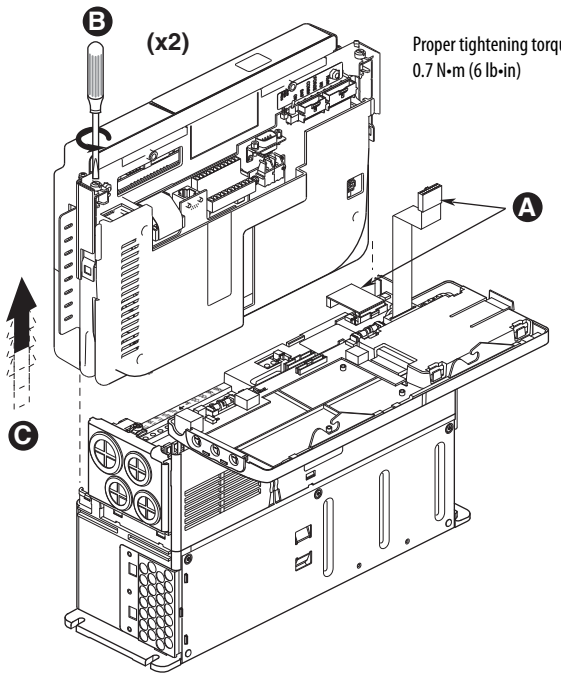

Proper tightening torque for reassembly is 0.7 N•m (6 lb•in)

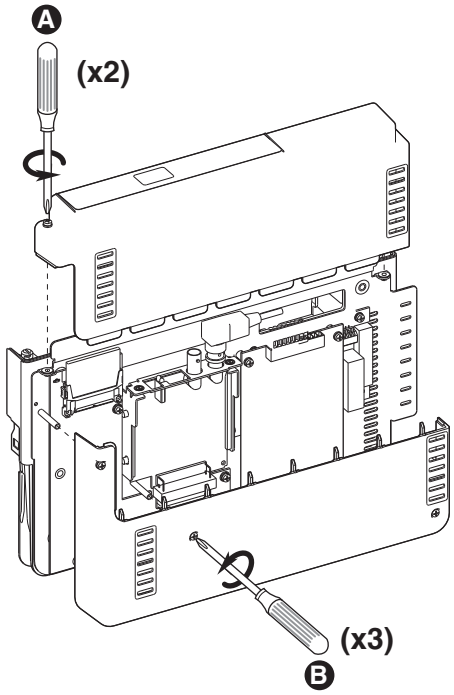

Cable Entry Plate Removal

If additional wiring access is needed, the cable entry plate on frame 1...3 drives can be removed. Loosen the screws securing the plate to the chassis and slide the plate down and off the drive.

IMPORTANT Removing the cable entry plate on frame 1…3 limits the maximum surrounding air temperature to 40 °C (104 °F).

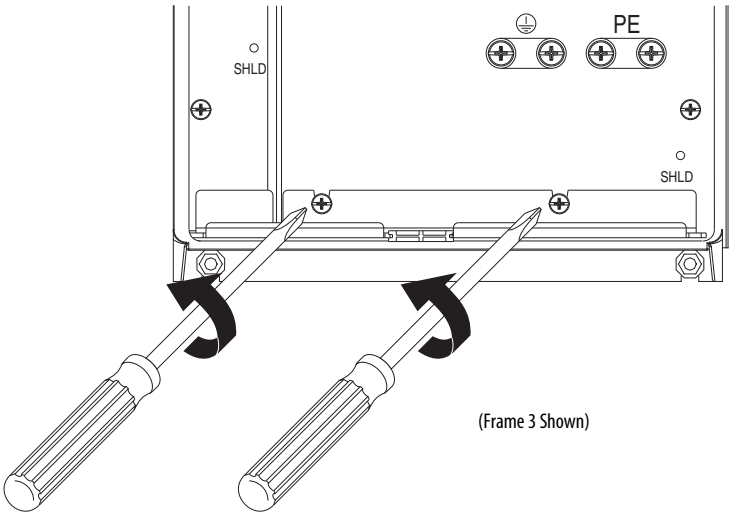

Power Wiring Access Panel Removal

ATTENTION: Removing the access panel/cover exposes dangerous voltages on the terminals and negates the enclosure type rating. Replace the access panel/cover when service is complete. Failure to comply may result in personal injury or equipment damage.

Frame	**Removal Procedure** *(Replace when wiring is complete)*
1, 2, & 6	The access panel is part of the front cover, see Opening the Drive Cover on page 32.
3	Open front cover and gently tap/slide the access panel down and out.
4	Loosen the 4 screws and remove the access panel.
5	Remove the front cover (see Opening the Drive Cover on page 32) and gently tap/slide the access panel up and out.

Power Wire Recommendations

Type		Description	Min Insulation Rating
Power (1)(2)	Standard	• Four tinned copper conductors with XLPE insulation. • Copper braid/aluminum foil combination shield and tinned copper drain wire. • PVC jacket.	600V, 75 °C (167 °F)

(1) Control and signal wires should be separated from power wires by at least 0.3 meters (1 foot).
(2) The use of shielded wire for AC input power may not be necessary but is always recommended.

Power Terminal Block Specifications

Refer to illustrations on pages 35 and 36 for terminal block locations.

No.	Name	Frame	Description	Wire Size Range(3)		Torque		Terminal Bolt Size(6)
				Maximum	Minimum	Maximum	Recommended	
1	Power Terminal Block	1	Input power and motor connections	4.0 mm^2 (10 AWG)	0.5 mm^2 (22 AWG)	1.7 N•m (15 lb•in)	0.8 N•m (7 lb•in)	—
		2	Input power and motor connections	10.0 mm^2 (6 AWG)	0.8 mm^2 (18 AWG)	1.7 N•m (15 lb•in)	1.4 N•m (12 lb•in)	—
		3	Input power and motor connections	25.0 mm^2 (3 AWG)	2.5 mm^2 (14 AWG)	3.6 N•m (32 lb•in)	1.8 N•m (16 lb•in)	—
			BR1, BR2	10.0 mm^2 (6 AWG)	0.8 mm^2 (18 AWG)	1.7 N•m (15 lb•in)	1.4 N•m (12 lb•in)	—
		4	Input power and motor connections	35.0 mm^2 (1/0 AWG)	10 mm^2 (8 AWG)	4.0 N•m (24 lb•in)	4.0 N•m (24 lb•in)	—
		5 (75 Hp)(1)	R, S, T, BR1, BR2, DC+, DC-, U, V and W	50.0 mm^2 (1/0 AWG)	2.5 mm^2 (14 AWG)	See Note (5)	See Note (1)	—
			PE	50.0 mm^2 (1/0 AWG)	4.0 mm^2 (12 AWG)			—
		5 (100 Hp)(1)	R, S, T, DC+, DC-, U, V and W	70.0 mm^2 (2/0 AWG)	16.0 mm^2 (6 AWG)			—
			BR1, BR2	50.0 mm^2 (1/0 AWG)	2.5 mm^2 (14 AWG)			—
			PE	50.0 mm^2 (1/0 AWG)	4.0 mm^2 (12 AWG)			—
		6	Input power and motor connections	120.0 mm^2 (4/0 AWG)(4)	2.5 mm^2 (14 AWG)	6 N•m (52 lb•in)	6 N•m (52 lb•in)	—
2	SHLD Terminal	1-6	Terminating point for wiring shields	—	—	1.6 N•m (14 lb•in)	1.6 N•m (14 lb•in)	M12
3	AUX Terminal Block	1-4	Auxiliary Control Voltage (2) PS+, PS-	1.5 mm^2 (16 AWG)	0.2 mm^2 (24 AWG)	—	—	—
		5-6		4.0 mm^2 (10 AWG)	0.5 mm^2 (22 AWG)	0.6 N•m (5.3 lb•in)	0.6 N•m (5.3 lb•in)	—
4	Fan Terminal Block (Common Bus Only)	5-6	User Supplied Fan Voltage 0V AC, 120V AC, 240V AC	4.0 mm^2 (10 AWG)	0.5 mm^2 (22 AWG)	0.6 N•m (5.3 lb•in)	0.6 N•m (5.3 lb•in)	M10

(1) Not all terminals present on all drives.
(2) Auxiliary power: UL Installation - 300V DC, ±10%, Non UL Installation - 270…600V DC, ±10%. Frame 1…6, 100 W.
(3) Maximum/minimum sizes that the terminal block will accept - these are not recommendations.
(4) If necessary, two wires can be used in parallel to any of these terminals using two lugs.
(5) Refer to the terminal block label inside the drive.
(6) Apply counter torque to the nut on the other side of terminations when tightening or loosening the terminal bolt to avoid damage to the terminal.

Typical Power Terminal Block Locations

Frame 1

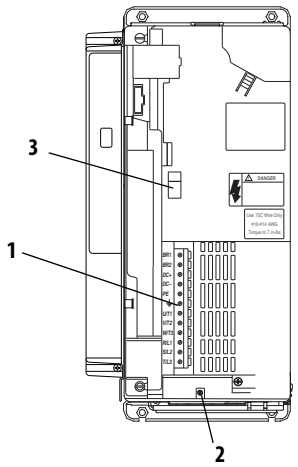

Frame 2

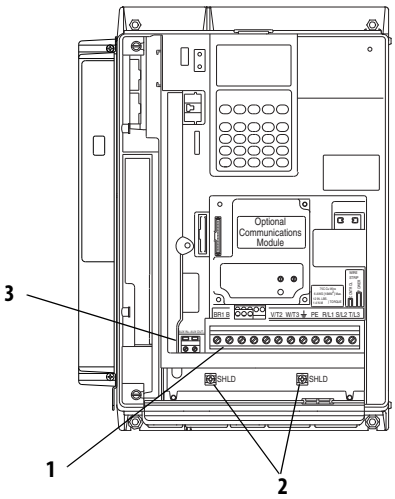

Frames 3 & 4

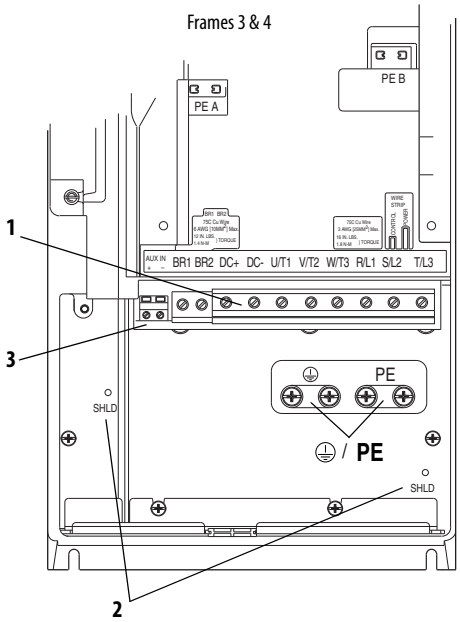

Frame 5

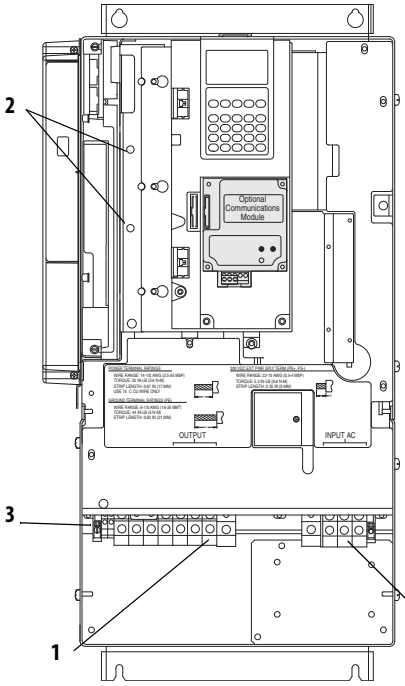

Frame 6

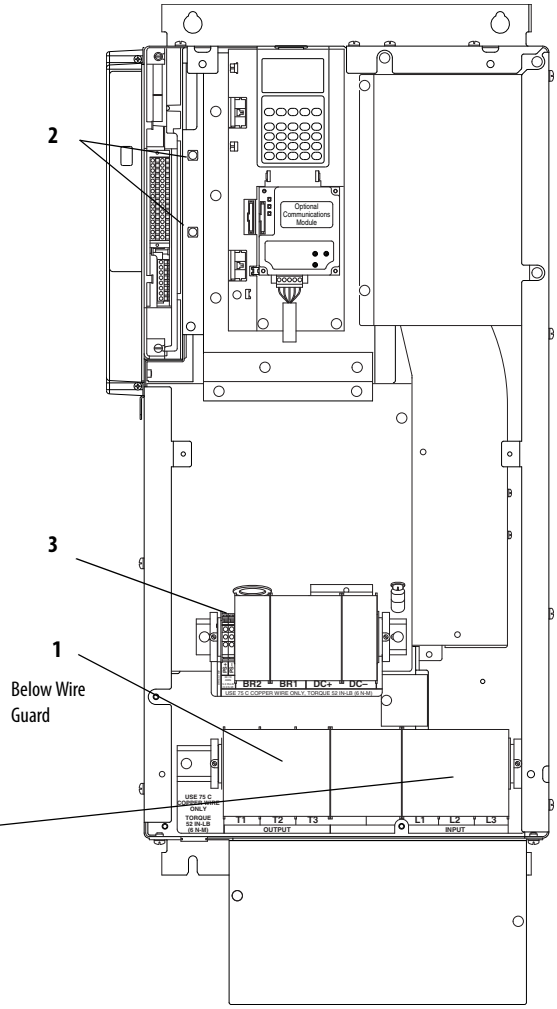

Power Terminal Blocks

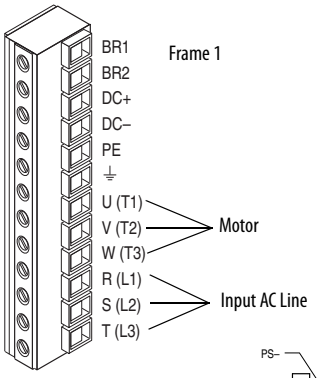

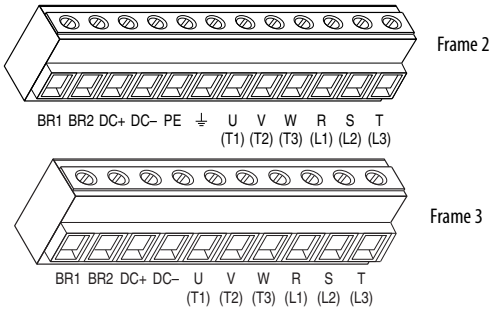

Frame 5 - 75 HP, Normal Duty
480V AC Input

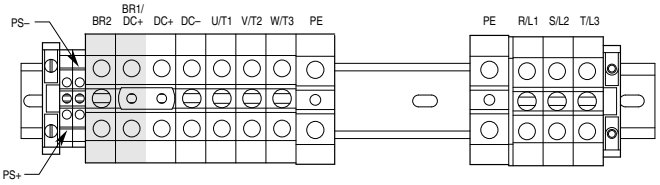

Frame 5 - 100 HP, Normal Duty
480V AC Input

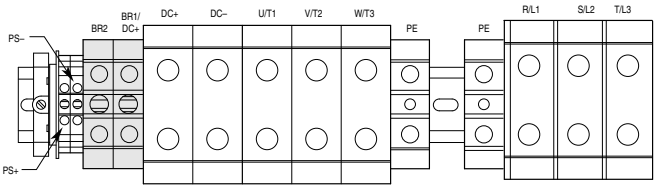

Frame 5 - 75 HP, Normal Duty
650V DC Input

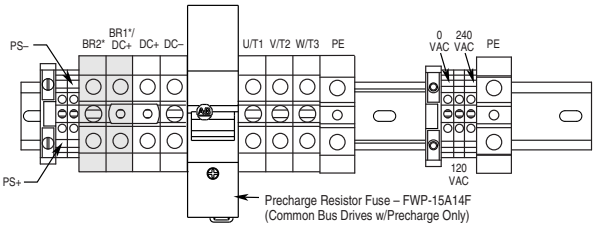

Frame 5 - 100 HP, Normal Duty
650V DC Input

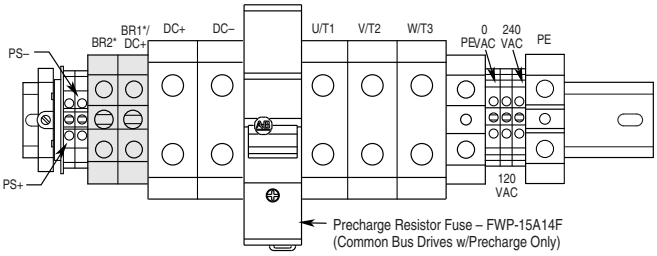

Frame 6 - 150 HP, Normal Duty
480 V AC Input

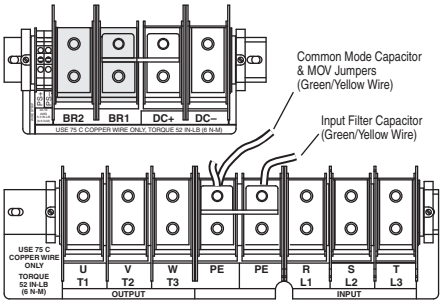

Frame 6 - 150 HP, Normal Duty
650V DC Input

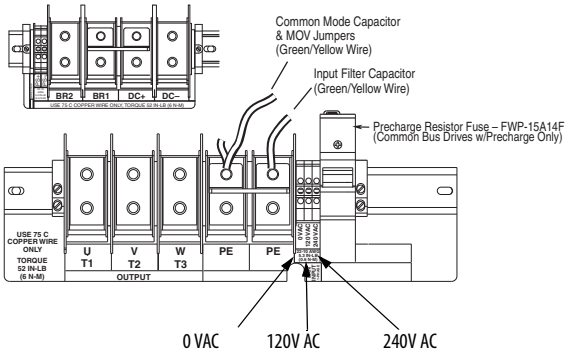

Shaded terminals (BR1 & BR2) are only present on drives ordered with the brake option.

Terminal	Description	Notes
BR1	DC Brake (+)	Dynamic Brake Resistor Connection (+)
BR2	DC Brake (–)	Dynamic Brake Resistor Connection (–)
DC+	DC Bus (+)	DC Input Power or Dynamic Brake Chopper
DC–	DC Bus (–)	DC Input Power or Dynamic Brake Chopper
PE	PE Ground	Refer to Typical Power Terminal Block Locations on page 35 for location on 3 Frame drives
⏚	Motor Ground	Refer to Typical Power Terminal Block Locations on page 35 for location on 3 Frame drives
U	U (T1)	To motor
V	V (T2)	To motor
W	W (T3)	To motor
R	R (L1)	AC Line Input Power
S	S (L2)	AC Line Input Power
T	T (L3)	AC Line Input Power

Dynamic Brake Resistor Considerations

ATTENTION: The drive does not offer protection for externally mounted brake resistors. A risk of fire exists if external braking resistors are not protected. External resistor packages must be self-protected from over temperature or a circuit equivalent to the one shown below must be supplied.

External Brake Resistor Circuitry

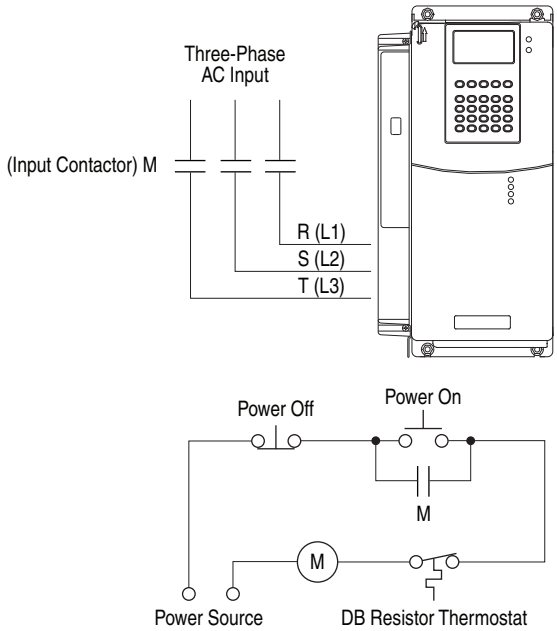

Using Input/Output Contactors

It is recommended that the auxiliary relay of the output contactor (when used) be wired in series with Digital Input 6 and that Digital Input 6 be configured as a hardware enable input. See Hardware Enable Circuitry on page 48 for more information.

ATTENTION: A contactor or other device that routinely disconnects and reapplies the AC line to the drive to start and stop the motor can cause drive hardware damage. The drive is designed to use control input signals that start and stop the motor. If an input device is used occasionally, an auxiliary contact on that device should also be wired to a digital input programmed as a "Enable" function. The input device must not exceed one operation per minute or drive damage will occur.

ATTENTION: The drive start/stop control circuitry includes solid state components. If hazards due to accidental contact with moving machinery or unintentional flow of liquid, gas or solids exist, an additional hard-wired stop circuit may be required to remove the AC line to the drive. When the AC line is removed, any inherent regenerative braking effect that might be present is lost - the motor coasts to a stop. An auxiliary braking method may be required.

ATTENTION: To guard against drive damage when using output contactors, the following information must be read and understood. One or more output contactors can be installed between the drive and motor(s) for the purpose of disconnecting or isolating certain motors/loads. If a contactor is opened while the drive is operating, power is removed from the respective motor, but the drive continues to produce voltage at the output terminals. In addition, reconnecting a motor to an active drive (by closing the contactor) could produce excessive current that may cause the drive to fault. If any of these conditions are determined to be undesirable or unsafe, wire an auxiliary contact on the output contactor to a drive digital input programmed as "Enable." This causes the drive to execute a coast-to-stop (cease output) whenever an output contactor is opened.

Using PowerFlex 700S Drives with Regenerative Power Units

If a Regenerative unit (that is, 1336 REGEN) is used as a bus supply or a brake, the common mode capacitors should be disconnected (see Power Jumpers on page 22 for details).

Regenerative Unit to Drive Connections

Regenerative Brake Mode

Frame(s)	Terminals	
	1336 REGEN	PowerFlex 700S
1…4	DC+ & DC-	BR1 & DC-
5 & 6	DC+ & DC-	DC+ & DC-

Regenerative Bus Supply Mode

Frame(s)	Terminals	
	1336 REGEN	PowerFlex 700S
1…4	DC+ & DC-	DC+ & DC-
5 & 6	DC+ & DC-	DC+ & DC- of Common Bus Drives

Electronic Motor Overload Protection

Provides class 10 motor overload protection according to NEC article 430 and motor over-temperature protection according to NEC article 430.126 (A)(2). UL 508C File E59272.

Short Circuit Current Rating

Maximum short circuit current rating: 200,000 Amps symmetrical.

Branch Circuit Short Circuit Protection

Integral solid state short circuit protection does not provide branch circuit protection. Branch circuit protection must be provided in accordance with the National Electrical Code and any additional local codes, or the equivalent.

Fusing and Circuit Breakers

The tables on the following pages provide recommended AC line input and circuit breaker information. See Fusing and Circuit Breakers below for UL and IEC requirements. Sizes listed are the recommended sizes based on 40 °C (104 °F) and the U.S. NEC. Other country, state, or local codes can require different ratings. Tables with DC link recommendations for DC input drives are also provided.

Fusing

The recommend types are listed below. If available current ratings do not match those listed in the tables provided, chose the next higher rating.

- IEC – BS88 (British Standard) Parts 1 & 2, EN60269-1, Parts 1 & 2(1), type gG or equivalent should be used.

UL – UL Class CC, T, RK1, J, or L should be used.

(1) Typical designations include, but may not be limited to the following; Parts 1 & 2: AC, AD, BC, BD, CD, DD, ED, EFS, EF, FF, FG, GF, GG, GH.

Circuit Breakers

The "non-" listings in the following tables include inverse time circuit breakers, instantaneous trip circuit breakers (motor circuit protectors) and 140M self-protected combination motor controllers. If one of these is chosen as the desired protection method, the following requirements apply:

- IEC – Both types of circuit breakers and 140M self-protected combination motor controllers are acceptable for IEC installations.
- UL - Only inverse time circuit breakers and the specified 140M self-protected combination motor controllers are acceptable for UL installations.

208 Volt AC Input Frames 1…6 Drive Protection Devices

Drive Cat. No.	Frame	kW Rating		Input Ratings		Dual Element Time Delay Fuse		Non-Time Delay Fuse		Circuit Breaker(3)	Motor Circuit Protector(5)	140M Motor Starter with Adjustable Current Range(6)(7)			
		ND	HD	Amps	kVA	Min(1)	Max(2)	Min(1)	Max(2)	Max(4)	Max(5)	Available Cat. No.s(8)			Minimum Enclosure Volume (in.^{3})(9)
20DB4P2	1	0.75	0.55	3.7	1.3	6	10	6	17.5	15	7	M-C2E-B63	M-D8E-B63	–	7269
20DB6P8	1	1.5	1.1	6.8	2.4	10	15	10	30	30	15	M-C2E-C10	M-D8E-C10	M-F8E-C10	7269
20DB9P6	1	2.2	1.5	9.5	3.4	12	20	12	40	40	15	M-C2E-C16	M-D8E-C16	M-F8E-C16	7269
20DB015	1	4.0	3.0	15.7	5.7	20	35	20	70	70	30	M-C2E-C20	M-D8E-C20	M-F8E-C20	7269
20DB022	1	5.5	4.0	23.0	8.3	30	50	30	100	100	30	–	M-D8E-C25	M-F8E-C25	7269
20DB028	2	7.5	5.5	29.6	10.7	40	70	40	125	125	50	–	–	M-F8E-C32	7269
20DB042	3	11	7.5	44.5	16.0	60	100	60	175	175	70	–	–	M-F8E-C45	13630
20DB052	3	15	11	51.5	18.6	80	125	80	200	200	100	–	–	–	–
20DB070	4	18.5	15	72	25.9	90	175	90	300	300	100	–	–	–	–
20DB080	4	22	18.5	84.7	30.5	110	200	110	350	350	150	–	–	–	–
20DB104	5	30	–	113	40.7	150	250	150	475	350	150	–	–	–	–
		–	22	84.7	30.5	125	200	125	350	300	150	–	–	–	–
20DB130	5	37	–	141	44.1	175	275	175	500	375	250	–	–	–	–
		–	30	113	35.3	125	225	125	400	300	150	–	–	–	–
20DB154	6	45	–	167	60.1	225	350	225	500	500	250	–	–	–	–
		–	37	141	50.9	200	300	200	500	450	250	–	–	–	–
20DB192	6	55	–	208	75.0	300	450	300	600	600	400	–	–	–	–
		–	45	167	60.1	225	350	225	500	500	250	–	–	–	–
20DB260	6	66	–	255	96.7	300	575	300	750	750	400	–	–	–	–
		–	55	199	71.7	225	450	225	600	600	400	–	–	–	–

(1) Minimum protection device size is the lowest rated device that supplies maximum protection without nuisance tripping.
(2) Maximum protection device size is the highest rated device that supplies drive protection. For US NEC, minimum size is 125% of motor FLA. Ratings shown are maximum.
(3) Circuit Breaker - inverse time breaker. For US NEC, minimum size is 125% of motor FLA. Ratings shown are maximum.
(4) Maximum allowable rating by US NEC. Exact size must be chosen for each installation.
(5) Motor Circuit Protector - instantaneous trip circuit breaker. For US NEC minimum size is 125% of motor/drive FLA. Ratings shown are suggested. Instantaneous trip settings must be set to US NEC code. Not to exceed 1300% FLA.
(6) Bulletin 140M with adjustable current range should have the current trip set to the minimum range that the device will not trip.
(7) Manual Self-Protected (Type E) Combination Motor Controller, UL listed for 208 Wye or Delta, 240 Wye or Delta, 480Y/277 or 600Y/ 347. Not UL listed for use on 480V or 600V Delta/Delta, corner ground, or high-resistance ground systems.
(8) The AIC ratings of the Bulletin 140M Motor Protector Circuit Breakers may vary. See Bulletin 140M Motor Protection Circuit Breakers Application Ratings.
(9) When using a Manual Self-Protected (Type E) Combination Motor Controller, the drive must be installed in a ventilated or non-ventilated enclosure with the minimum volume specified in this column. Application specific thermal considerations may require a larger enclosure.

240 Volt AC Input Frames 1…6 Drive Protection Devices

Drive Cat. No.	Frame	HP Rating		Input Ratings		Dual Element Time Delay Fuse		Non-Time Delay Fuse		Circuit Breaker (3)	Motor Circuit Protector (5)	140M Motor Starter with Adjustable Current Range (6)(7)			
		ND	HD	Amps	kVA	Min (1)	Max (2)	Min (2)	Max (3)	Max (4)	Max (5)	Available Cat. No.s (8)			Minimum Enclosure Volume (in.^{3}) (9)
20DB4P2	1	1	0.75	3.3	1.4	5	8	5	15	15	7	M-C2E-B63	M-D8E-B63	–	7269
20DB6P8	1	2	1.5	5.9	2.4	10	15	10	25	25	15	M-C2E-C10	M-D8E-C10	M-F8E-C10	7269
20DB9P6	1	3	2	8.3	3.4	12	20	12	35	35	15	M-C2E-C10	M-D8E-C10	M-F8E-C10	7269
20DB015	1	5	3	13.7	5.7	20	30	20	60	60	30	M-C2E-C16	M-D8E-C16	M-F8E-C16	7269
20DB022	1	7.5	5	19.9	8.3	25	50	25	80	80	30	–	M-D8E-C25	M-F8E-C25	7269
20DB028	2	10	7.5	25.7	10.7	35	60	35	100	100	50	–	–	M-F8E-C32	7269
20DB042	3	15	10	38.5	16.0	50	90	50	150	150	50	–	–	M-F8E-C45	13630
20DB052	3	20	15	47.7	19.8	60	100	60	200	200	100	–	–	–	–
20DB070	4	25	20	64.2	26.7	90	150	90	275	275	100	–	–	–	–
20DB080	4	30	25	73.2	30.5	100	180	100	300	300	100	–	–	–	–
20DB104	5	40	–	98	40.6	125	225	125	400	300	150	–	–	–	–
		–	30	73	30.5	100	175	100	300	300	100	–	–	–	–
20DB130	5	50	–	122	50.7	175	275	175	500	375	250	–	–	–	–
		–	40	98	40.6	125	225	125	400	300	150	–	–	–	–
20DB154	6	60	–	145	60.1	200	300	200	600	450	250	–	–	–	–
		–	50	122	50.7	175	275	175	500	375	250	–	–	–	–
20DB192	6	75	–	180	74.9	225	400	225	600	575	250	–	–	–	–
		–	60	145	60.1	200	300	200	600	450	250	–	–	–	–
20DB260	6	100	–	233	96.8	300	575	300	750	750	400	–	–	–	–
		–	75	169	74.9	225	450	225	600	600	400	–	–	–	–

(1) Minimum protection device size is the lowest rated device that supplies maximum protection without nuisance tripping.
(2) Maximum protection device size is the highest rated device that supplies drive protection. For US NEC, minimum size is 125% of motor FLA. Ratings shown are maximum.
(3) Circuit Breaker - inverse time breaker. For US NEC, minimum size is 125% of motor FLA. Ratings shown are maximum.
(4) Maximum allowable rating by US NEC. Exact size must be chosen for each installation.
(5) Motor Circuit Protector - instantaneous trip circuit breaker. For US NEC minimum size is 125% of motor/drive FLA. Ratings shown are suggested. Instantaneous trip settings must be set to US NEC code. Not to exceed 1300% FLA.
(6) Bulletin 140M with adjustable current range should have the current trip set to the minimum range that the device will not trip.
(7) Manual Self-Protected (Type E) Combination Motor Controller, UL listed for 208 Wye or Delta, 240 Wye or Delta, 480Y/277 or 600Y/ 347. Not UL listed for use on 480V or 600V Delta/Delta, corner ground, or high-resistance ground systems.
(8) The AIC ratings of the Bulletin 140M Motor Protector Circuit Breakers may vary. See Bulletin 140M Motor Protection Circuit Breakers Application Ratings.
(9) When using a Manual Self-Protected (Type E) Combination Motor Controller, the drive must be installed in a ventilated or non-ventilated enclosure with the minimum volume specified in this column. Application specific thermal considerations may require a larger enclosure.

400 Volt AC Input Frames 1…6 Drive Protection Devices

Drive Cat. No.	Frame	kW Rating		Input Ratings		Dual Element Time Delay Fuse		Non-Time Delay Fuse		Circuit Breaker (5)	Motor Circuit Protector (7)	140M Motor Starter with Adjustable Current Range (8)(9)			
		ND	HD	Amps	kVA	Min (3)	Max (4)	Min (5)	Max (6)	Max (6)	Max (8)	Available Cat. No.s (10)			Minimum Enclosure Volume (in.^{3}) (11)
20DC2P1	1	0.75	0.55	1.8	1.3	3	6	3	8	15	3	M-C2E-B25	M-D8E-B25	–	7269
20DC3P5	1	1.5	1.1	3.2	2.2	6	7	6	12	15	7	M-C2E-B40	M-D8E-B40	–	7269
20DC5P0	1	2.2	1.5	4.6	3.2	6	10	6	20	20	7	M-C2E-B63	M-D8E-B63	–	7269
20DC8P7	1	4	3.0	7.9	5.5	15	17.5	15	30	30	15	M-C2E-C10	M-D8E-C10	M-F8E-C10	7269
20DC011	1	5.5	4	10.8	7.5	15	25	15	45	45	15	M-C2E-C16	M-D8E-C16	M-F8E-C16	7269
20DC015	1	7.5	5.5	14.4	10.0	20	30	20	60	60	20	M-C2E-C20	M-D8E-C20	M-F8E-C20	7269
20DC022	1	11	7.5	20.6	14.3	30	45	30	80	80	30	–	M-D8E-C25	M-F8E-C25	7269
20DC030	2	15	11	28.4	19.7	35	60	35	120	120	50	–	–	M-F8E-C32	7269
20DC037	2	18.5	15	35.0	24.3	45	80	45	125	125	50	–	–	M-F8E-C45	7269
20DC043	3	22	18.5	40.7	28.2	60	90	60	150	150	60	–	–	–	–
20DC056	3	30	22	53	36.7	70	125	70	200	200	100	–	–	–	–
20DC072	3	37	30	68.9	47.8	90	150	90	250	250	100	–	–	–	–
20DC085 (1)	4	45	–	81.4	56.4	110	200	110	300	300	150	–	–	–	–
		–	37	68.9	47.8	90	175	90	275	300	100	–	–	–	–
20DC105	5	55	–	100.5	69.6	125	225	125	400	300	150	–	–	–	–
		–	45	81.4	56.4	110	175	110	300	300	150	–	–	–	–
20DC125	5	55	–	121.1	83.9	150	275	150	500	375	250	–	–	–	–
		–	45	101	63.7	125	200	125	375	375	150	–	–	–	–

400 Volt AC Input Frames 1…6 Drive Protection Devices (continued)

Drive Cat. No.	Frame	kW Rating		Input Ratings		Dual Element Time Delay Fuse		Non-Time Delay Fuse		Circuit Breaker (5)	Motor Circuit Protector (7)	140M Motor Starter with Adjustable Current Range (8)(9)			
		ND	HD	Amps	kVA	Min (3)	Max (4)	Min (5)	Max (6)	Max (6)	Max (8)	Available Cat. No.s (10)			Minimum Enclosure Volume (in.3) (11)
20DC140	5	75	–	135.6	94	200	300	200	400	400	250	–	–	–	–
		–	55	121	69.6	150	225	150	300	300	150	–	–	–	–
20DC170	6	90	–	164.6	114	250	375	250	600	500	250	–	–	–	–
		–	75	136	94	200	300	200	550	400	250	–	–	–	–
20DC205 (2)	6	110	–	198.5	138	250	450	250	600	600	400	–	–	–	–
		–	90	164	114	250	375	250	600	500	250	–	–	–	–
20DC260	6	132	–	254.7	166	350	550	350	750	750	400	–	–	–	–
		–	110	199	138	250	450	250	600	600	400	–	–	–	–

(1) 20DC085 current rating is limited to 45 degrees C ambient.
(2) 20DC205 current rating is limited to 40 degrees C ambient.
(3) Minimum protection device size is the lowest rated device that supplies maximum protection without nuisance tripping.
(4) Maximum protection device size is the highest rated device that supplies drive protection. For US NEC, minimum size is 125% of motor FLA. Ratings shown are maximum.
(5) Circuit Breaker - inverse time breaker. For US NEC, minimum size is 125% of motor FLA. Ratings shown are maximum.
(6) Maximum allowable rating by US NEC. Exact size must be chosen for each installation.
(7) Motor Circuit Protector - instantaneous trip circuit breaker. For US NEC minimum size is 125% of motor/drive FLA. Ratings shown are suggested. Instantaneous trip settings must be set to US NEC code. Not to exceed 1300% FLA.
(8) Bulletin 140M with adjustable current range should have the current trip set to the minimum range that the device will not trip.
(9) Manual Self-Protected (Type E) Combination Motor Controller, UL listed for 208 Wye or Delta, 240 Wye or Delta, 480Y/277 or 600Y/ 347. Not UL listed for use on 480V or 600V Delta/Delta, corner ground, or high-resistance ground systems.
(10) The AIC ratings of the Bulletin 140M Motor Protector Circuit Breakers may vary. See Bulletin 140M Motor Protection Circuit Breakers Application Ratings.
(11) When using a Manual Self-Protected (Type E) Combination Motor Controller, the drive must be installed in a ventilated or non-ventilated enclosure with the minimum volume specified in this column. Application specific thermal considerations may require a larger enclosure.

480 Volt AC Input Frames 1…6 Drive Protection Devices

Drive Cat. No.	Frame	HP Rating		Input Ratings		Dual Element Time Delay Fuse		Non-Time Delay Fuse		Circuit Breaker (3)	Motor Circuit Protector (5)	140M Motor Starter with Adjustable Current Range (6)(7)			
		ND	HD	Amps	kVA	Min (1)	Max (2)	Min (3)	Max (4)	Max (4)	Max (6)	Available Cat. No.s (8)			Minimum Enclosure Volume (in.3) (9)
20DD2P1	1	1	0.75	1.6	1.4	3	6	3	8	15	3	M-C2E-B25	–	–	7269
20DD3P4	1	2	1.5	2.6	2.2	4	8	4	12	15	7	M-C2E-B40	M-D8E-B40	–	7269
20DD5P0	1	3	2	3.9	3.2	6	10	6	20	20	7	M-C2E-B63	M-D8E-B63	–	7269
20DD8P0	1	5	3	6.9	5.7	10	15	10	30	30	15	M-C2E-C10	M-D8E-C10	M-F8E-C10	7269
20DD011	1	7.5	5	9.5	7.9	15	20	15	40	40	15	M-C2E-C16	M-D8E-C16	M-F8E-C16	7269
20DD014	1	10	7.5	12.5	10.4	17.5	30	17.5	50	50	20	M-C2E-C16	M-D8E-C16	M-F8E-C16	7269
20DD022	1	15	10	19.9	16.6	25	50	25	80	80	30	–	M-D8E-C25	M-F8E-C25	7269
20DD027	2	20	15	24.8	20.6	35	60	35	100	100	50	–	–	M-F8E-C32	7269
20DD034	2	25	20	31.2	25.9	40	70	40	125	125	50	–	–	M-F8E-C45	7269
20DD040	3	30	25	36.7	30.5	50	90	50	150	150	50	–	–	M-F8E-C45	13630
20DD052	3	40	30	47.7	39.7	60	110	60	200	200	70	–	–	–	–
20DD065	3	50	40	59.6	49.6	80	125	80	250	250	100	–	–	–	–
20DD077	4	60	–	72.3	60.1	100	170	100	300	300	100	–	–	–	–
		–	50	59.6	49.6	80	125	80	250	250	100	–	–	–	–
20DD096	5	75	–	90.1	74.9	125	200	125	350	350	125	–	–	–	–
		–	60	72.3	60.1	100	170	100	300	300	100	–	–	–	–
20DD125	5	100	–	117	97.6	150	250	150	500	375	150	–	–	–	–
		–	75	90.1	74.9	125	200	125	350	350	125	–	–	–	–
20DD156	6	125	–	146.5	121.7	200	350	200	600	450	250	–	–	–	–
		–	100	131	97.6	175	250	175	500	375	250	–	–	–	–
20DD180	6	150	–	169	140.5	225	400	225	600	500	250	–	–	–	–
		–	125	147	121.7	200	350	200	600	450	250	–	–	–	–
20DD248	6	200		232.8	188	300	550	300	700	700	400	–	–	–	–
			150	169	140.5	225	400	225	600	500	250	–	–	–	–

(1) Minimum protection device size is the lowest rated device that supplies maximum protection without nuisance tripping.
(2) Maximum protection device size is the highest rated device that supplies drive protection. For US NEC, minimum size is 125% of motor FLA. Ratings shown are maximum.
(3) Circuit Breaker - inverse time breaker. For US NEC, minimum size is 125% of motor FLA. Ratings shown are maximum.

(4) Maximum allowable rating by US NEC. Exact size must be chosen for each installation.
(5) Motor Circuit Protector - instantaneous trip circuit breaker. For US NEC minimum size is 125% of motor/drive FLA. Ratings shown are suggested. Instantaneous trip settings must be set to US NEC code. Not to exceed 1300% FLA.
(6) Bulletin 140M with adjustable current range should have the current trip set to the minimum range that the device will not trip.
(7) Manual Self-Protected (Type E) Combination Motor Controller, UL listed for 208 Wye or Delta, 240 Wye or Delta, 480Y/277 or 600Y/ 347. Not UL listed for use on 480V or 600V Delta/Delta, corner ground, or high-resistance ground systems.
(8) The AIC ratings of the Bulletin 140M Motor Protector Circuit Breakers may vary. See Bulletin 140M Motor Protection Circuit Breakers Application Ratings.
(9) When using a Manual Self-Protected (Type E) Combination Motor Controller, the drive must be installed in a ventilated or non-ventilated enclosure with the minimum volume specified in this column. Application specific thermal considerations may require a larger enclosure.

600 Volt AC Input Frames 1…6 Drive Protection Devices

Drive Cat. No.	Frame	HP Rating		Input Ratings		Dual Element Time Delay Fuse		Non-Time Delay Fuse		Circuit Breaker (3)	Motor Circuit Protector (5)	140M Motor Starter with Adjustable Current Range (6)(7)			
		ND	HD	Amps	kVA	Min (1)	Max (2)	Min (3)	Max (4)	Max (4)	Max (6)	Available Cat. No.s (8)			Minimum Enclosure Volume (in.3) (9)
20DE1P7	1	1	0.75	1.3	1.4	2	4	2	6	15	3	M-C2E-B16	–	–	7269
20DE2P7	1	2	1.5	2.1	2.1	3	6	3	10	15	3	M-C2E-B25	–	–	7269
20DE3P9	1	3	2	3.0	3.1	6	9	6	15	15	7	M-C2E-B40	M-D8E-B40	–	7269
20DE6P1	1	5	3	5.3	5.5	9	12	9	20	20	15	–	M-D8E-B63	–	7269
20DE9P0	1	7.5	5	7.8	8.1	10	20	10	35	30	15	–	M-D8E-C10	M-F8E-C10	7269
20DE011	1	10	7.5	9.9	10.2	15	25	15	40	40	15	–	M-D8E-C10	M-F8E-C10	7269
20DE017	1	15	10	15.4	16.0	20	40	20	60	50	20	–	M-D8E-C16	M-F8E-C16	7269
20DE022	2	20	15	20.2	21.0	30	50	30	80	80	30	–	–	M-F8E-C25	7269
20DE027	2	25	20	24.8	25.7	35	60	35	100	100	50	–	–	M-F8E-C25	7269
20DE032	3	30	25	29.4	30.5	40	70	40	125	125	50	–	–	M-F8E-C32	13630
20DE041	3	40	30	37.6	39.1	50	90	50	150	150	100	–	–	–	–
20DE052	3	50	40	47.7	49.6	60	110	60	200	200	100	–	–	–	–
20DE062	4	60	50	58.2	60.5	80	125	80	225	225	100	–	–	–	–
20DE077	5	75	–	72.3	75.1	90	150	90	300	300	100	–	–	–	–
		–	60	58.2	60.5	90	125	90	250	250	100	–	–	–	–
20DE099	5	100	–	92.9	96.6	125	200	125	375	375	150	–	–	–	–
		–	75	72.3	75.1	100	175	100	300	300	100	–	–	–	–
20DE125	6	125	–	117	121.6	150	250	150	375	375	250	–	–	–	–
		–	100	93	96.6	125	200	125	375	375	150	–	–	–	–
20DE144	6	150	–	135	140.5	175	300	175	400	400	250	–	–	–	–
		–	125	117	121.6	150	275	150	375	375	250	–	–	–	–

(1) Minimum protection device size is the lowest rated device that supplies maximum protection without nuisance tripping.
(2) Maximum protection device size is the highest rated device that supplies drive protection. For US NEC, minimum size is 125% of motor FLA. Ratings shown are maximum.
(3) Circuit Breaker - inverse time breaker. For US NEC, minimum size is 125% of motor FLA. Ratings shown are maximum.
(4) Maximum allowable rating by US NEC. Exact size must be chosen for each installation.
(5) Motor Circuit Protector - instantaneous trip circuit breaker. For US NEC minimum size is 125% of motor/drive FLA. Ratings shown are suggested. Instantaneous trip settings must be set to US NEC code. Not to exceed 1300% FLA.
(6) Bulletin 140M with adjustable current range should have the current trip set to the minimum range that the device will not trip.
(7) Manual Self-Protected (Type E) Combination Motor Controller, UL listed for 208 Wye or Delta, 240 Wye or Delta, 480Y/277 or 600Y/ 347. Not UL listed for use on 480V or 600V Delta/Delta, corner ground, or high-resistance ground systems.
(8) The AIC ratings of the Bulletin 140M Motor Protector Circuit Breakers may vary. See Bulletin 140M Motor Protection Circuit Breakers Application Ratings.
(9) When using a Manual Self-Protected (Type E) Combination Motor Controller, the drive must be installed in a ventilated or non-ventilated enclosure with the minimum volume specified in this column. Application specific thermal considerations may require a larger enclosure.

690 Volt AC Input Frames 5 & 6 Drive Protection Devices

Drive Cat. No.	Frame	kW Rating		Input Ratings		Dual Element Time Delay Fuse		Non-Time Delay Fuse		Circuit Breaker (3)	Motor Circuit Protector (5)
		ND	HD	Amps	kVA	Min (1)	Max (2)	Min (2)	Max (3)	Max (4)	Max (5)
20DF052	5	45	–	46.9	59.5	60	110	60	175	175	–
		–	37.5	40.1	48.0	50	90	50	150	150	–
20DF060	5	55	–	57.7	68.9	80	125	80	225	225	–
		–	45	46.9	59.5	60	110	60	175	175	–
20DF082	5	75	–	79.0	94.4	100	200	100	375	375	–
		–	55	57.7	68.9	80	125	80	225	225	–
20DF098	5	90	–	94.7	113	125	200	125	375	375	–
		–	75	79.0	94.4	100	200	100	375	375	–
20DF119	6	110	–	115	138	150	250	150	400	–	–
		–	90	92.9	113	125	200	125	375	–	–
20DF142	6	132	–	139	165.9	175	300	175	450	–	–
		–	110	115	137	150	250	150	400	–	–

(1) Minimum protection device size is the lowest rated device that supplies maximum protection without nuisance tripping.
(2) Maximum protection device size is the highest rated device that supplies drive protection. For US NEC, minimum size is 125% of motor FLA. Ratings shown are maximum.
(3) Circuit Breaker - inverse time breaker. For US NEC, minimum size is 125% of motor FLA. Ratings shown are maximum.
(4) Maximum allowable rating by US NEC. Exact size must be chosen for each installation.
(5) Motor Circuit Protector - instantaneous trip circuit breaker. For US NEC minimum size is 125% of motor/drive FLA. Ratings shown are suggested. Instantaneous trip settings must be set to US NEC code. Not to exceed 1300% FLA.

325 Volt DC Input Frames 1…6 Drive Protection Devices

Drive Cat. No.	Frame	HP Rating		DC Input Ratings	Fuse	Non-Time Delay (3)
		ND	HD	Amps		
20DB015	1	5	3	16	30	HSJ30
20DB022	1	7.5	5	23.3	45	HSJ45
20DB028	2	10	7.5	30	60	HSJ60
20DB042	3	15	10	45	90	HSJ90
20DB052	3	20	15	55	100	HSJ100
20DB070	4	25	20	75.3	150	HSJ150
20DB080	4	30	25	85.8	175	HSJ175
20DN104(1)	5	40	30	114.1	225	HSJ225
20DN130(1)	5	50	40	142.6	250	HSJ250
20DN154(1)	6	60	50	169	300	HSJ300
20DN192(1)	6	75	60	210.6	400	HSJ400
20DN260(1)(2)	6	100	75	272.1	400	HSJ400

(1) Catalog number corresponds to output amps for these drives. Drive must be programmed to lower voltage to obtain higher currents shown at right.
(2) Catalog number corresponds to drives with precharge only.
(3) The power source to Common Bus inverters must be derived from AC Voltages 600V or less, as defined in NFPA70; Art 430-18 (NEC). Battery supplies or MG sets are not included. The following devices were validated to break current of the derived power DC Bus: *Disconnects*: Allen-Bradley Bulletin No. 1494, 30 to 400 A; Bulletin No. 194, 30 to 400 A, or ABB: OESA, 600 & 800 A; OESL, all sizes. *s:* Ferraz Shawmut Type HSJ, all sizes. For any other devices, please contact the factory.

540 Volt DC Input Frames 1…6 Drive Protection Devices

Drive Cat. No.	Frame	kW Rating		DC Input Ratings	Fuse	Non-Time Delay (2)
		ND	HD	Amps		
20DC3P5	1	1.5	1.1	3.7	8	JKS-8
20DC5P0	1	2.2	1.5	5.3	10	JKS-10
20DC8P7	1	4	3.0	9.3	15	HSJ15
20DC011	1	5.5	4	12.6	20	HSJ20
20DC015	1	7.5	5.5	16.8	25	HSJ25
20DC022	1	11	7.5	24	40	HSJ40
20DC030	2	15	11	33.2	50	HSJ50
20DC037	2	18.5	15	40.9	70	HSJ70
20DC043	3	22	18.5	47.5	90	HSJ90
20DC056	3	30	22	61.9	100	HSJ100
20DC072	3	37	30	80.5	125	HSJ125
20DC085	4	45	37	95.1	150	HSJ150
20DH105 (1)	5	55	–	120.2	175	HSJ175
		–	45	95.1	175	HSJ175
20DH125 (1)	5	55	–	120.2	200	HSJ200
		–	45	95.1	200	HSJ200
20DH140	5	75	–	159	250	HSJ250
		–	55	120.2	250	HSJ250
20DH170 (1)	6	90	–	192	350	HSJ350
		–	75	159	350	HSJ350
20DH205 (1)	6	110	–	226	350	HSJ350
		–	90	192	350	HSJ350
20DH260 (1)	6	132	–	298	400	HSJ400
		–	110	226	400	HSJ400

(1) Also applies to "P" voltage class. s must be applied in the (+) leg and (-) leg of the DC Common Bus.
(2) The power source to Common Bus inverters must be derived from AC voltages 600V or less, as defined in NFPA70; Art 430-18 (NEC). Battery supplies or MG sets are not included. The following devices were validated to break current of the derived power DC Bus: *Disconnects*: Allen-Bradley Bulletin No. 1494, 30 to 400 A; Bulletin No. 194, 30 to 400 A, or ABB: OESA, 600 & 800 A; OESL, all sizes. *s*: Bussmann Type JKS, all sizes; Type 170M, Case Sizes 1, 2 and 3, or Ferraz Shawmut Type HSJ, all sizes. For any other devices, please contact the factory.

650 Volt DC Input Frames 1…6 Drive Protection Devices

Drive Cat. No.	Frame	HP Rating		DC Input Ratings	Fuse	Non-Time Delay (2)
		ND	HD	Amps		
20DD2P1	1	1	0.75	1.9	6	JKS-6
20DD3P4	1	2	1.5	3.0	6	JKS-6
20DD5P0	1	3	2	4.5	10	JKS-10
20DD8P0	1	5	3	8.1	15	HSJ15
20DD011	1	7.5	5	11.1	20	HSJ20
20DD014	1	10	7.5	14.6	30	HSJ30
20DD022	1	15	10	23.3	40	HSJ40
20DD027	2	20	15	28.9	50	HSJ50
20DD034	2	25	20	36.4	60	HSJ60

650 Volt DC Input Frames 1…6 Drive Protection Devices *(continued)*

Drive Cat. No.	Frame	HP Rating		DC Input Ratings	Fuse	Non-Time Delay (2)
		ND	HD	Amps		
20DD040	3	30	25	42.9	80	HSJ80
20DD052	3	40	30	55.7	90	HSJ90
20DD065	3	50	40	69.6	100	HSJ100
20DD077	4	60	50	84.5	150	HSJ150
20DJ096 (1)	5	75	–	105.3	175	HSJ175
		–	60	84.5	175	HSJ175
20DJ125 (1)	5	100	–	137.1	200	HSJ200
		–	75	105.3	200	HSJ200
20DJ156 (1)	6	125	–	171	300	HSJ300
		–	100	137.1	300	HSJ300
20DJ180 (1)	6	150	–	198	400	HSJ400
		–	125	171.2	400	HSJ400
20DJ248 (1)	6	200	–	272	400	HSJ400
		–	150	198	400	HSJ400

(1) Also applies to "R" voltage class. s must be applied in the (+) leg and (-) leg of the DC Common Bus.
(2) The power source to Common Bus inverters must be derived from AC Voltages 600V or less, as defined in NFPA70; Art 430-18 (NEC). Battery supplies or MG sets are not included. The following devices were validated to break current of the derived power DC Bus: *Disconnects*: Allen-Bradley Bulletin No. 1494, 30 to 400 A; Bulletin No. 194, 30 to 400 A, or ABB: OESA, 600 & 800 A; OESL, all sizes. *s*: Bussmann Type JKS, all sizes; Type 170M, Case Sizes 1, 2 and 3, or Ferraz Shawmut Type HSJ, all sizes. For any other devices, please contact the factory.

810 Volt DC Input Frames 1…6 Drive Protection Devices

Drive Cat. No.	Frame	HP Rating		DC Input Ratings	Fuse	Non-Time Delay (1)
		ND	HD	Amps		
20DE1P7	1	1	0.75	1.5	3	JKS-3
20DE2P7	1	2	1.5	2.4	6	JKS-6
20DE3P9	1	3	2	3.5	6	JKS-6
20DE6P1	1	5	3	6.2	10	JKS-10
20DE9P0	1	7.5	5	9.1	15	HSJ15
20DE011	1	10	7.5	11.5	20	HSJ20
20DE017	1	15	10	18	30	HSJ30
20DE022	2	20	15	23.6	40	HSJ40
20DE027	2	25	20	29	50	HSJ50
20DE032	3	30	25	34.3	60	HSJ60
20DE041	3	40	30	43.9	70	HSJ70
20DE052	3	50	40	55.7	90	HSJ90
20DE062	4	60	50	68.0	125	HSJ125
20DT099	5	100	–	108.6	150	HSJ150
		–	75	84.5	150	HSJ150
20DT144	6	150	–	158	200	HSJ200
		–	125	137.1	200	HSJ200

(1) The power source to Common Bus inverters must be derived from AC Voltages 600V or less, as defined in NFPA70; Art 430-18 (NEC). Battery supplies or MG sets are not included. The following devices were validated to break current of the derived power DC Bus: *Disconnects*: Allen-Bradley Bulletin No. 1494, 30 to 400 A; Bulletin No. 194, 30 to 400 A, or ABB: OESA, 600 & 800 A; OESL, all sizes. *s*: Bussmann Type JKS, all sizes; Type 170M, Case Sizes 1, 2 and 3, or Ferraz Shawmut Type HSJ, all sizes. For any other devices, please contact the factory.

932Volt DC Input Frames 5 & 6 Drive Protection Devices

Drive Cat. No.	Frame	kW Rating		DC Input Ratings	Fuse	Non-Time Delay (1)
		ND	HD	Amps		
20DW098	5	90	–	92.3	160	HSJ160
		–	75	92.3	160	HSJ160
20DW142	6	132	–	162.2	250	HSJ250
		–	110	134.9	250	HSJ250

(1) The power source to Common Bus inverters must be derived from AC Voltages 600V or less, as defined in NFPA70; Art 430-18 (NEC). Battery supplies or MG sets are not included. The following devices were validated to break current of the derived power DC Bus: *Disconnects*: Allen-Bradley Bulletin No. 1494, 30 to 400 A; Bulletin No. 194, 30 to 400 A, or ABB: OESA, 600 & 800 A; OESL, all sizes. *s*: Bussmann Type JKS, all sizes; Type 170M, Case Sizes 1, 2 and 3, or Ferraz Shawmut Type HSJ, all sizes. For any other devices, please contact the factory.

Step 5: Control and I/O Wiring

Important points to remember about control and I/O wiring:

- Always use copper wire.
- Wire with an insulation rating of 600V or greater is recommended.
- Control and signal wires should be separated from power wires by at least 0.3 meters (1 foot).
- For CE compliance, 115 volt digital input wiring must be shielded or must not exceed 30 meters (98 feet) in length.
- To maintain electrical safety for all user-accessible low voltage circuits (SELV and PELV circuits), I/O terminals designated for 24V or lower voltage must not be connected to a circuit of higher voltage or a circuit that is not adequately insulated from dangerous voltages with double or reinforced insulation within other connected equipment or wiring.
- To provide electrical safety for user-accessible low voltage I/O circuits that are referenced to earth (PELV circuits) and that may be touched simultaneously, care should be taken to provide a common earth reference for all equipment connected to the drive.

IMPORTANT I/O terminals labeled "(–)" or "Common" are not referenced to earth ground and are designed to greatly reduce common mode interference. Grounding these terminals can cause signal noise.

ATTENTION: Hazard of personal injury or equipment damage exists when using bipolar input sources. Noise and drift in sensitive input circuits can cause unpredictable changes in motor speed and direction. Use speed command parameters to help reduce input source sensitivity.

Control and I/O Wiring Recommendations

Type		Wire Type(s)	Description	Min Insulation Rating
Signal (1)(1)(2)	Standard Analog I/O	–	0.750 mm^2 (18 AWG), twisted pair, 100% shield with drain.	300V, 75…90 °C (167…194 °F)
	Remote Pot	–	0.750 mm^2 (18 AWG), 3 conductor, shielded.	
	Encoder/ Pulse I/O <30 m (100 ft)	Combined	0.196 mm^2 (24 AWG), individually shielded pairs.	
	Encoder/ Pulse I/O 30 to 152 m (100 to 500 ft)	Signal	0.196 mm^2 (24 AWG), individually shielded pairs.	
		Power	0.750 mm^2 (18 AWG) in.dividually shielded pairs	
		Combined	0.330 mm^2 (22 AWG), power is 0.500 mm^2 (20 AWG) individually shielded pairs.	
	Encoder/ Pulse I/O 152 to 259 m (500 to 850 ft)	Signal	0.196 mm^2 (24 AWG), individually shielded pairs.	
		Power	0.750 mm^2 (18 AWG) individually shielded pairs.	
		Combined	0.750 mm^2 (18 AWG) individually shielded pairs.	
Digital I/O **Safety Inputs** **Homing Inputs** (1)	Un-shielded	–	Per US NEC or applicable national or local code.	300V, 60 °C (140 °F)
	Shielded	Multi-conductor shielded cable	0.750 mm^2 (18 AWG), 3 conductor, shielded.	

(1) If the wires are short and contained within a cabinet that has no sensitive circuits, the use of shielded wire may not be necessary, but is always recommended.
(2) I/O terminals labeled "(–)" or "Common" are not referenced to earth ground and are designed to greatly reduce common mode interference. Grounding these terminals can cause signal noise.

Main Control Board DIP Switch Settings

ATTENTION: The DIP switches for Digital Inputs 4…6 are set to 24V DC at the factory. If you are running a 115V AC input application, the switches must be set as indicated below before applying power to the drive or damage to the main control board may occur.

Switch and Jumper Settings

Function	Default	Switch	Open	Closed	Notes
HW Enable Jumper (P22)	pins 2-4 HW Enbl	SHUNT Jumper	pins 2-4 HW Enbl	pins 1-3 No Enbl	No Jmpr = HW Enbl See Hardware Enable Circuitry on page 48 for configuration.
Gate Enable Jumper (P13)	Jumper on pins 15-16	SHUNT Jumper	No Jmpr	Jumper on pins 15-16	No Jmpr = Gate disable or Safe-Off/ Second Encoder board is present(1)
Analog Input 1	Voltage	S5-2	Voltage	Current	Change with Power Off
Analog Input 2	Voltage	S5-1	Voltage	Current	Change with Power Off
Digital Inputs 4-6 Voltage	24V DC	S4-1, S4-2	115V AC	24V DC	Change with Power Off
Digital Input 1 Voltage	24V DC	S3-1	24V DC	12V DC	Change with Power Off
Digital Input 2 Voltage	24V DC	S3-2	24V DC	12V DC	Change with Power Off
Encoder Supply Voltage	12V DC	S2-4	12V DC	5V DC	Change with Power Off Typically, set all switches the same
Encoder Signal A Voltage	12V DC	S2-1	12V DC	5V DC	
Encoder Signal B Voltage	12V DC	S2-2	12V DC	5V DC	
Encoder Signal Z Voltage	12V DC	S2-3	12V DC	5V DC	

Function	Down	Switch	Up	Center	Notes
DriveLogix Processor	RUN	S1	Prog	Remote	Processor Mode

(1) Refer to publication 20D-UM007, DriveGuard Safe-Off Option for PowerFlex 700S Phase II AC Drives and PowerFlex 700L Liquid-Cooled AC Drives, for more information on the Safe-Off Option board, or publication, 20D-IN009 Installation Instructions - Second Encoder Option Card for PowerFlex 700S Drives with Phase II Control, for more information on the Second Encoder Option board.

Please note there are two separate values for an encoder.

Main Control Board Dip Switches

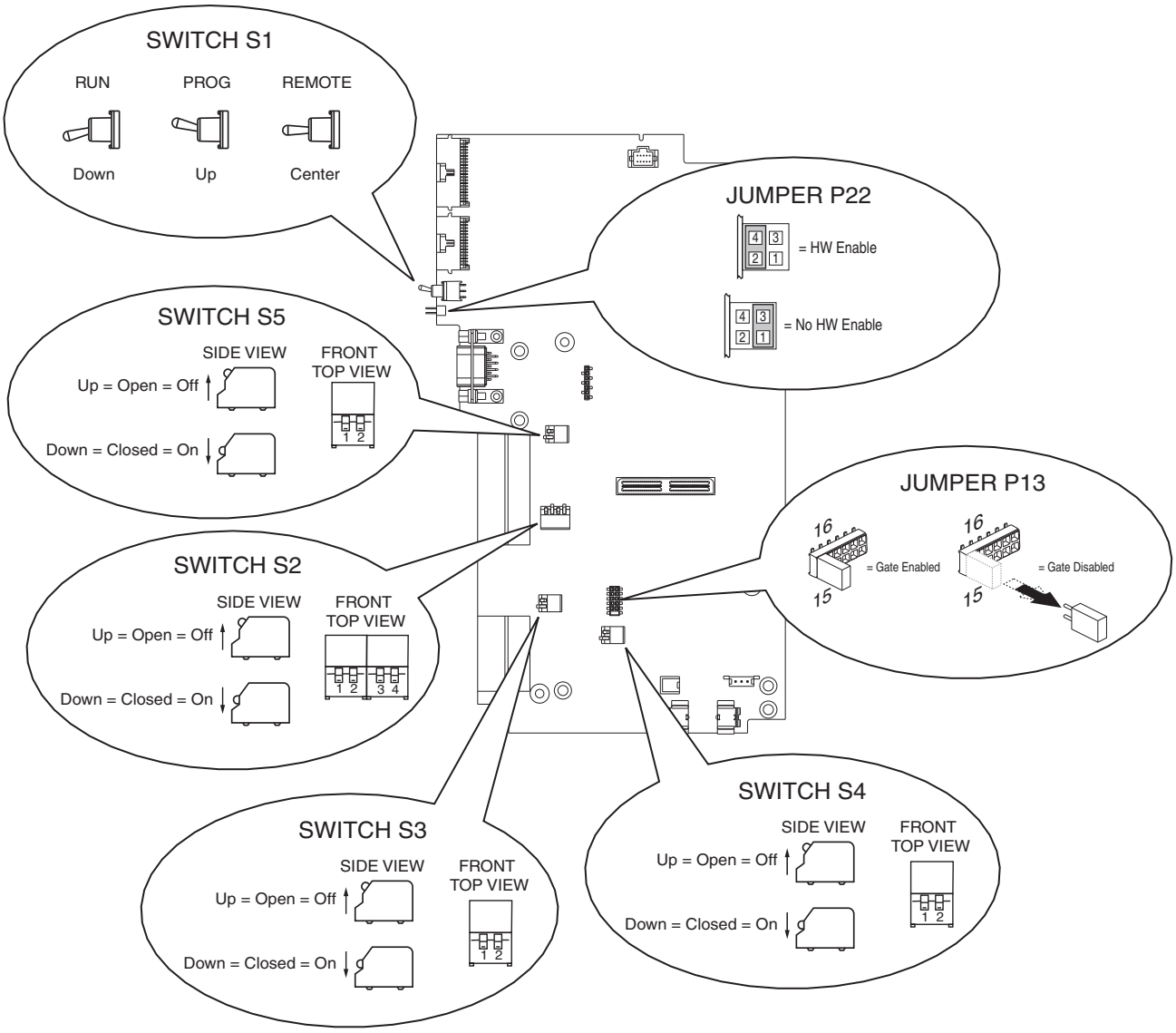

Hardware Enable Circuitry

By default, digital input 6 is configured for hardware enable input. This is for applications requiring the drive to be disabled *without* software interpretation. With the "HW Enable Jumper (Shunt)" on the pins closest to the circuit board (2-4), digital input 6 is configured as a "dedicated" hardware enable. If this configuration is not required, the "HW Enable Jumper (Shunt)" may be moved to the out board pins (1-3), making digital input 6 user programmable via parameter 830 [Dig In6 Sel]. See Main Control Board Dip Switches on page 48.

I/O Terminals

Terminal blocks TB1 and TB2 contain connection points for all inputs, outputs and standard encoder connections. When installed, both terminal blocks reside on the main control board. These components are provided with the drive but are not factory installed.

Make the terminal block wire connections.

IMPORTANT For NEMA/UL Type 1 applications, all wiring must be routed through the conduit plate on the drive. Route any wires from the expanded cassette to the base cassette and out of the drive.

When wiring is complete, install the connector plug.

Control & Encoder Terminal Block Specifications

Name	Description	Wires Size Range(1)		Torque	
		Maximum	Minimum	Maximum	Recommended
I/O Terminal Blocks	Signal & Encoder power connections	1.5 mm^2 (16 AWG)	0.14 mm^2 (28 AWG)	0.25 N•m (2.2 lb•in)	0.22 N•m (1.9 lb•in)

(1) Maximum/minimum sizes the terminal block accepts - these are not recommendations.

Main Control Board I/O Terminal Locations

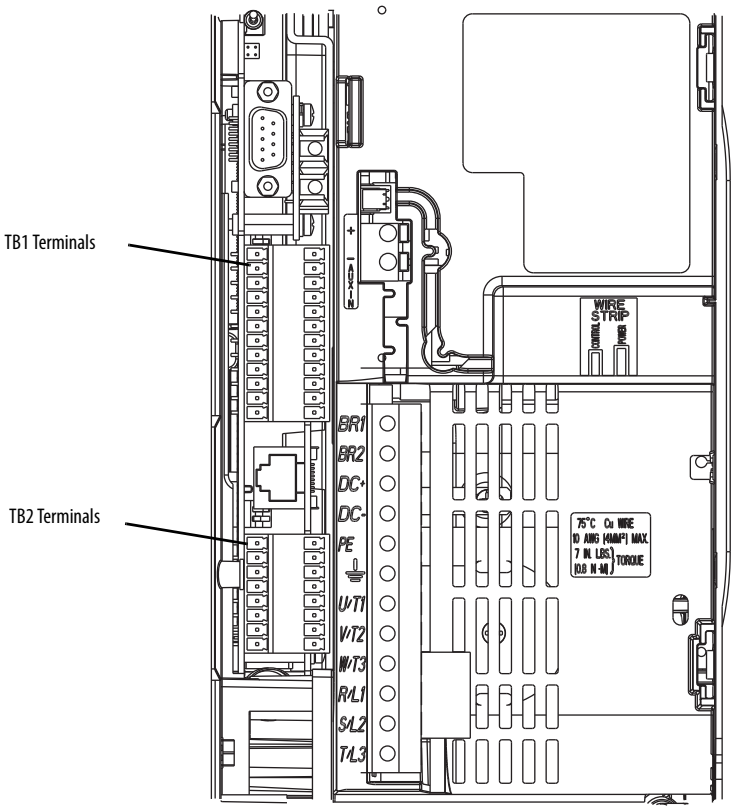

TB1 Terminals

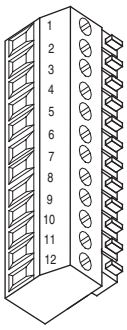

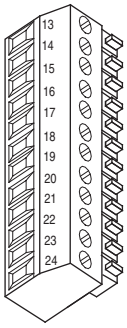

Terminal	Signal	Factory Default	Description	Related Parameter(s)
1	Analog Input 1 Comm.	(Volt)	Bipolar, differential input, ±10V, 0…20 mA, 13 bit + sign 20 kΩ impedance at Volt; 500 Ω impedance at mA[1]	
2	Analog Input 1 (+/-)			800
3	Shield	NA	Analog Input Shield	
4	Analog Input 2 Comm.	(Volt)	Bipolar, differential input, ±10V, 0…20 mA, 13 bit + sign 20 kΩ impedance at Volt; 500 Ω impedance at mA	
5	Analog Input 2 (+/-)			806
6	Analog Input 3 [NTC-] Comm.	(Volt)	Differential input, 0…10V, 10 bit (for motor control mode FOC2, this is the temperature adaptation input).	
7	Analog Input 3 [NTC+]			812
8	Shield	NA	Analog Output Shield	
9	Analog Output 1 (-)	(Volt)	Bipolar, differential output, ±10V, 0…20 mA, 11 bit + sign 2 kΩ minimum load	832, 833
10	Analog Output 1 (+)			
11	Analog Output 2 (-)	(Volt)		839, 840
12	Analog Output 2 (+)			
13	+10V Reference	NA	Rating: 20 mA maximum load (Recommend 5 Ω pot)	
14	Reference Common	NA		
15	-10V Reference	NA		
16	Encoder A	NA	Normal current draw per channel: 20 mA	230-233
17	Encoder A (Not)	NA		
18	Encoder B	NA		
19	Encoder B (Not)	NA		
20	Encoder Z	NA		
21	Encoder Z (Not)	NA		
22	Encoder Reference (+)	NA	12 or 5V DC power supply for primary encoder interface Rating: 300 mA maximum	
23	Encoder Reference (-)	NA		
24	Encoder Shield	NA	Connection point for encoder shield	

(1) The analog inputs are not isolated. However, the analog inputs can be connected in series when using current mode. Note that at 20 mA the voltage source must be capable of providing 10V DC at the drive terminals for one drive - - 20V DC is required for two drives and 30V DC is required for three drives.

TB2 Terminals

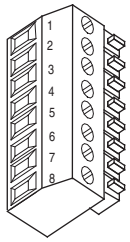

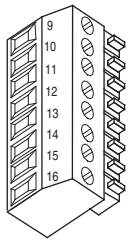

Terminal	Signal	Factory Default	Description	Related Parameter (s)
1	24V DC Common (-)	NA	Drive supplied 24V DC logic input power Rating: 300 mA maximum load	
2	24V DC Source (+)	NA		
3	Digital Output 1		24V DC Open Collector (sinking logic) Rating: Internal Source = 150 mA max External Source = 750 mA	816, 847
4	Digital Output 1/2 Com	NA	Common for Digital Output 1 & 2	
5	Digital Output 2		24V DC Open Collector (sinking logic) Rating: Internal Source = 150 mA max External Source = 750 mA	851, 852
6	Relay Output 3 (NC)		Relay contact output Rating: 115V AC or 24V DC = 2 A max Inductive/Resistive	856, 857
7	Relay Output 3 Com	NA		
8	Relay Output 3 (NO)			
9	Digital Input 1-3 Com	NA	Common for Digital Inputs 1-3	
10	Digital Input 1		High speed 12V or 24V DC(1), sinking Load:15 mA at 24V DC	825
11	Digital Input 2			826
12	Digital Input 3		Load:15 mA at 24V DC sourcing	827
13	Digital Input 4-6 Com	NA	Common for Digital Inputs 4-6	
14	Digital Input 4		Load: 10 mA at 24V DC sinking/sourcing Load: 7.5 mA at 115V AC **Note**: The 115 VAC Digital Inputs can withstand 2 mA of leakage current without turning on. If an output device has a leakage current greater than 2 mA a burden resistor is required. A 68.1 Ω resistor with a 0.5 watt rating should be used to keep the 115 VAC output below 2 mA.	828
15	Digital Input 5			829
16	Digital Input 6	HW Enable		830

(1) Digital Inputs 1 and 2 are configured for 12V or 24V DC via DIP switches S3-1 and S3-2, respectively. 24V DC is the default setting.

I/O Wiring Examples

TB1 Analog Input/Output and Encoder Wiring Examples

Input/Output	Connection Example	Required Parameter Changes
Potentiometer Unipolar Speed Reference 0…10V Analog Input Internal Source	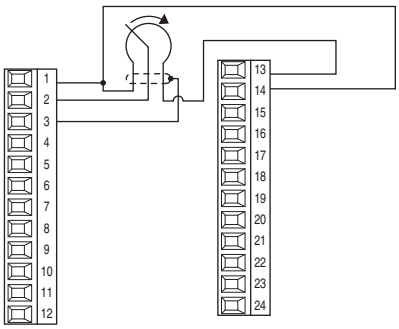	NA
Potentiometer Bi-polar Speed Reference ±10V Analog Input Internal Source	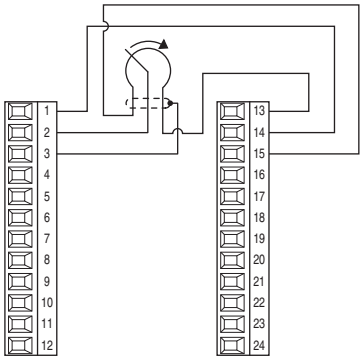	NA
Unipolar Speed Reference 0…10V Analog Input External Source	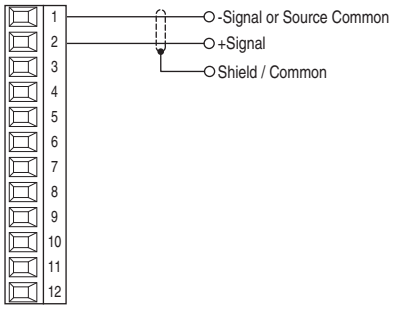	NA

Input/Output	Connection Example	Required Parameter Changes
Analog Speed and Current Meters ±10V DC Analog Outputs	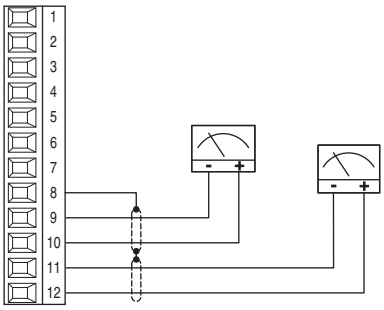	Using Analog Output 1: ±10V to meter Motor RPM and direction: • Send the data to the Analog Output parameter: Par 833 [Anlg Out1 Real] (the destination) linked to Par 71 [Filtered SpdFdbk] (the source) • Scale the output to the source parameter: Par 835 [Anlg Out1 Scale] = 175 (Par 4 [Motor NP RPM] = 1750 / 10V) Using Analog Out 2: ±10V to meter Motor Current: • Send the data to the Analog Output parameter: Par 840 [Anlg Out2 Real] (the destination) linked to Par 308 [Output Current] (the source) • Scale the output to the source parameter: Par 822 [Anlg Out2 Scale] = xx (Par 2 [Motor NP FLA] / 10V output)
Primary Encoder Interface Supports 5V DC or 12V DC differential encoders with internal power supply. Used as primary closed loop feedback.	Internal Supply 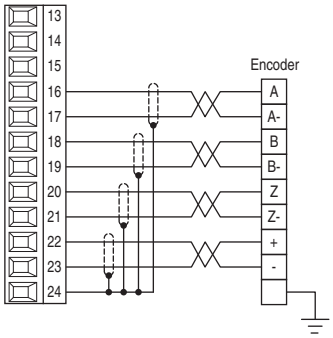 External Supply 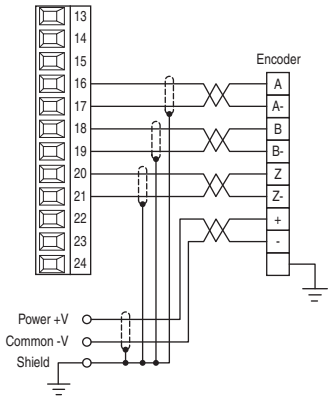	Using Encoder 0 as speed feedback: Par 222 [Mtr Fdbk Sel Pri] = 0 “Encoder 0” (default) Par 232 [Encoder0 PPR] = Pulses/Rev for installed encoder

TB2 Digital Input/Output Wiring Examples

Input/Output	Connection Example	
	Sourcing Digital Inputs - Internal Power Supply 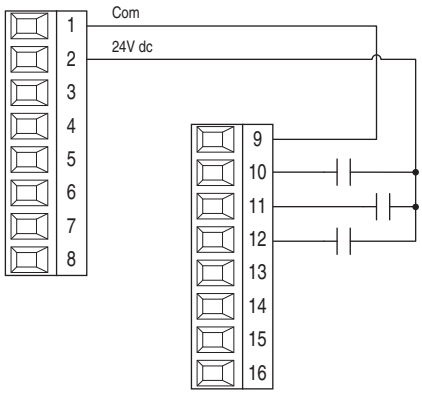 	**Sourcing and Sinking Definitions**
Digital Inputs used for enable and precharge control. **Note**: 24V DC supply - supports only on-board digital inputs. Do not use for circuits outside the drive. **Note**: The factory default for all digital inputs is 24V DC. To use 115V AC on digital inputs 4…6 see Switch and Jumper Settings on page 47. **Note**: Digital inputs 1…3 are always 12V DC or 24V DC.	Sourcing Digital Outputs - Internal Power Supply 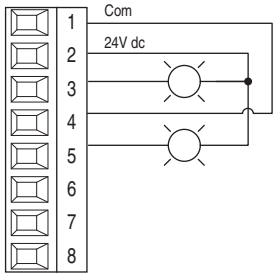 	The digital inputs and digital outputs of the PowerFlex 700S AC drive support Sourcing or Sinking configuration. Typically, digital inputs are sourcing devices and digital outputs are sinking devices. The following definitions apply throughout this section: • **Sourcing a Digital Input** - The digital input common (return) is connected to the power supply common. Applying a positive voltage to the digital input causes it to activate (pull up). • **Sinking a Digital Input** - The digital input common (return) is connected to the power supply positive voltage. Applying 0V or common to the digital input causes it to activate (pull down). • **Sourcing a Digital Output** - The digital output common (return) is connected to the power supply common. The device to be controlled by the digital output is connect to the positive voltage and the device common is connected to the digital output. • **Sinking a Digital Output** - The digital output common (return) is connected to the power supply positive voltage. The digital output is connect to the device to be controlled and the device common is connected to the power supply common. **Note**: Digital inputs 1…3 can only be configured as sourcing inputs. Digital inputs 4…6 can be configured as sourcing or sinking inputs.
	Sinking Digital Inputs - Internal Power Supply 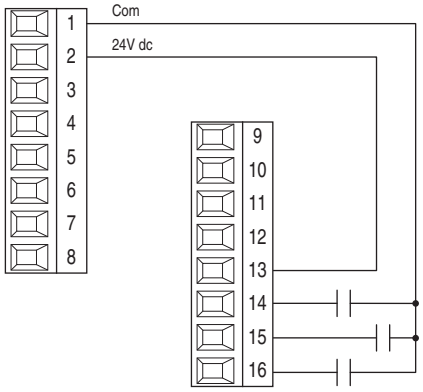 	
	Sinking Digital Output - Internal Power Supply 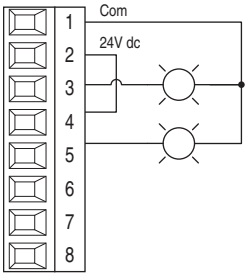 	

Input/Output	Connection Example	
Digital Outputs used with 24V DC Relays - External Power Supply Note: Digital Inputs 1-3 are always 12V or 24V DC.	Sourcing Digital Outputs 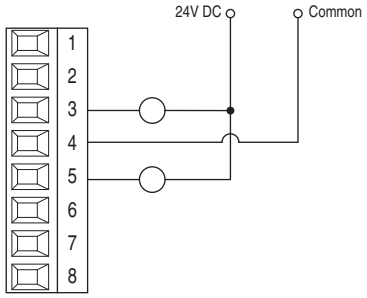 	• **Sourcing a Digital Output** - The digital output common (return) is connected to the power supply common. The device to be controlled by the digital output is connect to the positive voltage and the device common is connected to the digital output. • **Sinking a Digital Output** - The digital output common (return) is connected to the power supply positive voltage. The digital output is connect to the device to be controlled and the device common is connected to the power supply common.
	Sinking Digital Outputs 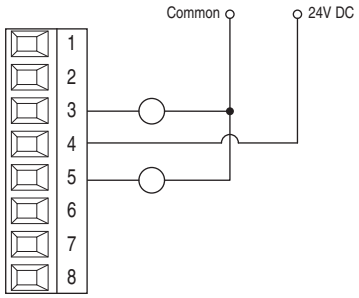 	
Digital Inputs 24V DC	Sourcing Digital Inputs - Internal Power Supply, 2-Wire Control 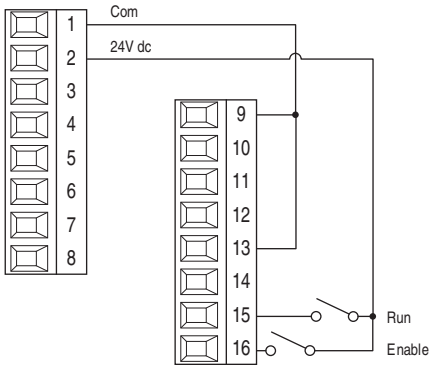 	Required Parameter Changes: • Set Par 829 [Dig In5 Sel] to value 7 - "Run". • Par 153 [Control Options], bit 8 "3WireControl" is automatically set to "Off" (0) for 2-wire control. • Set Par 168 [Normal Stop Mode] for the desired stopping mode: 0 = Ramp Stop 1 = CurLim Stop 2 = Coast Stop
Digital Inputs 24V DC	Sourcing Digital Inputs- Internal Power Supply, 3-Wire 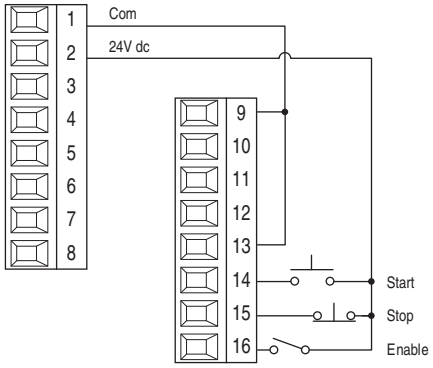 	• Set Par 829 [Dig In5 Sel] to value 14 - "Normal Stop". • Set Par 828 [Dig In4 Sel] to value 5 - "Start". • Par 153 [Control Options], bit 8 "3WireControl" is automatically set to "On" (1) for 3-wire control. • Set Par 168 [Normal Stop Mode] for the desired stopping mode: 0 = Ramp Stop 1 = CurLim Stop 2 = Coast Stop

DriveLogix 5730 Controller Option

Refer to the DriveLogix 5730 Controller for PowerFlex 700S Drives with Phase II Control User Manual, publication 20D-UM003, for details on using and configuring this option.

IMPORTANT The DriveLogix controller option ships with the battery installed, but disconnected. You must connect the battery while installing the drive.

DriveLogix5730 Controller Specifications

ATTENTION: This product contains a 3V Lithium battery if the DriveLogix Controller option board is installed. Perchlorate Material - special handling may apply. See www.dtsc.ca.gov/hazardouswaste/perchlorate.

Category	Specification
Serial port	RS-232, fully isolated DF1, DH-485, ASCII 38.4 kilobit/s maximum
Optional embedded EtherNet/IP	RJ-45 or 100BaseT 10/100 MB/s
Connectivity options (these options require the Logix Expansion Board and Expanded Cassette)	• NetLinx communication daughtercards (ControlNet, EtherNet/IP, DeviceNet, Third Party) • Compact I/O connection • CompactFlash (memory card)
User memory	1.5 MB
Non-volatile memory	1784-CF64 CompactFlash
Maximum number of I/O banks	2
Maximum number of I/O modules	16 (8 modules per bank or 4 max on either side of the power supply)
Battery	1769-BA
Serial cable	1756-CP3 directly to controller 1747-CP3 directly to controller
Compact I/O Cable	20D-DL2-CR3 20D-DL2-CL3

DriveGuard Safe Torque Off with Second Encoder Option

Refer to the DriveGuard Safe Torque Off Option for PowerFlex 700S Phase II AC Drives and PowerFlex 700L Liquid-Cooled AC Drives User Manual, publication 20D-UM007, for details on installing and configuring this option board.

Refer to Appendix J "Instructions for ATEX Approved PowerFlex 700S Phase II Drives in Group II Category (2) Applications with ATEX Approved Motors", in the PowerFlex 700S Drive with Phase II Control Programming Manual, publication 20D-PM001, for details on ATEX approved applications.

Second Encoder Feedback Option

Second Encoder Feedback Option Specifications

Consideration	Description
Input	Dual Channel Plus Marker, Isolated with differential transmitter Output (Line Drive) Incremental, Dual Channel Quadrature type
Encoder Voltage Supply	5V DC or 12V DC 320 mA per channel 5V DC requires an external power supply. 12 V DC minimum high state voltage of 7V DC, maximum low state voltage of 0.4V DC
Maximum Input Frequency	400 kHz

Recommended Cables for the Second Encoder Feedback Option Card

Cable Type and Length		Wire Type(s)	Description
Encoder/Pulse I/O Less 30.5 m (100 ft)	Combined:	Belden 9730 (or equivalent) (1)	0.196 mm^2 (24 AWG), individually shielded.
Encoder/Pulse I/O 30.5 m (100 ft) to 152.4 m (500 ft)	Signal:	Belden 9730/9728 (or equivalent) (1)	0.196 mm^2 (24 AWG), individually shielded.
	Power:	Belden 8790 (2)	0.750 mm^2 (18 AWG)
	Combined:	Belden 9892 (3)	0.330 mm^2 or 0.500 mm^2 (3)
Encoder/Pulse I/O 152.4 m (500 ft) to 259.1 m (850 ft)	Signal:	Belden 9730/9728 (or equivalent) (1)	0.196 mm^2 (24 AWG), individually shielded.
	Power:	Belden 8790 (2)	0.750 mm^2 (18 AWG)
	Combined:	Belden 9773/9774 (or equivalent) (4)	0.750 mm^2 (18 AWG), individually shielded pair.

(1) Belden 9730 is 3 individually shielded pairs (2 channel plus power). If 3 channel is required, use Belden 9728 (or equivalent).
(2) Belden 8790 is 1 shielded pair.
(3) Belden 9892 is 3 individually shielded pairs (3 channel), 0.33 mm^2 (22 AWG) plus 1 shielded pair 0.5 mm^2 (20 AWG) for power.
(4) Belden 9773 is 3 individually shielded pairs (2 channel plus power). If 3 channel is required, use Belden 9774 (or equivalent).

Second Encoder Feedback Option Terminal Designations

	Term. No.	Signal	Description
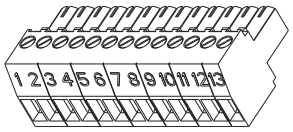	1…4	–	Not connected. Refer to DriveGuard Safe Torque Off with Second Encoder Option on page 56.
	5	A	Quadrature A input
	6	Not A	
	7	B	Quadrature B input
	8	Not B	
	9	Z	Marker Pulse
	10	Not Z	
	11	Power	DC Power for encoder interface
	12	Common	
	13	Shield	Connection point for encoder cable shield

Second Encoder Feedback Option Wiring Examples

Differential Encoder with Internal Supply

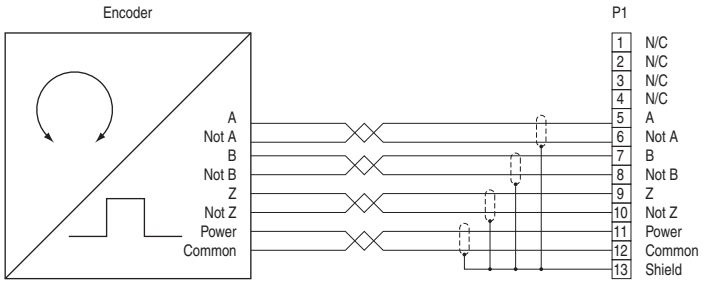

Differential Encoder with External Supply

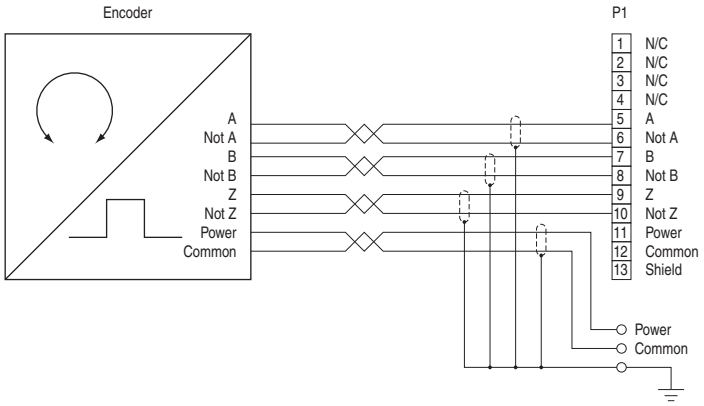

Second Encoder Feedback Option DIP Switch Settings

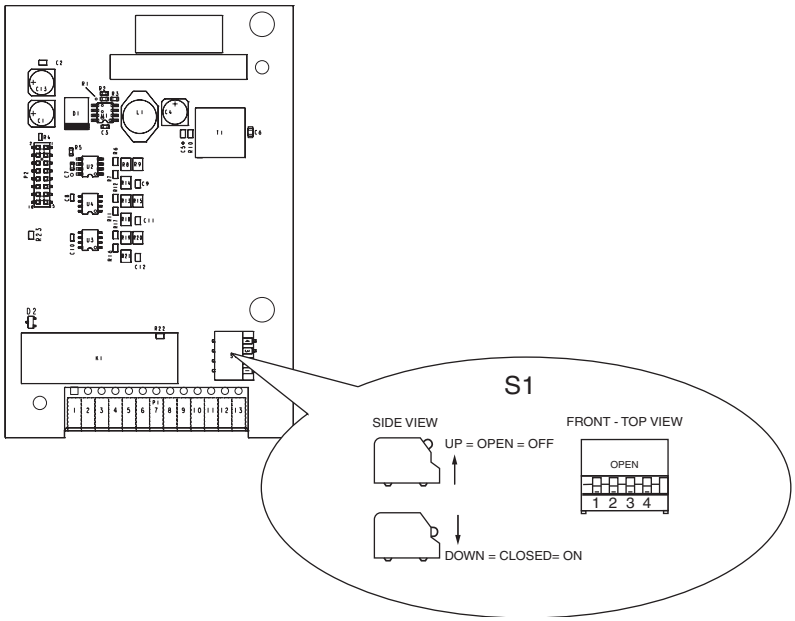

Voltage Selection	S1-1 (Supply)	S1-2 (A Channel)	S1-3 (B Channel)	S1-4 (Z Channel)
5V DC	Closed	Closed	Closed	Closed
12V DC	Open	Open	Open	Open

Stegmann Hi-Resolution Encoder Feedback Option

Stegmann Hi-Resolution Encoder Feedback Option Specifications

Consideration	Description
Encoder Voltage Supply	11.5V DC @ 130 mA
Hi-Resolution Feedback	Sine/Cosine 1V P-P Offset 2.5
Maximum Cable Length	90 m (295 ft)
Maximum Frequency (Encoder Speed)	12.5 µs/cycle (4687.5 rpm for encoders with 1024 sine cycles per revolution) (9375 rpm for encoders with 512 sine cycles per revolution)
RS-485 Interface	The Hi-Resolution Feedback Option card obtains the following information via the Hiperface RS-485 interface shortly after powerup: • Address • Command Number • Mode • Number of turns • Number of Sine/Cos cycles • Checksum

Encoders Supported by the Stegmann Hi-Resolution Encoder Feedback Option Card

IMPORTANT Please note that encoders must be ordered as “Single Ended” so that the RS-485 channel has the proper termination network installed at the factory.

Hi-Resolution Encoder Model(1)	Resolution	Comment
Stegmann SINCOS SCS-60, SCS-70, SCM-60, and SCM-70	512 sine cycles per revolution.	SCM-60 and SCM-70 have built-in mechanical turns counter.
Stegmann SINCOS SCS-KIT-101 and SCM-KIT-101	1024 sine cycles per revolution.	SCM-60 and SCM-70 have built-in mechanical turns counter.
Stegmann SINCOS SRS-50, SRS-60, SRM-50, and SRM-60	1024 sine cycles per revolution.	SRM-50 and SRM-60 have built-in mechanical turns counter.
Stegmann SINCOS SRS/SRM 25	1024 sine cycles per revolution	SRS25 and SRM25 have built-in mechanical turns counter. IP65 Protection Class. Size 25 square flange mounting.
Stegmann SINCOS SRS660	1024 sine cycles per revolution	Hollow-shaft up to 14 mm diameter
Stegmann SINCOS SHS-170	512 sine cycles per revolution.	While the software supports this encoder, the SHS-170 draws excessive current and should only be used with an external power supply.
Allen-Bradley 842HR	1024 sine cycles per revolution	Has built-in mechanical turns counter. IP65 Protection Class. Size 25 square flange mounting.

(1) Hiperface® SINCOS®, SINCODER® and LINCODER® are registered trademarks of Stegmann Inc.

Wiring the Stegmann Hi-Resolution Feedback Option Card to an Encoder

Terminal block P1 contains connection points for a Stegmann Hiperface® encoder. This terminal block resides on the Hi-Resolution Encoder Feedback Option card.

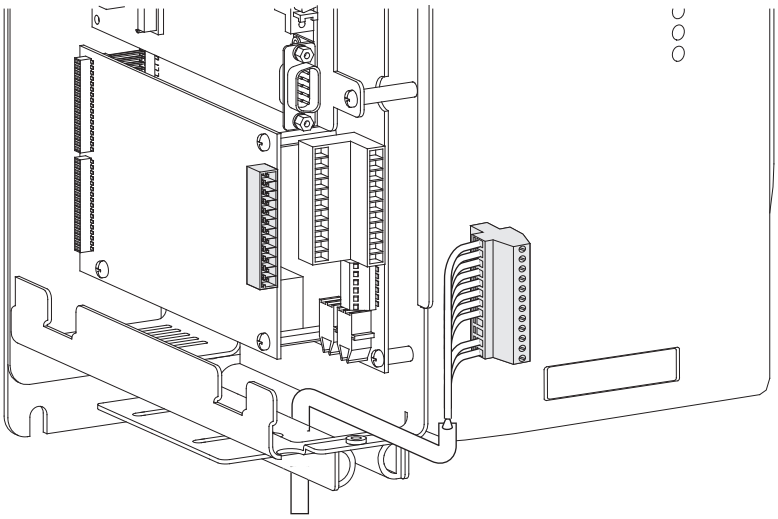

TIP Remember to route wires through the sliding access panel at the bottom of the control assembly.

Stegmann Hi-Resolution Encoder Option Terminal Designations

	Terminal	Signal	Description
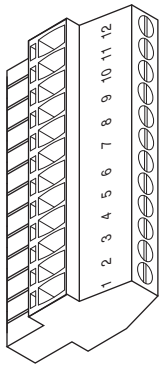	12	POWER COMMON	Power supply for encoder interface.
	11	POWER	
	10	REFSIN	Negative Sine signal.
	9	+SIN	Positive Sine signal.
	8	REFCOS	Negative Cosine signal.
	7	+COS	Positive Cosine signal.
	6	SHIELD	Connection point for encoder cable shield.
	5	SHIELD	
	4	N/C	Not connected.
	3	N/C	
	2	DATA+ (RS 485)	Positive DH485 terminal.
	1	DATA- (RS 485)	Negative DH485 terminal.

Recommended Cables and Wiring Diagrams for the Stegmann Hi-Resolution Feedback Option Card

If you are using this motor and feedback device:	Use this cable:	See this wiring diagram:
Allen-Bradley MPL-A/B3xx, -A/B4xx, -A/B45xx, -A/B5xx, and -A/B6xx motors with embedded Stegmann rotary encoder	Allen-Bradley 2090-CFBM7E7-CDAFXX	All MPL-A/B3xx, -A/B4xx, -A/B45xx, -A/B5xx, and -B6xx motors with 2090-CFBM7E7-CDAFXX or 2090-CFBM7DF-CDAFXX cable on page 62
Allen-Bradley MPL-A/B3xx, -A/B4xx, -A/B45xx, -A/B5xx, and -A/B6xx motors with embedded Stegmann rotary encoder	Allen-Bradley 2090-CFMB7DF-CDAFXX	All MPL-A/B3xx, -A/B4xx, -A/B45xx, -A/B5xx, and -B6xx motors with 2090-CFBM7E7-CDAFXX or 2090-CFBM7DF-CDAFXX cable on page 62
HPK-Series motors with embedded Stegmann rotary encoder	Allen-Bradley 2090-XXNFMF-SXX	HPK-Series motors with 2090-XXNFMF-SXX cable on page 62
Allen-Bradley 1326AB-BXXXX-21ML and -21MKXL motors with embedded Stegmann rotary encoder	Allen-Bradley 1326-CECU-XXL-XXX	1326AB-BXXXX-21ML, and -21MKXL motors with a 1326-CECU-XXL-XXX cable on page 62
Allen-Bradley 1326AB-BXXXX-M2L, -M2KXL, -S2L and -S2KXL motors with embedded Stegmann rotary encoder	Allen-Bradley 2090-CDNFDMP-SXX	MPL-A5xx and all MPL-Bxxx motors or 1326AB-BXXXX-M2L, -M2KXL, -S2L, and -S2KXL motors with 2090-CDNFDMP-SXX cable on page 63
Allen-Bradley MPL-A5xx and all MPL-Bxxx motors with embedded Stegmann rotary encoder	Allen-Bradley 2090-CDNFDMP-SXX	MPL-A5xx and all MPL-Bxxx motors or 1326AB-BXXXX-M2L, -M2KXL, -S2L, and -S2KXL motors with 2090-CDNFDMP-SXX cable on page 63
Allen-Bradley 1326AB-BXXXX-M2L, -M2KXL, -S2L and -S2KXL motors with embedded Stegmann rotary encoder	Allen-Bradley 2090-XXNFMP-SXX	MPL-A5xx and all MPL-Bxxx Motor or 1326AB-BXXXX-M2L, -M2KXL, -S2L, and -S2KXL motor with 2090-XXNFMP-SXX cable on page 63
Allen-Bradley MPL-A5xx and all MPL-Bxxx motors with embedded Stegmann rotary encoder	Allen-Bradley 2090-XXNFMP-SXX	MPL-A5xx and all MPL-Bxxx Motor or 1326AB-BXXXX-M2L, -M2KXL, -S2L, and -S2KXL motor with 2090-XXNFMP-SXX cable on page 63
Allen-Bradley MPL-A3xx - MPL-A45xx and all MPG series motors with embedded Stegmann rotary encoder	Allen-Bradley 2090-XXNFMP-SXX	MPL-A3xx - MPL-A45xx and all MPG series motors with 2090-XXNFMP-SXX cable on page 63
Allen-Bradley MPL-A3xx - MPL-A45xx and all MPG series motors with embedded Stegmann rotary encoder	Allen-Bradley 2090-UXNFDMP-SXX	MPL-A3xx - MPL-A45xx and all MPG series motors with 2090-UXNFDMP-SXX cable on page 64
Any other motor with external Stegmann SHS-170 rotary encoder	Stegmann shielded twisted-pair cable with 12-pin DIN style connector	Stegmann shielded twisted-pair cable with 12-pin DIN style connector on page 64
Any other motor with external Stegmann SCS-60, SCS-70, SCM-60 or SCM-70, SRS-50, SRS-60, SRM-60, SRM-60, SRS-25, SRM-25, or Allen-Bradley 842HR rotary encoder	Stegmann shielded twisted-pair cable with 10-pin MS style connector	Stegmann shielded twisted-pair cable with 10-pin MS style connector on page 65
Any other motor with external Stegmann SCS-Kit 101 or SCK-Kit 101 rotary encoder	Stegmann shielded twisted-pair cable with 8-pin Berg style connector	Stegmann shielded twisted-pair cable with 8-pin Berg style connector on page 65
Any other motor with external Stegmann SRS660 rotary encoder	Is available only with pre-attached Stegmann shielded twisted-pair cable of various lengths	Pre-attached Stegmann shielded twisted-pair cable on page 65

Stegmann Hi-Resolution Feedback Option Card Connection Examples

All MPL-A/B3xx, -A/B4xx, -A/B45xx, -A/B5xx, and -B6xx motors with 2090-CFBM7E7-CDAFXX or 2090-CFBM7DF-CDAFXX cable

Note: Thermal switch cannot be accessed by using 2090-CFBM7X7-CDAFXX cable.

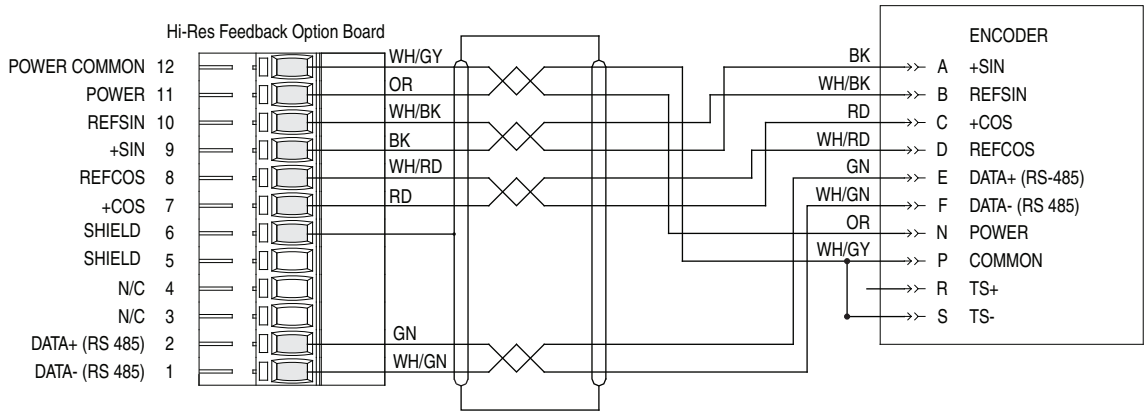

HPK-Series motors with 2090-XXNFMF-SXX cable

Note: Thermal switch cannot be accessed by using 2090-XXNFMF-SXX cable.

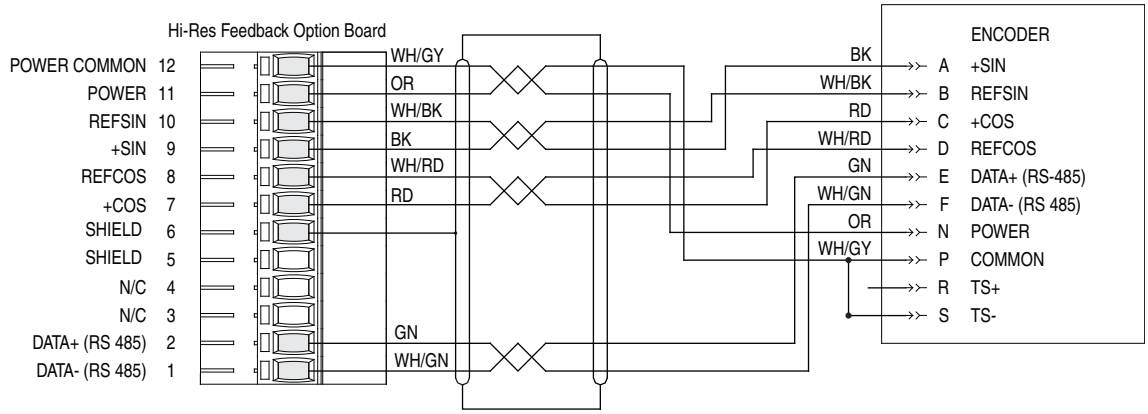

1326AB-BXXXX-21ML, and -21MKXL motors with a 1326-CECU-XXL-XXX cable

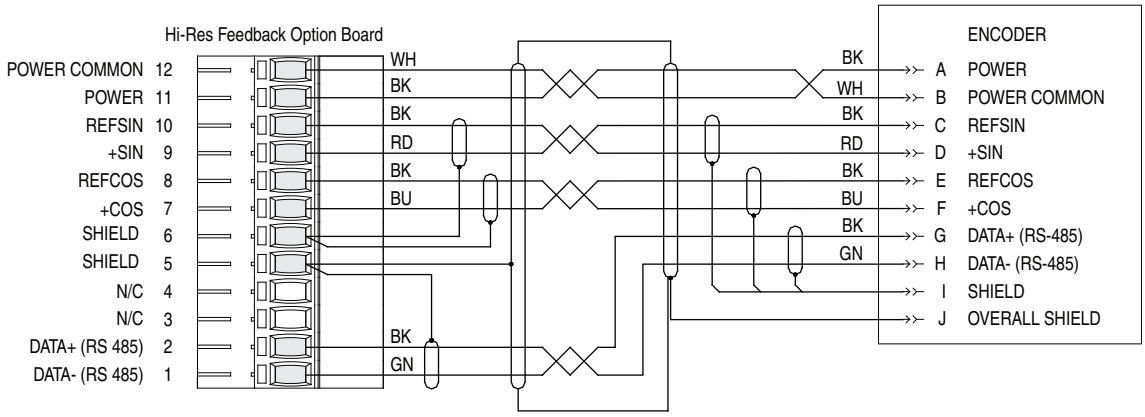

Stegmann Hi-Resolution Feedback Option Card Connection Examples

MPL-A5xx and all MPL-Bxxx motors or 1326AB-BXXXX-M2L, -M2KXL, -S2L, and -S2KXL motors with 2090-CDNFDMP-SXX cable

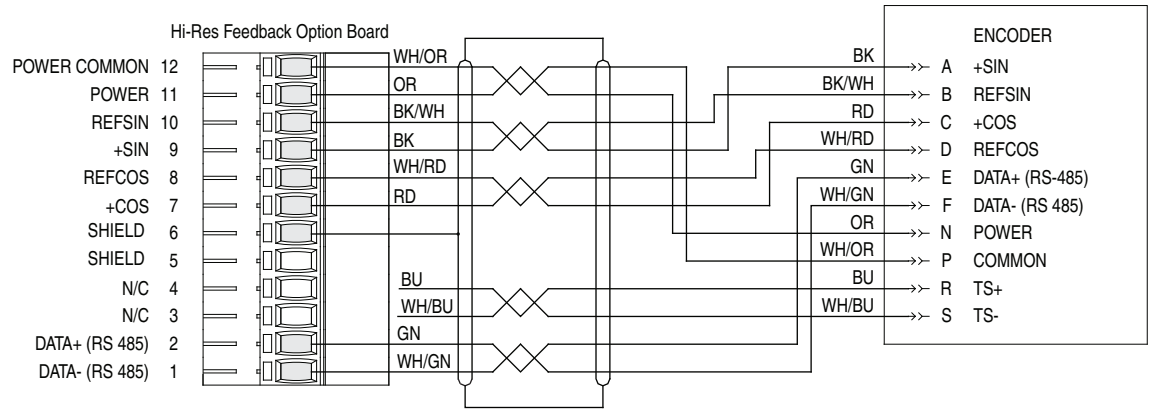

MPL-A5xx and all MPL-Bxxx Motor or 1326AB-BXXXX-M2L, -M2KXL, -S2L, and -S2KXL motor with 2090-XXNFMP-SXX cable

Note: Thermal switch cannot be accessed by using 2090-XXNFMP-SXX cable.

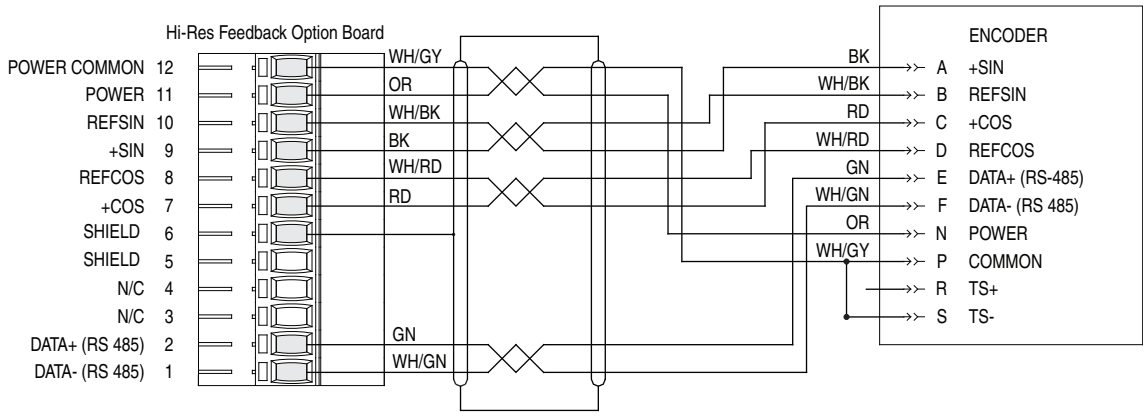

MPL-A3xx - MPL-A45xx and all MPG series motors with 2090-XXNFMP-SXX cable

Note: Thermal switch cannot be accessed by using 2090-XXNFMP-SXX cable.

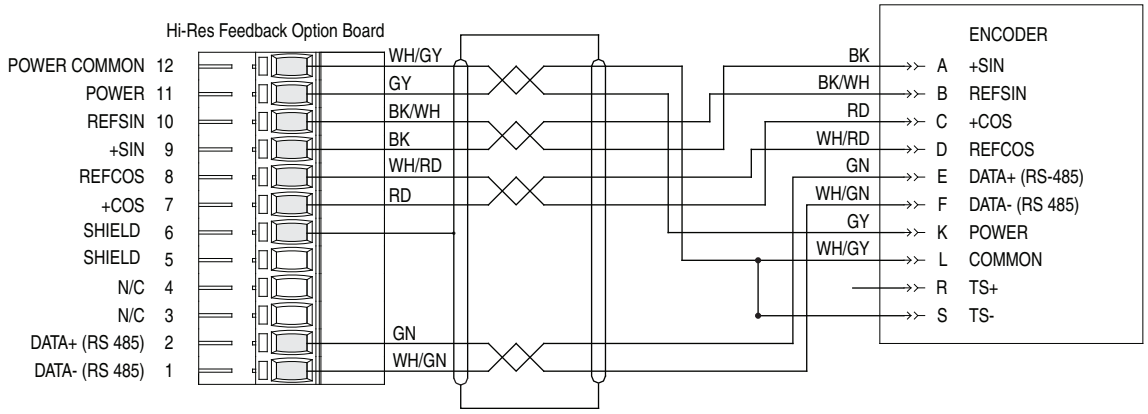

Stegmann Hi-Resolution Feedback Option Card Connection Examples

MPL-A3xx - MPL-A45xx and all MPG series motors with 2090-UXNFDMP-SXX cable

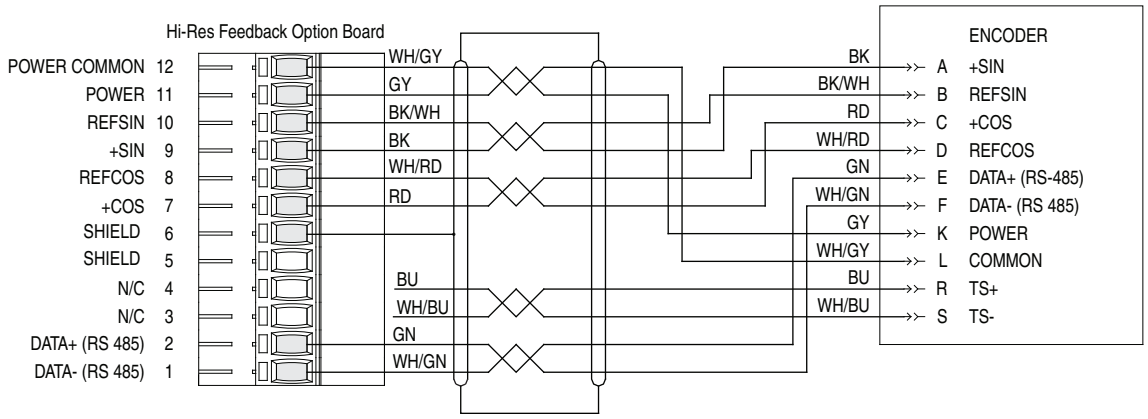

Stegmann shielded twisted-pair cable with 12-pin DIN style connector

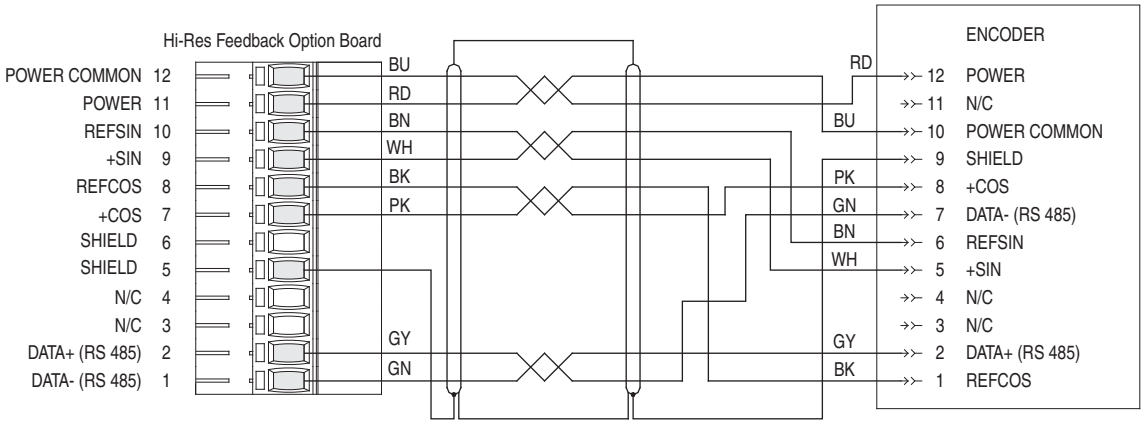

Stegmann Hi-Resolution Feedback Option Card Connection Examples

Stegmann shielded twisted-pair cable with 10-pin MS style connector

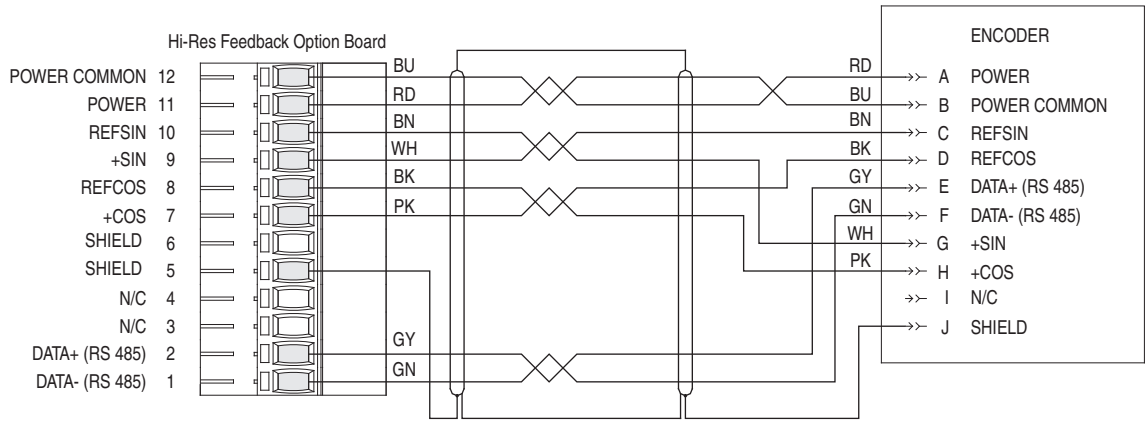

Stegmann shielded twisted-pair cable with 8-pin Berg style connector

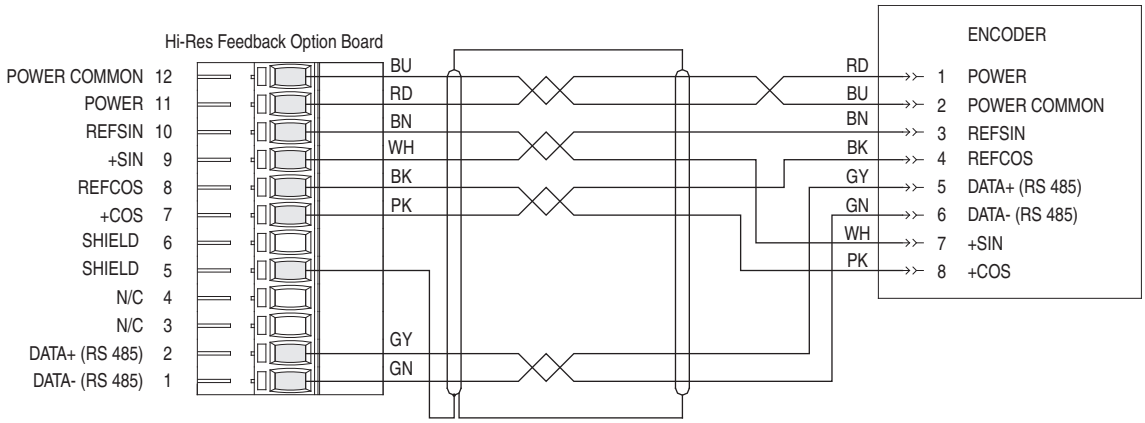

Pre-attached Stegmann shielded twisted-pair cable

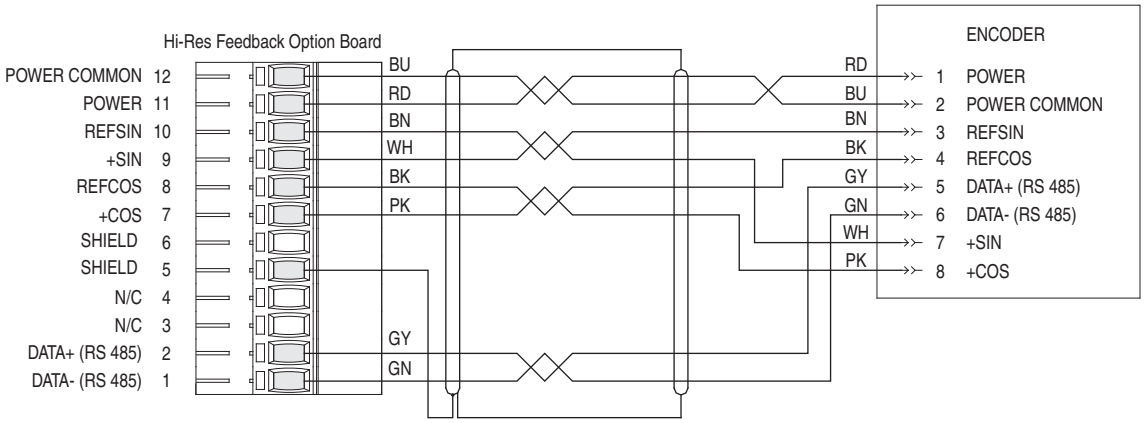

Resolver Feedback Option

TIP The PowerFlex 700S drive is not CE Certified when the resolver feedback module is installed in the drive.

Resolver Feedback Option Specifications

Consideration	Description
Excitation Frequency	2381…9300 Hz
Excitation Voltage	8…26V rms
Resolver Feedback Voltage	2V rms ± 300 mV

Compatible Resolvers for the Resolver Feedback Option Card

Manufacturer	Manufacturer Cat. No.	Parameter 277 [Reslvr0 Type Sel] Configuration	Notes
Tamagawa	TS-2014N181E32	1 - T2014/2087x1	x 1, flange-mounted enclosure
Tamagawa	TS-2014N182E32	2 - T2014/2087x2	x 2, flange-mounted enclosure
Tamagawa	TS-2014N185E32	3 - T2014/2087x2	x 5, flange-mounted enclosure
Tamagawa	TS-2087N12E9	2 - T2014/2087x2	x 2, HD foot-mounted enclosure, double shaft
Tamagawa	TS-2087N1E9	1 - T2014/2087x1	x 1, HD foot-mounted enclosure
Tamagawa	TS-2087N2E9	2 - T2014/2087x2	x 2, HD foot-mounted enclosure
Tamagawa	TS-2087N5E9	3 - T2014/2087x2	x 5, HD foot-mounted enclosure
Tamagawa	TS-2087N11E9	1 - T2014/2087x1	x 1, HD foot-mounted enclosure, double shaft
Advanced Micro Controls Inc. (AMCI)	R11X-C10/7	14 - AmciR11XC107	

Allen-Bradley servo motors may be ordered with factory installed resolvers. The list of factory installed resolvers below are supported by the 700S Resolver Feedback Option card.

Motor / Resolver Type	Compatible	Parameter 277 [Reslvr0 Type Sel] Configuration	Notes
1326 AB 230V Primary Resolver	No	Not Supported	Receiver type resolver - not supported
1326 AB 460V Primary Resolver	Yes	9 - 1326Ax 460v	Transmitter type resolver - supported
1326 AB 460V Secondary Resolver	Yes	13 - Reserved	Secondary resolver is geared to motor - not intended for motor speed / position feedback Transmitter type resolver - supported
1326AD 230V Rare Earth Primary Resolver	No	Not Supported	Receiver type resolver - not supported
1326AH 460V Explosion Proof Motor Primary Resolver	Yes	9 - 1326Ax 460v	Transmitter type resolver - supported
1326AH 460V Explosion Proof Motor Secondary Resolver	Yes	N/A	Secondary resolver is geared to motor - not intended for motor speed / position feedback Transmitter type resolver - supported
1326AS 460V Rare Earth Primary Resolver	Yes	9 - 1326Ax 460v	Transmitter type resolver - supported
MPL 460V Primary Resolver	Yes	4 - MPL 460v	Transmitter type resolver - supported

Recommended Cable for the Resolver Feedback Card

Rockwell Automation strongly recommends the use of Reliance Electric 417900-207CG or Belden 9730 cable for installation, or an equivalent cable that meets these specifications:

- Three twisted pairs, 80°C, 300V
- Chrome FPR jacket, plenum rated
- Conductor size: 18 AWG
- Twists per inch: 2 or 3 twists per inch of wire lay per pair
- Capacitance per pair: not to exceed 30 pF per foot +/- 0.3 pF as read on a GEN_RAD model 1658 RLC Digibridge or equivalent
- Jacket thickness: 0.018 in.
- Capacitance difference pair-to-pair: not to exceed 0.6 pF per foot as read on a GEN_RAD Model 1658 RLC Digibridge or equivalent
- Resistance per 1000 feet: 17.15Ω +/- 10%
- Inductance per 1000 feet: 0.13 mH +/- 10% as read on a GEN_RAD model 1658 RLC Digibridge or equivalent
- Insulation thickness: 0.008 in.
- Conductor stranding 16/30

Resolver Feedback Option Terminal Designations

	Terminal	Signal	Description
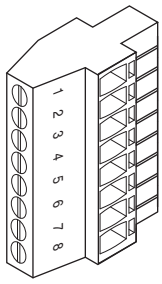	1	COS LOW	Negative Cosine signal
	2	COS HIGH	Positive Cosine signal
	3	SIN LOW	Negative Sine signal
	4	SHIELD	Connection point for resolver cable shield
	5	SIN HIGH	Positive Sine signal
	6	REF LOW	Negative Reference signal
	7	SHIELD	Connection point for resolver cable shield
	8	REF HIGH	Positive Reference signal

Resolver Feedback Option Connection Examples

Resolver Interface - Clockwise Rotation = Count Up

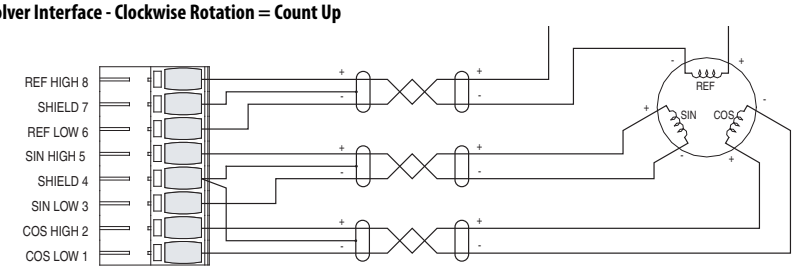

Resolver Interface - Clockwise Rotation = Count Down (Reverse Polarity of Sine or Cosine Signals)

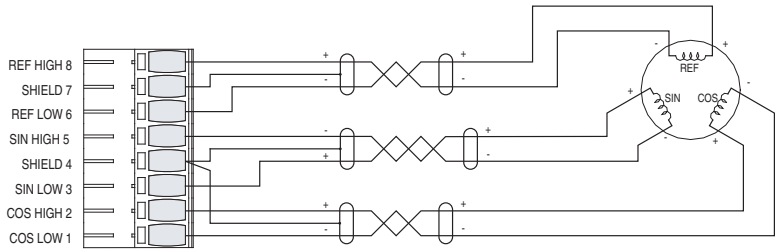

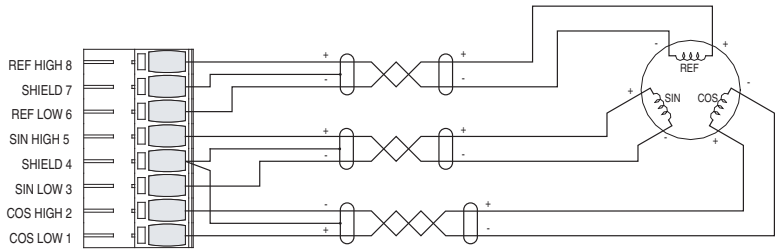

Multi-Device Interface (MDI) Feedback Option

MDI Option Specifications

Consideration	Description
Rotary Encoder Voltage Supply	11.5V DC @ 130 mA
Rotary Encoder Hi-Resolution Feedback	Sine/Cosine 1V P-P Offset 2.5
Rotary Encoder Maximum Cable Length	90m (295 ft)
Linear Encoder Maximum Cable Length	245m (800 ft)
Rotary Encoder RS-485 Interface	The MDI Option card obtains the following information via the Hiperface RS-485 interface shortly after powerup: • Address • Command Number • Mode • Number of turns • Number of Sine/Cos cycles • Checksum
Registration Inputs	High speed 12…24V DC sinking digital inputs

MDI Feedback Option Terminal Designations

	Terminal	Signal	Description
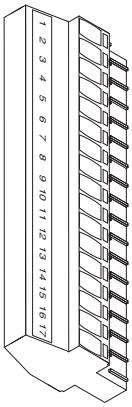	1	CHASSIS GND	Connection point for cable shields
	2	REGISTRATION-	Negative terminal for Linear Sensor registration strobe
	3	REGISTRATION+	Positive terminal for Linear Sensor registration strobe
	4	REGISTRATION-	Negative terminal for Rotary Encoder registration strobe
	5	REGISTRATION+	Positive terminal for Rotary Encoder registration strobe
	6	DATA-	Negative SSI terminal for Linear Sensor interface
	7	DATA+	Positive SSI terminal for Linear Sensor interface
	8	CLOCK-	Negative Clock terminal for Linear Sensor interface
	9	CLOCK+	Positive Clock terminal for Linear Sensor interface
	10	DATA- (RS485)	Negative DH485 terminal for Rotary Encoder interface
	11	DATA+ (RS485)	Positive DH485 terminal for Rotary Encoder interface
	12	+COS	Positive Cosine signal for Rotary Encoder interface
	13	REFCOS	Negative Cosine signal for Rotary Encoder interface
	14	+SIN	Negative Sine signal for Rotary Encoder interface
	15	REFSIN	Positive Sine signal for Rotary Encoder interface
	16	POWER	Power supply for Rotary Encoder interface
	17	POWER COMMON	

Linear Sensors Supported by the MDI Option

Temposonics® R-Series Linear sensors with MTS® part numbers ending in 1S2G1102 work with the MDI Option.

Part Number Character(1)	Characteristic
1	Input Voltage = +24V DC
S	SSI output
2	Data Length = 24 Bits
G	Output Format = Gray Code
1	Resolution = 0.005 mm
1	Performance = Standard
02	Scale Orientation = Forward-acting Synchronized

(1) Temposonics® is a registered trademark of MTS Systems Corporation.

Rotary Encoders Supported by the MDI Option

IMPORTANT Please note that encoders must be ordered as "Single Ended" so that the RS-485 channel has the proper termination network installed at the factory.

Recommended Cables and Wiring Diagrams for the MDI Option Card

Rotary Encoder Model(1)	Resolution	Comment
Stegmann SINCOS SCS-60, SCS-70, SCM-60, and SCM-70	512 sine cycles per revolution.	SCM-60 and SCM-70 have built-in mechanical turns counter.
Stegmann SINCOS SCS-KIT-101 and SCM-KIT-101	1024 sine cycles per revolution.	SCM-60 and SCM-70 have built-in mechanical turns counter.
Stegmann SINCOS SRS-50, SRS-60, SRM-50, and SRM-60	1024 sine cycles per revolution.	SRM-50 and SRM-60 have built-in mechanical turns counter.
Stegmann SINCOS SRS/SRM 25	1024 sine cycles per revolution	SRS25 and SRM25 have built-in mechanical turns counter. IP65 Protection Class. Size 25 square flange mounting.
Stegmann SINCOS SRS660	1024 sine cycles per revolution	Hollow-shaft up to 14 mm diameter
Stegmann SINCOS SHS-170	512 sine cycles per revolution.	While the software supports this encoder, the SHS-170 draws excessive current and should only be used with an external power supply.
Allen-Bradley 842HR	1024 sine cycles per revolution	Has built-in mechanical turns counter. IP65 Protection Class. Size 25 square flange mounting.

(1) SINCOS®, SINCODER® and LINCODER® are registered trademarks of Stegmann Inc.

If you are using this motor and feedback device:	Use this cable:	See this wiring diagram:
Allen-Bradley MPL-A/B3xx, -A/B4xx, -A/B45xx, -A/B5xx, and -A/B6xx motors with embedded Stegmann rotary encoder	Allen-Bradley 2090-CFBM7E7-CDAFXX	All MPL-A/B3xx, -A/B4xx, -A/B45xx, -A/B5xx, and -B6xx motors with 2090-CFBM7E7-CDAFXX or 2090-CFBM7DF-CDAFXX cable on page 70
Allen-Bradley MPL-A/B3xx, -A/B4xx, -A/B45xx, -A/B5xx, and -A/B6xx motors with embedded Stegmann rotary encoder	Allen-Bradley 2090-CFMB7DF-CDAFXX	All MPL-A/B3xx, -A/B4xx, -A/B45xx, -A/B5xx, and -B6xx motors with 2090-CFBM7E7-CDAFXX or 2090-CFBM7DF-CDAFXX cable on page 70
HPK-Series motors with embedded Stegmann rotary encoder	Allen-Bradley 2090-XXNFMF-SXX	HPK-Series motors with 2090-XXNFMF-SXX cable on page 70
Temposonics R-Series Linear sensors with MTS part numbers ending in 1S2G1102	Mating MTS molded extension cable for RG connector or integral P cable	Linear Sensor connections with MDI RG connector or P integral cable on page 71
Allen-Bradley 1326AB-BXXXX-M2L, -M2KXL, -S2L, and -S2KXL motors with embedded Stegmann rotary encoder	Allen-Bradley 2090-CDNFDMP-SXX	Rotary Encoder connections for MPL-A5xx and MPL-Bxxx motors or 1326AB-BXXXX-M2L, -M2KXL, -S2L, and -S2KXL motors with 2090-CDNFDMP-SXX cable on page 71
Allen-Bradley MPL-A5xx and MPL-Bxxx motors motors with embedded Stegmann rotary encoder	Allen-Bradley 2090-CDNFDMP-SXX	Rotary Encoder connections for MPL-A5xx and MPL-Bxxx motors or 1326AB-BXXXX-M2L, -M2KXL, -S2L, and -S2KXL motors with 2090-CDNFDMP-SXX cable on page 71
Allen-Bradley 1326AB-BXXXX-M2L, -M2KXL, -S2L, and -S2KXL motors with embedded Stegmann rotary encoder	Allen-Bradley 2090-XXNFMP-SXX	Rotary Encoder connections for MPL-A5xx and MPL-Bxxx motors or 1326AB-BXXXX-M2L, -M2KXL, -S2L, and -S2KXL motors with 2090-XXNFMP-SXX cable on page 71
Allen-Bradley MPL-A5xx and MPL-Bxxx motors motors with embedded Stegmann rotary encoder	Allen-Bradley 2090-XXNFMP-SXX	Rotary Encoder connections for MPL-A5xx and MPL-Bxxx motors or 1326AB-BXXXX-M2L, -M2KXL, -S2L, and -S2KXL motors with 2090-XXNFMP-SXX cable on page 71
Allen-Bradley MPL-A3xx - MPL-A45xx and all MPG series motors with embedded Stegmann rotary encoder	Allen-Bradley 2090-XXNFMP-SXX	Rotary Encoder connections for MPL-A3xx - MPL-A45xx and all MPG series motors with 2090-XXNFMP-SXX cable on page 72
Allen-Bradley MPL-A3xx - MPL-A45xx and all MPG series motors with embedded Stegmann rotary encoder	Allen-Bradley 2090-UXNFDMP-SXX	Rotary Encoder connections for MPL-A3xx - MPL-A45xx and all MPG series motors with 2090-UXNFDMP-SXX cable on page 72
Any other motor with external Stegmann SHS-170 rotary encoder	Stegmann shielded twisted-pair cable with 12-pin DIN style connector	Stegmann shielded twisted-pair cable with 12-pin DIN style connector on page 72

If you are using this motor and feedback device:	Use this cable:	See this wiring diagram:
Any other motor with external Stegmann SCS-60, SCS-70, SCM-60 or SCM-70, SRS-50, SRS-60, SRM-60, SRM-60, SRS-25, SRM-25 or Allen-Bradley 842HR rotary encoder	Stegmann shielded twisted-pair cable with 10-pin MS style connector	Rotary Encoder connections with Stegmann shielded twisted-pair cable and 10-pin MS style connector on page 73
Any other motor with external Stegmann SCS-Kit 101 or SCK-Kit 101 rotary encoder	Stegmann shielded twisted-pair cable with 8-pin Berg style connector	Rotary Encoder connections with Stegmann shielded twisted-pair cable and 8-pin Berg style connector on page 73
Any other motor with external Stegmann SRS660 rotary encoder	Is available only with pre-attached Stegmann shielded twisted-pair cable of various lengths	Rotary Encoder connections with Stegmann pre-attached shielded twisted-pair cable on page 73

MDI Option Card Connection Examples

All MPL-A/B3xx, -A/B4xx, -A/B45xx, -A/B5xx, and -B6xx motors with 2090-CFBM7E7-CDAFXX or 2090-CFBM7DF-CDAFXX cable

Note: Thermal switch cannot be accessed by using 2090-CFBM7X7-CDAFXX cable.

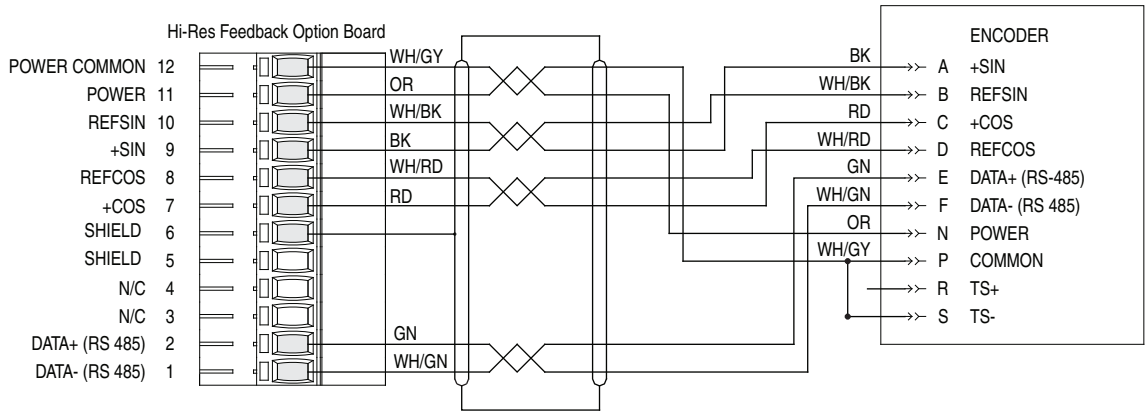

HPK-Series motors with 2090-XXNFMF-SXX cable

Note: Thermal switch cannot be accessed by using 2090-XXNFMF-SXX cable.

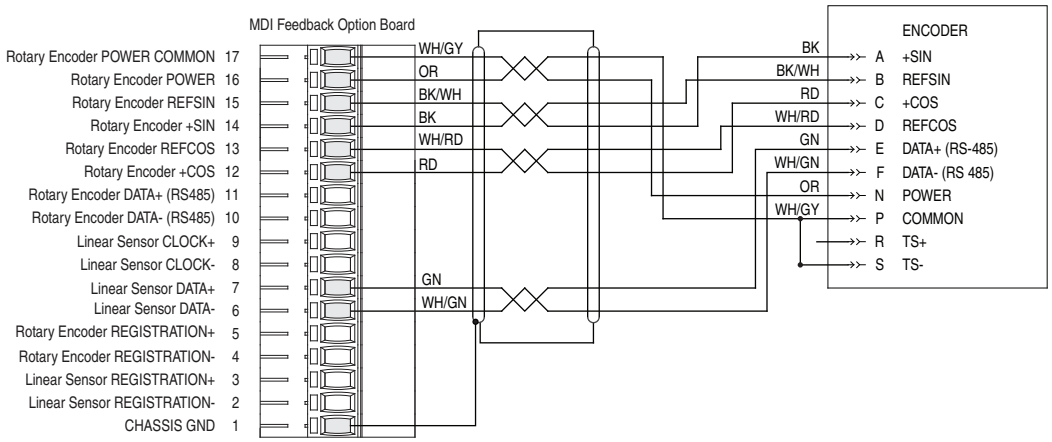

MDI Option Card Connection Examples

Linear Sensor connections with MDI RG connector or P integral cable

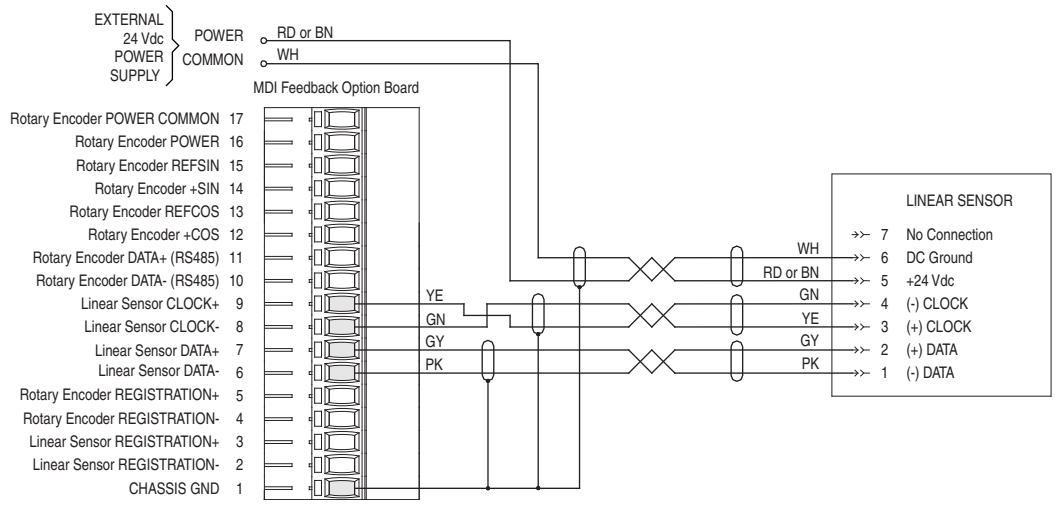

Rotary Encoder connections for MPL-A5xx and MPL-Bxxx motors or 1326AB-BXXXX-M2L, -M2KXL, -S2L, and -S2KXL motors with 2090-CDNFDMP-SXX cable

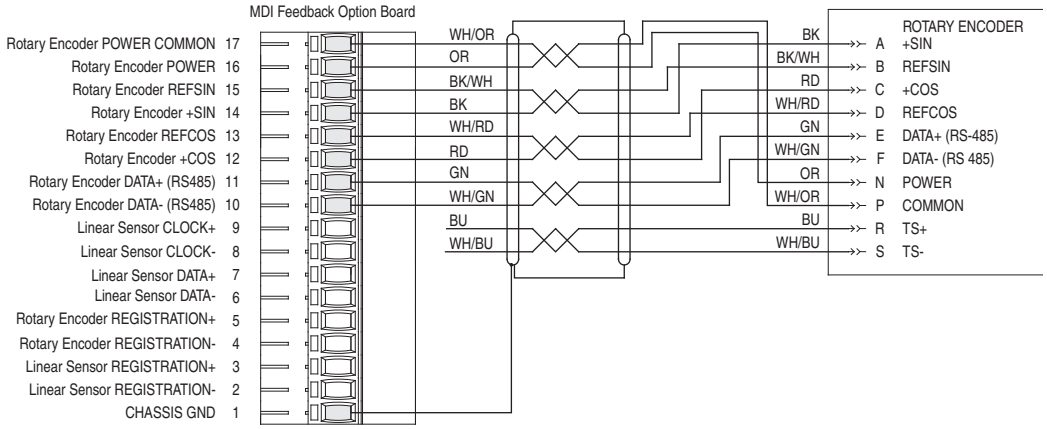

Rotary Encoder connections for MPL-A5xx and MPL-Bxxx motors or 1326AB-BXXXX-M2L, -M2KXL, -S2L, and -S2KXL motors with 2090-XXNFMP-SXX cable

Note: Thermal switch cannot be accessed by using 2090-XXNFMP-SXX cable.

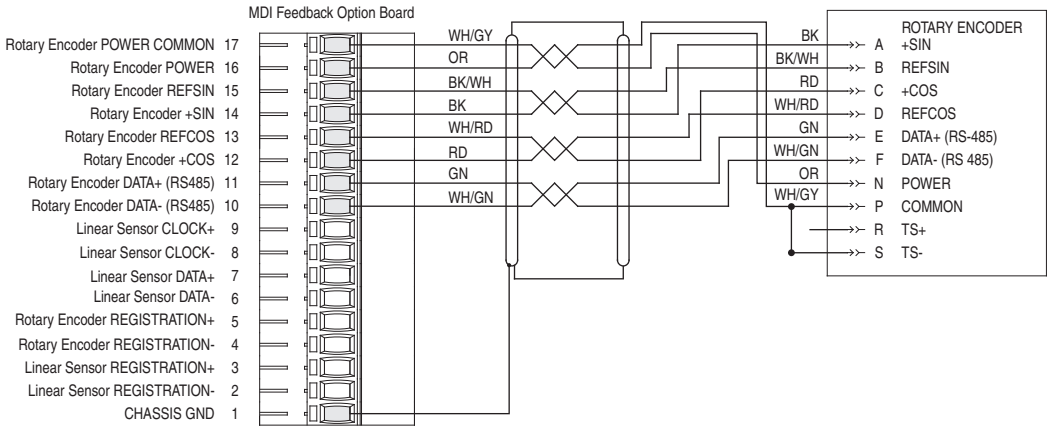

MDI Option Card Connection Examples

Rotary Encoder connections for MPL-A3xx - MPL-A45xx and all MPG series motors with 2090-XXNFMP-SXX cable

Note: Thermal switch cannot be accessed by using 2090-XXNFMP-SXX cable.

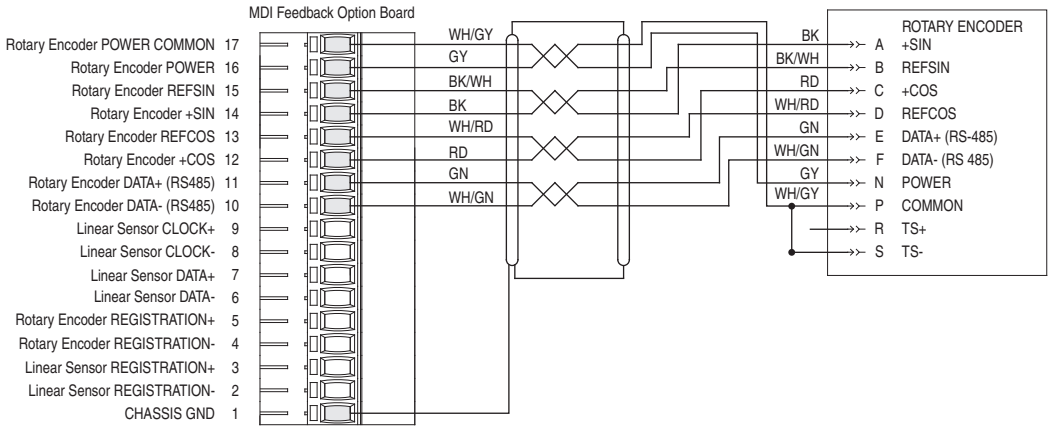

Rotary Encoder connections for MPL-A3xx - MPL-A45xx and all MPG series motors with 2090-UXNFDMP-SXX cable

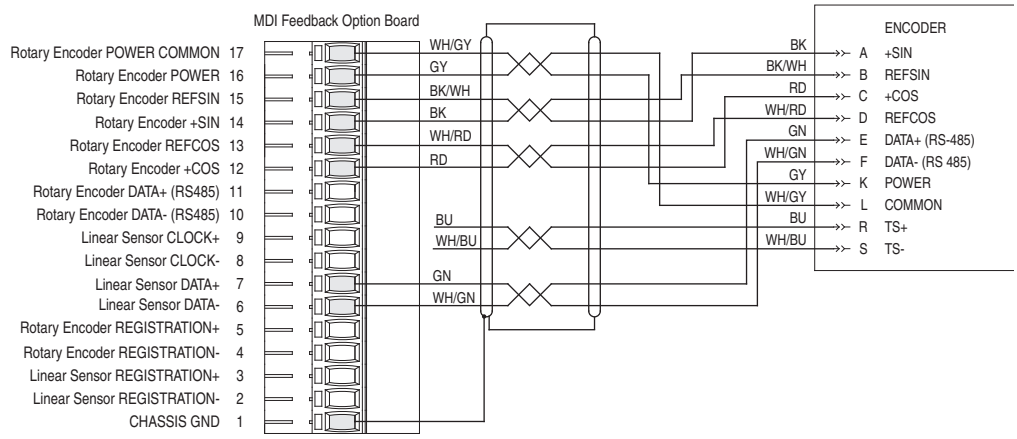

Stegmann shielded twisted-pair cable with 12-pin DIN style connector

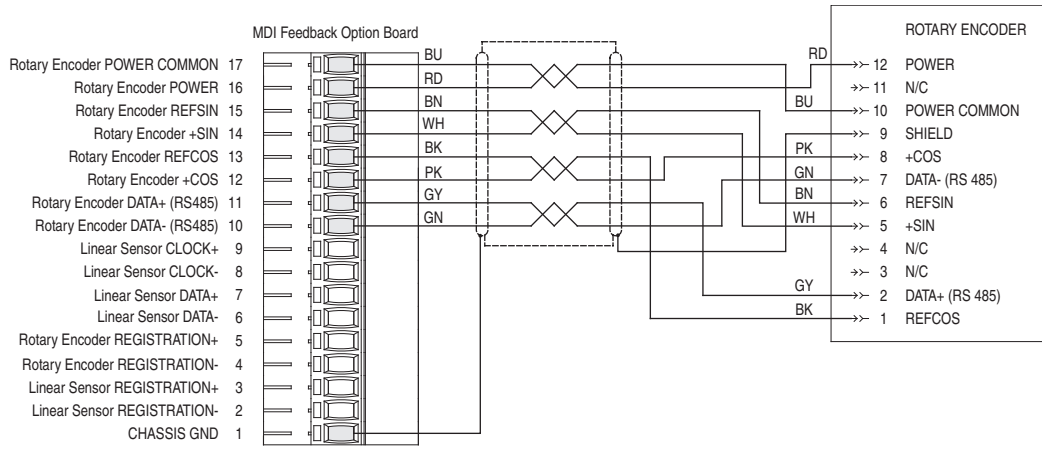

MDI Option Card Connection Examples

Rotary Encoder connections with Stegmann shielded twisted-pair cable and 10-pin MS style connector

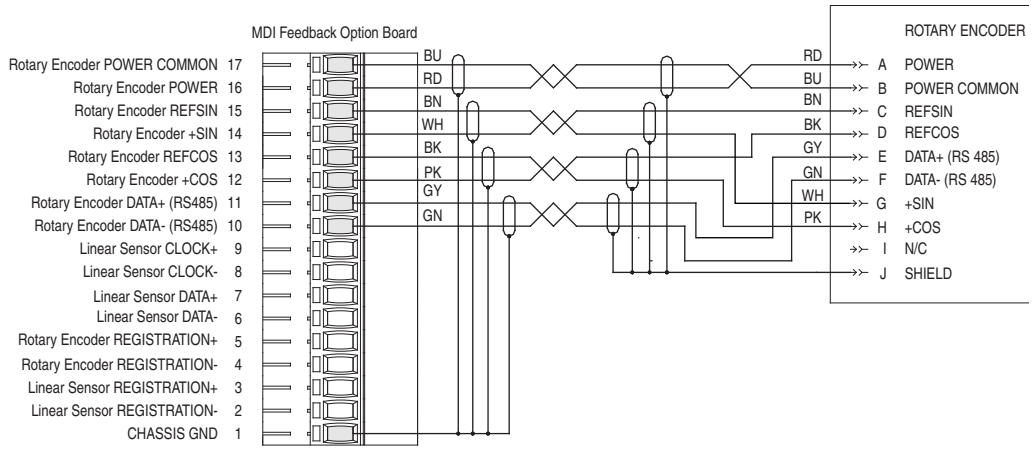

Rotary Encoder connections with Stegmann shielded twisted-pair cable and 8-pin Berg style connector

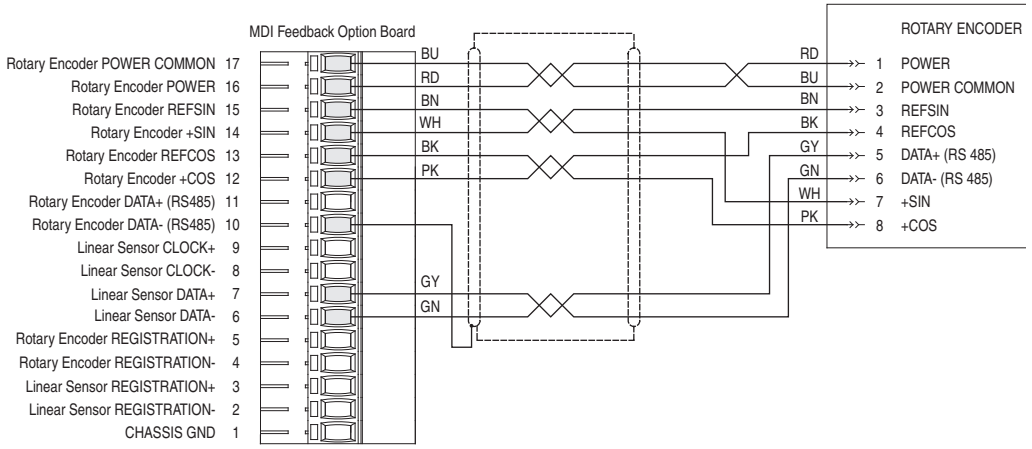

Rotary Encoder connections with Stegmann pre-attached shielded twisted-pair cable

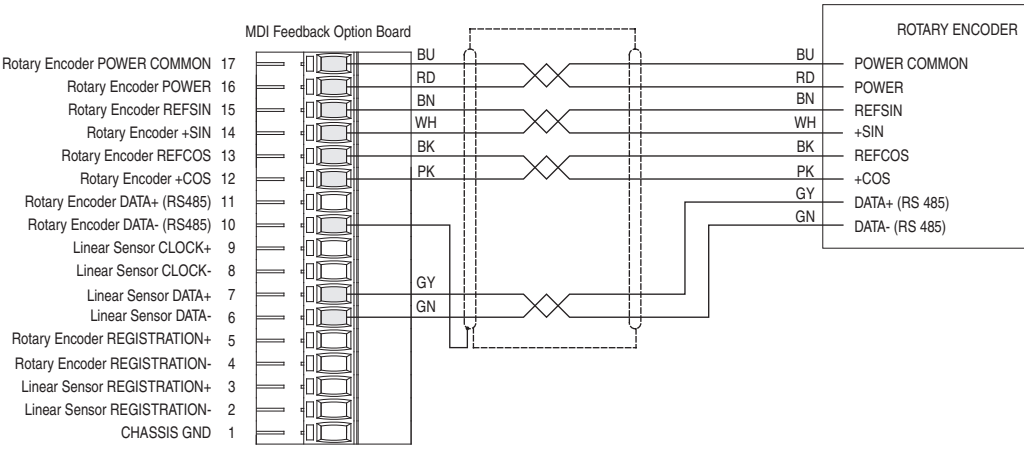

Registration Sensor connection

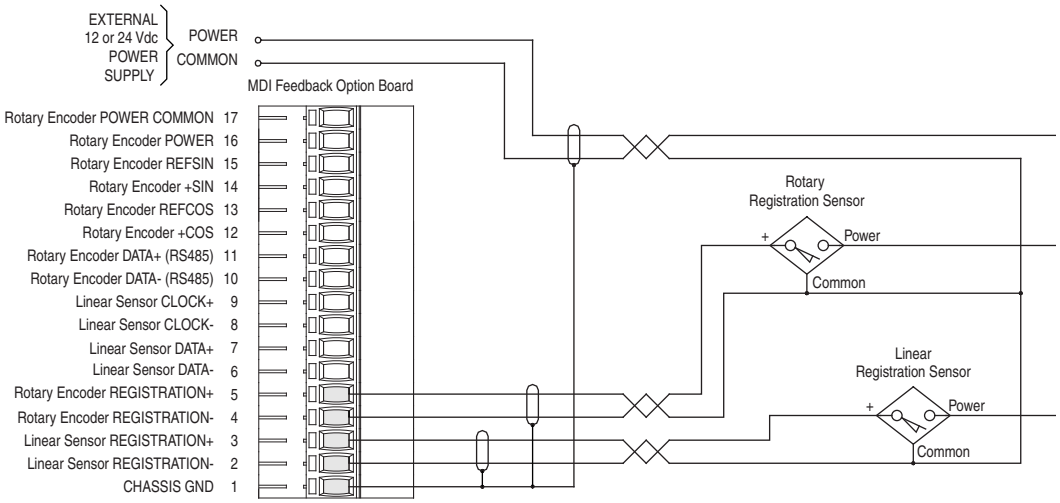

Rockwell Automation Support

Use the following resources to access support information.

Technical Support Center	Knowledgebase Articles, How-to Videos, FAQs, Chat, User Forums, and Product Notification Updates.	https://rockwellautomation.custhelp.com/
Local Technical Support Phone Numbers	Locate the phone number for your country.	http://www.rockwellautomation.com/global/support/get-support-now.page
Direct Dial Codes	Find the Direct Dial Code for your product. Use the code to route your call directly to a technical support engineer.	http://www.rockwellautomation.com/global/support/direct-dial.page
Literature Library	Installation Instructions, Manuals, Brochures, and Technical Data.	http://www.rockwellautomation.com/global/literature-library/overview.page
Product Compatibility and Download Center (PCDC)	Get help determining how products interact, check features and capabilities, and find associated firmware.	http://www.rockwellautomation.com/global/support/pcdc.page

Documentation Feedback

Your comments will help us serve your documentation needs better. If you have any suggestions on how to improve this document, complete the How Are We Doing? form at http://literature.rockwellautomation.com/idc/groups/literature/documents/du/ra-du002_-en-e.pdf.

Rockwell Automation maintains current product environmental information on its website at http://www.rockwellautomation.com/rockwellautomation/about-us/sustainability-ethics/product-environmental-compliance.page.

Allen-Bradley, DriveGuard, DriveLogix, PowerFlex, Rockwell Automation, Rockwell Software, SCANport, and Tech Connect are trademarks of Rockwell Automation, Inc.
Trademarks not belonging to Rockwell Automation are property of their respective companies.

Rockwell Otomasyon Ticaret A.Ş., Kar Plaza İş Merkezi E Blok Kat:6 34752 İçerenköy, İstanbul, Tel: +90 (216) 5698400

www.rockwellautomation.com

Power, Control and Information Solutions Headquarters

Americas: Rockwell Automation, 1201 South Second Street, Milwaukee, WI 53204-2496 USA, Tel: (1) 414.382.2000, Fax: (1) 414.382.4444
Europe/Middle East/Africa: Rockwell Automation NV, Pegasus Park, De Kleetlaan 12a, 1831 Diegem, Belgium, Tel: (32) 2 663 0600, Fax: (32) 2 663 0640
Asia Pacific: Rockwell Automation, Level 14, Core F, Cyberport 3, 100 Cyberport Road, Hong Kong, Tel: (852) 2887 4788, Fax: (852) 2508 1846

Publication 20D-IN024E-EN-P - March 2020
Supersedes Publication 20D-IN024D-EN-P- December 2017

Copyright © 2020 Rockwell Automation, Inc. All rights reserved. Printed in the U.S.A.