Installation Instructions

ArmorPoint AC Output Module, Series A

(Cat. No. 1738-OA2M12AC3)

The ArmorPoint I/O family (Cat. no. 1738) consists of modular I/O modules. The sealed IP67 housing of these modules requires no enclosure. (Note that environmental requirements other than IP67 may require an additional appropriate housing.) I/O connectors are sealed M12 AC keyed (micro) styles. The mounting base ships with the module. The 1738-OA2M12AC3 module is shown below.

1738-OA2M12AC3

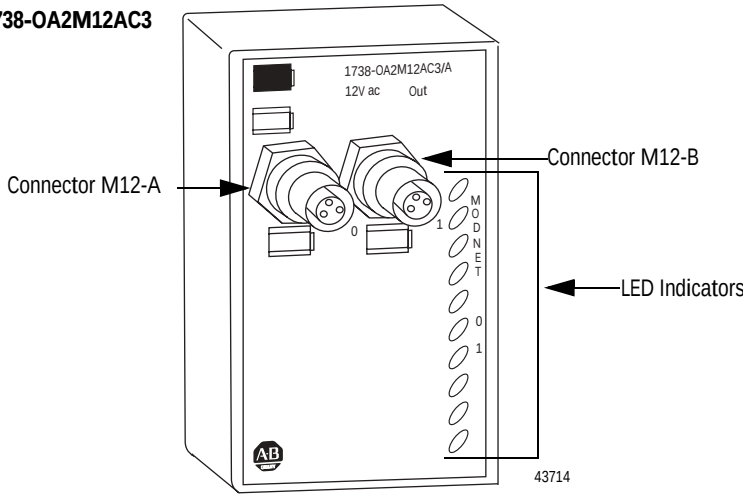

Publication 1738-IN007A-EN-E - June 2004

Important User Information

Solid state equipment has operational characteristics differing from those of electromechanical equipment. *Safety Guidelines for the Application, Installation and Maintenance of Solid State Controls* (Publication SGI-1.1 available from your local Rockwell Automation sales office or online at http://www.ab.com/manuals/gi) describes some important differences between solid state equipment and hard-wired electromechanical devices. Because of this difference, and also because of the wide variety of uses for solid state equipment, all persons responsible for applying this equipment must satisfy themselves that each intended application of this equipment is acceptable.

In no event will Rockwell Automation, Inc. be responsible or liable for indirect or consequential damages resulting from the use or application of this equipment.

The examples and diagrams in this manual are included solely for illustrative purposes. Because of the many variables and requirements associated with any particular installation, Rockwell Automation, Inc. cannot assume responsibility or liability for actual use based on the examples and diagrams.

No patent liability is assumed by Rockwell Automation, Inc. with respect to use of information, circuits, equipment, or software described in this manual.

Reproduction of the contents of this manual, in whole or in part, without written permission of Rockwell Automation, Inc. is prohibited.

Throughout this manual we use notes to make you aware of safety considerations.

WARNING	Identifies information about practices or circumstances that can cause an explosion in a hazardous environment, which may lead to personal injury or death, property damage, or economic loss.
IMPORTANT	Identifies information that is critical for successful application and understanding of the product.
ATTENTION	Identifies information about practices or circumstances that can lead to personal injury or death, property damage, or economic loss. Attentions help you: • identify a hazard • avoid a hazard • recognize the consequence
SHOCK HAZARD	Labels may be located on or inside the equipment to alert people that dangerous voltage may be present.
BURN HAZARD	Labels may be located on or inside the equipment to alert people that surfaces may be dangerous temperatures.

ATTENTION

Environment and Enclosure

This equipment is intended for use in overvoltage Category II applications (as defined in IEC publication 60664-1), at altitudes up to 2000 meters without derating.

This equipment is considered Group 1, Class A industrial equipment according to IEC/CISPR Publication 11. Without appropriate precautions, there may be potential difficulties ensuring electromagnetic compatibility in other environments due to conducted as well as radiated disturbance.

This equipment is supplied as "enclosed" equipment. It should not require additional system enclosure when used in locations consistent with the enclosure type ratings stated in the Specifications section of this publication. Subsequent sections of this publication may contain additional information regarding specific enclosure type ratings, beyond what this product provides, that are required to comply with certain product safety certifications.

NOTE: See NEMA Standards publication 250 and IEC publication 60529, as applicable, for explanations of the degrees of protection provided by different types of enclosure. Also, see the appropriate sections in this publication, as well as the Allen-Bradley publication 1770-4.1 ("Industrial Automation Wiring and Grounding Guidelines"), for additional installation requirements pertaining to this equipment.

ATTENTION

Preventing Electrostatic Discharge

This equipment is sensitive to electrostatic discharge, which can cause internal damage and affect normal operation. Follow these guidelines when you handle this equipment:

- Touch a grounded object to discharge potential static.
- Wear an approved grounding wriststrap.
- Do not touch connectors or pins on component boards.
- Do not touch circuit components inside the equipment.
- If available, use a static-safe workstation.
- When not in use, store the equipment in appropriate static-safe packaging.

Mount the I/O Base

To mount the ArmorPoint I/O base on a wall or panel, use the screw holes provided in the ArmorPoint base.

A mounting illustration for the ArmorPoint base with an adapter is shown below.

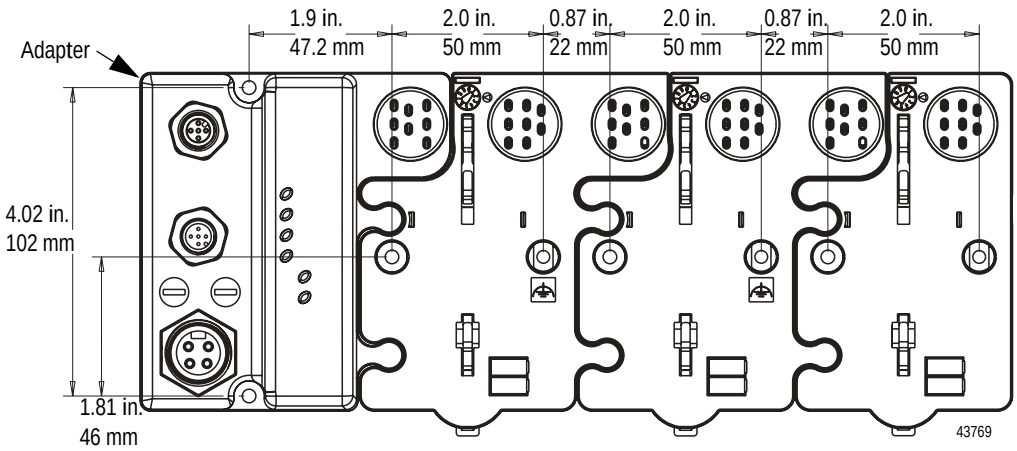

Install the mounting base as follows:

1. Lay out the required points as shown above in the drilling dimension drawing.
2. Drill the necessary holes for #8 (M4) machine or self-tapping screws.

3. Mount the base using #8 (M4) screws.

4. Ground the system using the ground lug connection. (The ground lug connection is also a mounting hole.)

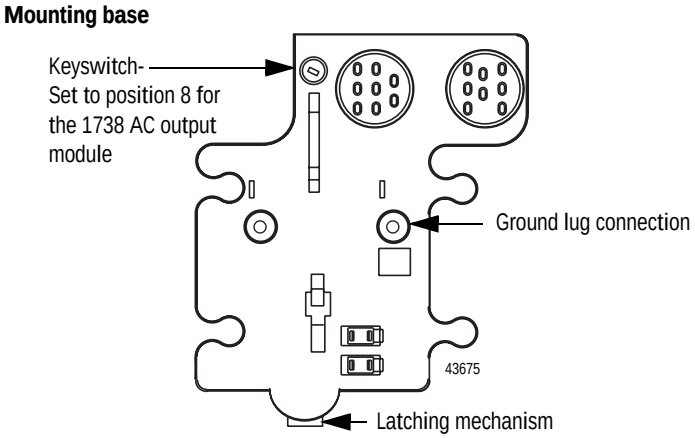

Install the ArmorPoint AC Output Module

To install the ArmorPoint AC output module, proceed as follows.

1. Using a bladed screwdriver, rotate the keyswitch on the mounting base clockwise until the number 8 aligns with the notch in the base.

2. Position the module vertically above the mounting base. The module will bridge two bases.

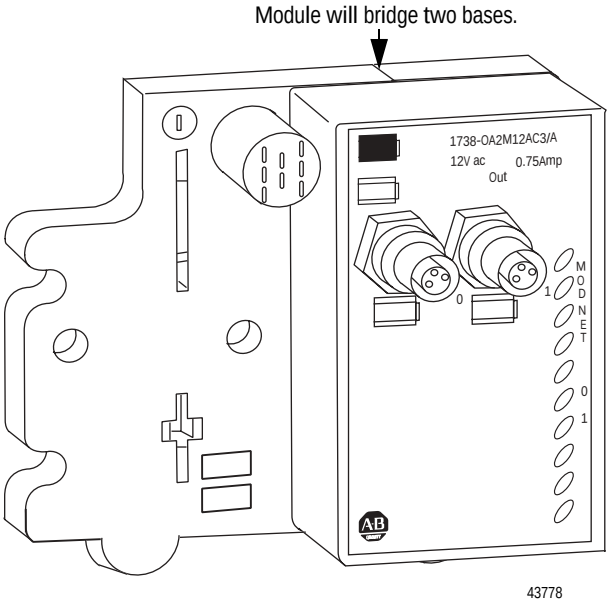

3. Push the module down until it engages the latching mechanism. You will hear a clicking sound when the module is properly engaged.

   The locking mechanism will lock the module to the base.

Remove the ArmorPoint AC Output Module From the Mounting Base

To remove the module from the mounting base:

1. Put a flat blade screwdriver into the slot of the orange latching mechanism.
2. Push the screwdriver toward the I/O module to disengage the latch.

   The module will lift up off the base.
3. Pull the module off of the base.

Wire the AC Output Module

Following are wiring instructions for the ArmorPoint AC output module.

1738-OA2M12AC3

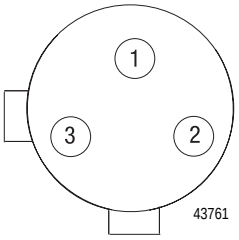

(view into connector)
Pin 1 - Chassis
Pin 2 - L2/N
Pin 3 - Output 0 (M12-A)
Output 1 (M12-B)

ATTENTION

Make sure all connectors and caps are securely tightened to properly seal the connections against leaks and maintain IP67 requirements.

Communicate With Your Module

I/O messages are sent to (consumed) and received from (produced) the ArmorPoint I/O module. These messages are mapped into the processor's memory. This ArmorPoint I/O output module consumes 1 byte of output data (scanner Tx - status). It does not produce data (scanner Rx).

Default Data Map for the ArmorPoint AC Output Modules

1738-OA2M12AC3

Message size: 1 Byte

	7	6	5	4	3	2	1	0	
Produces (scanner Rx)	Not Used								Channel status
Consumes (scanner Tx)	Not Used						Ch1	Ch0	Output state
Where: 0 = off, 1 = on									

Troubleshoot with the Indicators

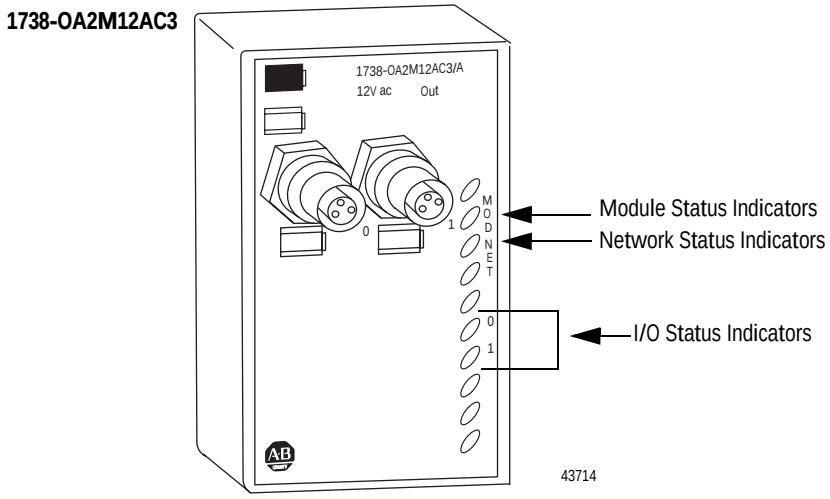

Indication	Probable Cause
Module Status	
Off	No power applied to device
Green	Device operating normally
Flashing Green	Device needs commissioning due to missing, incomplete, or incorrect configuration
Flashing Red	Recoverable fault
Red	Unrecoverable fault - may require device replacement
Flashing Red/Green	Device is in self-test

Indication	Probable Cause
Network Status	
Off	Device is not on line: - Device has not completed dup_MAC-id test. - Device not powered - check module status indicator.
Flashing Green	Device is on line but has no connections in the established state.
Green	Device is on line and has connections in the established state.
Flashing Red	One or more I/O connections in timed-out state.
Red	Critical link failure - failed communication device. Device detected error that prevents it from communicating on the network.
Flashing Red/Green	Communication faulted device - the device has detected a network access error and is in communication faulted state. Device has received and accepted an Identity Communication Faulted Request - long protocol message.

Indication	Probable Cause
I/O Status	
Off	Output is inactive
Yellow	Output is active and under control

Specifications

Following are specifications for the 1738 ArmorPoint AC output module.

ArmorPoint AC Output Module	
Outputs per Module	2 (1 group of 2) nonisolated, sourcing
On-state Voltage Rating Maximum Minimum Nominal	 264V ac 74V ac 120/220V ac
On-state Voltage Drop, Maximum	1.0V @ 0.75A
On-state Current Maximum Minimum	 750 mA per channel 10 mA per channel
Output Current Rating	1.5 A (2 channels @ 0.75A each)
Surge Current, Maximum	16 A for 100 ms, repeatable every 10s
Delay Time OFF to ON[1], Maximum	1/2 cycle
Delay Time, ON to OFF[1], Maximum	1/2 cycle
Off-state Leakage, Maximum	2.7 mA
External AC Power Supply Voltage	120/220V ac, 60Hz nominal
External AC Power Supply Voltage Range	85-264V ac, 47-63Hz
Keyswitch Position	8
General Specifications	
LED Indicators	2 yellow output status, logic side 1 green/red network status, logic side 1 green/red module status, logic side
PointBus Current	75 mA @ 5V dc
Power Dissipation, Maximum	0.8 W @ 264V ac
Thermal Dissipation, Maximum	2.7 BTU/hr. @ 264V ac
Isolation Voltage (continuous-voltage withstand rating)	120/220V rms Tested at 1500V ac rms for 60s
Dimensions Inches (Metric)	1.25H x 2.63W x 4.25D (31.75H x 66.80W x 107.95D)
Operating Temperature	IEC 60068-2-1 (Test Ad, Operating Cold), IEC 60068-2-2 (Test Bd, Operating Dry Heat), IEC 60068-2-14 (Test Nb, Operating Thermal Shock): -20 to 60°C (-4 to 140°F)
Storage Temperature	IEC 60068-2-1 (Test Ab, Un-packaged Non-operating Cold), IEC 60068-2-2 (Test Bb, Un-packaged Non-operating Dry Heat), -40 to 85°C (-40 to 185°F)

General Specifications (continued)	
Relative Humidity	IEC 60068-2-30 (Test Db, Un-packaged Non-operating Damp Heat): 5-95% non-condensing
Shock	IEC60068-2-27 (Test Ea, Unpackaged Shock): Operating 30g Non-operating 50g
Vibration	IEC60068-2-6 (Test Fc, Operating): 5g @ 10-500Hz
ESD Immunity	IEC 61000-4-2: 6kV contact discharges 8kV air discharges
Radiated RF Immunity	IEC 61000-4-3: 10V/m with 1kHz sine-wave 80%AM from 80MHz to 1000MHz 10V/m with 200Hz 50% Pulse 100%AM at 900Mhz
EFT/B Immunity	IEC 61000-4-4: ±3kV at 5kHz on signal ports
Surge Transient Immunity	IEC 61000-4-5: ±1kV line-line(DM) and ±2kV line-earth(CM) on signal ports
Conducted RF Immunity	IEC 61000-4-6: 10Vrms with 1kHz sine-wave 80%AM from 150kHz to 80MHz
Emissions	CSPR 11: Group 1, Class A
Enclosure Type Rating	Meets IP65/66/67 (when marked)
Mounting Base Screw Torque	#8 screw, 7.5 in. lbs. in Aluminum, 16 in. lbs. in Steel
Wiring Category[2]	1 - on signal ports
Weight Imperial (Metric)	0.637 lb. (0.289 kg)
Certifications: (when product is marked)	c-UL-us UL Listed Industrial Control Equipment, certified for US and Canada CE[3] European Union 89/336/EEC EMC Directive, compliant with: EN 61000-6-4; Industrial Emissions EN 50082-2; Industrial Immunity EN 61326; Meas./Control/Lab., Industrial Requirements EN 61000-6-2; Industrial Immunity European Union 73/23/EEC LVD Directive, compliant with: EN 61131-2; Programmable Controllers C-Tick[3] Australian Radiocommunications Act, compliant with: AS/NZS CISPR 11; Industrial Emissions

1. OFF to ON or ON to OFF delay is time from a valid output "on" or "off" signal to output energization or de-energization.

2. Use this Conductor Category information for planning conductor routing. Refer to Publication 1770-4.1, "Industrial Automation Wiring and Grounding Guidelines".

3. See the Product Certification link at www.ab.com for Declarations of Conformity, Certificates, and other certification details.

Notes:

Rockwell Automation Support

Rockwell Automation provides technical information on the web to assist you in using our products. At http://support.rockwellautomation.com, you can find technical manuals, a knowledge base of FAQs, technical and application notes, sample code and links to software service packs, and a MySupport feature that you can customize to make the best use of these tools.

For an additional level of technical phone support for installation, configuration and troubleshooting, we offer TechConnect Support programs. For more information, contact your local distributor or Rockwell Automation representative, or visit http://support.rockwellautomation.com.

Installation Assistance

If you experience a problem with a hardware module within the first 24 hours of installation, please review the information that's contained in this manual. You can also contact a special Customer Support number for initial help in getting your module up and running:

United States	1.440.646.3223 Monday – Friday, 8am – 5pm EST
Outside United States	Please contact your local Rockwell Automation representative for any technical support issues.

New Product Satisfaction Return

Rockwell tests all of our products to ensure that they are fully operational when shipped from the manufacturing facility. However, if your product is not functioning and needs to be returned:

United States	Contact your distributor. You must provide a Customer Support case number (see phone number above to obtain one) to your distributor in order to complete the return process.
Outside United States	Please contact your local Rockwell Automation representative for return procedure.

ArmorPoint is a trademark of Rockwell Automation.

www.rockwellautomation.com

Power, Control and Information Solutions Headquarters

Americas: Rockwell Automation, 1201 South Second Street, Milwaukee, WI 53204-2496 USA, Tel: (1) 414.382.2000, Fax: (1) 414.382.4444
Europe/Middle East/Africa: Rockwell Automation, Vorstlaan/Boulevard du Souverain 36, 1170 Brussels, Belgium, Tel: (32) 2 663 0600, Fax: (32) 2 663 0640
Asia Pacific: Rockwell Automation, Level 14, Core F, Cyberport 3, 100 Cyberport Road, Hong Kong, Tel: (852) 2887 4788, Fax: (852) 2508 1846

Publication 1738-IN007A-EN-E - June 2004 PN 957824-33

Copyright © 2004 Rockwell Automation, Inc. All rights reserved. Printed in the U.S.A.