User Manual

Allen-Bradley

E3 & E3 Plus Solid-State Overload Relay

Catalog Numbers 193/592-EC1, -EC2, -EC3, -EC5

Allen-Bradley • Rockwell Software

Rockwell Automation

Important User Information

Solid-state equipment has operational characteristics differing from those of electromechanical equipment. Safety Guidelines for the Application, Installation and Maintenance of Solid State Controls (publication SGI-1.1 available from your local Rockwell Automation sales office or online at http://www.rockwellautomation.com/literature/) describes some important differences between solid-state equipment and hard-wired electromechanical devices. Because of this difference, and also because of the wide variety of uses for solid-state equipment, all persons responsible for applying this equipment must satisfy themselves that each intended application of this equipment is acceptable.

In no event will Rockwell Automation, Inc. be responsible or liable for indirect or consequential damages resulting from the use or application of this equipment.

The examples and diagrams in this manual are included solely for illustrative purposes. Because of the many variables and requirements associated with any particular installation, Rockwell Automation, Inc. cannot assume responsibility or liability for actual use based on the examples and diagrams.

No patent liability is assumed by Rockwell Automation, Inc. with respect to use of information, circuits, equipment, or software described in this manual.

Reproduction of the contents of this manual, in whole or in part, without written permission of Rockwell Automation, Inc., is prohibited.

Throughout this manual, when necessary, we use notes to make you aware of safety considerations.

	WARNING: Identifies information about practices or circumstances that can cause an explosion in a hazardous environment, which may lead to personal injury or death, property damage, or economic loss.
	ATTENTION: Identifies information about practices or circumstances that can lead to personal injury or death, property damage, or economic loss. Attentions help you identify a hazard, avoid a hazard, and recognize the consequence
	SHOCK HAZARD: Labels may be on or inside the equipment, for example, a drive or motor, to alert people that dangerous voltage may be present.
	BURN HAZARD: Labels may be on or inside the equipment, for example, a drive or motor, to alert people that surfaces may reach dangerous temperatures.
IMPORTANT	Identifies information that is critical for successful application and understanding of the product.

Allen-Bradley, Rockwell Software, Rockwell Automation, and TechConnect are trademarks of Rockwell Automation, Inc.

Trademarks not belonging to Rockwell Automation are property of their respective companies.

Manual Objectives 9
Who Should Use This Manual 9
Vocabulary. 9
Conventions 9
Reference Manuals 9

Product Overview

Introduction 11
Description 11
Catalog Number Explanation 12
Single-/Three-Phase Operation. 12
Protection & Warning Functions 12
Parameter Monitoring 13
Current-Based Operational Data 13
Diagnostic Parameters 13
Voltage Parameters 13
Power Parameters. 13
Overload Relay Features 14
Trip Relay 14
Inputs & Outputs 14
User Interface 15
DeviceNet Compatibility 16
Flash Memory 16

Installation & Wiring

Introduction 17
Receiving 17
Unpacking/Inspecting 17
Storing 17
General Precautions 18
Starter Assembly 18
Installation. 18
Approximate Dimensions 21
Separate Panel Adapter 24
Approximate Dimensions 24
Voltage Input Module 26
Specifications 26
Power Terminals 26
Three-Pole Terminal Blocks 27
Terminal Lug Kits 27
Control, DeviceNet, & Voltage Input Module Terminals 27
Terminal Designations. 29
Control Terminals. 29
DeviceNet Terminals 29
Grounding. 29
Short-Circuit Ratings 30
Short-Circuit Ratings 30
High-Fault Short-Circuit Ratings 31
Fuse Coordination 32

Typical Motor Connections 34
Three-Phase Direct On-Line (DOL) & Single-Phase Full Voltage 34
External Line Current Transformer Application 34
Specifications 34
Installation Requirements 35
External Potential Transformer (PT) Connection 36
Core Balanced Ground Fault Sensor Application 37
Typical Control Circuit 41
Wiring Diagrams 41
External/Remote Reset (FRN 3.001 & Later) 44

Protective Trip & Warning Functions

Introduction 45
Trip Enable 45
Warning Enable 45
Overload Protection 45
Overload Trip 45
FLA Setting 46
CT Ratio 47
Trip Class 47
Trip Curves 47
Auto/Manual Reset 49
Overload Warning 50
Overload Diagnostics 51
Non-Volatile Thermal Memory 51
Phase Loss Protection 51
Phase Loss Trip 51
Ground Fault Protection (E3 Plus) 52
Ground Fault Setting Range 53
Ground Fault Trip 53
Ground Fault Trip Inhibit 54
Ground Fault Warning 55
Ground Fault Filter 55
Stall Protection 56
Stall Time 56
Jam Protection (High Overload) 57
Jam Trip 57
Jam Warning 58
Underload Protection 58
Underload Trip 58
Underload Warning 59
PTC Trip 61
PTC Warning 62
Current Imbalance Protection 62
Current Imbalance Trip 62
Current Imbalance Warning 63
Communication Fault Protection 64

Comm Fault Trip 64
Comm Fault Warning 65
Communication Idle Protection 65
Comm Idle Trip 65
Comm Idle Warning 66
Remote Trip 66
Voltage Protection 67
Under Voltage (UV) Trip 67
Under Voltage (UV) Warning 68
Over Voltage (OV) Trip 68
Over Voltage (OV) Warning 69
Voltage Unbalance Protection 69
Voltage Unbalance Trip 69
Voltage Unbalance Warning 70
Voltage Rotation Protection 71
Voltage Rotation Trip 71
Voltage Rotation Warning 71
Frequency Protection 72
Under Frequency (UF) Trip 72
Under Frequency Warning 72
Over Frequency (OF) Trip 73
Over Frequency (OF) Warning 73
Voltage Input Module Detection 74
Voltage Hardware Trip 74
Voltage Hardware Warning 74
Real Power (kW) Protection 75
Under Real Power Trip 75
Under Real Power Warning 75
Over Real Power Trip 76
Over Real Power Warning 76
Reactive Power (kVAR) Protection 77
Under Reactive Power Consumed Trip 77
Under Reactive Power Consumed Warning 78
Over Reactive Power Consumed Trip 78
Over Reactive Power Consumed Warning 79
Under Reactive Power Generated Trip 79
Under Reactive Power Generated Warning 80
Over Reactive Power Generated Trip 80
Over Reactive Power Generated Warning 81
Apparent Power (kVA) Protection 81
Under Apparent Power Trip 82
Under Apparent Power Warning 82
Over Apparent Power Trip 83
Over Apparent Power Warning 83
Power Factor Protection 84
Under Power Factor Lagging Trip 84

Under Power Factor Lagging Warning 85
Over Power Factor Lagging Trip 85
Over Power Factor Lagging Warning 86
Under Power Factor Leading Trip 86
Under Power Factor Leading Warning 87
Over Power Factor Leading Trip 87
Over Power Factor Leading Warning 88
Protective Trip & Warning Summary 88
Preventive Maintenance Diagnostics (E3 Overload Relays Series C & Later) 91
Monitoring 91
Start Inhibit 91
Start Inhibit Trip 91
Preventive Maintenance Flags 92
Queue Clearing 93

DeviceNet™ Node Commissioning

Introduction 95
Setting the Hardware Switches (Series B & Later) 95
Using RSNetWorx for DeviceNet 96
Commissioning the Protection Functions 103

Programmable Parameters

Introduction 105
Programming 105
Program Lock 105
Reset to Default Factory Settings 105
Parameter Group Listing 105
Overload Setup Group 111
Advanced Setup Group 114
Reset/Lock Group 123
DeviceNet Setup Group 125
Output Setup Group 127
DeviceLogix Group — E3 Plus 131

Monitoring Parameters

Introduction 135
Phase Current Reporting 135
Current Range 135
Reporting Accuracy 136
Ground Fault Current Reporting 137
Current Range 137
Frequency Range 137
Diagnostic Parameters 137
Monitor Group 138

Voltage Parameters

Introduction 147
Phase Voltage Reporting 147

Voltage Range 147
Voltage Accuracy 148
Voltage Monitor Group. 148
Voltage Setup Group 151

Power Parameters

Introduction 159
Phase Power Reporting 159
Power Range 159
Power Accuracy 161
Power Monitor Group 161
Power Setup Group. 171

Trip History and Snapshot

Trip and Warning History 183
TripWarn History Group 183
Trip Snapshot. 189
Trip Snapshot Group 190

Logic Controller Communication Examples

Introduction 193
I/O Messaging 193
Explicit Messaging. 195
Reading Device Status using the Parameter Object Class (0x0F) . 195
Reading Device Status using the Control Supervisor Object Class (0x29) 197
Reading the Trip Class using the Overload Object Class (0x2C) . 199
Reading a Group of Parameters using the E3 Status Object Class (0x0375) 201

Using DeviceLogix™

Introduction 205
DeviceLogix Programming 206
DeviceLogix Programming Example. 206

Troubleshooting

Introduction 213
Advisory LEDs 213
Trip/Warn LED 213
Network Status LED. 215
OUT A & OUT B LEDs. 215
IN 1,2,3 & 4 LEDs. 215
Power-Up Sequence 215
DeviceNet Modes of Operation 216
Power-Up Reset Mode 216
Run Mode 216
Recoverable Error Mode 217
Unrecoverable Error Mode 217
Resetting a Trip 217
Trip/Warn LED Troubleshooting Procedures 218

DeviceNet Troubleshooting Procedures 222
Loss of Node Address 222
Input and Output Troubleshooting Procedures 222

Specifications

Electrical Specifications 225
Environmental Specifications 227
Electromagnetic Compatibility Specifications. 227
Functionality Specifications 228
Protection 229

DeviceNet™ Information

Electronic Data Sheets (EDS) 231
Product Codes 231
DeviceNet Objects 232
Identity Object – Class Code 0x01. 233
Message Router – Class Code 0x02 234
DeviceNet Object – Class Code 0x03 234
Assembly Object – Class Code 0x04 235
Output Assemblies 236
Input Assemblies 237
Connection Object – Class Code 0x05. 239
Discrete Input Point Object – Class Code 0x08. 243
Discrete Output Point Object – Class Code 0x09. 243
Parameter Object – Class Code 0x0F 244
Parameter Group Object – Class Code 0x10. 245
Discrete Output Group Object - CLASS CODE 0x001E 246
Control Supervisor Object – Class Code 0x29 247
Control Supervisor ODVA Fault and Warning Codes 250
Acknowledge Handler Object – 0x2B. 251
Overload Object – Class Code 0x2C. 251
DPI Fault Object - CLASS CODE 0x0097. 254
DPI Warning Object - CLASS CODE 0x0098 257
DeviceNet Interface Object – Class Code 0xB4. 260
MCC Object - CLASS CODE 0x00C2 261
Logic Supervisor Object - CLASS CODE 0x030E 261
E3 Status Object - CLASS CODE 0x0375 262

CE Compliance

EC Directive Compliance. 269
EMC Directive. 269
Low Voltage Directive 270

Two-Speed Applications

Introduction 271
External Control Applications. 271
Output Control Applications 271

Accessories

Accessories. 273

Manual Objectives

The purpose of this manual is to provide you with the necessary information to apply the E3 Overload Relay with DeviceNet communications. Described in this manual are methods for installing, configuring, and troubleshooting.

IMPORTANT Read this manual in its entirety before installing, operating, servicing, or initializing the E3 Overload Relay.

Who Should Use This Manual

This manual is intended for qualified personnel responsible for setting up and servicing these devices. You must have previous experience with and a basic understanding of communications technology, configuration procedures, required equipment, and safety precautions.

To make efficient use of the E3 Overload Relay, you must be able to program and operate devices with communications and have a basic understanding of the E3 Overload Relay's parameter settings and functions. You should also understand DeviceNet network operations, including how slave devices operate on the network and communicate with a DeviceNet master.

Vocabulary

In this manual, we refer to the:

- E3 Overload Relay as it applies to both the E3 and E3 Plus Overload Relays.
- E3 Plus Overload Relay when features and/or functions apply specifically to it.

Conventions

Parameter names are shown in italic typeface.

E3 refers to the overload relays E3 and E3 Plus. "E3" is the standard version. "E3 Plus" is the enhanced version.

Reference Manuals

For SLC 500 and 1747-SDN information:

- *DeviceNet Scanner Module Installation Instructions* Publication 1747-IN058E-EN-P
- *DeviceNet Scanner Module User Manual* Publication 1747-UM655B-EN-P

For PLC5 and 1771-SDN information:

- *DeviceNet Scanner Module Installation Instructions* Publication 1771-5.14
- *DeviceNet Scanner Module Configuration Manual* Publication 1771-6.5.118

For MicroLogix/CompactLogic and 1769-ADN information:

- *DeviceNet Module Installation Instructions* Publication 1769-IN001B-EN-P
- *DeviceNet Module User Manual* Publication 1769-UM001B-EN-P

For ControlLogic and 1756-DNB information:

- *DeviceNet Module Installation Instructions* Publication 1756-IN566C-EN-P
- *DeviceNet Module User Manual* Publication DNET-UM004A-EN-P

To install and implement a DeviceNet network:

- *DeviceNet Media Design and Installation Guide* Publication DNET-UM072_-EN-P

IMPORTANT Read the *DeviceNet Media Design and Installation Guide*, Publication DNET-UM072_-EN-P, in its entirety before planning and installing a DeviceNet system. If the network is not installed according to this document, unexpected operation and intermittent failures can occur.

If this manual is not available, please contact either the local Rockwell Automation Distributor or Sales Office and request a copy. Electronic copies may also be obtained via the Internet or from the Allen-Bradley Home Page at "www.ab.com.".

Product Overview

Introduction

This chapter provides a brief overview of the features and functionality of the E3 Overload Relay.

Description

The E3 Overload Relay is a multi-function solid-state microprocessor-based electronic overload relay for the protection of squirrel-cage induction motors rated from 0.4...5,000 A. Four versions are available: the E3 model, EC1, and E3Plus models EC2, EC3, and EC5.

Figure 1 - Front Panel Display (E3 Plus Overload Relay shown)

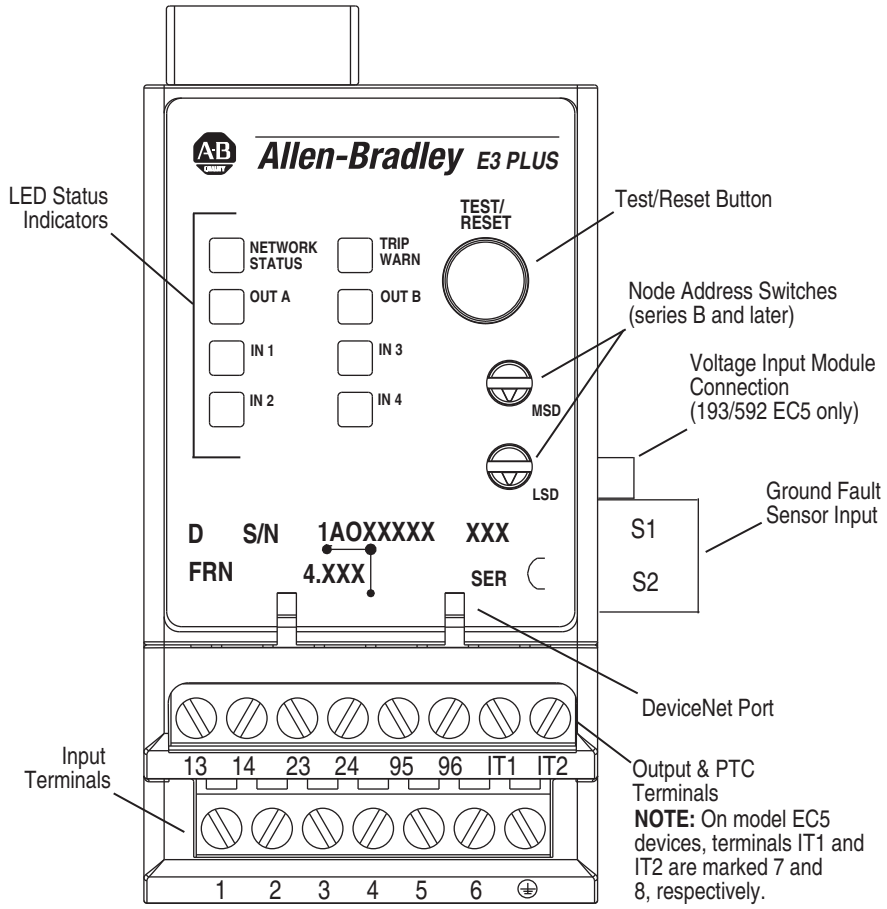

Catalog Number Explanation

The solid-state overload relay purchased has its own catalog number. The catalog number is explained below.

193 - EC1 B B
592

Bulletin Number

Type
EC1 E3
EC2 E3 Plus❶
EC3 E3 Plus❷
EC5 E3 Plus❷

Current Rating (Amps)
P 0.4…2.0
A 1…5
B 3…15
C 5…25
D 9…45
E 18…90
F 28…140
G 42…210
H 60…302
J 84…420
K 125…630
L 172…860

Bulletin 100 Contactor Size
B C09…C23
D C30…C43
E C60…C85
F D95…D180
G D210…D420
H D630…D860
Z Panel Mount, CT fed

Bulletin 500 Contactor Size
T Size 00
C Size 0…2
D Size 3
E Size 4
F Size 5
G Size 6

❶ (0.4…90 A) Provides 1…5 A internal core-balanced ground fault protection

❷ (0.4.…5000 A) Provides 20 mA…5 A external core balanced ground fault protection. External ground fault sensor required (Cat. nos. 193-CBCT-1…4).

Single-/Three-Phase Operation

The overload relay is factory programmed for three-phase operation. The installer can easily be changed to single-phase operation by accessing and changing Single/Three Phase, Parameter 27. Refer to page 34 for typical motor connections.

Protection & Warning Functions

The E3 Overload Relay provides the following protection and warning functions:

Function	Model
• Overload • Phase loss (trip only) • Stall (trip only) • Jam • Underload • Current imbalance • Number of starts (warning only) • Operating hours (warning only)	All Models
• Voltage • Power • Frequency	EC5 Only
• Ground fault	EC2, EC3, & EC5 Only
• Thermistor (PTC) input	EC2 and EC3 Only

Refer to Chapter 3 on page 45 for further explanation of these protection and warning functions.

Parameter Monitoring

The E3 Overload Relay allows the user to monitor information on various parameters over the DeviceNet™ network.

Current-Based Operational Data

Current-Based Operational Data	Unit of Measure
Individual phase currents	Amperes
Average current	Amperes
Average current	% of motor FLC
Percentage of thermal capacity utilized	%
Current imbalance percentage	%
Ground fault current (EC2, EC3, and EC5 only)	Amperes

Refer to Chapter 6 for further information.

Diagnostic Parameters

• Device Status • Trip Status • Warning Status • Time to an overload trip (in seconds)	• Time to reset after an overload trip (in seconds) • History of the past five trips and warnings • Diagnostic data at the time of a trip

Refer to Chapter 6 for further information.

Voltage Parameters

• Voltage range • Phase rotation • Voltage warning status	• Voltage unbalance • Voltage frequency

Refer to Chapter 7 for further information.

Power Parameters

• Power range • Reactive power • Apparent power	• Power factor • Power consumed

Refer to Chapter 8 for further information.

Overload Relay Features

Trip Relay

When the E3 Overload Relay is in the unpowered state, the trip relay contact is open. The trip relay contact closes approximately 2 to 35 seconds after power is applied if no trip condition exists.

Inputs & Outputs

In addition to the trip relay, the E3 Overload Relay provides inputs and outputs as shown below.

Table 1 - Inputs & Outputs

Model	Inputs ❶	Outputs
EC1	2	1
EC2, EC3	4	2
EC5	6	2

❶ Inputs are rated at 24V only. For 120V AC inputs, add the AC Input Interface Module, Cat. No. 193-EIMD.

The status of each input and output can be monitored over the DeviceNet network through Device Status, Parameter 21, or one of the input assemblies. Additionally, the outputs can be controlled over the network using one of the output assemblies. Refer to Appendix B for listings of the available input and output assemblies.

Series B and later E3 Plus Overload Relays offer added flexibility by providing the capability to perform control functions with the inputs and outputs through DeviceLogix™.

Series B or later E3 Overload Relay inputs are independently configurable for trip reset, remote trip, two-speed, and normal operation.

ATTENTION: If the outputs are being commanded via an explicit message, ensure that there is no established I/O connection that is actively controlling the outputs **and** that the explicit message connection has a non-zero expected packet rate (EPR) setting.

ATTENTION: The state of the outputs during a protection fault, DeviceNet communication fault, or a DeviceNet communication idle may be dependent on the following OUT A or OUT B parameters: PrFltState, Pr FltValue, Dn FltState, Dn FltValue, Dn IdlState, and Dn IdlValue. For details, refer to the Output Setup Group section in Chapter 5.

ATTENTION: The E3 Overload Relay's output control firmware latches OUT A and OUT B closed upon receipt of a network close command. The outputs will maintain the commanded closed state until receipt of a network open command. Parameters OutX Pr FltState and OutX Pr FltValue, found in the E3 Overload Relay's output setup group, allows flexibility concerning the operation of the outputs in the event of a trip. **Factory default settings cause the outputs to open upon occurrence of a trip. E3 outputs that were closed prior to a trip will reclose upon trip reset, provided that a network open command is not received first.**

User Interface

Refer to Figure 1 on page 11 for the location of LED status indication, Test/Reset button, and node address switches.

LED Status Indication

The following LED status indicators are provided on the E3 Overload Relay. See Chapter 12 for detailed information on each status.

Network Status — Illuminated in green or red, this indicates the network connection status.

Trip/Warning — Under a warning condition, the LED status flashes a sequence of red and/or amber. Under the trip condition, the LED status flashes a sequence of red. In either condition, the flash pattern followed by a pause identifies the specific trip or warning. The meaning of the flash pattern can be found on the E3 Overload Relay's side label or Table XX on page XX.

OUT A and OUT B — When the output contacts are commanded closed, the LED illuminates amber.

IN 1…IN 4 —When the user-connected device contact is closed, the LED status illuminates in amber.

NOTE: IN 3, IN 4, and OUT B are available only on the E3 Plus Overload Relay.

Test/Reset Button

Test — If Test Enable is activated, the trip relay contact will open if the E3 Overload Relay is in an untripped condition **and** the Test/Reset button is pressed. For devices with firmware revision number (FRN) 2.000 and later, the Test/Reset button must be pressed for a minimum of two seconds to activate the test function.

Reset — If the E3 Overload Relay **(a)** is in a tripped condition, **(b)** the cause of

the trip is no longer present, **and (c)** the test/reset button is pressed, the trip relay contact will close.

ATTENTION: The Test function associated with the Test/Reset button is enabled by default. Activating the Test function while a motor is operating will cause the starting contactor to drop out and stop motor operation.

Node Address Switches

The node address switches, located on the front of the Series B and later E3 Overload Relays, provide a physical means for setting the device node address value. Switch settings greater than 63 allow the node address to be software configured.

DeviceNet Compatibility

The E3 Overload Relay supports the following DeviceNet functionality:

Functionality	Models
• Polled I/O messaging • Change-of-state/cyclic messaging • Explicit messaging • Group 4 off-line node recovery messaging • Full parameter object support • Auto-baud rate identification • Configuration consistency value	All models
• UCMM (Unconnected Message Manager)	Series B and later devices
• DeviceLogix component technology	E3 Plus, Series B and later devices

Flash Memory

Series B and later E3 Overload Relays incorporate flash memory. This facilitates updating of the product firmware as new revisions are released.

IMPORTANT It is not possible to flash upgrade from Series B firmware to Series C firmware.

Installation & Wiring

Introduction

This chapter provides instructions for receiving, unpacking, inspecting, and storing the E3 Overload Relay. Installation and wiring instructions for common applications are also included.

Receiving

It is the responsibility of the user to thoroughly inspect the equipment before accepting the shipment from the freight company. Check the item(s) received against the purchase order. If any items are damaged, it is the responsibility of the user not to accept delivery until the freight agent has noted the damage on the freight bill. Should any concealed damage be found during unpacking, it is again the responsibility of the user to notify the freight agent. The shipping container must be left intact and the freight agent should be requested to make a visual inspection of the equipment.

Unpacking/Inspecting

Remove all packing material from around the E3 Overload Relay. After unpacking, check the item's nameplate catalog number against the purchase order.

Storing

The E3 Overload Relay should remain in its shipping container prior to installation. If the equipment is not to be used for a period of time, it must be stored according to the following instructions in order to maintain warranty coverage:

- Store in a clean, dry location.
- Store within an ambient temperature range of -40 °C...+85 °C (-40 °F...+185 °F).
- Store within a relative humidity range of 0...95%, non-condensing.
- **Do not** store where the device could be exposed to a corrosive atmosphere.
- **Do not** store in a construction area.

General Precautions

In addition to the specific precautions listed throughout this manual, the following general statements must be observed.

ATTENTION: The E3 Overload Relay contains electrostatic discharge (ESD) sensitive parts and assemblies. Status control precautions are required when installing, testing, servicing, or repairing this assembly. Component damage may result if ESD control procedures are not followed. If you are not familiar with static control procedures, refer to Allen-Bradley publication 8000-sb001_-en-p, Guarding Against Electrostatic Damage", or any other applicable ESD protection handbook.

ATTENTION: An incorrectly applied or installed E3 Overload Relay can result in damage to the components or reduction in product life. Wiring or application errors (e.g., incorrectly figuring the FLA setting, supplying incorrect or inadequate DeviceNet supply voltage, connecting an external supply voltage to the input or thermistor terminals, or operating.storing in excessive ambient temperatures) may result in malfunction of the E3 Overload Relay.

ATTENTION: Only personnel familiar with the E3 Overload Relay and associated machinery should plan to install, start up, and maintain the system. Failure to comply may result in personal injury or equipment damage.

ATTENTION: The purpose of this user manual is to serve as a guide for proper installation. The National Electrical Code (NEC) and any other governing regional or local code will overrule this information. Rockwell Automation cannot assume responsibility for the compliance or proper installation of the E3 Overload Relay or associated equipment. A hazard of personal injury and/or equipment damage exists if codes are ignored during installation.

ATTENTION: The earth ground terminal of the E3 Overload Relay shall be connected to a solid earth ground via a low-impedance connection.

Starter Assembly

The following figures and tables illustrate the starter assembly instructions and approximate dimensions.

Installation

The 100-C09...C43 Starter Assembly installation instructions for use with Catalog Numbers 193-EC_ _B and -EC_ _D are shown in Figure 2.

Figure 2 - 100-C09…C43 Starter Assembly Installation

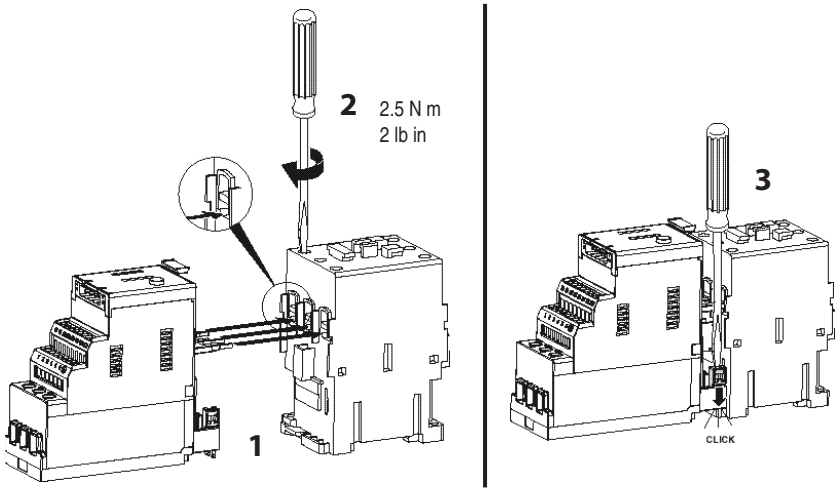

The 100-C60...C85 Starter Assembly installation instructions for use with Catalog Numbers 193-EC_ _E are shown in Figure 3.

Figure 3 - 100-C60…C85 Starter Assembly Installation

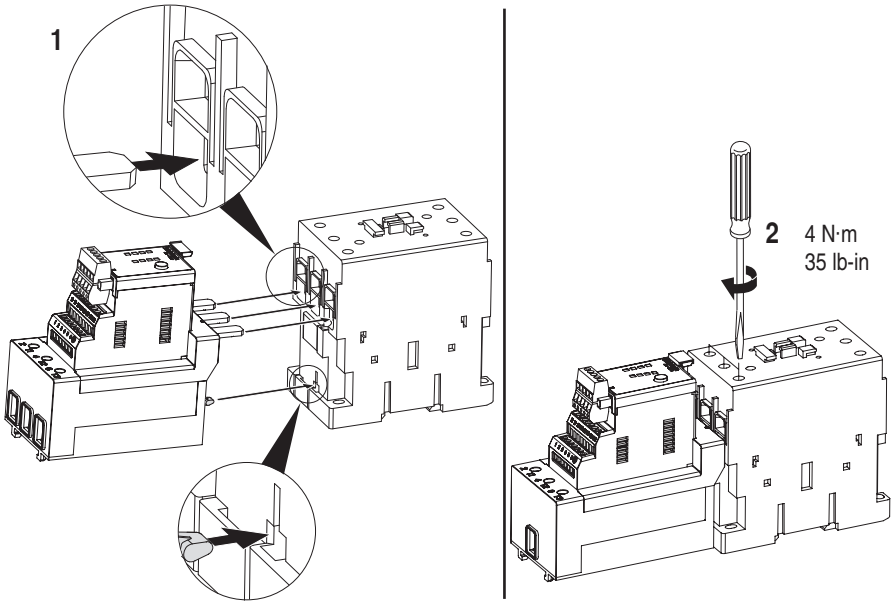

The 100-D95...D860 Starter Assembly installation instructions for use with Catalog Numbers 193-EC_ _F, 193-EC_ _G, and -EC_ _H are shown below.

ATTENTION: The voltage ratings of the E3 Overload Relay's output and trip relays must not be exceeded. If the voltage ratings are exceeded, an interposing relay must be used.

ATTENTION: Connect the internal metal shield to a solid earth ground via a low impedance connection.

IMPORTANT Ground fault protection requires connection of an external core balance current transformer (CBCT).

IMPORTANT For identification of the proper CT ratio to be programmed, refer to the product nameplate.

Figure 4 - 100-D95…D860 Starter Assembly Installation

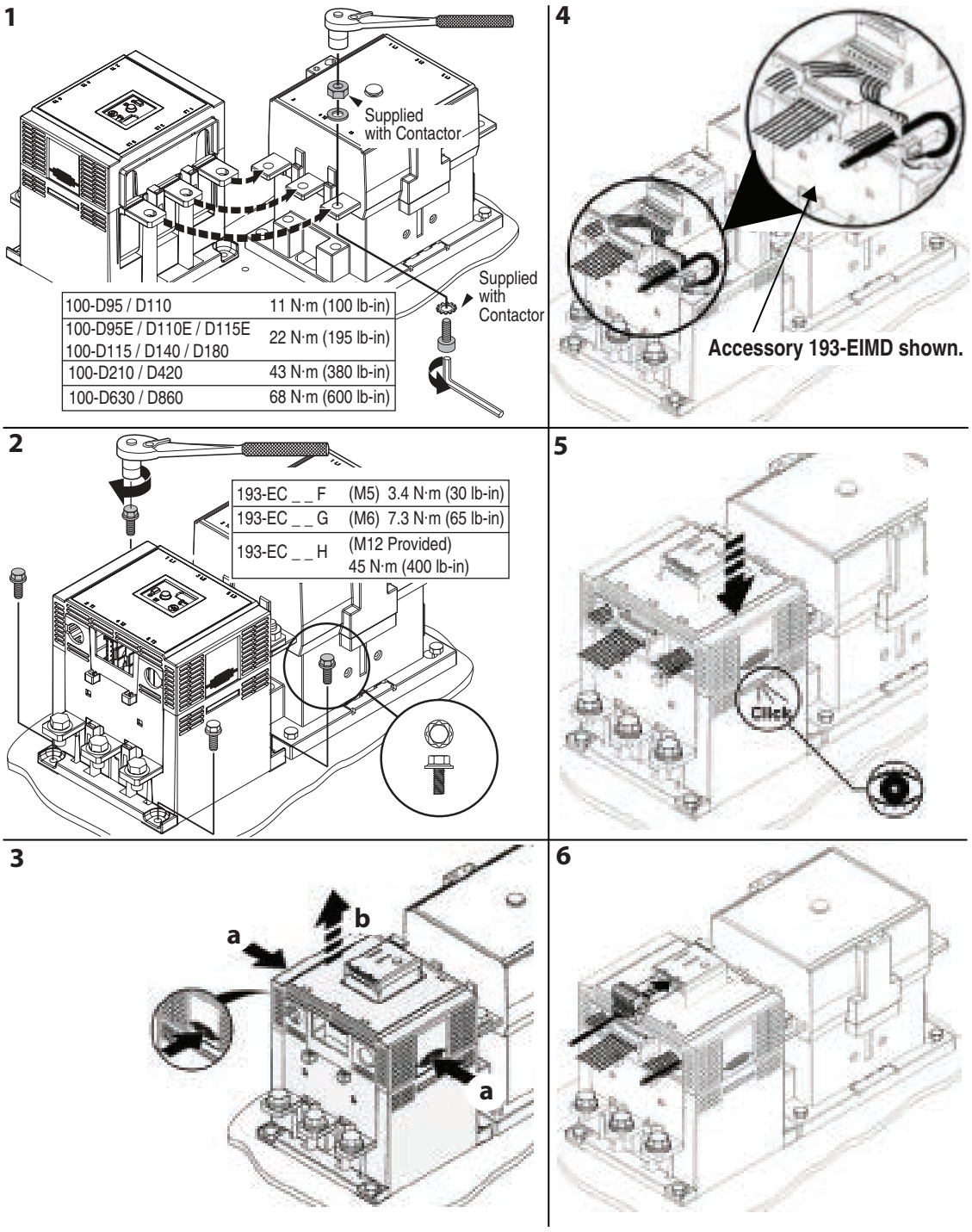

Approximate Dimensions

Approximate dimensions are shown in millimeters (inches). Dimensions are not intended to be used for manufacturing purposes.

Figure 5 - Overload Relay 193-EC_ _ B, D, & E with Contactor 100-C*

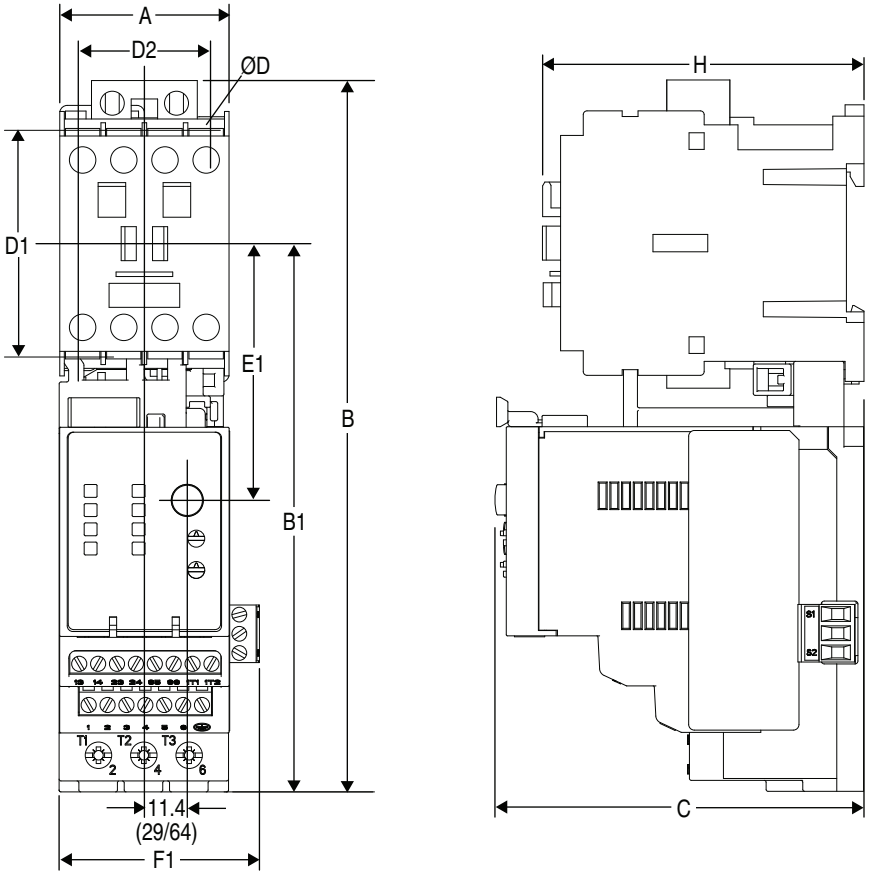

Cat. No.			Height B 193-EIMD									
Overload Relay	**Contactor 100-**	**Width A**	**without**	**with**	**B1**	**Depth C**	**E1**	**F1**	**D1**	**D2**	**H**	**Ø D**
193-EC_ _B	C09, C-12, C16, C23	45 (1-25/32)	188.3 (7-13/32)	207.7 (8-11/64)	145.1 (5-23/32)	107 (4-7/32)	67.9 (2-43/64)	53.2 2-3/32)	60 (2-23/64)	35 (1-3/8)	85.1 (3-23/64)	4.2 (11/64)
193-EC_ _D	C30, C37										104 (4-3/32)	
	C43	54 (2-1/8)						62.2 (2-7/16)		45 (1-25/32)	107 (4-7/32)	
193-EC_ _E	C60, C72, C85	72 (2-53/64)	236.1 (9-19/64)	255.5 (10-1/16)	173.2 (6-13/16)	124.6 (4-29/32)	89.8 (3-17/32)	80.2 (3-9/64)	100 (3-15/16)	55 (2-11/64)	125.5 (4-15/16)	5.5 (7/32)

Figure 6 - Overload Relay 193-E_ _F, G, & H with Contactor 100-D*

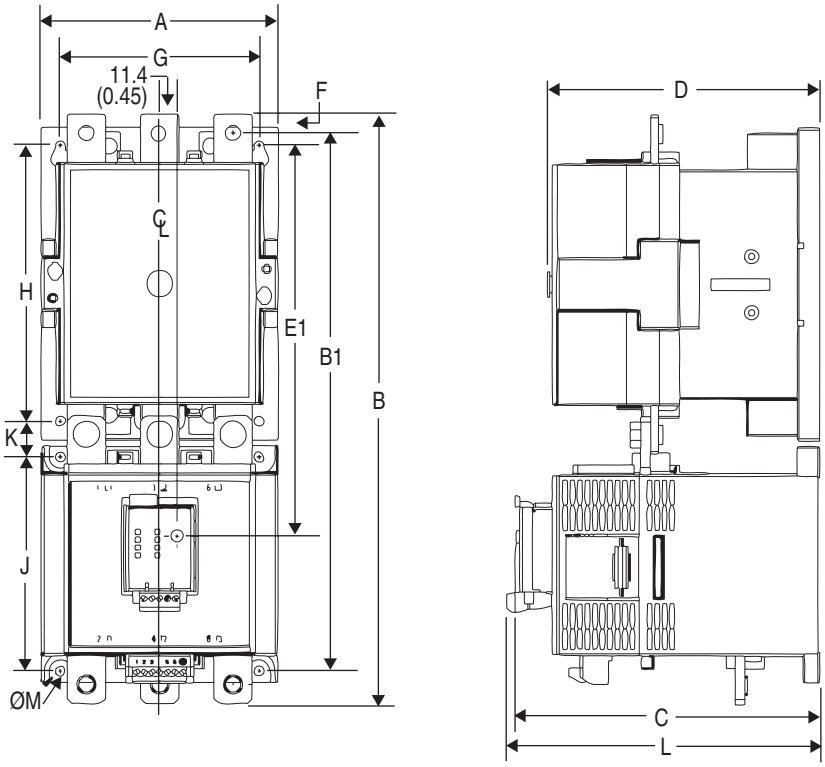

Cat. No.			Height B 193-EIMD												
Overload Relay	**Contactor 100-**	**Width A**	**without**	**with**	**B1**	**Depth C**	**D**	**E1**	**F**	**G**	**H**	**J**	**K**	**L**	**ØM**
193-EC_ _F	D95, D110	120 (4.72)	336.3 (13.24)	418 (16.46)	311.8 (12.27)	175.1 (6.89)	156 (6.14)	216.1 (8.51)	12.5 (0.49)	100 (3.94)	145 (5.71)	135 (5.31)	22.3 (0.88)	180.9 (7.12)	5.6 (0.22)
	D140, D180		339.8 (13.38)		317.8 (12.51)				16 (0.63)						
193-EC_ _G	D210, D250, D300, D420	155 (6.10)	385.8 (15.19)	487.4 (19.19)	360.8 (14.2)	198.9 (7.83)	180 (7.09)	255 (10.04)	21 (0.83)	130 (5.12)	180 (7.09)	140 (5.51)	23.5 (0.93)	204.7 (8.06)	
193-EC_ _H	D630, D860	255 (10.04)	552 (21.73)	915 (36.02)	508 (20.0)	291.7 (11.49)	270.7 (10.66)	373.9 (14.72)	52.5 (2.07)	226 (8.90)	230 (8.90)	108 (4.25)	109 (4.29)	297.5 (11.71)	13 (0.51)

Figure 7 - Overload Relay 592-EC_ _ T, C, & D with NEMA Contactor

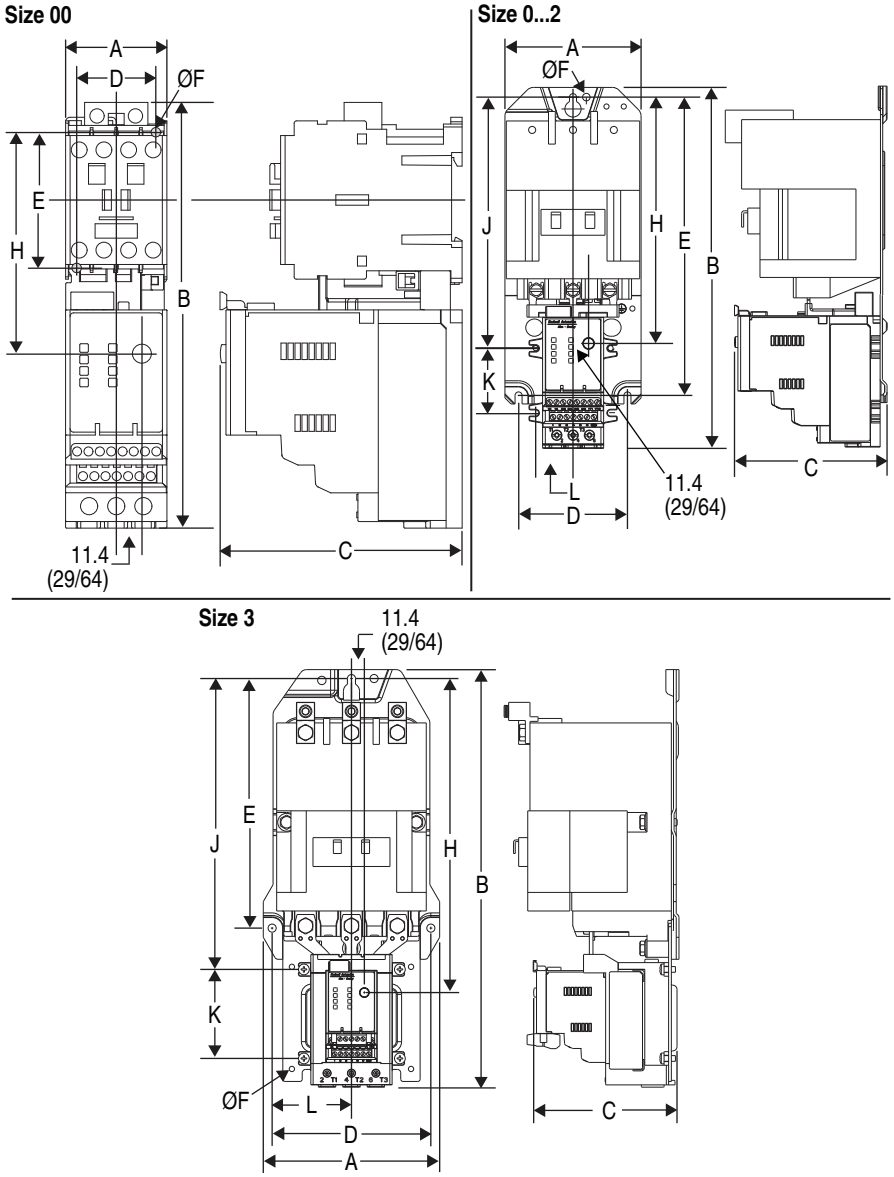

Cat. No. Overload Relay	NEMA Contactor Size	Width A	Height B 193-EIMD without	Height B 193-EIMD with	Depth C	D	E	ØF	H	J	K	L
592-EC_ _T	00	45 (1-25/32)	188.3 (7-13/32)	207.7 (8-11/64)	107 (4-7/32)	35 (1-3/8)	60 (2-23/64)	4.2 (11/64)	97.9 (3-27/32)	—	—	—
592-EC_ _C	0, 1	90.4 (3-9/16)			112.1 (4-13/32)	69.9 (2-3/4)	179.4 (7-1/16)	5.15 ((13.64)	159.4 (7-15/32)	163 (6-7/16)	47.5 (1-7/8)	27.5 (1-5/64)
	2	100 (3-15/16)				80 (3-5/32)	219.3 (8-5/8)	5.54 (7/32)	186 (7-21/64)	189.5 (7-15/32)		
592-EC_ _D	3	155.5 (6-1/8)	236.1 (9-19/64)	255 (10-1/16)	126.3 (4-31/32)	139.9 (5-33/64)	219.9 (8-43/64)	7.1 (9/32)	276.7 (10.9)	256.3 (10-3/32)	78.5 (3-3/32)	42.3 (1-21/32)

Separate Panel Adapter

Approximate Dimensions

Approximate dimensions are shown in millimeters (inches). Dimensions are not intended to be used for manufacturing purposes.

Figure 8 - 193-ECPM1 Panel Adapter for use with Cat. No. 193-EC_ _B

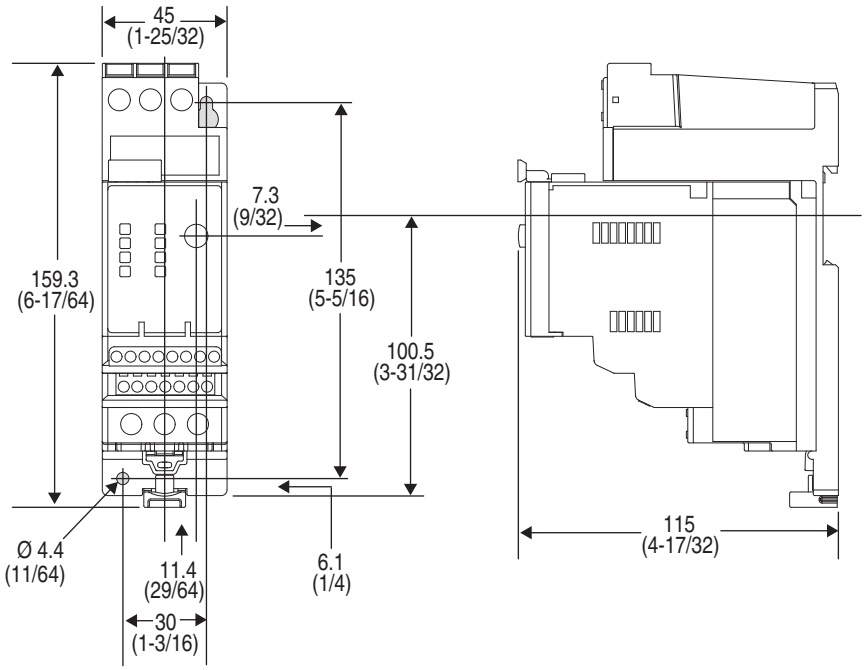

Figure 9 - 193-ECPM2 Panel Adapter for use with Cat. No. 193-EC_ _D & Z

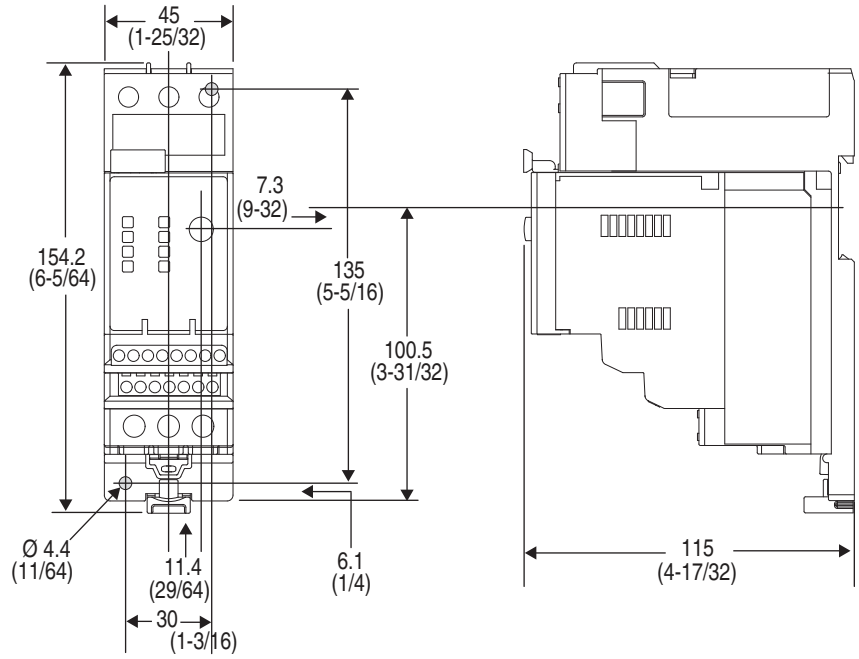

Figure 10 - 193-ECPM3 Panel Adapter for use with Cat. No. 193-EC_ _E

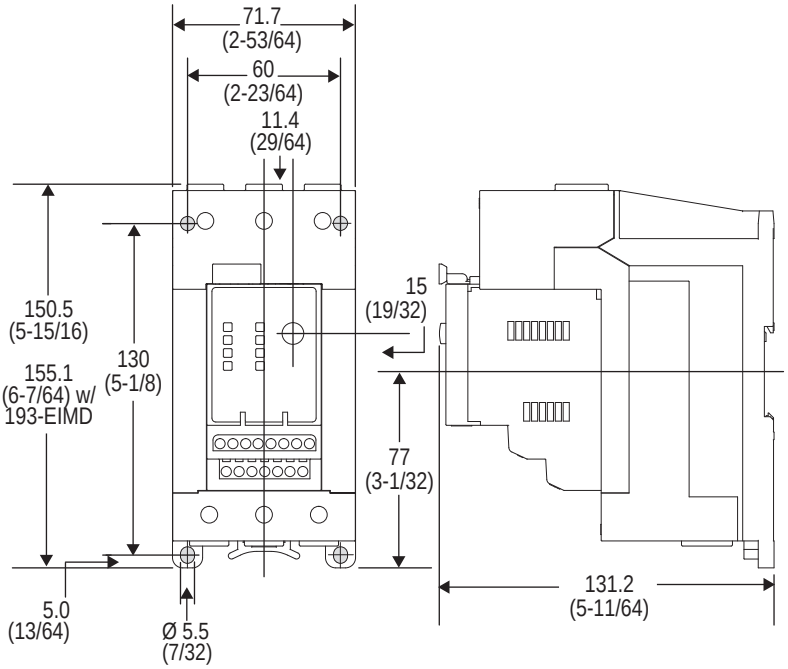

Figure 11 - Separate Panel Adapter for use with Cat. No. 193-EC_ _ F, G, & H

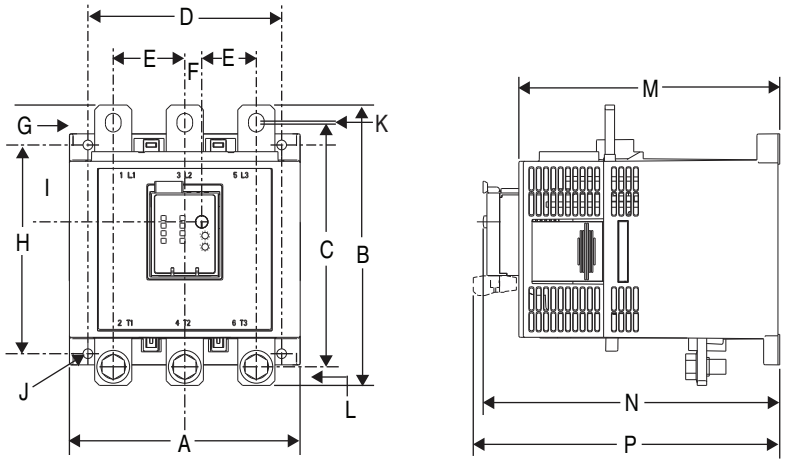

Overload Cat. No.	A	B	C	D	E	F	G	H	I	J	K	L	M	N	P
193-EC_ _ F	4.72 (120.0)	7.19 (182.6)	6.09 (154.6)	3.94 (100)	1.54 (39)	0.45 (11.4)	1.03 (26.3)	5.32 (135)	1.94 (49.4)	0.22 (5.6)	0.24 (6.0)	0.47 (12)	5.95 (151.2)	6.89 (175)	7.12 (180.9)
193-EC_ _ G	6.09 (154.7)	7.40 (188.1)	6.41 (162.8)	5.12 (130)	1.89 (48)	0.45 (11.4)	1.06 (26.8)	5.51 (140.0)	2.03 (51.5)	0.26 (6.5)	0.08 (2.0)	0.49 (12.5)	6.89 (175)	7.83 (198.9)	8.06 (204.7)
193-EC_ _H	10.0 (255.0)	10.28 (261.0)	8.54 (217.0)	8.90 (226)	2.76 (70)	0.45 (11.4)	3.97 (100.8)	4.24 (107.7)	1.37 (134.9)	0.53 (13.5)	—	0.87 (22.0)	10.54 (267.8)	11.49 (291.7)	11.72 (297.5)

Voltage Input Module

The voltage input module, Cat. No. 193-NVEC5VIM, is an add-on accessory for use with the E3 Plus. Approximate dimensions are shown in millimeters (inches). Dimensions are not intended to be used for manufacturing purposes.

Figure 12 - 193-NVEC5VIM Voltage Input Module

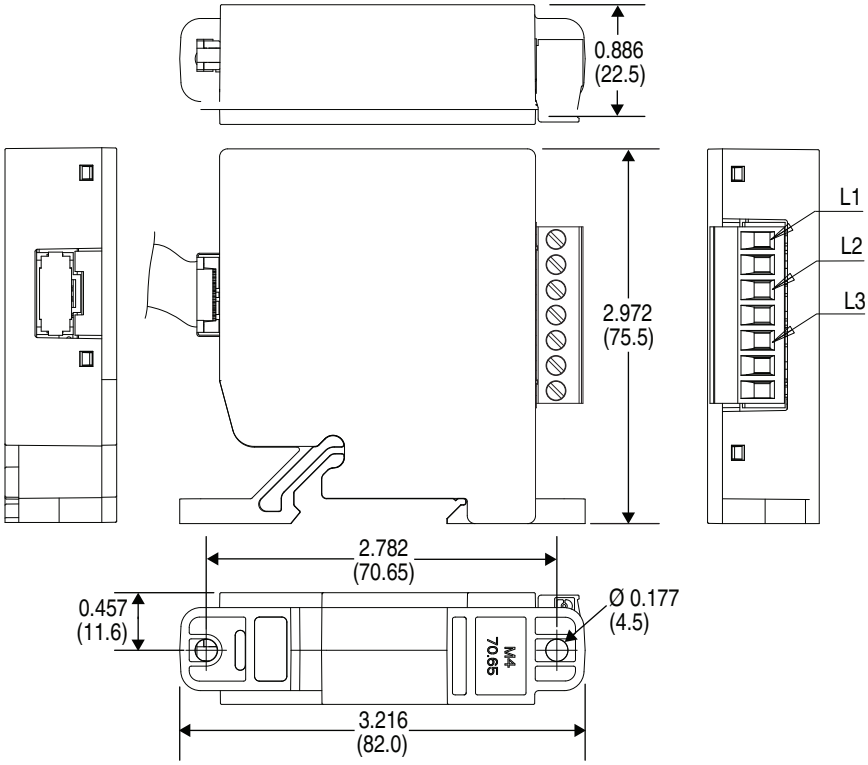

Specifications

Power Terminals

Table 2 - Wire Size & Torque Specification

Wire Type	Conductor Torque	Cat. No. 193-EC_ _B & D, 592-EC_ _T, C	Cat. No. 193-EC_ _E, 592-EC_ _D
Stranded/Solid [AWG]	Single	#14…6 AWG 22 lb-in.	#12…1 AWG 35 lb-in.
	Multiple	#10…6 AWG 30 lb-in.	#6…2 AWG 35 lb-in.
Flexible-Stranded with Ferrule Metric	Single	2.5…16 mm^2 2.5 Nm	4…35 mm^2 4 Nm
	Multiple	6…10 mm^2 3.4 Nm	4…25 mm^2 4 Nm
Coarse-Stranded/Solid Metric	Single	2.5…25 mm^2 2.5 Nm	4…50 mm^2 4 Nm
	Multiple	6…16 mm^2 3.4 Nm	4…35 mm^2 4 Nm

Three-Pole Terminal Blocks

Table 3 - Three-Pole Terminal Blocks

Cat. No.	**100-DTB1890**	(A) 6…1/0 AWG, 16…50 mm^2 (B) 6 AWG…250 MCM, 16…120 mm^2 90…110 lb.-in., 10…12 Nm
	100-DTB420	(2) 4 AWG…600 MCM, 25…240 mm^2 180…220 lb.-in., 20…25 Nm

Terminal Lug Kits

Table 4 - Terminal Lug Kits

Cat. No. 100-DL	**110**	Lug	6…2/0 AWG, 16…70 mm^2 90…110 lb.-in., 10…12 Nm
		Terminal	13/32 in, 10 mm 150 lb.-in., 17 Nm
	180	Lug	6 AWG…250 MCM, 16…120 mm^2 90…110 lb.-in., 10…12 Nm
		Terminal	1/2 in., 13 mm 275 lb.-in., 16 Nm
	420	Lug	2 AWG…350 MCM 375 lb.-in., 42 Nm
		Terminal	11/16 in., 17 mm 140 lb.-in., 16 Nm
	630	Lug	2/0 AWG…500 MCM, 70…240 mm^2 400 lb.-in., 45 N
		Terminal	3/4 in, 19 mm 600 lb.-in., 68 Nm
	860	Lug	2/0 AWG…500 MCM, 70…240 mm^2 400 lb.-in., 45 Nm
		Terminal	3/4 in, 19 mm 600 lb.-in., 68 Nm

Control, DeviceNet, & Voltage Input Module Terminals

Table 5 - Wire Size & Torque Specification

Wire Type	Conductor Torque	All Cat. No. Types
Stranded/Solid [AWG]	Single	24...12 AWG
	Multiple (stranded only)	24...16 AWG 5 lb-in

Wire Type	Conductor Torque	All Cat. No. Types
Flexible-Stranded with Ferrule Metric	Single	0.25…2.5 mm^2
	Multiple	0.5...0.75 mm^2 0.55 Nm
Coarse-Stranded/Solid Metric	Single	0.2...2.5 mm^2
	Multiple	0.2...1.5 mm^2 0.55 Nm

Table 6 - Maximum Wire Length (PTC & input)

Minimum Cross Section	**mm^2**	0.5	0.75	1.5	2.5	4.0
	AWG	20	18	16	14	12
Maximum Length ❶	**meters**	160	250	400	600	1000
	feet	525	825	1300	1950	3200

❶ The use of shielded cable is recommended for the PTC thermistor circuit to assist in obtaining compliance with Electromagnetic Compatibility (EMC) requirements. Shielded cable is recommended for the input circuits, where wire lengths exceed 200 meters (656 feet).

NOTE: For reliable input signal processing, input wiring should be routed in raceways separate from power cabling.

Table 7 - Ground Fault Sensor Terminals (S1 & S2)

Wire Type	Shielded, Twisted Pair
Cross Section	0.2…4.0 mm^2 (#24…12 AWG)
Torque	0.55 N·m (5 lb.-in.)

Terminal Designations

Control Terminals

Table 8 - Control Terminal Designation

Terminal	Reference	Description	
1	IN 1	General Purpose Sinking Input Number:	1
2	IN2		2
3	IN 3		3 ❶❷
4	IN 4		4 ❶❷
5	V+	+24V	
6	V+		
7	IN 5	General Purpose Sinking Input Number:	5 ❷
8	IN 6		6 ❷
⏚	END	Earth Ground ❸	
13/14	OUT A	Output A	
23/24	OUT B	Output B ❶❷	
95/96	Trip Relay	Trip Relay	
IT1/IT2	PTC	Thermistor (PTC) Input ❶❹	
S1/S2	—	External Ground Fault Sensor Input ❷❺	

❶ Features are available only with the E3 Plus Overload Relay (Cat. No. 193/592-EC2 and 193/592-EC3).
❷ Available only on Cat. Nos. 193/592-EC5_ _.
❸ An earth ground connection to this terminal will assist in obtaining compliance with EMC requirements.
❹ The use of shielded cable is recommended for the positive PTC thermistor circuit to assist in obtaining compliance with EMC requirements.
❺ Available only on Cat. No. 193/592-EC3_ _ and 193/592-EC4_ _.

DeviceNet Terminals

Table 9 - DeviceNet Terminal Designation

Terminal	Signal	Function	Color
1	V-	Common	Black
2	CAN_L	Signal Low	Blue
3	Drain	Shield	Non-Insulated
4	CAN_H	Signal High	White
5	V+	Po9wer Supply	Red

Grounding

The following grounding recommendations are provided to ensure EMC requirements during installation.

- The earth ground terminal of the E3 Overload Relay shall be connected to a solid earth ground via a low-impedance connection.
- Installations employing an external ground fault sensor shall ground the cable shield at the sensor with no connection made at the E3 Plus Overload Relay.
- The PTC thermistor cable shield shall be grounded at the E3 Plus Overload Relay with no connection made at the opposite end.

Short-Circuit Ratings

The E3 Overload Relay is suitable for use on circuits capable of delivering not more than the RMS symmetrical amperes listed in the following tables.

Short-Circuit Ratings

Table 10 - UL

Cat. No.		Maximum	
193-EC_ _	592-EC_ _	Available Fault Current [A]	Voltage [V]
B	T	5,000	600
D	C		
E	D	10,000	
F			
G		18,000	
H		42,000	
Z		5,000	

Table 11 - IEC

Cat. No.		Prospective Current I_r [A]	Conditional Short-Circuit Current I_q [A]	Maximum Voltage [V]
193-EC_ _	592-EC_ _			
B	T	1,000	100,000	690
D	C	3,000		
E	D	5,000		

High-Fault Short-Circuit Ratings

Table 12 - Per UL 508 & CSA 22.2, No. 14 with Bulletin 100-C & 100-D Contactors

Cat. No. 193-EC1, -EC2, -EC3, -EC4, -EC5	Contactor 100-	Maximum			
		Starter FLC [A]	Available Fault Current [A]	Voltage [V]	Class J or CC Fuse [A]
_B	C09	9	100,000	600	20
	C12	12			20
	C16	16			30
	C23	23			30
_D	C30	30	100,000	600	50
	C37	37			50
	C43	43			70
_E	C60	60	100,000	600	80
	C72	72			100
	C85	85			150
FF, ZZ	D95	95	100,000	600	200
	D110	110			200
	D140	140			250
GF, ZZ	D180	180	100,000	600	300
GG, ZZ	D210	210	100,000	600	400
	D250	250			400
	D300	300			500
HG, ZZ	D210	210	100,000	600	400
	D250	250			400
	D300	300			500
JG, ZZ	D300	300	100,000	600	500
	D420	420			600

Table 13 - Per UL 508 & CSA 22.2, No. 14 with NEMA Contactors

Cat. No. 592-EC1, -EC2, -EC3, -EC5	Contactor Size	Maximum Available Fault Current [A]	Voltage [V]	UL Fuse [A] R	UL Fuse [A] J	Circuit Breaker/ Limiter
_T	00	100,000	600	—	20	—
_C	0	100,000	240	30	30	FDB 3025/ LFB3070R
			480	30	30	FDB 3025/ LFB3070R
			600	30	30	—
	1	100,000	240	60	100	FDB 3050/ LFB3035R
			480	30	50	FDB 3050/ LFB3035R
			600	30	50	—
	2	100,000	240	100	200	FDB 3100/ LFB3150R
			480	60	100	—
			600	60	100	—
_D	3	100,000	240	200	350	FDB 3150/ LFB3150R
			480	100	200	FDB 3125/ LFB3150R
			600	100	200	FDB 3100/ LFB3150R

Fuse Coordination

The following tables list Type I and Type II Fuse Coordination when used in conjunction with Bulletin 100-C and 100-D Contactors.

ATTENTION: Select the motor branch circuit protection that complies with the NEC and any other governing regional or local codes.

Table 14 - IEC per EN60947-4-1

Cat. No. 193-EC1, EC2, EC3, EC4, EC5	Contactor 100-	Max. Starter FLC [A]	Short-Circuit Current		Max. Voltage [V]	Class J Fuse [A]	
			Prospective I_r [A]	Conditional I_q [A]		with Type I	with Type II
_B	C09	9	1,000	100,000	600	20	15
	C12	12				20	20
	C16	16				30	30
	C23	23				40	40
_D	C30	30	3,000	100,000	600	50	50
	C37	37				50	50
	C43	43				70	70
_E	C60	60	3,000	100,000	600	80	80
	C72	72				100	100
	C85	85	5,000			150	150
FF, ZZ	D95	95	10,000	100,000	600	200	200
	D110	110				200	200
	D140	140				250	250
GF, ZZ	D180	180	10,000	100,000	600	300	300
GG, ZZ	D210	210	10,000	100,000	600	400	400
	D250	250				400	400
	D300	300				500	500
HG, ZZ	D210	210	10,000	100,000	600	400	400
	D250	250				400	400
	D300	300				500	500
JG, ZZ	D300	300	10,000	100,000	600	500	500
	D420	420				600	600

Table 15 - NEMA Contactors

Cat. No. 592-EC	Contactor Size	Max. Starter FLC [A]	Short-Circuit Current		Max. Voltage [V]	Class J Fuse [A]	
			Prospective I_r [A]	Conditional I_q [A]		with Type I	with Type II
_T	00	9	1,000	100,000	600	20	20
_C	0, 1	18, 27	3,000			30	30
	2	45				60	60
_D	3	90	5,000			200	200

Typical Motor Connections

Three-Phase Direct On-Line (DOL) & Single-Phase Full Voltage

ATTENTION: When working on energized circuits, **DO NOT** rely on voltage and current information provided by the E3 and E3 Plus Overload Relay for personal safety. Always use a portable voltage or current measurement device to measure the signal locally.

IMPORTANT Single/Three Ph, Parameter 27, should be set to single-phase.

IMPORTANT Traditional single-phase wiring connecting T2 to L3 will result in a vector imbalance of current flowing through the E3 Plus Overload Relay. This will result in inaccurate ground fault reporting and protection.

The following wiring diagram illustrates the E3 Overload Relay typical motor connections in a three-phase DOL and Single-Phase Full Voltage applications.

Figure 13 - Wiring Diagram, Three-Phase DOL & Single-Phase Full Voltage

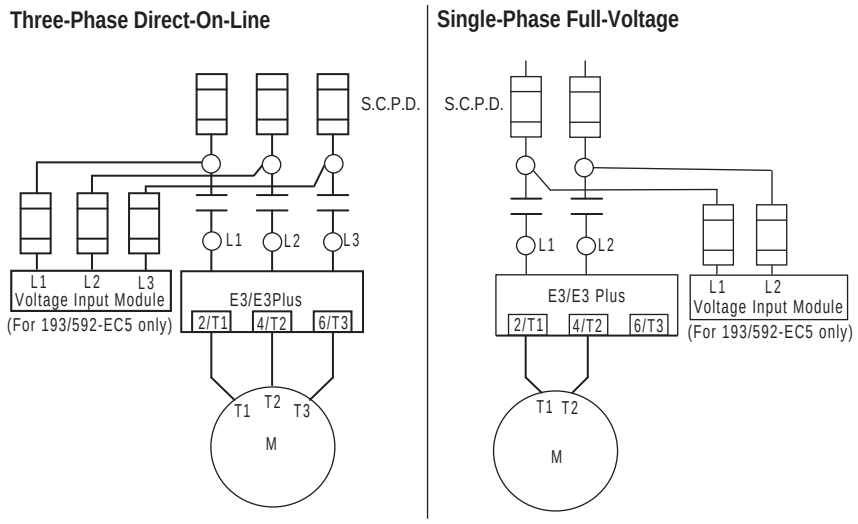

External Line Current Transformer Application

193-EC_ZZ E3 and E3 Plus Overload Relays are designed for use with separately mounted, customer-supplied, line current transformers (CTs) as required in higher-current applications. The FLA setting range is 9...5000 A for these units with a legal setting range per current transformer. CT Ratio, Parameter 78, is provided for setting the current transformer ratio to be installed.

Specifications

The 193-EC_ZZ Overload Relays are intended for use with CTs having a secondary current rating of 5 A. The installer shall (1) provide one CT for each motor phase and shall (2) connect the CT's secondary leads to the appropriate E3

Overload Relay power terminals as shown in Figure 14 on page 36. The CTs shall have an appropriate ratio rating as detailed in Table 18.

Additionally, the CT shall be selected to be capable of providing the required VA to the secondary load, which includes the E3 Overload Relay burden of 0.1 VA at the rated secondary current and the wiring burden.

Finally, the CT shall (1) be rated for Protective Relaying to accommodate the high inrush currents associated with motor startup and shall (2) have an accuracy of ≤±2% over its normal operating range. Typical CT ratings include:

- ANSI USA
- CSA (Canada)
- IEC (Europe)
- Class C5 BO.1
- Class 10L5
- 5 VA Class SP10

ATTENTION: The improper selection of a current transformer can result in the E3 Overload Relay reporting inaccurate motor operational data and possible motor damage. The selected current transformer must be rated for protective relaying applications.

Installation Requirements

- The 193-EC_ZZ Overload Relays are designed to be installed in193-ECPM2 Panel Mount Adapters and connected to separately mounted current transformers.
- For 193-ECPM2 Panel Mount Adapter assembly, refer to the instructions included with the panel mount adapter.

ATTENTION: Placing the E3 Overload Relay closer than the recommended distance, six times the cable diameter (including insulation), may compromise its current reporting and protection capabilities.

- The E3 Overload Relay must be mounted a distance equal to or greater than six times the cable diameter (including insulation) from the nearest current-carrying conductor or current transformer.
- For applications employing multiple conductors per phase, the diameter of each cable should be added and multiplied by six to determine the proper placement distance for the E3 Overload Relay.

Figure 14 - Overload Relay Mounting Placement

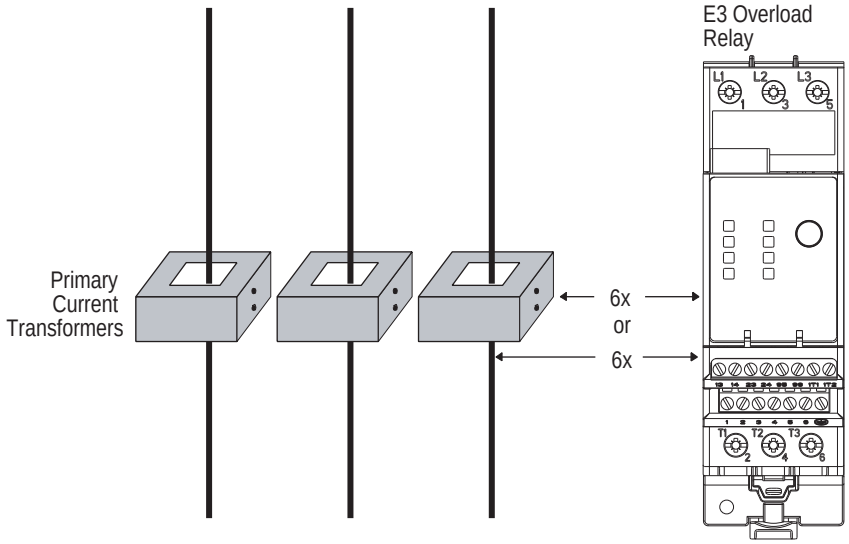

Figure 15 - External CT Connection Diagrams

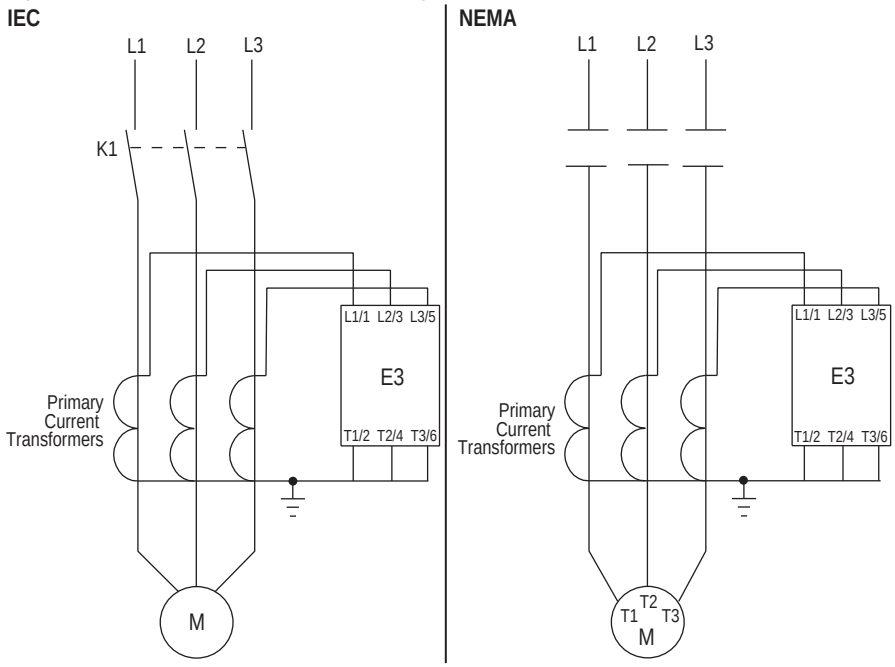

External Potential Transformer (PT) Connection

The 193/592-EC5_ _ E3 Plus Overload Relay can be used with external step-down PTs. The PT ratio is programmed into the E3 Plus Overload Relay by entering the primary winding rating into PT Pri, Parameter 289, and the secondary winding rating into PT Sec, Parameter 290. The voltage mode is also programmed into the E3 Plus Overload Relay by selecting the appropriate mode in Volt Mode, Parameter 156. The E3 Overload Relay Plus will support Wye, Delta, and Open Delta voltage modes with potential transformers.

Table 16 - Wiring Diagrams, External PT Connection

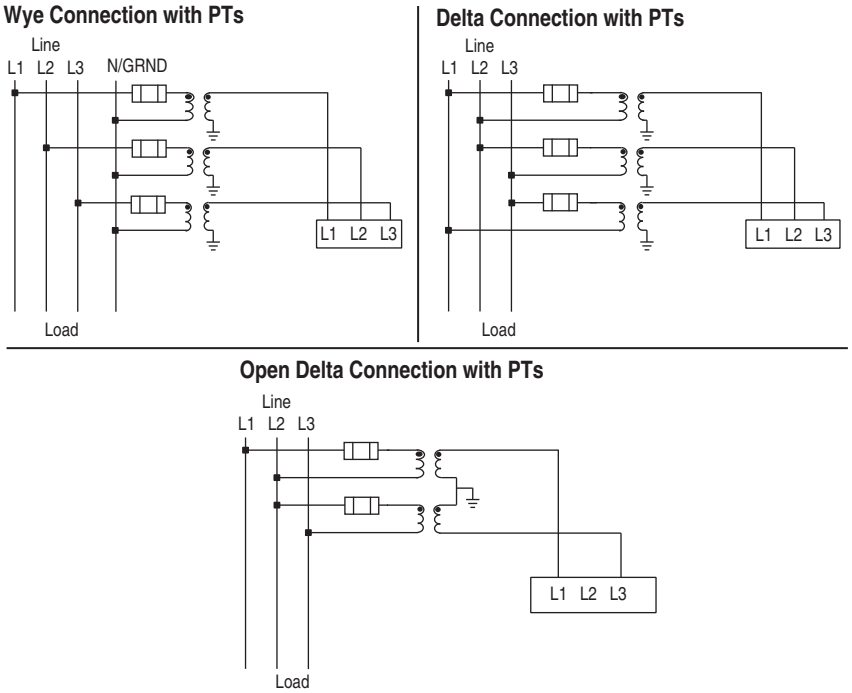

Core Balanced Ground Fault Sensor Application

The 193-EC3_ _ E3 Plus Overload Relays are intended to provide ground fault protection when used with the external 193-CBCT_ Core Balanced Ground Fault Sensor. The ground fault sensor mounts separately from the E3 Plus Overload Relay and must be placed within three meters of the E3 Plus Overload Relay. The customer-supplied power cable for wiring the ground fault sensor to the E3 Plus Overload Relay must meet the specifications outlined in Table 7 on page 28.

Power Cable Installation Requirements

- All power cables (including the neutral when used) must pass through the sensor window. The equipment ground conductor (the conductor used to carry the non-current-carrying metal parts of equipment, as defined by Article 100 of the NEC) must **not** pass through the sensor window.
- The power cables through the sensor window should be straight, tightly bundled, centered in the window, and perpendicular to the sensor for a length equal to or greater than six times the cable diameter (including insulation) from the sensor.
- All other conductors with available fault currents in excess of 1,000 A should be placed a distance equal to or greater than six times the cable diameter (including insulation) from the sensor.
- The power cables of the branch circuit to be protected by the E3 Plus Overload Relay **must not** be grounded on the load side of the ground fault sensor.

- If the power cables are enclosed in a conducting jacket, the jacket must be grounded on the line side of the sensor. The jacket **must not** pass through the sensor window, but must be cut at the window and joined with a conductor that passes outside the sensor window.
- The power system may be solidly grounded or grounded through an impedance at its source as long as the impedance allows a magnitude of current to flow that is within the 20 mA...5 A operational range of the E3 Plus Overload Relay.

Figure 16 - Core Balanced Ground Fault Sensor Mounting Placement

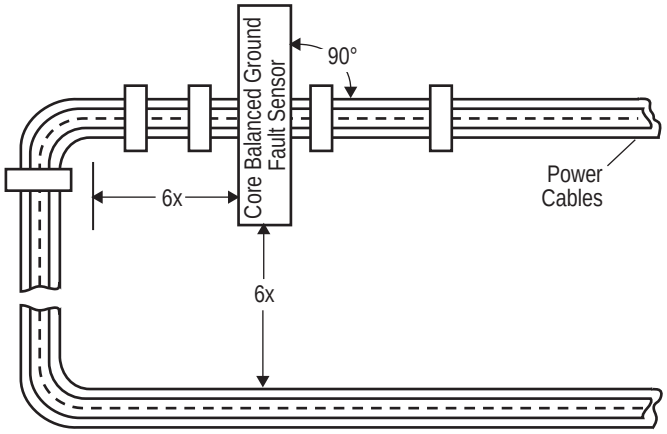

Figure 17 - Power Cable Configuration — Two Cables per Phase

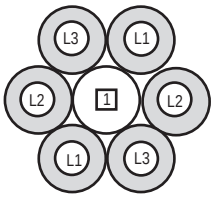

1 The spacer is a short piece of cable, approximately ten times the cable diameter in length, without connections to any terminal.

Figure 18 - Ground Fault Sensor Wiring

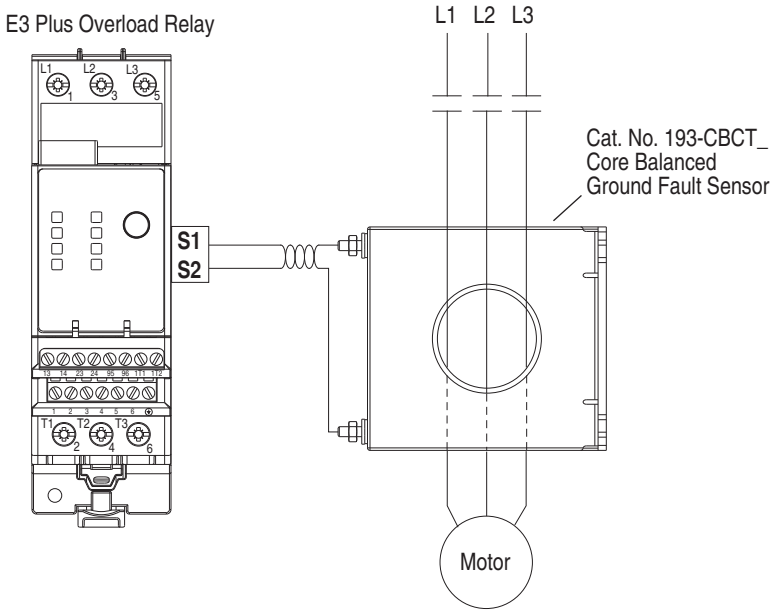

Control Wire Requirements

IMPORTANT The shield of the twisted pair cable **must** be connected to earth ground at the ground fault sensor with **no connection** made at the E3 Plus Overload Relay.

- The maximum length of the shielded cable is 100 feet (30.48 meters).
- All control terminals are for copper wire only in sizes #12...24 AWG.
- Ring lug termination is required for the ground sensor terminals of 193-CBCT2 and larger.
- The sensor fastener torque is 26...30 lb-in.
- The 193-CBCT1 wires should be twisted before termination by applying one twist per inch (per 25.4 millimeters).

Table 17 - Control Wire Specifications

Cat. No. 193-	Max. Current [A]	Hz	Turns Ratio	Sensor Window I.D.	Max. Recommended Cable Size @ 600V	Cat. No. 100-C09 IEC Contactor	NEMA Contactor Size
CBCT1	45	50/60	1000:1	19.1 mm (.75 in.)	#8 AWG (10 mm^2) ❶	…-C37	00…2
CBCT2 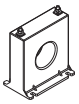	90				#2 AWG (350 mm^2) ❶	…-C85	00…3
CBCT3 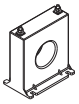	180				#250 MCM (120 mm^2) ❶	…-D180	00…4
CBCT4 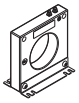	420				$350 MCM (185 mm^2) ❷	…-D240	00…5

❶ For a three-phase system with one cable per phase.
❷ For a three-phase system with two cables per phase.

Approximate Dimensions

Approximate dimensions are shown in millimeters (inches). Dimensions are not intended to be used for manufacturing purposes.

Figure 19 - 193-CBCT1

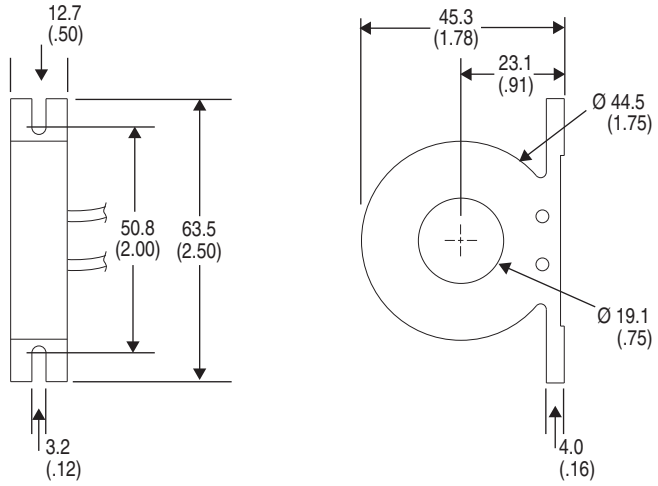

Figure 20 - 193-CBCT2 & 193-CBCT3

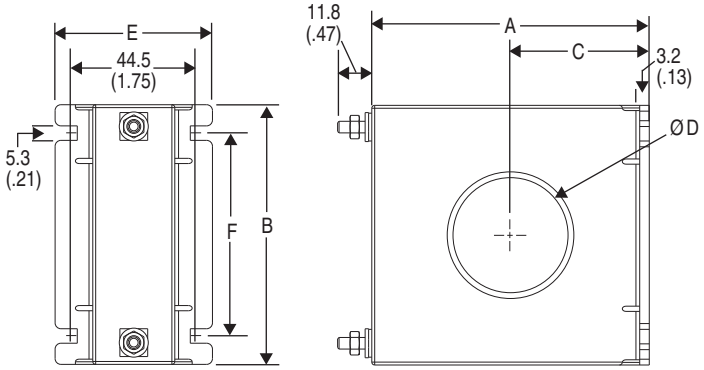

Cat. No.	A	B	C	ØD	E	F
193-CBCT2	96 (3.78)	89.6 (3.53)	48.3 (1.90)	39.6 (1.56)	54.6 (2.15)	69.9 (2.75)
193-CBCT3	122.4 (4.82)	115.9 (4.56)	59.7 (2.35)	63.5 (2.50)	54.1 (2.13)	98.0 (3.78)

Figure 21 - 193-CBCT4

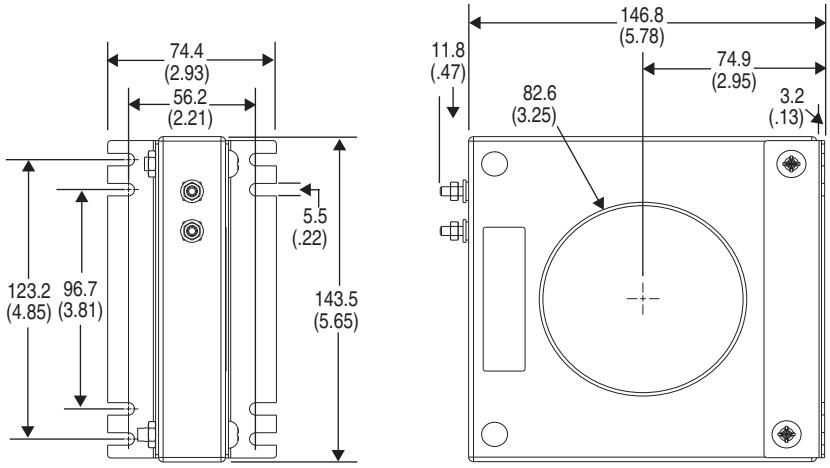

Typical Control Circuit

Wiring Diagrams

ATTENTION: Do not exceed the ratings of the E3 Overload Relay's output and trip relay. If the coil current or voltage of the contactor exceeds the overload relay's ratings, an interposing relay must be used.

ATTENTION: When the power is applied to the E3 Overload Relay, DeviceNet terminals V+ and V-, the N.O. trip relay contact across terminals 95 and 96 will close after approximately 2.35 seconds if no trip condition exists.

ATTENTION: Additional control circuit protection may be required. Refer to the applicable electrical codes.

ATTENTION: Do not apply external voltage to 1T1, 1T2, or the input terminals IN 1…4. This may cause equipment damage.

Full-Voltage Non-Reversing Starter (with Network Control)

Figure 22 - NEMA Nomenclature

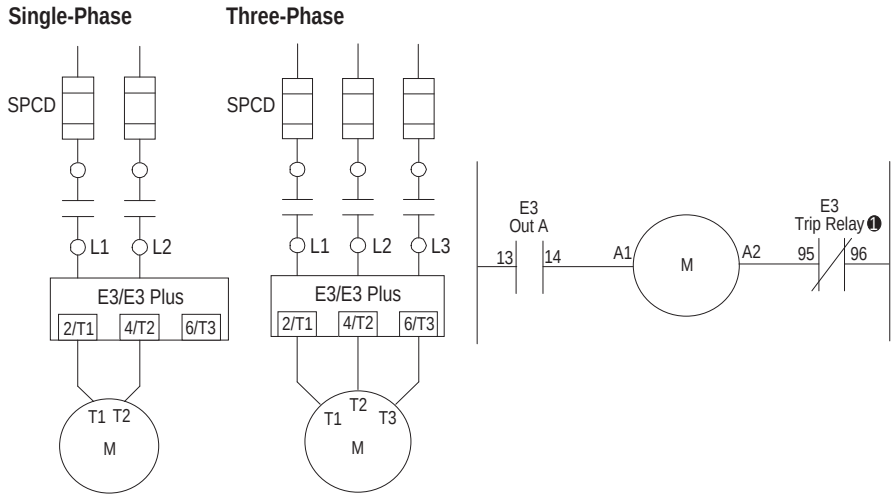

❶ Contact shown with supply voltage applied.

Figure 23 - CENELEC Nomenclature

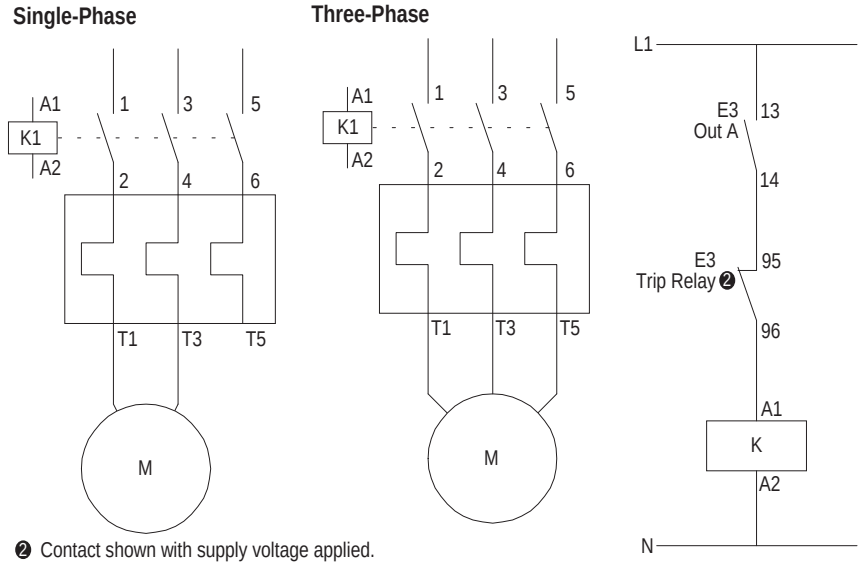

Full-Voltage Reversing Starter (with Network Control)

Figure 24 - NEMA Nomenclature

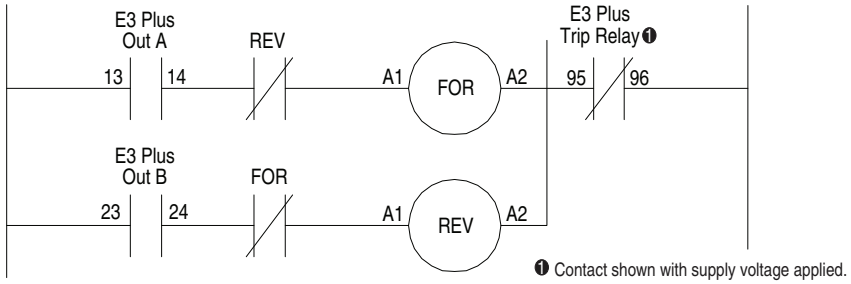

Figure 25 - CENELEC Nomenclature

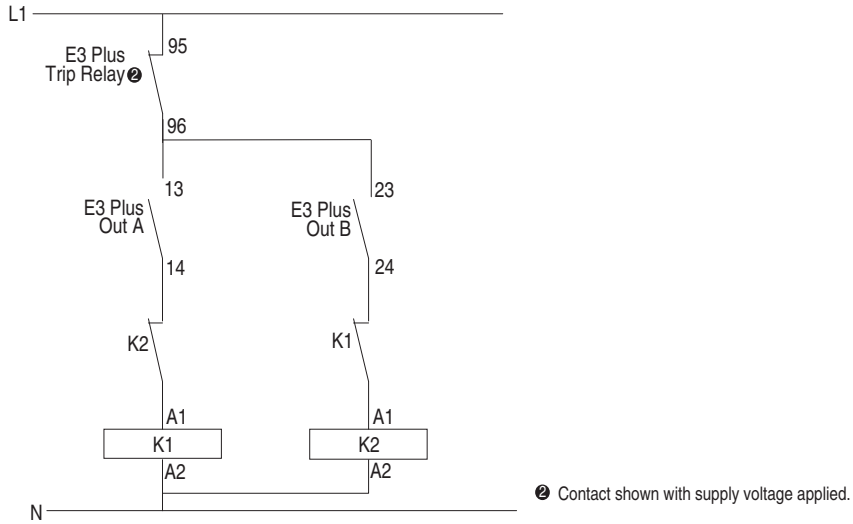

Figure 26 - IEC Reversing Starter Application Schematic

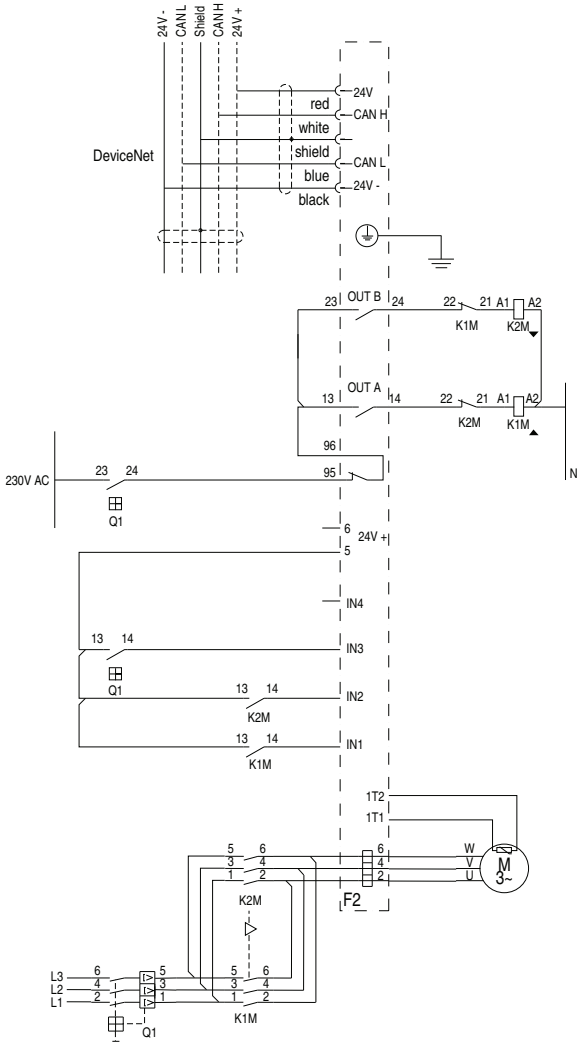

Two-Speed Non-Reversing (with Network Control)

The following figures show wiring diagrams of two-speed non-reversing starters with Series B and later E3 Plus Overload Relays.

Figure 27 - NEMA Nomenclature

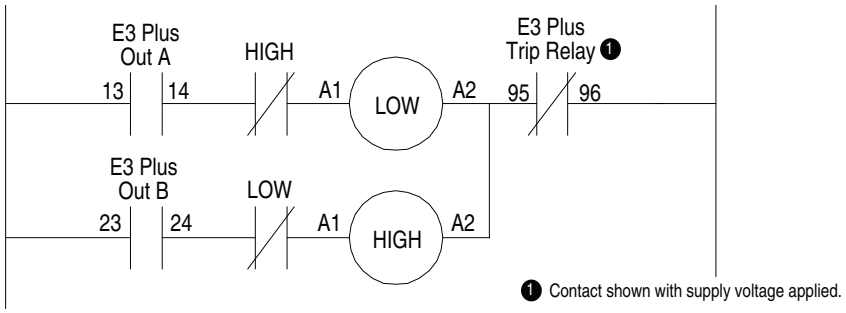

Figure 28 - CENELEC Nomenclature

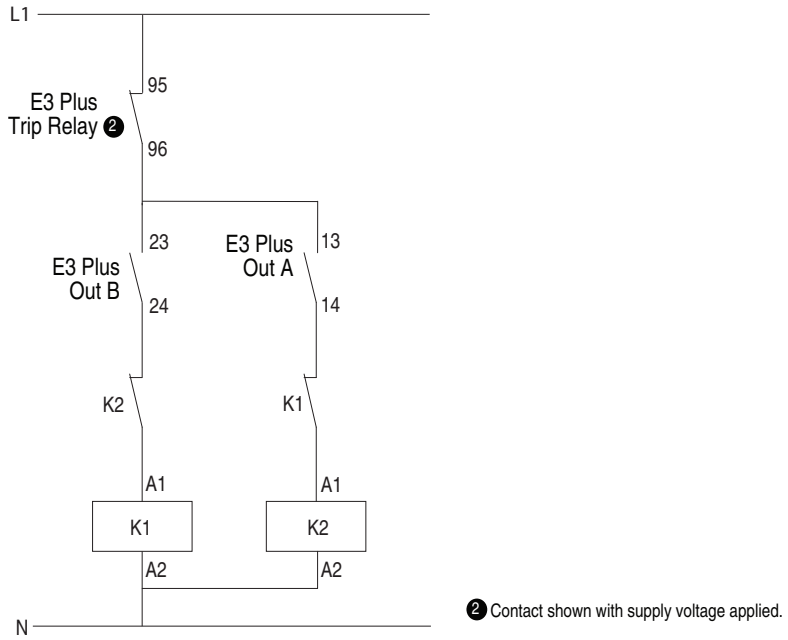

External/Remote Reset (FRN 3.001 & Later)

To reset a trip from an external/remote location, configure one of the E3 Overload Relay's inputs for trip reset operation using one of Parameters 83...86. Wire the input as shown below.

Figure 29 - Reset Wiring

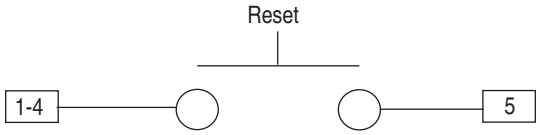

IMPORTANT	Reset operation is edge sensitive and trip free. That is, holding the push button down (maintaining the reset contact in a closed position) will not prevent the E3 Overload Relay from tripping.

Protective Trip & Warning Functions

Introduction

The purpose of this chapter is to provide detailed information regarding the protective trip and warning functions of the E3 Overload Relay. In this chapter, you will find considerable mention given to programming parameters as they relate to these functions. For complete descriptions of the programming parameters, refer to **Chapter 5—Programmable Parameters**.

Trip Enable

Trip Enable, Parameter 24, allows the installer to enable or disable the desired protective functions separately. The overload, phase loss, and communication fault trip functions are enabled from the factory.

IMPORTANT The E3 Overload Relay requires overload trip protection to be enabled at all times. The E3 Plus Overload Relay requires either overload **or** PTC trip protection to be enabled at all times.

ATTENTION: To avoid unexpected behavior of the outputs, the Trip Enable settings should **not** be altered during the machine operation. Doing so may result in an unintended actuation of controlled industrial equipment with potential for machine damage or serious injury to personnel.

Warning Enable

Warning Enable, Parameter 25, allows the installer to enable or disable the desired warning functions separately. All warning functions are disabled from the factory.

Overload Protection

The E3 Overload Relay provides overload protection through true RMS current measurement of the individual phase currents of the connected motor. Based on the maximum current measured and the programmed FLA Setting and Trip Class, a thermal model that simulates the actual heating of the motor is calculated. The percent thermal capacity utilized, Parameter 9, reports this calculated value and can be read via the DeviceNet network.

Overload Trip

The E3 Overload Relay will trip with an overload indication if:

- no trip currently exists**,**
- overload protection is enabled, **and**

- % Therm Utilized reaches 100%.

If the E3 Overload Relay trips on an overload, the following will occur:

- the TRIP/WARN LED will flash a red two-blink pattern,
- Bit 1 in Trip Status, Parameter 14, will go to "1",
- Bit 0 in Device Status, Parameter 21, will go to "1",
- the Trip Relay contact will open, **and**
- the outputs will be placed in their Protection Fault state (if so programmed).

IMPORTANT The Protection Fault State of OUT A and OUT B is defined by:

- OUTA Pr FltState, Parameter 65
- OUTA Or FltValue, Parameter 66
- OUTB Pr FltState, Parameter 71
- OUTB Pr FltValue, Parameter 72

FLA Setting

The FLA Setting, Parameter 28, is provided for the installer to enter the motor's full-load current rating. The 2-SpdFLA Set, Parameter 88, is provided in series B and later E3 Plus Overload Relay units for programming the high-speed FLA values in two-speed motor applications. The FLA Setting ranges and default values for the various E3 Overload Relays can be found in **Chapter 5—Programmable Parameters**. Below are setting guidelines regarding service factor, maximum continuous rated (MCR) motors, and wye-delta (star-delta) motors.

USA & Canada Guidelines

- **Motor Service Factor ≥ 1.15:** For motors with a service factor rating of 1.15 or greater, program the FLA setting to the printed nameplate's full-load current rating.
- **Motor Service Factor < 1.15:** For motors with a service factor rating less than 1.15, program the FLA setting to 90% of the printed nameplate's full-load current rating.
- **Wye-Delta (Y-Δ) Applications:** Follow the application's service factor instructions, except divide the printed nameplate's full-load current rating by 1.73.

Outside USA & Canada Guidelines

- **Maximum Continuous Rated (MCR) Motors:** Program the FLA setting to the printed nameplate's full-load current rating.
- **Star-Delta (Y-Δ) Applications:** Follow the MCR instructions, except divide the printed nameplate's full-load current rating by 1.73.

CT Ratio

Devices with the FLA setting range of 9...5000 A (Cat. No. 193-EC_ZZ) are intended for use with primary current transformers. CT Ratio, Parameter 78, allows the installer to identify the turns ratio of the transformers(s) in use. Each CT Ratio selection has a corresponding valid FLA setting range, as described in the following table.

Table 18 - CT Ratio/FLA Setting Range Correspondence

CT Ratio	FLA Setting Range (A)	CT Ratio	FLA Setting Range (A)	CT Ratio	FLA Setting Range (A)
50:5	9…45	300:5	60…302	1200:5	240…1215
100:5	18…90	500:5	84…420	2500:5	450…2250
150:5	28…140	600:5	125…630	5000:5	1000…5000
200:5	42…210	800:5	172…860	—	

ATTENTION: Improper configuration of the CT Ratio parameter can result in the E3 Overload Relay reporting inaccurate motor operational data and possible motor damage.

IMPORTANT Catalog Numbers 193-EC_ _F, G, and H are assemblies that contain primary current transformers. The device nameplate identifies the propter CT ratio to be programmed and the associated legal FLA setting range.

IMPORTANT The E3 Overload Relay's TRIP/WARN LED status indicator will flash an amber configuration warning (13-flash sequence) when the FLA setting is outside of the legal range of the selected CT Ratio setting (e.g., CT Ratio set at 300:5 and the FLA Setting at 50 A).

Trip Class

Trip Class is defined as the maximum time (in seconds) for an overload trip to occur when the motor's operating current is six times its rated current. The E3 Overload Relay offers an adjustable trip class range of 5...30, which can be programmed in increments of one via Trip Class, Parameter 29.

Trip Curves

The following figures illustrate the E3 Overload Relay's time-current characteristics for trip classes 5, 10, 20, and 30.

Figure 30 - Time-Current Characteristics for Trip Classes 5, 10, 20, & 30

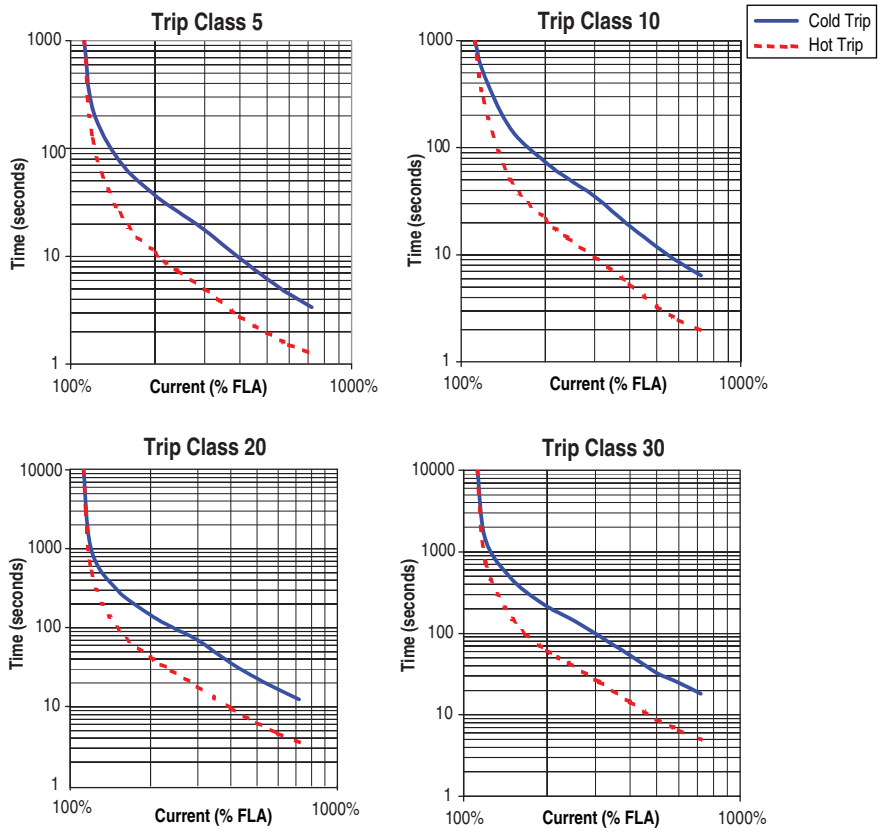

For trip class time-current characteristics other than 5, 10, 20, or 30, scale the Class 10 trip time according to the following table:

Table 19 - Time-Current Characteristic Scaling Factors

Trip Class	Trip Class 10 Multiplier	Trip Class	Trip Class 10 Multiplier	Trip Class	Trip Class 10 Multiplier
5	0.5	14	1.4	23	2.3
6	0.6	15	1.5	24	2.4
7	0.7	16	1.6	25	2.5
8	0.8	17	1.7	26	2.6
9	0.9	18	1.8	27	2.7
10	1.0	19	1.9	28	2.8
11	1.1	20	2.0	29	2.9
12	1.2	21	2.1	30	3.0
13	1.3	22	2.2		

Auto/Manual Reset

OL/PTC ResetMode, Parameter 30, allows the user to select the reset mode for the E3 Overload Relay after an overload or thermistor (PTC) trip. If an overload trip occurs and automatic reset mode is selected, the E3 Overload Relay will automatically reset when the value stored in % Therm Utilized, Parameter 9, falls below the value stored in OL Reset Level, Parameter 31. If manual reset mode is selected, the E3 Overload Relay can be manually reset after the % Therm Utilized is less than the OL Reset Level.

OL Reset Level, Parameter 31, is adjustable from 1 to 100% TCU. The following table illustrates the typical overload reset time delay when OL Reset Level is set to 75% TCU.

Table 20 - Typical Overload Relay Reset Time Delays

Trip Class	Reset Delay Time in Seconds ❶
5	45
10	90
15	135
20	180
30	270

❶ Times shown are based on OL Reset Level, Parameter 31, being set to 75% TCU.

For reset time delays corresponding to other OL Reset Level settings, see the following charts.

Figure 31 - Overload Reset Times

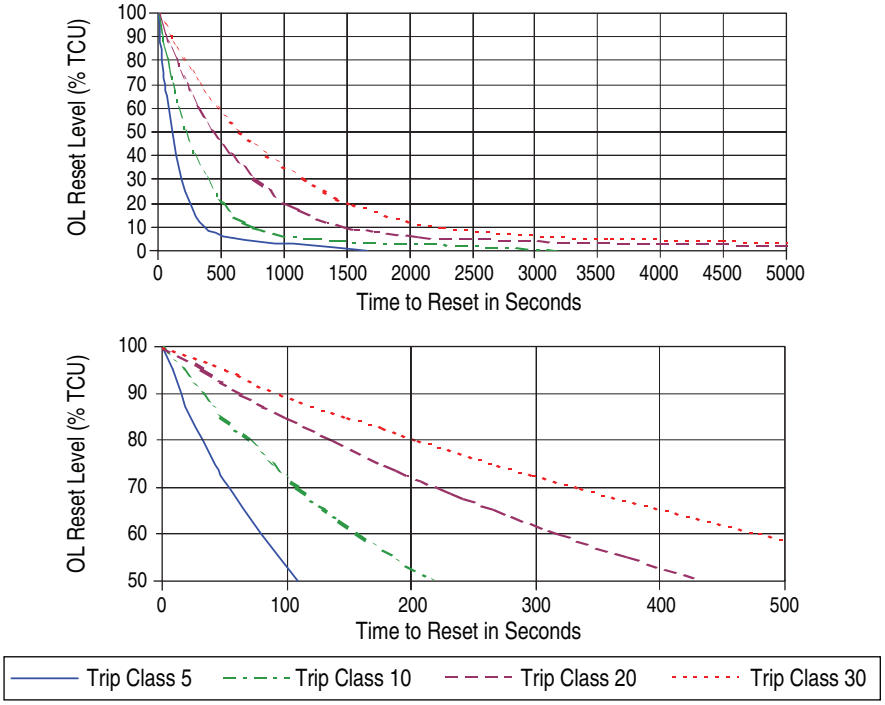

ATTENTION: In explosive environment applications, OL/PTC Reset Mode, Parameter 30, **must** be set to Manual.

ATTENTION: In an explosive environment applications, OL Reset Level, Parameter 31, must be set as low as possible or in accordance with the motor thermal time constant.

Overload Warning

The E3 Overload Relay will indicate an overload warning if:

- no warning currently exists,
- overload warning is enabled, and
- % Therm Utilized is equal to or greater than OL Warn Level.

When the overload warning conditions are satisfied, the:

- TRIP/WARN LED status indicator will flash an amber 2-blink pattern,
- Warning Status, Parameter 15, will set to 1, and
- Device Status, Parameter 21, will set to 1.

OL Warn Level, Parameter 32, can be used as an alert for impending overload trip and is adjustable from 0...100% TCU.

Overload Diagnostics

Time to Trip

When the measured motor current exceeds the trip rating of the E3 Overload Relay, the Time to Trip, Parameter 12, indicates the estimated time remaining before an overload trip occurs. When the measured current is below the trip rating, the Time to Trip value is reported as 9,999 seconds.

Time To Reset

After an overload trip, the E3 Overload Relay will report the time remaining until the device can be reset through Time to Reset, Parameter 13. Once the % Therm Utilized value falls to or below the OL Reset Level, the Time to Reset value will indicate zero until the overload trip is reset. After an overload trip is reset, the Time to Reset value is reported as 9,999 seconds.

Non-Volatile Thermal Memory

The E3 Overload Relay includes a non-volatile circuit to provide thermal memory. The time constant of the circuit corresponds to a Trip Class 30 setting. During normal operation, the thermal memory circuit is continually monitored and updated to accurately reflect the thermal utilization of the connected motor. If power is removed, the thermal memory of the circuit decays at a rate equivalent to the cooling of a Trip Class 30 application. When the power is re-applied, the E3 Overload Relay checks the thermal memory circuit voltage to determine the initial value of % Therm Utilized, Parameter 9.

Phase Loss Protection

A high current imbalance, or phase failure, can be caused by defective contacts in a contactor or circuit breaker, loose terminals, blown fuses, sliced wires, or faults in the motor. When a phase failure exists, the motor can experience an additional temperature rise or excessive mechanical vibration. This may result in a degradation of the motor insulation or increased stress on the motor bearings. Rapid phase loss detection helps to minimize the potential damage and loss of production.

Phase Loss Trip

The E3 Overload Relay will trip with a phase loss indication if:

- no trip currently exists,
- Phase Loss Protection is enabled,
- PL Inhibit Time has expired, and

- Current Imbal is equal to or greater than 100% for a time period greater than the programmed PL Trip Delay.

If the E3 Overload Relay trips on a phase loss, the:

- TRIP/WARN LED status indicator will flash a red 3-blink pattern,
- bit 2 in Trip Status, Parameter 14 will set to 1,
- bit 0 of Device Status, Parameter 21, will set to 1,
- trip relay contact will be open, and
- outputs will be placed in their Protective Fault state (if so programmed).

IMPORTANT The Protection Fault State of OUT A and OUT B is defined by:
- OUTA Pr FltState, Parameter 65,
- OUTA PrFltValue, Parameter 66,
- OUTB Pr FltState, Parameter 71, and
- OUTB Pr FltValue, Parameter 72.

PL Inhibit Time, Parameter 33, allows the installer to inhibit a phase loss trip from occurring during the motor starting sequence. It is adjustable from 0...250 seconds.

PL Trip Delay, Parameter 34, allows the installer to define the time period for which a phase loss condition must be present before a trip occurs. It is adjustable from 0.1...25.0 seconds.

IMPORTANT The phase loss inhibit timer starts after the maximum phase of load current transitions from 0 A to 30% of the device's minimum FLA Setting. The E3 Overload Relay does not begin monitoring for a phase loss condition until the PL Inhibit Time expires.

Ground Fault Protection (E3 Plus)

In isolated or high impedance-grounded systems, core-balanced current sensors are typically used to detect low level ground faults caused by insulation breakdowns or entry of foreign objects. Detection of such ground faults can be used to interrupt the system to prevent further damage or to alert the appropriate personnel to perform timely maintenance.

The E3 Plus Overload Relay provides core-balanced ground fault detection capability, with the option of enabling Ground Fault Trip, Ground Fault Warning, or both. The ground fault detection method and range depends upon the catalog number of the relay ordered.

Figure 32 - Ground Fault Capabilities

Catalog Number	Series	Ground Fault Method	Ground Fault Trip/Warning Range
193/592-EC2_ _, & 193-EC2ZZ (≤ 90A)	B & C	Internal 1…5 A	1…5 A
193-EC2_ _, except for 193-EC2ZZ (> 90A)	B	External ❶	1…5 A
193/592-EC3_ _, & 193-EC5_ _	C	External ❷❸	20mA…5 A

❶ A Catalog Number 825-CBCT Core Balance Ground Fault Sensor must be used.

❷ One of the following Catalog Number 193-CBCT_ Core Balance Ground Fault Sensors must be used:

1 — Ø 20 mm window
2 — Ø 40 mm window
3 — Ø 65 mm window
4 — Ø 85 mm window

❸ 20…100 mA for resistive loads only. For motor load information, consult your local Rockwell Automation sales office or Allen Bradley distributor.

ATTENTION: The E3 Plus Overload Relay is **not** a ground fault circuit interrupt or for personal protection as defined in Article 100 of the NEC.

ATTENTION: The E3 Plus Overload Relay is **not** intended to signal a disconnecting means to open the faulted current. A disconnecting device must be capable of interrupting the maximum available fault current of the system on which it is used.

Ground Fault Setting Range

Series A and B E3 Plus Overload Relays have one ground fault sensing range, 1...5 A. E3 Plus Overload Relays, 193/592-EC3_ _ and 193/592-EC5_ _ Series C and later, using an193-CBCT external core balance ground fault sensor have four sensing ranges which are selectable via the GF Sensing Range, Parameter 106. These ranges are:

- 20...100 mA — For resistive loads only. For motor load information, consult your local Rockwell Automation sales office or Allen-Bradley distributor.
- 100...500 mA
- 200 mA ...1.0 A
- 1.0...5.0 A

Ground Fault Trip

The E3 Plus Overload Relay will trip with a ground fault indication if:

- no trip currently exists,
- ground fault protection is enabled,

- GF Inhibit Time has expired, and
- GF Current is equal to or greater than the GF Trip Level for a time period greater than the GF Trip Delay.

If the E3 Plus Overload Relay trips on a ground fault, the:

- TRIP/WARN LED will flash a red 4-blink pattern,
- bit 3 in Parameter 14, Trip Status, will set to 1,
- bit 0 of Parameter 21, Device Status, will set to 1,
- trip relay contact will open, and
- outputs will be placed in their Protection Fault state (if so programmed).

IMPORTANT The Protection Fault State of OUT A and OUT B is defined by:

- OUTA Pr FltState, Parameter 65
- OUTA Pr FltValue, Parameter 66
- OUTB Pr FltState, Parameter 71
- OUTB Pr FltValue, Parameter 72

GF Inhibit Time, Parameter 35, allows the installer to inhibit a ground fault trip from occurring during the motor starting sequence and is adjustable from 0...250 seconds.

GF Trip Delay, Parameter 36, allows the installer to define the time period a ground fault condition must be present before a trip occurs and is adjustable from 0.0...25.0 seconds.

Parameter 37, GF Trip Level, allows the installer to define the ground fault current at which the E3 Plus Overload Relay will trip and is adjustable from:

- 1.0...5.0 A (Catalog Number 193/592-EC2_ _)
- 20.0 mA...5.0 A (Catalog Number 193/592-EC3_ _ & 193/592-EC5_ _)

IMPORTANT The ground fault inhibit timer starts after the maximum phase load current transitions from 0 A to 30% of the device's minimum FLA Setting or the GF Current is greater than or equal to 50% of the device's minimum GF Current Setting. The E3 Overload Relay does not begin monitoring for a ground fault condition until the GF Inhibit Time expires.

Ground Fault Trip Inhibit

Ground faults can quickly rise from low-level arcing levels to short circuit magnitudes. A motor starting contactor may not have the necessary rating to interrupt a high magnitude ground fault. In these circumstances it is desirable for an upstream circuit breaker with the proper rating to interrupt the ground fault.

NOTE: The GF Trip Inhibit feature is only available in E3 Plus Overload Relays Series B and later.

When enabled, GF Trip Inhibit, Parameter 89, inhibits a ground fault trip from occurring when the ground fault current exceeds the maximum range of the core balance sensor (approximately 10 A).

Ground Fault Warning

The E3 Plus Overload Relay will indicate a ground fault warning if:

- no warning currently exists,
- ground fault warning is enabled,
- GF Inhibit Time has expired, and
- GF Current is equal to or greater than the GF Warn Level (Series C and later devices) for a time period greater than the GF Warn Delay.

When the ground fault warning conditions are satisfied, the

- TRIP/WARN LED status indicator will flash an amber 4-blink pattern,
- bit 3 in Warning Status, Parameter 15, will set to 1, and
- bit 1 of Device Status, Parameter 21, will go to 1.

GF Warn Level, Parameter 38, allows the installer to define the ground fault current at which the E3 Plus Overload Relay will indicate a warning and is adjustable from 1.0...5.0 A.

In Series C and later, GF Warn Delay, Parameter 105, allows the installer to define the time period (adjustable from 0.0...25.0 s) for which a ground fault condition must be present before a warning occurs.

IMPORTANT In E3 Plus Overload Relay Series A and B, the ground fault warning function does not include a time delay feature. Once the GF Inhibit Time has expired, the ground fault warning indication is instantaneous.

Ground Fault Filter

An E3 Plus Overload Relay with firmware revision 5.00 and higher has the capability to filter ground fault currents for High Resistance Grounded (HRG) systems from its current-based protection trip and warning functions. These filters include: Thermal Overload, Phase Imbalance, Jam, and Stall.

The Ground Fault Filter is useful for smaller-sized motors that trip unexpectedly due to a controlled ground fault current that is significant relative to the current draw of the electric motor. GF Filter Enable, Parameter 131, allows the user to enable this filter.

This filter only disables the effects of the ground fault current from the current-based motor protection trip and warning functions. Current-based diagnostic data will be reported unfiltered when this feature is enabled.

Stall Protection

When a motor stalls during its starting sequence, the motor heats up very rapidly. After the permissible stalling time, the motor reaches the temperature limit of its insulation. Rapid stall detection during the starting sequence can extend the motor's life, as well as minimize potential damage and loss of production.

Stall Time

The E3 Overload Relay will trip with a stall indication when:

- no trip currently exists,
- stall protection is enabled, and
- the maximum phase current is greater than the Stall Trip Level for a time period greater than the Stall Enabled Time.

If the E3 Overload Relay trips on a stall, the:

- TRIP/WARN LED status indicator will flash a red 5-blink pattern,
- bit 4 in Trip Status, Parameter 14, will set to 1,
- bit 0 in Device Status, Parameter 21, will set to 1
- Trip Relay contacts will open, and
- outputs will be placed in their Protection Fault state (if so programmed).

IMPORTANT The Protection Fault State of OUT A and OUT B is defined by:

- OUTA Pr FltState, Parameter 65
- OUTA Pr FltValue, Parameter 66
- OUTB Pr FltState, Parameter 71
- OUTB Pr FltValue, Parameter 72

Stall Enabled Time, Parameter 39, allows the installer to adjust the time the E3 Overload Relay monitors for a stall condition during the motor starting sequence and is adjustable from 0...250 seconds.

Stall Trip Level, Parameter 40, allows the installer to define the locked rotor current and is adjustable from 100...600% of the FLA Setting, Parameter 28.

IMPORTANT Stall Protection is only enabled during the motor starting sequence. If the maximum phase of load current falls below the programmed Stall Trip Level before the Stall Enabled Time elapses, the E3 Overload Relay disables Stall Protection until the next motor starting sequence.

IMPORTANT The E3 Overload Relay considers a motor to have begun its starting sequence if the maximum phase of motor current transitions from 0 A to approximately 30% of the minimum FLA Setting.

Jam Protection (High Overload)

Motor current greater than the motor's nameplate rating may indicate a high overload or stall condition, such as an overloaded conveyor or jammed gear. These conditions can result in overheating of the motor and equipment damage. Rapid jam fault detection helps to minimize damage and loss of production.

Jam Trip

The E3 Overload Relay will trip with a jam indication if:

- no trip currently exists,
- Jam Protection is enabled,
- Jam Inhibit Time has expired, and
- the maximum phase current is greater than the Jam Trip Level for a time period greater than the Jam Trip Delay.

If the E3 Overload Relay trips on a jam, the:

- no trip currently exists,
- Jam Protection is enabled,
- Jam Inhibit Time has expired,
- maximum phase current is greater than the Jam Trip Level for a time period greater than the Jam Trip Delay.

If the E3 Overload Relay trips on a jam, the:

- TRIP/WARN LED status indicator will flash a red 6-blink pattern,
- bit 5 in Trip Status, Parameter 14, will set to 1,
- bit 0 in Device Status, Parameter 21, will set to 1,
- Trip Relay contact will open, and
- outputs will be placed in their Protection Fault State (if so programmed).

IMPORTANT The Protection Fault State of OUT A and OUT B is defined by:

- OUTA Pr FltState, Parameter 65
- OUTA Pr FltValue, Parameter 66
- OUTB Pr FltState, Parameter 71
- OUTB Pr FltValue, Parameter 72

Jam Inhibit Time, Parameter 41, allows the installer to inhibit a jam trip from occurring during the motor starting sequence. It is adjustable from 0...250 seconds.

Jam Trip Delay, Parameter 42, allows the installer to define the time period a jam condition must be present before a trip occurs. It is adjustable from 0.1...25.0 seconds.

Jam Trip Level, Parameter 43, allows the installer to define the current at which the E3 Overload Relay will trip on a jam. It is user-adjustable from 50...600% of the FLA Setting, Parameter 28.

IMPORTANT The Jam Inhibitor timer starts after the maximum phase of load current transitions from 0 A to 30% of the device's minimum FLA setting. The E3 Overload Relay does not begin monitoring for a jam condition until the Jam Inhibit Time expires.

Jam Warning

The E3 Overload Relay will indicate a Jam warning if:

- no warning currently exists,
- Jam Warning is enabled,
- Jam Inhibit Time has expired, and
- the maximum phase current is equal to or greater than the JamWarn Level.

When the Jam Warning conditions are satisfied, the:

- TRIP/WARN LED will flash an amber 6-blink pattern,
- bit 5 in Parameter 15, Warning Status, will set to "1", and
- bit 1 in Parameter 21, Device Status, will set to "1".

Jam Warn Level, Parameter 44, allows the installer to define the current at which the E3 Overload Relay will indicate a warning. It is user-adjustable from 50...600% for the FLA Setting, Parameter 28.

IMPORTANT The Jam Warning function does not include a time delay feature. Once the Jam Inhibit Time has expired, the Jam Warning indication is instantaneous.

Underload Protection

Motor current less than a specific level may indicate a mechanical malfunction in the installation, such as a torn conveyor belt, damaged fan blade, broken shaft, or worn tool. Such conditions may not harm the motor, but they can lead to loss of production. Rapid underload fault detection helps to minimize damage and loss of production.

Underload Trip

The E3 Overload Relay will trip with an underload indication if:

- no trip currently exists,
- Underload Protection is enabled,
- UL Inhibit Time has expired, and

- minimum phase current is less than the UL Trip Level for a time period greater than the UL Trip Delay.

If the E3 Overload Relay trips on an underload, the:

- TRIP/WARN LED will flash a red 7-blink pattern,
- bit 6 in Parameter 14, Trip Status, will set to "1",
- bit 0 of Parameter 21, Device Status, will set to "1",
- Trip Relay contact will open, and
- outputs will be placed in their Protection Fault State (if so programmed).

IMPORTANT The Protection Fault State of OUT A and OUT B is defined by:

- OUTA Pr FltState, Parameter 65
- OUTA Pr FltValue, Parameter 66
- OUTB Pr FltState, Parameter 71
- OUTB Pr FltValue, Parameter 72

UL Inhibit Time, Parameter 45, allows the installer to inhibit an underload trip from occurring during the motor starting sequence and is adjustable from 0...250 seconds.

UL Trip Delay, Parameter 46, allows the installer to define the time period that an underload condition must be present before a trip occurs. It is adjustable from 0.1...25.0 seconds.

UL Trip Level, Parameter 47, allows the installer to define the current at which the E3 Overload Relay will trip on an Underload. It is user-adjustable from 10...100% ❶ of the FLA Setting, Parameter 28.

❶ 50…100% for devices with firmware revision (FRN) 1.003 and earlier.

IMPORTANT The Underload Inhibit Timer starts after the maximum phase of load current transitions from 0 A to 30% of the device's minimum FLA setting. The E3 Overload Relay does not begin monitoring for an underload condition until the UL Inhibit Time expires.

IMPORTANT For any given application, the practical limit of the UL Trip Level, Parameter 47, will be dependent on the FLA Setting and the lower limit of the E3 Overload Relay's current measurement capability. See Table 34 on page 142.

Underload Warning

The E3 Overload Relay will immediately indicate an Underload warning if:

- no warning currently exists,
- Underload Warning is enabled,
- UL Inhibit Time has expired, and

- minimum phase current is less than the UL Warn Level.

When the Underload Warning conditions are satisfied, the:

- TRIP/WARN LED will flash an amber 7-blink pattern,
- bit 6 in Parameter 15, Warning Status, will set to "1", and
- bit 1 of Parameter 21, Device Status, will set to "1".

UL Warn Level, Parameter 48, allows the installer to define the current at which the E3 Overload Relay will indicate a warning. It is user-adjustable from 10...100% ❶ of the FLA Setting, Parameter 28.

❶ 50…100% for devices with firmware revision (FRN) 1.003 and earlier.

IMPORTANT The Underload Warning function does not include a time delay feature. Once the UL Inhibit Time has expired, the Underload Warning indication is instantaneous.

Thermistor/PTC Protection

The E3 Plus Overload Relay models -EC2 and -EC3 provide terminals IT1 and IT2 for the connection of positive temperature coefficient (PTC) thermistor sensors. PTC sensors are commonly embedded in motor stator windings to monitor the motor winding temperature. When the motor winding temperature reaches the PTC sensor's temperature rating, the PTC sensor's resistance transitions from a low to high value. Since PTC sensors react to actual temperature, enhanced motor protection can be provided to address such conditions as obstructed cooling and high ambient temperatures.

The following table defines the E3 Plus Overload Relay's PTC thermistor input and response ratings.

Table 21 - E3 Plus PTC Input Ratings

Resistance:	**Response**	3400 Ω ± 150 Ω
	Reset	1600 Ω ± 100 Ω
	Short-Circuit Trip	25 Ω ± 10 Ω
Maximum Voltage at:	**PTC Terminals (R_{PTC} = 4k Ω)**	< 7.5V
	PTC Terminals (R_{PTC} = open)	30V
Maximum Number of Sensors		6
Maximum Cold Resistance of PTC Sensor Chain		1500 Ω
Response Time		800 ms

The following figure illustrates the required PTC sensor characteristics per IEC-34-11-2.

Figure 33 - PTC Sensor Characteristics per IEC-34-11-2

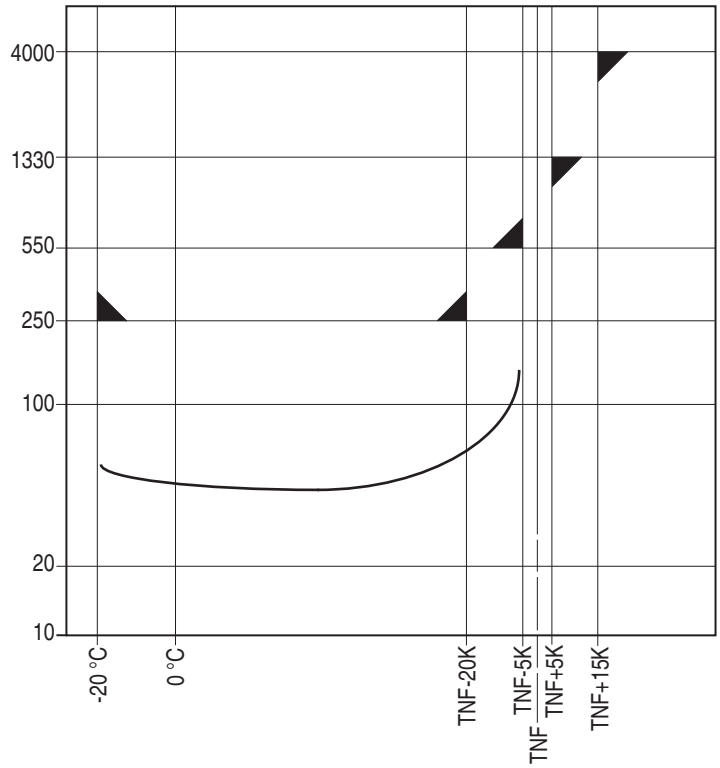

PTC Trip

The E3 Plus Overload Relay will trip with a PTC indication if:

- no trip currently exists,
- PTC Protection is enabled, and
- resistance across terminals 1T1 and 1T2 is either greater than the relay's response resistance or less than the short-circuit trip resistance.

If the E3 Plus Overload Relay trips on a PTC, the:

- TRIP/WARN LED will flash a red 8-blink pattern,
- bit 7 in Trip Status, Parameter 14, will set to "1",
- bit 0 of Device Status, Parameter 21, will set to "1",
- Trip Relay contact will open, and
- outputs will be placed in their Protection Fault State (if so programmed).

IMPORTANT The Protection Fault State of OUT A and OUT B is defined by:

- OUTA Pr FltState, Parameter 65
- OUTA Pr FltValue, Parameter 66
- OUTB Pr FltState, Parameter 71
- OUTB Pr FltValue, Parameter 72

Parameter 30, OL/PTC ResetMode, allows the user to select the reset mode for the E3 Plus Overload Relay after an overload or thermistor (PTC) trip. If a PTC trip occurs and automatic reset mode is selected, the relay will automatically reset when the PTC resistance drops below the reset resistance. If manual reset mode is selected, the E3 Plus Overload Relay must be manually reset after the PTC resistance drops below the relay's reset resistance.

PTC Warning

The E3 Plus Overload Relay will immediately indicate a PTC warning if:

- no warning currently exists,
- PTC Warning is enabled, and
- resistance across terminals 1T1 and 1T2 is either greater than the E3 Plus Overload Relay's response resistance or less than the short-circuit trip resistance.

When the PTC warning conditions are satisfied, the:

- TRIP/WARN LED will flash an amber 8-blink pattern,
- bit 7 in Warning Status, Parameter 15, will set to "1", and
- bit 1 of Device Status, Parameter 21, will set to "1".

Current Imbalance Protection

A current imbalance can be caused by an unbalance in the voltage supply, unequal motor winding impedance, or long and varying wire lengths. When a current imbalance exists, the motor can experience an additional temperature rise, resulting in degradation of the motor insulation and reduction of life expectancy. Rapid Current Imbalance fault detection helps extend motor life expectancy and minimize potential damage and loss of production.

Current Imbalance can be defined by the following equation:

$$\%CI = 100\% * (I_d/I_a)$$

where

%CI = Percent Current Imbalance

I_d = Maximum Deviation from the Average Current

I_a = Average Current

Current Imbalance Trip

The E3 Overload Relay will trip with a Current Imbalance indication if:

- no trip currently exists,

- Current Imbalance protection is enabled,
- CI Inhibit Time has expired, and
- Current Imbal is equal to or greater than the CI Trip Level for a time period greater than the CI Trip Delay.

If the relay trips on a Current Imbalance, the:

- TRIP/WARN LED will flash a red 9-blink pattern,
- bit 8 in Trip Status, Parameter 14, will set to "1",
- bit 0 in Device Status, Parameter 21, will go to "1",
- Trip Relay contacts will open, and
- outputs will be placed in their Protection Fault State (if so programmed).

IMPORTANT The Protection Fault State of OUT A and OUT B is defined by:

- OUTA Pr FltState, Parameter 65
- OUTA Pr FltValue, Parameter 66
- OUTB Pr FltState, Parameter 71
- OUTB Pr FltValue, Parameter 72

CI Inhibit Time, Parameter 49, allows the installer to inhibit a current imbalance trip from occurring during the motor starting sequence. It is adjustable from 0...250 seconds.

CI Trip Delay, Parameter 50, allows the installer to define the time period for which a current imbalance condition must be present before a trip occurs. It is adjustable from 0.1...25.0 seconds.

CI Trip Level, Parameter 51, allows the installer to define the percent current imbalance which will cause the relay to trip on a Current Imbalance. It is adjustable from 10...100%.

IMPORTANT The Current Imbalance inhibit timer starts after the maximum phase of load current transitions from 0 A to 30% of the device's minimum FLA Setting. The E3 Overload Relay does not begin monitoring for a current imbalance condition until the CI Inhibit Time expires.

Current Imbalance Warning

The E3 Overload Relay will indicate a Current Imbalance warning if:

- no warning currently exists,
- Current Imbalance warning is enabled,
- CI Inhibit Time has expired, and
- Current Imbal is equal to or greater than CI Warn Level.

When the Current Imbalance warning conditions are satisfied, the:

- TRIP/WARN LED will flash an amber 9-blink pattern,
- bit 8 in Warning Status, Parameter 15, will set to “1”, and
- bit 1 in Device Status, Parameter 21, will set to “1”.

CI Warn Level, Parameter 52, allows the installer to define the percent current imbalance at which the E3 Overload Relay will indicate a warning. It is user-adjustable from 10...100%.

IMPORTANT The Current Imbalance Warning function does not include a time delay feature. Once the CI Inhibit Time has expired, The CI warning indication is instantaneous.

Communication Fault Protection

A disruption of the communication link between the E3 Overload Relay and a DeviceNet network can result in the loss of application control and/or critical process diagnostic data. Rapid communication fault detection helps minimize potential damage due to uncontrolled or unmonitored applications.

Comm Fault Trip

The E3 Overload Relay will trip with a Comm Fault indication if:

- no trip currently exists,
- Comm Fault protection is enabled, and
- the E3 Overload Relay experiences a loss of communication.

If the relay trips on a Comm Fault, the:

- Network Status LED will blink red or become solid red
- TRIP/WARN LED will flash a red 10-blink pattern
- bit 9 in Trip Status, Parameter 14, will set to “1”
- bit 0 in Device Status, Parameter 21, will set to “1”
- Trip Relay contacts will open, and
- outputs will be placed in their Protection Fault State (if so programmed).

IMPORTANT The Protection Fault State of OUT A and OUT B is defined by:

- OUTA Pr FltState, Parameter 65
- OUTA Pr FltValue, Parameter 66
- OUTB Pr FltState, Parameter 71
- OUTB Pr FltValue, Parameter 72

IMPORTANT The Comm Fault State of OUT A and OUT B is defined by:

- OUTA Dn FltState, Parameter 67
- OUTA Dn FltValue, Parameter 68
- OUTB Dn FltState, Parameter 73
- OUTB Dn FltValue, Parameter 74

Comm Fault Warning

The E3 Overload Relay will indicate a Comm Fault warning if:

- no warning currently exists,
- Comm Fault Warning is enabled, and
- the relay experiences a loss of communication.

When the Comm Fault warning conditions are satisfied, the:

- Network Status LED will blink red or become solid red,
- TRIP/WARN LED will flash an amber 10-blink pattern,
- bit 9 in Parameter 15, Warning Status, will set to “1”, and
- bit 1 of Parameter 21, Device Status, will set to “1”.

If a communication fault occurs and either Comm Fault Trip is not enabled or the Pr FltState parameters are set to “Ignore”, the:

- Network Status LED will blink red or become solid red and
- outputs will be placed in their Comm Fault.

Communication Idle Protection

When a programmable controller is placed into the program mode, the execution of its ladder program is suspended, and any connected networks go to an idle state. If inadvertent, this can result in the loss of application control and/or critical process diagnostic data. Rapid communication idle detection helps minimize the potential damage due to uncontrolled or unmonitored applications.

Comm Idle Trip

The E3 Overload Relay will trip with a Comm Idle indication if:

- no trip currently exists,
- Comm Idle protection is enabled, and
- the network controller that the E3 Overload Relay is communicating to is placed to program mode.

If the relay trips on a Comm Idle, the:

- TRIP/WARN LED will flash a red 11-blink pattern,

- bit 10 in Trip Status, Parameter 14, will set to “1”,
- bit 0 of Device Status, Parameter 21, will set to “1”,
- Trip Relay contact will open, and
- outputs will be placed in their Protection Fault State (if so programmed).

IMPORTANT The Protection Fault State of OUT A and OUT B is defined by:

- OUTA Pr FltState, Parameter 65
- OUTA Pr FltValue, Parameter 66
- OUTB Pr FltState, Parameter 71
- OUTB Pr FltValue, Parameter 72

IMPORTANT The Comm Fault State of OUT A and OUT B is defined by:

- OUTA Dn FltState, Parameter 67
- OUTA Dn FltValue, Parameter 68
- OUTB Dn FltState, Parameter 73
- OUTB Dn FltValue, Parameter 74

Comm Idle Warning

The E3 Overload Relay will indicate a Comm Idle warning if:

- no warning currently exists,
- Comm Idle Warning is enabled, and
- the network controller that is communicating to the E3 Overload Relay is
- placed in idle mode.

When the Comm Idle warning conditions are satisfied, the:

- TRIP/WARN LED will flash an amber 11-blink pattern,
- bit 10 in Warning Status, Parameter 15, will set to “1”, and
- bit 1 in Device Status, Parameter 21, will set to “1”.

If a communication idle occurs and either Comm Idle Trip is not enabled or the Pr FltState parameters are set to “Ignore”, the outputs will be placed in their Comm Idle State.

Remote Trip

The Remote Trip function provided in series B and later devices allows the capability of tripping the E3 Overload Relay from a remote source (e.g., a vibration switch). Proper set-up requires that Remote Trip is enabled in Trip Enable, Parameter 24, and that an input assignment, Parameters 83 – 86, is configured for Remote Trip.

When the remote trip condition sensor contact closes, the:

- TRIP/WARN LED will flash a red 15-blink pattern,
- bit 14 in Trip Status, Parameter 14, will set to "1",
- Trip Relay contact will open, and
- outputs will be placed in their Protection Fault State (if so programmed).

IMPORTANT The Protection Fault State of OUT A and OUT B is defined by:

- OUTA Pr FltState, Parameter 65
- OUTA Pr FltValue, Parameter 66
- OUTB Pr FltState, Parameter 71
- OUTB Pr FltValue, Parameter 72

Voltage Protection

The E3 Plus model EC5 has the capability to protect against poor voltage quality by offering voltage based protection. The user can prevent a contactor from energizing if the voltage is either too high or too low.

Under Voltage (UV) Trip

The E3 Overload Relay will trip with a UV indication if:

- no trip currently exists,
- Under Voltage protection is enabled,
- UV Inhibit Time has expired, and
- the Average Voltage L-L is equal to or less than the UV Trip Level for a time period greater than the programmed UV Trip Delay.

When the under voltage trip conditions are satisfied, the:

- TRIP/WARN LED will flash a red 1 long and 2 short blink pattern,
- bit 1 in UV Trip Status, Parameter 160, will go to "1"
- bit 0 of Device Status, Parameter 21, will go to "1"
- Trip Relay contact will be open, and
- outputs will be placed in their Protection Fault state (if so programmed).

UV Inhibit Time, Parameter 215, allows the installer to inhibit an under voltage trip from occurring during the motor starting sequence and is adjustable from 0...250 seconds.

UV Trip Delay, Parameter 216, allows the installer to define the time period an under voltage condition must be present before a trip occurs. It is adjustable from 0.1...25.0 seconds.

UV Trip Level, Parameter 217, allows the installer to define the average L-L voltage in which the E3 Plus Overload Relay will trip. It is adjustable from 0...65535 V.

Under Voltage (UV) Warning

The E3 Overload Relay will immediately indicate an under voltage warning condition if:

- no warning currently exists,
- UV Warning is enabled,
- UV Inhibit Time has expired, and
- Average Voltage L-L is equal to or less than the UV Warn Level.

When the under voltage warning conditions are satisfied, the:

- TRIP/WARN LED will flash an amber 1 long and 2 short blink pattern,
- bit 1 in V Warning Status, Parameter 161, will set to "1", and
- bit 1 of Device Status, Parameter 21, will go to "1".

UV Warn Level, Parameter 218, allows the installer to define the average L-L voltage in which the E3 Plus Overload Relay will indicate a warning and is adjustable from 0...65535V.

Over Voltage (OV) Trip

The E3 Overload Relay will trip with an over voltage indication if:

- no trip currently exists,
- OV Protection is enabled,
- OV Inhibit Time has expired, and
- Average Voltage L-L is equal to or greater than OV Trip Level for a time period
- greater than the programmed OV Trip Delay.

When the over voltage trip conditions are satisfied, the:

- TRIP/WARN LED will flash a red 1 long and 3 short blink pattern,
- bit 2 in Parameter 160, V Trip Status, will set to "1"
- bit 0 of Parameter 21, Device Status, will set to "1"
- Trip Relay contact will be open, and
- outputs will be placed in their Protection Fault state (if so programmed).

OV Inhibit Time, Parameter 219, allows the installer to inhibit an over voltage trip from occurring during the motor starting sequence and is adjustable from 0...250 seconds.

OV Trip Delay, Parameter 220, allows the installer to define the time period an over voltage condition must be present before a trip occurs. It is adjustable from 0.1...25.0 seconds.

OV Trip Level, Parameter 221, allows the installer to define the average L-L voltage in which the E3 Plus Overload Relay will trip. It is adjustable from 0...65535 V.

Over Voltage (OV) Warning

The E3 Overload Relay will immediately indicate an over voltage warning condition if:

- no warning currently exists,
- OV Warning is enabled,
- OV Inhibit Time has expired, and
- Average Voltage L-L is equal to or greater than the OV Warn Level.

When the under voltage warning conditions are satisfied, the:

- TRIP/WARN LED will flash an amber 1 long and 3 short blink pattern,
- bit 2 in V Warning Status, Parameter 161, will set to “1”, and
- bit 1 of Device Status, Parameter 21, will set to “1”.

OV Warn Level, Parameter 222, allows the installer to define the average L-L voltage in which the E3 Plus Overload Relay will indicate a warning and is adjustable from 0...65535 V.

Voltage Unbalance Protection

An unbalance in the voltage supply will create an unequal motor winding impedance resulting in a current imbalance. This causes the motor to experience an additional temperature rise, resulting in degradation of the motor insulation and reducing its life expectancy. Voltage Unbalance detection helps extend motor life expectancy and minimize potential damage and loss of production.

Voltage Unbalance can be defined by the following equation:

$$\%VU = 100\% * (V_d/V_a)$$

where:

%VU = Percent Voltage Unbalance

V_d = Maximum Deviation from the Average Voltage

V_a = Average Voltage

Voltage Unbalance Trip

The E3 Overload Relay will trip with a Voltage Unbalance indication if:

- no trip currently exists,
- Voltage Unbalance protection is enabled,
- V UnbalInhibitTime has expired, and
- Volt Unbalance is equal to or greater than the V UnbalTripLevel for a time period greater than the V UnbalTripDelay.

If the relay trips on a Voltage Unbalance, the:

- TRIP/WARN LED will flash red a 1 long and 4 short blink pattern,
- bit 3 in V Trip Status, Parameter 160, will set to "1",
- bit 0 in Device Status, Parameter21, will set to "1",
- Trip Relay contacts will open, and
- outputs will be placed in their Protection Fault State (if so programmed).

V UnbalInhibitTime, Parameter 229, allows the installer to inhibit a voltage unbalance trip from occurring during the motor starting sequence. It is adjustable from 0...250 seconds.

V UnbalTripDelay, Parameter 230, allows the installer to define the time period for which a voltage unbalance condition must be present before a trip occurs. It is adjustable from 0.1...25.0 seconds.

V UnbalTripLevel, Parameter 231, allows the installer to define the percent voltage unbalance which will cause the relay to trip on a voltage unbalance. It is adjustable from 0...100%.

Voltage Unbalance Warning

The E3 Overload Relay will indicate a Voltage Unbalance warning if:

- no warning currently exists,
- Voltage Unbalance warning is enabled,
- VUnbalInhibitTime has expired, and
- Volt Unbalance is equal to or greater than V UnbalWarnLevel.

When the Voltage Unbalance warning conditions are satisfied, the:

- TRIP/WARN LED will flash an amber 1 long and 4 short blink pattern,
- bit 3 in V Warn Status, Parameter 161, will set to "1", and
- bit 1 in Device Status, Parameter 21, will set to "1".

V UnbalWarnLevel, Parameter 232, allows the installer to define the percent voltage unbalance in which the E3 Overload Relay will indicate a warning. It is user-adjustable from 0...100%.

Voltage Rotation Protection

Wiring of a three phase voltage system can effect the rotational direction of an electric motor. The E3 Plus model EC5 can protect against the improper phase rotation so that an electric motor rotates in the proper direction, ABC or ACB, to prevent equipment from being damaged.

Voltage Rotation Trip

The E3 Overload Relay will trip with a Voltage Rotation indication if:

- no trip currently exists,
- Voltage Rotation protection is enabled,
- Ph Rot InhibitTime has expired, and
- V Phase Rot is not equal to the Ph Rot Trip.

If the relay trips on a Voltage Rotation, the:

- TRIP/WARN LED will flash red a 1 long and 5 short blink pattern,
- bit 4 in V Trip Status, Parameter 160, will set to “1”,
- bit 0 in Device Status, Parameter 21, will set to “1”,
- Trip Relay contacts will open, and
- outputs will be placed in their Protection Fault State (if so programmed).

Ph Rot InhibitTime, Parameter 223, allows the installer to inhibit a voltage rotation trip from occurring during the motor starting sequence. It is adjustable from 0...250 seconds.

Ph Rot Trip, Parameter 224, allows the installer to define the proper phase rotation for the voltage system. It is adjustable from 1 (ABC) to 2 (ACB).

Voltage Rotation Warning

The E3 Overload Relay will indicate a Voltage Rotation warning if:

- no warning currently exists,
- Voltage Rotation warning is enabled,
- Ph Rot InhibitTime has expired, and
- V Phase Rot is not equal Ph Rot Trip.

When the Voltage Rotation warning conditions are satisfied, the following will occur:

- TRIP/WARN LED will flash an amber 1 long and 5 short blink pattern,
- bit 4 in V Warn Status, Parameter 161, will set to “1”, and
- bit 1 in Device Status, Parameter 21, will set to “1”.

Frequency Protection

The E3 Plus model EC5 has the capability to protect against poor voltage quality by offering frequency based protection. The user can prevent a contactor fromenergizing if the voltage frequency is either too high or too low.

Under Frequency (UF) Trip

The E3 Overload Relay will trip with an under frequency indication if:

- no trip currently exists,
- Under Frequency protection is enabled,
- UF Inhibit Time has expired, and
- Volt Frequency is equal to or less than UF Trip Level for a time period. greater than the programmed UF Trip Delay.

When the under frequency trip conditions are satisfied, the:

- TRIP/WARN LED will flash a red 1 long and 6 short blink pattern,
- bit 5 in V Trip Status, Parameter 160, will set to “1”,
- bit 0 of Device Status, Parameter 21, will set to “1”,
- Trip Relay contact will be open, and
- outputs will be placed in their Protection Fault state (if so programmed).

UF Inhibit Time, Parameter 233, allows the installer to inhibit an under frequency trip from occurring during the motor starting sequence and is adjustable from 0...250 seconds.

UF Trip Delay, Parameter 234, allows the installer to define the time period an under frequency condition must be present before a trip occurs. It is adjustable from 0.1...25.0 seconds.

UF Trip Level, Parameter 235, allows the installer to define the frequency in which the E3 Plus Overload Relay will trip. It is adjustable from 0...250 Hz.

Under Frequency Warning

The E3 Overload Relay will immediately indicate an under frequency warning condition if:

- no warning currently exists,
- UFWarning is enabled,
- UF Inhibit Time has expired, and
- Volt Frequency is equal to or less than the UF Warn Level.

When the under frequency warning conditions are satisfied, the:

- TRIP/WARN LED will flash an amber 1 long and 6 short blink pattern
- bit 5 in V Warning Status, Parameter 161, will set to “1”, and
- bit 1 of Device Status, Parameter 21, will set to “1”.

UF Warn Level, Parameter 236, allows the installer to define the frequency in which the E3 Plus Overload Relay will indicate a warning and is adjustable from 0...250 Hz.

Over Frequency (OF) Trip

The E3 Overload Relay will trip with an over frequency indication if:

- no trip currently exists,
- OF Protection is enabled,
- OF Inhibit Time has expired, and
- Volt Frequency is equal to or less than OF Trip Level for a time period greater than the programmed OF Trip Delay.

When the over frequency trip conditions are satisfied, the:

- TRIP/WARN LED will flash a red 1 long and 7 short blink pattern,
- bit 6 in V Trip Status, Parameter 160, will set to “1”,
- bit 0 of Device Status, Parameter 21, will set to “1”,
- Trip Relay contact will be open, and
- outputs will be placed in their Protection Fault state (if so programmed).

OF Inhibit Time, Parameter 237, allows the installer to inhibit an over frequency trip from occurring during the motor starting sequence and is adjustable from 0...250 seconds.

OF Trip Delay, Parameter 238, allows the installer to define the time period an over frequency condition must be present before a trip occurs. It is adjustable from 0.1...25.0 seconds.

OF Trip Level, Parameter 239, allows the installer to define the frequency in which the E3 Plus Overload Relay will trip. It is adjustable from 0...250 Hz.

Over Frequency (OF) Warning

The E3 Overload Relay will immediately indicate an over frequency warning condition if:

- no warning currently exists,
- OF Warning is enabled,
- OF Inhibit Time has expired, and
- Volt Frequency is equal to or greater than the OF Warn Level.

When the over frequency warning conditions are satisfied, the:

- TRIP/WARN LED will flash an amber 1 long and 7 short blink pattern,
- bit 6 in V Warning Status, Parameter 161, will set to “1”, and

- bit 1 of Device Status, Parameter 21, will set to “1”.

OF Warn Level, Parameter 240, allows the installer to define the frequency in which the E3 Plus Overload Relay will indicate a warning and is adjustable from 0...250 Hz.

Voltage Input Module Detection

The E3 Plus model EC5 uses a Voltage Input Module to collect the voltage signals of a power system. In the event that communications halt between the voltage input module and the relay module, the E3 Plus model EC5 can issue a trip or a warning to signify this unlikely event.

Voltage Hardware Trip

The E3 Overload Relay will trip with a Voltage Input Module Not Detected indication if:

- no trip currently exists,
- Voltage Hardware Fault protection is enabled, and
- improper communications with the Voltage Input Module.

When the voltage hardware fault trip conditions are satisfied, the:

- TRIP/WARN LED will flash a red 1 long and 1 short blink pattern,
- bit 1 in V Trip Status, Parameter 160, will set to “1”,
- bit 0 of Device Status, Parameter 21, will set to “1”,
- Trip Relay contact will be open, and
- outputs will be placed in their Protection Fault state (if so programmed).

Voltage Hardware Warning

The E3 Overload Relay will issue a warning with a Voltage Input Module Not Detected indication if:

- no warning currently exists,
- Voltage Hardware Fault warning is enabled, and
- improper communications with the Voltage Input Module.

When the voltage hardware fault warning conditions are satisfied, the:

TRIP/WARN LED will flash an amber 1 long and 1 short blink pattern,

bit 1 in V Warn Status, Parameter 161, will set to “1”, and

bit 1 of Device Status, Parameter 21, will set to “1”.

Real Power (kW) Protection

The E3 Plus Model EC5 has the capability to protect against real power (kW) for specific applications that require the monitoring of both voltage and current. The user can protect or issue a warning in the event that the real power (kW) consumption of an electric motor is either too high or too low.

Under Real Power Trip

The E3 Overload Relay will trip with an under real power indication if:

- no trip currently exists,
- Under Real Power protection is enabled,
- UW Inhibit Time has expired, and
- Total Real Power is equal to or less than UW Trip Level for a time period greater than the programmed UW Trip Delay.

When the under real power trip conditions are satisfied, the:

- TRIP/WARN LED will flash a red 2 long and 1 short blink pattern,
- bit 0 in PW Trip Status, Parameter 227, will set to “1”,
- bit 0 of Device Status, Parameter 21, will set to “1”,
- Trip Relay contact will be open, and
- outputs will be placed in their Protection Fault state (if so programmed).

UW Inhibit Time, Parameter 241, allows the installer to inhibit an under real power trip from occurring during the motor starting sequence and is adjustable from 0...250 seconds.

UW Trip Delay, Parameter 242, allows the installer to define the time period an under real power condition must be present before a trip occurs. It is adjustable from 0.1...25.0 seconds.

UW Trip Level, Parameter 243, allows the installer to define the total real power in which the E3 Plus Overload Relay will trip. It is adjustable from 0...32767.

Under Real Power Warning

The E3 Overload Relay will immediately indicate an under real power warning condition if:

- no warning currently exists,
- Under Real Power Warning is enabled,
- UW Inhibit Time has expired, and
- Total Real Power is equal to or less than the UW Warn Level.

When the under real power warning conditions are satisfied, the:

- TRIP/WARN LED will flash an amber 2 long and 1 short blink pattern,

- bit 0 in PW Warn Status, Parameter 228, will set to “1”, and
- bit 1 of Device Status, Parameter 21, will set to “1”.

UW Warn Level, Parameter 244, allows the installer to define the total real power in which the E3 Plus Overload Relay will indicate a warning and is adjustable from 0...32767.

Over Real Power Trip

The E3 Overload Relay will trip with an over real power indication if:

- no trip currently exists,
- Over Real Power protection is enabled,
- OW Inhibit Time has expired, and
- Total Real Power is equal to or greater than OW Trip Level for a time period greater than the programmed OW Trip Delay.

When the over real power trip conditions are satisfied, the:

- TRIP/WARN LED will flash a red 2 long and 2 short blink pattern,
- bit 1 in PW Trip Status, Parameter 227, will set to “1”,
- bit 0 of Device Status, Parameter 21, will set to “1”,
- Trip Relay contact will be open, and
- outputs will be placed in their Protection Fault state (if so programmed).

OW Inhibit Time, Parameter 245, allows the installer to inhibit an over real power trip from occurring during the motor starting sequence and is adjustable from 0...250 seconds.

OW Trip Delay, Parameter 246, allows the installer to define the time period an over real power condition must be present before a trip occurs. It is adjustable from 0.1...25.0 seconds.

OW Trip Level, Parameter 247, allows the installer to define the total real power in which the E3 Plus Overload Relay will trip. It is adjustable from 0...32767.

Over Real Power Warning

The E3 Overload Relay will immediately indicate an over real power warning condition if:

- no warning currently exists,
- Over Real Power Warning is enabled,
- OW Inhibit Time has expired, and
- Total Real Power is equal to or greater than the OW Warn Level.

When the over real power warning conditions are satisfied, the:

- TRIP/WARN LED will flash an amber 2 long and 2 short blink pattern,
- bit 1 in PW Warn Status, Parameter 228, will set to “1”, and
- bit 1 of Device Status, Parameter 21, will set to “1”.

OW Warn Level, Parameter 248, allows the installer to define the total real power in which the E3 Plus Overload Relay will indicate a warning and is adjustable from 0...32767.

Reactive Power (kVAR) Protection

The E3 Plus model EC5 has the capability to protect against reactive power (kVAR) for specific applications that require the monitoring of the reactive component of voltage and current. The user can protect or issue a warning in the event that the reactive power (kVAR) consumption or generation from an electric motor is either too high or too low. This protection can be used with synchronous motors or motors that have an active Power Factor correction capacitor.

Under Reactive Power Consumed Trip

The E3 Overload Relay will trip with an under reactive power consumed indication if:

no trip currently exists,

Under Reactive Power Consumed protection is enabled,

UVARC Inhibit Time has expired, and

Total Reactive Power is equal to or less than UVARC Trip Level for a time period greater than the programmed UVARC Trip Delay.

When the under real power trip conditions are satisfied, the:

TRIP/WARN LED will flash a red 2 long and 3 short blink pattern,

bit 2 in PW Trip Status, Parameter 227, will set to “1”,

bit 0 of Device Status, Parameter 21, will set to “1”,

Trip Relay contact will be open, and

outputs will be placed in their Protection Fault state (if so programmed).

UVARC Inhibit Time, Parameter 249, allows the installer to inhibit an under reactive power consumed trip from occurring during the motor starting sequence and is adjustable from 0...250 seconds.

UVARC Trip Delay, Parameter 250, allows the installer to define the time period an under reactive power consumed condition must be present before a trip occurs. It is adjustable from 0.1...25.0 seconds.

UVARC Trip Level, Parameter 251, allows the installer to define the total reactive power consumed in which the E3 Plus Overload Relay will trip. It is adjustable from 0...32767.

Under Reactive Power Consumed Warning

The E3 Overload Relay will immediately indicate an under reactive power consumed warning condition if:

- no warning currently exists,
- Under Reactive Power Consumed Warning is enabled,
- UVARC Inhibit Time has expired, and
- Total Reactive Power is equal to or less than the UVARC Warn Level.

When the under reactive power consumed warning conditions are satisfied, the:

TRIP/WARN LED will flash an amber 2 long and 3 short blink pattern,

bit 2 in PW Warn Status, Parameter 228, will set to “1”, and

bit 1 of Device Status, Parameter 21, will set to “1”.

UVARC Warn Level, Parameter 252, allows the installer to define the total reactive power consumed in which the E3 Plus Overload Relay will indicate a warning and is adjustable from 0...32767.

Over Reactive Power Consumed Trip

The E3 Overload Relay will trip with an over reactive consumed power indication if:

- no trip currently exists,
- Over Reactive Power Consumed protection is enabled,
- OVARC Inhibit Time has expired, and
- Total Reactive Power is equal to or greater than OVARC Trip Level for a time period greater than the programmed OVARC Trip Delay.

When the over reactive power consumed trip conditions are satisfied, the:

- TRIP/WARN LED will flash a red 2 long and 4 short blink pattern,
- bit 3 in PW Trip Status, Parameter 227, will go to “1”,
- bit 0 of Device Status, Parameter 21, will go to “1”,
- Trip Relay contact will be open, and

- outputs will be placed in their Protection Fault state (if so programmed).

OVARC Inhibit Time, Parameter 253, allows the installer to inhibit an over reactive power consumed trip from occurring during the motor starting sequence and is adjustable from 0...250 seconds.

OVARC Trip Delay, Parameter 254, allows the installer to define the time period an over reactive power consumed condition must be present before a trip occurs. It is adjustable from 0.1...25.0 seconds.

OVARC Trip Level, Parameter 255, allows the installer to define the total reactive power consumed in which the E3 Plus Overload Relay will trip. It is adjustable from 0...32767.

Over Reactive Power Consumed Warning

The E3 Overload Relay will immediately indicate an over real power warning condition if:

- no warning currently exists,
- Over Reactive Power Consumed Warning is enabled,
- OVARC Inhibit Time has expired, and
- Total Reactive Power is equal to or greater than the OVARC Warn Level.

When the over reactive power consumed warning conditions are satisfied, the:

- TRIP/WARN LED will flash an amber 2 long and 4 short blink pattern,
- bit 3 in PW Warn Status, Parameter 228, will set to “1”,
- bit 1 of Device Status, Parameter 21, will go set “1”

OVARC Warn Level, Parameter 256, allows the installer to define the total reactive power consumed in which the E3 Plus Overload Relay will indicate a warning and is adjustable from 0...32767.

Under Reactive Power Generated Trip

The E3 Overload Relay will trip with an under reactive power generated indication if:

- no trip currently exists,
- Under Reactive Power Generated protection is enabled,
- UVARG Inhibit Time has expired, and
- Total Reactive Power is equal to or less than UVARG Trip Level for a time period greater than the programmed UVARG Trip Delay.

When the under reactive power trip conditions are satisfied, the:

- TRIP/WARN LED will flash a red 2 long and 5 short blink pattern,

- bit 4 in PW Trip Status, Parameter 227, will set to “1”,
- bit 0 of Device Status, Parameter 21, will go to “1”,
- Trip Relay contact will be open, and
- outputs will be placed in their Protection Fault state (if so programmed).

UVARG Inhibit Time, Parameter 257, allows the installer to inhibit an under reactive power generated trip from occurring during the motor starting sequence and is adjustable from 0...250 seconds.

UVARG Trip Delay, Parameter 258, allows the installer to define the time period an under reactive power generated condition must be present before a trip occurs. It is adjustable from 0.1...25.0 seconds.

UVARG Trip Level, Parameter 259, allows the installer to define the total reactive power generated in which the E3 Plus Overload Relay will trip. It is adjustable from -32767 ...0.

Under Reactive Power Generated Warning

The E3 Overload Relay will immediately indicate an under reactive power generated warning condition if:

- no warning currently exists,
- Under Reactive Power generated Warning is enabled,
- UVARG Inhibit Time has expired, and
- Total Reactive Power is equal to or less than the UVARG Warn Level.

When the under reactive power generated warning conditions are satisfied, the following will occur:

- TRIP/WARN LED will flash an amber 2 long and 5 short blink pattern,
- bit 4 in PW Warn Status, Parameter 228, will set to “1”, and
- bit 1 of Device Status, Parameter 21, will set to “1”.

UVARG Warn Level, Parameter 260, allows the installer to define the total reactive power generated in which the E3 Plus Overload Relay will indicate a warning and is adjustable from -32767...0.

Over Reactive Power Generated Trip

The E3 Overload Relay will trip with an over reactive power generated indication if:

- no trip currently exists,
- Over Reactive Power Generated protection is enabled,
- OVARG Inhibit Time has expired, and

- Total Reactive Power is equal to or greater than OVARG Trip Level for a time period greater than the programmed OVARG Trip Delay.

When the over reactive power generated trip conditions are satisfied, the:

- bit 5 in PW Trip Status, Parameter 227, will set to "1",
- bit 0 of Device Status, Parameter 21, will set to "1",
- Trip relay contact will be open, and
- outputs will be placed in their Protection Fault state (if so programmed).

OVARG Inhibit Time, Parameter 261, allows the installer to inhibit an over reactive power generated trip from occurring during the motor starting sequence and is adjustable from 0...250 seconds.

OVARG Trip Delay, Parameter 262, allows the installer to define the time period an over reactive power generated condition must be present before a trip occurs. It is adjustable from 0.1...25.0 seconds.

OVARG Trip Level, Parameter 263, allows the installer to define the total reactive power generated in which the E3 Plus Overload Relay will trip. It is adjustable from -32767 ...0.

Over Reactive Power Generated Warning

The E3 Overload Relay will immediately indicate an over reactive generated power warning condition if:

- no warning currently exists,
- Over Reactive Power Generated Warning is enabled,
- OVARG Inhibit Time has expired, and
- Total Reactive Power is equal to or greater than the OVARG Warn Level.

When the over reactive power generated warning conditions are satisfied, the:

- TRIP/WARN LED will flash an amber 2 long and 6 short blink pattern,
- bit 5 in PW Warn Status, Parameter 228, will set to "1", and
- bit 1 of Device Status, Parameter 21, will set to "1".

OVARG Warn Level, Parameter 264, allows the installer to define the total reactive power generated in which the E3 Plus Overload Relay will indicate a warning and is adjustable from -32767...0.

Apparent Power (kVA) Protection

The E3 Plus Model EC5 has the capability to protect against apparent power (kVA) for specific applications that require the monitoring of both voltage and current. The user can protect or issue a warning in the event that the apparent power (kVA) consumption of an electric motor is either too high or too low.

Under Apparent Power Trip

The E3 Overload Relay will trip with an under apparent power indication if:

- no trip currently exists,
- Under Apparent Power protection is enabled,
- UVA Inhibit Time has expired, and
- Total Apparent Power is equal to or less than UVA Trip Level for a time period greater than the programmed UVA Trip Delay.

When the under apparent power trip conditions are satisfied, the:

- TRIP/WARN LED will flash a red 2 long and 7 short blink pattern,
- bit 6 in Parameter 227, PW Trip Status, will set to “1”,
- bit 0 of Parameter 21, Device Status, will set to “1”,
- Trip Relay contact will be open, and
- outputs will be placed in their Protection Fault state (if so programmed).

UVA Inhibit Time, Parameter 265, allows the installer to inhibit an under apparent power trip from occurring during the motor starting sequence and is adjustable from 0...250 seconds.

UVA Trip Delay, Parameter 266, allows the installer to define the time period an under apparent power condition must be present before a trip occurs. It is adjustable from 0.1...25.0 seconds.

UVA Trip Level, Parameter 267, allows the installer to define the total apparent power in which the E3 Plus Overload Relay will trip. It is adjustable from 0...32767.

Under Apparent Power Warning

The E3 Overload Relay will immediately indicate an under apparent power warning condition if:

- no warning currently exists,
- Under Apparent Power Warning is enabled,
- UVA Inhibit Time has expired, and
- Total Apparent Power is equal to or less than the UVA Warn Level.

When the under apparent power warning conditions are satisfied, the:

- TRIP/WARN LED will flash an amber 2 long and 7 short blink pattern,
- bit 6 in PW Warn Status, Parameter 228, will go to “1”, and
- bit 1 of Device Status, Parameter 21, will go to “1”.

UVA Warn Level, Parameter 268, allows the installer to define the total apparent power in which the E3 Plus Overload Relay will indicate a warning and is adjustable from 0...32767.

Over Apparent Power Trip

The E3 Overload Relay will trip with an over apparent power indication if:

- no trip currently exists,
- Over Apparent Power protection is enabled,
- OVA Inhibit Time has expired, and
- Total Apparent Power is equal to or greater than OVA Trip Level for a time period greater than the programmed OVA Trip Delay.

When the over apparent power trip conditions are satisfied, the:

- TRIP/WARN LED will flash a red 2 long and 8 short blink pattern,
- bit 7 in PW Trip Status, Parameter 227, will go to “1”,
- bit 0 of Device Status, Parameter 21, will go to “1”,
- Trip Relay contact will be open, and
- outputs will be placed in their Protection Fault state (if so programmed).

OVA Inhibit Time, Parameter 269, allows the installer to inhibit an over apparent power trip from occurring during the motor starting sequence and is adjustable from 0...250 seconds.

OVA Trip Delay, Parameter 270, allows the installer to define the time period an over apparent power condition must be present before a trip occurs. It is adjustable from 0.1...25.0 seconds.

OVA Trip Level, Parameter 271, allows the installer to define the total apparent power in which the E3 Plus Overload Relay will trip. It is adjustable from 0...32767.

Over Apparent Power Warning

The E3 Overload Relay will immediately indicate an over apparent power warning condition if:

- no warning currently exists,
- Over Apparent Power Warning is enabled,
- OVA Inhibit Time has expired, and
- Total Apparent Power is equal to or greater than the OVA Warn Level.

When the over apparent power warning conditions are satisfied, the:

- TRIP/WARN LED will flash an amber 2 long and 8 short blink pattern,

- bit 7 in PW Warn Status, Parameter 228, will go to “1”, and
- bit 1 of Device Status, Parameter 21, will go to “1”.

OVA Warn Level, Parameter 272, allows the installer to define the total apparent power in which the E3 Plus Overload Relay will indicate a warning and is adjustable from 0...32767.

Power Factor Protection

The E3 Plus model EC5 has the capability to protect against power factor (PF) for specific applications that require the monitoring the phase angle difference between voltage and current. The user can protect or issue a warning in the event that the power factor for an electric motor is either too high or too low for both leading and lagging applications.

Under Power Factor Lagging Trip

The E3 Overload Relay will trip with an under power factor lagging indication if:

- no trip currently exists,
- Under Power Factor Lagging protection is enabled,
- UPFLG Inhibit Time has expired, and
- Total PF is equal to or less than UPFLG Trip Level for a time period greater than the programmed UPFLG Trip Delay

When the under power factor lagging trip conditions are satisfied, the:

- TRIP/WARN LED will flash a red 2 long and 9 short blink pattern,
- bit 8 in PW Trip Status, Parameter 227, will set to “1”,
- bit 0 of Device Status, Parameter 21, will set to “1”,
- Trip Relay contact will be open, and
- outputs will be placed in their Protection Fault state (if so programmed).

UPFLG Inhibit Time, Parameter 273, allows the installer to inhibit an under power factor lagging trip from occurring during the motor starting sequence and is adjustable from 0...250 seconds.

UPFLG Trip Delay, Parameter 274, allows the installer to define the time period an under power factor lagging condition must be present before a trip occurs. It is adjustable from 0.1...25.0 seconds.

UPFLG Trip Level, Parameter 275, allows the installer to define the total power factor lagging in which the E3 Plus Overload Relay will trip. It is adjustable from 0...32767.

Under Power Factor Lagging Warning

The E3 Overload Relay will immediately indicate an under power factor lagging warning condition if:

- no warning currently exists,
- Under Power Factor Lagging Warning is enabled,
- UPFLG Inhibit Time has expired, and
- Total PF is equal to or less than the UPFLG Warn Level.

When the under power factor lagging warning conditions are satisfied, the:

- TRIP/WARN LED will flash an amber 2 long and 9 short blink pattern,
- bit 8 in PW Warn Status, Parameter 228, will go to "1", and
- bit 1 of Device Status, Parameter 21, will go to "1".

UPFLG Warn Level, Parameter 276, allows the installer to define the total power factor lagging in which the E3 Plus Overload Relay will indicate a warning and is adjustable from 0...32767.

Over Power Factor Lagging Trip

The E3 Overload Relay will trip with an over power factor lagging indication if:

- no trip currently exists,
- Over Power Factor Lagging protection is enabled,
- OPFLG Inhibit Time has expired, and
- Total PF is equal to or greater than OPFLG Trip Level for a time period greater than the programmed OPFLG Trip Delay.

When the over power factor lagging trip conditions are satisfied, the:

- TRIP/WARN LED will flash a red 2 long and 10 short blink pattern
- bit 9 in PW Trip Status, Parameter 227, will set to "1",
- bit 0 of Device Status, Parameter 21, will set to "1",
- Trip Relay contact will be open, and
- outputs will be placed in their Protection Fault state (if so programmed).

OPFLG Inhibit Time, Parameter 277, allows the installer to inhibit an over power factor lagging trip from occurring during the motor starting sequence and is adjustable from 0...250 seconds.

OPFLG Trip Delay, Parameter 278, allows the installer to define the time period an over power factor lagging condition must be present before a trip occurs. It is adjustable from 0.1...25.0 seconds.

OPFLG Trip Level, Parameter 279, allows the installer to define the total power factor lagging in which the E3 Plus Overload Relay will trip. It is adjustable from 0...32767.

Over Power Factor Lagging Warning

The E3 Overload Relay will immediately indicate an over power factor lagging warning condition if:

- no warning currently exists,
- Over Power Factor Lagging Warning is enabled,
- OPFLG Inhibit Time has expired, and
- Total PF is equal to or greater than the OPFLG Warn Level.

When the over power factor lagging warning conditions are satisfied, the:

- TRIP/WARN LED will flash an amber 2 long and 10 short blink pattern,
- bit 9 in PW Warn Status, Parameter 228, will go to “1”, and
- bit 1 of Device Status, Parameter 21, will go to “1”.

OPFLG Warn Level, Parameter 280, allows the installer to define the total power factor lagging in which the E3 Plus Overload Relay will indicate a warning and is adjustable from 0...32767.

Under Power Factor Leading Trip

The E3 Overload Relay will trip with an under power factor leading indication if:

No trip currently exists

Under Power Factor Leading protection is enabled

UPFLD Inhibit Time has expired

Total PF is equal to or less than UPFLD Trip Level for a time period greater than the programmed UPFLD Trip Delay

When the under power factor leading trip conditions are satisfied, the:

- TRIP/WARN LED will flash a red 2 long and 11 short blink pattern,
- bit 10 in PW Trip Status, Parameter 227, will set to “1”,
- bit 0 of Device Status, Parameter 21, will set to “1”,
- Trip Relay contact will be open, and
- outputs will be placed in their Protection Fault state (if so programmed).

UPFLD Inhibit Time, Parameter 281, allows the installer to inhibit an under power factor leading trip from occurring during the motor starting sequence and is adjustable from 0...250 seconds.

UPFLD Trip Delay, Parameter 282, allows the installer to define the time period an under power factor leading condition must be present before a trip occurs. It is adjustable from 0.1...25.0 seconds.

UPFLD Trip Level, Parameter 283, allows the installer to define the total power factor leading in which the E3 Plus Overload Relay will trip. It is adjustable from 0...32767.

Under Power Factor Leading Warning

The E3 Overload Relay will immediately indicate an under power factor leading warning condition if:

- no warning currently exists,
- Under Power Factor Leading Warning is enabled,
- UPFLD Inhibit Time has expired, and
- Total PF is equal to or less than the UPFLD Warn Level.

When the under power factor leading warning conditions are satisfied, the:

- TRIP/WARN LED will flash an amber 2 long and 11 short blink pattern,
- bit 10 in PW Warn Status, Parameter 228, will set to “1”, and
- bit 1 of Device Status, Parameter 21, will set to “1”.

UPFLD Warn Level, Parameter 284, allows the installer to define the total power factor leading in which the E3 Plus Overload Relay will indicate a warning and is adjustable from 0...32767.

Over Power Factor Leading Trip

The E3 Overload Relay will trip with an over power factor leading indication if:

no trip currently exists,

Over Power Factor Leading protection is enabled,

OPFLD Inhibit Time has expired, and

Total PF is equal to or greater than OPFLD Trip Level for a time period greater than the programmed OPFLD Trip Delay.

When the over power factor leading trip conditions are satisfied, the:

- TRIP/WARN LED will flash a red 2 long and 12 short blink pattern,

- bit 11 in Parameter 227, PW Trip Status, will set to “1”,
- bit 0 of Parameter 21, Device Status, will set to “1”,
- Trip Relay contact will be open, and
- The outputs will be placed in their Protection Fault state (if so programmed).

OPFLD Inhibit Time, Parameter 285, allows the installer to inhibit an over power factor leading trip from occurring during the motor starting sequence and is adjustable from 0...250 seconds.

OPFLD Trip Delay, Parameter 286, allows the installer to define the time period an over power factor leading condition must be present before a trip occurs. It is adjustable from 0.1...25.0 seconds.

OPFLD Trip Level, Parameter 287, allows the installer to define the total power factor leading in which the E3 Plus Overload Relay will trip. It is adjustable from 0...32767.

Over Power Factor Leading Warning

The E3 Overload Relay will immediately indicate an over power factor leading warning condition if:

- no warning currently exists,
- Over Power Factor Leading Warning is enabled,
- OPFLD Inhibit Time has expired, and
- Total PF is equal to or greater than the OPFLD Warn Level.

When the over power factor leading warning conditions are satisfied, the:

- TRIP/WARN LED will flash an amber 2 long and 12 short blink pattern,
- bit 11 in PW Warn Status, Parameter 228, will set to “1”, and
- bit 1 of Device Status, Parameter 21, will set to “1”.

OPFLD Warn Level, Parameter 288, allows the installer to define the total power factor leading in which the E3 Plus Overload Relay will indicate a warning and is adjustable from 0...32767.

Protective Trip & Warning Summary

The following tables provide a summary of protective trips and protective warnings.

Table 22 - Protective Trip Summary

Function	Factory Default	Trip Level Range	Trip Level Default	Trip Delay Range	Trip Delay Default	Inhibit Time ❶ Range	Inhibit Time ❶ Default
Overload	Enabled	❷		Trip Class 5…30	Trip Class 10		
Phase Loss		❸		0.1…25.0 s	1.0 s	0…250 s	0 s
Ground Fault (193/592-EC2)	Disabled	Internal 1…5 A	2.5 A	0.0…25.0 s	0.5 s	0…250 s	10 s
Ground Fault (193/592-EC3)		External 0.02…5 A ❹	2.5 A	0.0…25.0 s	0.5 s	0…250 s	10 s
Stall		100…600% ❺	600% ❺	0…250 s ❺	10 s ❺		
Jam		50…600%	250%	0.1…25.0 s	5.0 s	0…250 s	10 s
Underload		10…100% FLA ❻	50%	0.1…25.0 s	5.0 s	0…250 s	10 s
PTC							
Current Imbalance		10…100%	35%	0.1…25.0 s	5.0 s	0…250 s	10 s
Comm Fault	Enabled						
Comm Idle	Disabled						
Remote Trip							
Voltage Input Module Hardware Fault ❼							
Undervoltage L-L ❼		0...65535	100	0.1…25.0 s	1.0 s	0…250 s	10 s
Overvoltage L-L ❼		0...65535	500				
Voltage Unbalance ❼		0…100	75				
Phase Rotation ❼		1…2	1				
Under Frequency ❼		0…250	57	0.1…25.0 s	1.0 s		
Over Frequency ❼		0…250	63				
Under Real Power ❼		0…32767					
Over Real Power ❼							
Under Consumed kVAR ❼							
Over Consumed kVAR ❼							
Under Generated kVAR ❼		-32767…0					
Over Generated kVAR ❼		-32767…0					
Under Power kVA ❼		0…32767					
Over Power kVA ❼		0…32767					
Under Power Factor Lagging ❼		-100…0	-90				
Over Power Factor Lagging ❼		-100…0	-95				
Under Power Factor Leading ❼		0...100	90				
Over Power Factor Leading ❼		0...100	95				

❶ The inhibit time setting parameters are applicable to both the trip and warning functions.
❷ FLA Setting range and default values are dependent upon the current rating of the product. See the user manual for more information.
❸ Phase loss trip level is factory-set at a current imbalance greater than or equal to 100% and is not user-adjustable.
❹ Must use Ground Fault Sensors (Catalog Number 193-CBCT_).
❺ Stall protection is only applicable during the motor starting sequence. If any phase of current falls below the programmed Stall Trip Level, stall protection is disabled.
❻ 50…100% for devices with FRN 1.003 and earlier.
❼ Available on 193/592-EC5 only.

Table 23 - Protective Warning Summary

Function	Factory Default	Warning Level		Inhibit Time ❶	
		Range	Default	Range	Default
Overload	Disabled	0…100% ❷	85%		
Phase Loss					
Ground Fault (193/592-EC2)	Disabled	Internal 1…5 A	2.0 A	0…250 s	10 s
Ground Fault (193/592-EC3)		External 0.02…5 A ❸			
Stall					
Jam	Disabled	50…600%	150%	0…250 s	10 s
Underload		10…100% ❹	70%		
Thermistor (PTC)					
Current Imbalance		10…100%	20%	0…250 s	10 s
Comm Fault					
Comm Idle					
Voltage Input Module Hardware Fault ❺	Enabled				
Under Voltage L-L ❺	Disabled	0...65535	400	0…250 s	10 s
Over Voltage L-L ❺					
Voltage Unbalance ❺		0…100	85		
Phase Rotation ❺		1…2	1		
Under Frequency ❺		0…250	58		
Over Frequency ❺			62		
Under Real Power ❺		0…32767			
Over Real Power ❺					
Under Consumed kVAR ❺					
Over Consumed kVAR ❺					
Under Generated kVAR ❺		-32767…0			
Over Generated kVAR ❺					
Under Power kVA ❺		0…32767			
Over Power kVA ❺					
Under Power Factor Lagging ❺		-100…0	-95		
Over Power Factor Lagging ❺			-90		
Under Power Factor Leading ❺		0...100	95		
Over Power Factor Leading ❺			90		

❶ The inhibit time setting parameters are applicable to both the trip and warning functions.
❷ Overload warning setting is entered as a percentage of the thermal capacity utilized.
❸ Must use Ground Fault Sensors (Catalog Number 193-CBCT_).
❹ 50…100% for devices with FRN 1.003 and earlier.
❺ Available on 193/592-EC5 only.

Preventive Maintenance Diagnostics (E3 Overload Relays Series C & Later)

The purpose of this section is to provide detailed information regarding the Preventive Maintenance Diagnostic functions of the E3 Overload Relays Series C and Later. In this section programming and monitoring parameters as they relate to these functions will be discussed. For complete descriptions of the programming parameters, Refer to Programmable Parameters on page 105.

Monitoring

Elapsed Time, Parameter 95, logs the hours of motor operation — the time period that the E3 Overload Relay is sensing motor current present (must be greater than 30% of the minimum Full Load Current (FLA) setting).

Starts Counter, Parameter 96, logs the number of starts — the number of times motor current transitions from zero to a reported non-zero value (motor current must be greater than 30% of the minimum Full Load Current (FLA) setting).

IMPORTANT The E3 Overload Relay will report 0 A or 0% FLA if the current is below 30% of the minimum FLA setting.

Start Inhibit

This protective function allows the installer to limit the number of starts in a given time period. A start is defined as the E3 Overload Relay sensing a transition in current from zero to a reported non-zero value (motor current must be greater than 30% of the minimum Full Load Current (FLA) setting). The Start Inhibit protective function can be set by: Starts/Hour and/or Starts Interval.

Start Inhibit Trip

The E3 Overload Relay will trip with a Blocked Start indication upon motor stopping when:

- no trip currently exists,
- Start Inhibit is enabled,
- the number of starts count within the past hour period equals the value set in the Starts/Hour parameter, or
- the time expired since the most recent start is less than the value set in the Starts Interval parameter.

If the E3 Overload Relay trips on a Blocked Start, the:

- TRIP/WARN LED will flash a red 16-blink pattern,
- bit 15 in Trip Status, Parameter 14, will set to “1”,
- bit 0 in Device Status, Parameter 21, will set to “1”,
- Trip Relay contact will be open, and

- outputs will be placed in their Protection Fault state (if so programmed).

IMPORTANT The Protection Fault State of OUT A and OUT B is defined by:
- OUTA Pr FltState, Parameter 65
- OUTA Pr FltValue, Parameter 66
- OUTB Pr FltState, Parameter 71
- OUTB Pr FltValue, Parameter 72

Starts/Hour, Parameter 99, allows the installer to limit the number of starts per hour. It is adjustable from 1...120.

Starts Interval, Parameter 100, allows the installer to limit the time between starts. It is adjustable from 0...3600 seconds.

Starts Available, Parameter 97, reports the number of starts currently available based on the Start Inhibit settings and the actual motor starting events.

Time to Start, Parameter 98, reports the amount of the time remaining until a new start can be effected. If the Time to Start time has elapsed, it will report zero until the next Blocked Start trip occurs.

Preventive Maintenance Flags

The E3 Overload Relay offers preventive maintenance flags in the Warning Status parameter based on the number of start cycles or the number of operating hours (motor current must be greater than 30% of the minimum Full Load Current (FLA) setting). These can be used to send the user a warning message that the number of starts or number of operating hours has been reached and that it is time to perform preventive maintenance. The preventive maintenance warning function can be set by PM - # Starts and/or PM – Oper. Hours.

IMPORTANT The E3 Overload Relay will report 0 A or 0% FLA if the current is below 30% of the minimum FLA setting.

PM - # Starts, Parameter 101, allows the installer to set a number of starts. It is adjustable from 0...65,535.

The E3 Overload Relay will give a PM - # Starts warning indication when:
- PM - # Starts warning is enabled and
- Starts Counter parameter is equal to or greater than the value set in the PM - # Starts parameter.

Upon a PM - # Starts warning, the:
- TRIP/WARN LED will flash an amber 14-blink pattern,
- bit 13 in Warning Status, Parameter 15, will set to “1”, and
- bit 1 in Device Status, Parameter 21, will set to “1”.

PM – Oper. Hours, Parameter 102, allows the installer to set a number of hours of operation. It is adjustable from 0...65,565 hours.

The E3 Overload Relay will give a PM – Oper. Hours warning indication when:

- PM – Oper. Hours warning is enabled, and
- Elapsed Time parameter is equal to or greater than the value set in the PM – Oper. Hours parameter.

Upon a PM – Oper. Hours warning, the:

- TRIP/WARN LED will flash an amber 15-blink pattern,
- bit 14 in Warning Status, Parameter 15, will set to “1”, and
- bit 1 in Device Status, Parameter 21, will set to “1”.

Queue Clearing

Using the Clear Queue, Parameter 104, the E3 Overload Relay provides the capability to simultaneously clear/reset the:

- Trip Logs, Parameters 16...20,
- Warning Logs, Parameters 90...94,
- Starts Counter, Parameter 96, and the
- Elapsed Time Parameter 95.

If using the Preventative Maintenance Flags, the user will want to reset the Starts Count and Elapsed Time after preventative maintenance has been performed.

DeviceNet™ Node Commissioning

IMPORTANT The following recommendations are intended to ensure a trouble-free startup and operation:

- Use the node commissioning tool in RSNetWorx™ or the E3 programming and control terminal when modifying the E3 Overload Relay's node address. **Do not** use the "General" tab found in the product window in RSNetWorx. The node commissioning tool ensures that the device goes through a hard reset and requires the user to upload the most current parameter information from the device prior to making configuration changes.
- Ensure that you have the most current configuration information prior to saving a RSNetWorx configuration file.
- If you intend to employ the automatic device recovery (ADR) function of the DeviceNet scanner, ensure that the device configuration is as you intend it **before** saving to memory.
- Be aware that the "Restore Device Defaults" button in RSNetWorx will reset the E3 Overload Relay's node address setting to 63. For Series B and later devices, the hardware node address switches take precedence over the software node address setting.

Introduction

E3 Overload Relays are shipped with a default software node address (MAC ID) setting of 63 and the data rate set to Autobaud. Each device on a DeviceNet network must have a unique node address which can be set to a value from 0 to 63. Keep in mind that most DeviceNet systems use address 0 for the master device (Scanner) and node address 63 should be left vacant for introduction of new slave devices. The node address and data rate for Series B and later E3 Overload Relays can be changed using software or by setting the hardware switches that reside on the front of each unit. While both methods yield the same result, it is a good practice to choose one method and deploy it throughout the system.

Setting the Hardware Switches (Series B & Later)

Use the following steps to commission the card.

1. Set the node address switches. Use the table below to assist you.

Table 24 - Node Address Settings

Node Address Switches	Node Address Setting	Determined By:
MSD 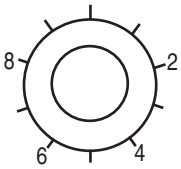	0…63	the switch values when set in this range.
	64…99	the software setting using the RSNetWorx for DeviceNet configuration tool.
LSD 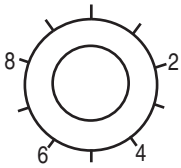	99	99 is the default factory setting.

IMPORTANT Resetting an E3 Overload Relay to factory default values will also effect the node address setting for node address switch settings of 64 to 99.

2. For node address switch values in the range of 0 to 63, cycle power to the E3 Overload Relay to initialize the new setting.

Using RSNetWorx for DeviceNet

Follow these additional steps for node address switch settings in the range of 64...99. To begin the configuration of an E3 Overload Relay using software, execute the RSNetWorx software and complete the following procedure. You must use RSNetWorx Revision 3.21 Service Pack 2 or later.

Recognizing the E3 Overload Relay Online

1. Launch the RSNetWorx software, then select Online from the Network drop-down menu.
2. Select the appropriate DeviceNet PC interface, then click OK.

   TIP DeviceNet drivers must be configured using RSLinx prior to being available to RSNetWorx.

3. If the RSNetWorx software gives notification to upload or download devices before viewing configuration, click OK to upload or download these devices.
4. RSNetWorx now browses the network and displays all of the nodes it has detected on the network. For some versions of RSNetWorx software, the E3 Overload Relay Series B and Later EDS files may not be included. In this event, the device will be identified as an “Unrecognized Device”.

TIP If the screen appears as shown below, continue with Building and Registering an EDS file.

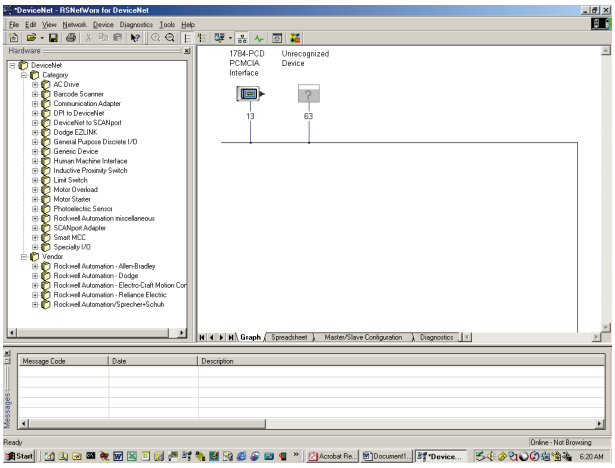

5. If RSNetWorx software recognizes the device as an E3 Overload Relay, skip ahead to the following section – Using the Node Commissioning Tool of RSNetWorx for DeviceNet.

TIP Node Commissioning can also be accomplished by using the DeviceNet Configuration Terminal, Cat. No. 193-DNCT.

Building and Registering an EDS File

The EDS file defines how RSNetWorx for DeviceNet will communicate to the E3 Overload Relay. The EDS file can be created over the DeviceNet network or downloaded from the Internet.

NOTE: If you are using DeviceLogix functionality, you must download the EDS file from www.ab.com/networks/eds.

Perform the following steps to build and register the EDS file.

1. Right-click the Unrecognized Device icon. The Register Device menu appears.
2. Select Yes. The EDS Wizard will appear.
3. Select Next, then Create an ESD File.
4. Select Next.
5. Select Upload EDS.
6. Select Next. The EDS Wizard screen appears:.

7. OPTIONAL STEP: Type a value in the Catalog and File Description Text fields., then select Next.

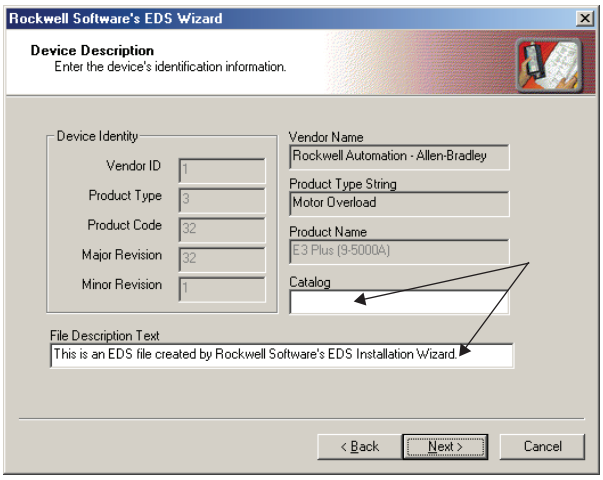

8. On the Input/Output Screen in the EDS Wizard, select the Polled checkbox, then enter a value of 8 for Input and 1 for output as shown below.

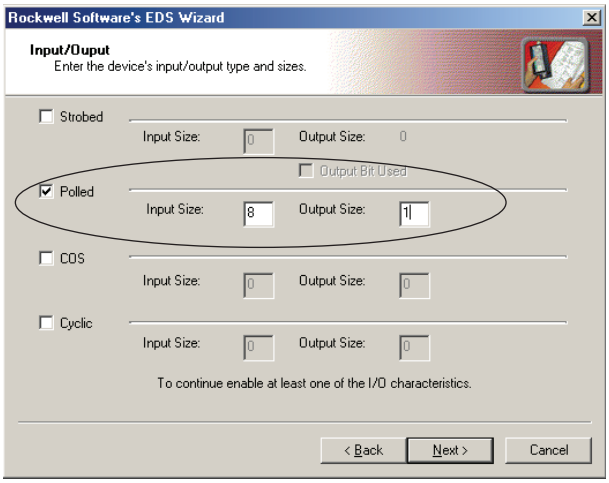

9. Select Next. The RSNetWorx will upload the EDS file from the E3 Overload Relay.

10. Select Next to display the icon options for the node.

11. Select the E3 Overload Relay icon, then click Change Icon.

12. Select OK after selecting the desired icon.

13. Select Next.

14. Select Next when prompted to register this device.

15. Select Finish.

After a short time, the RSNetWorx software updates the online screen by replacing Unrecognized Device with the name and icon given by the EDS file that you have just registered.

Using the Node Commissioning Tool of RSNetWorx for DeviceNet

1. Select Node Commissioning from the Tools drop-down menu.
2. Select Browse.
3. Select the E3 Overload Relay located at node 63.

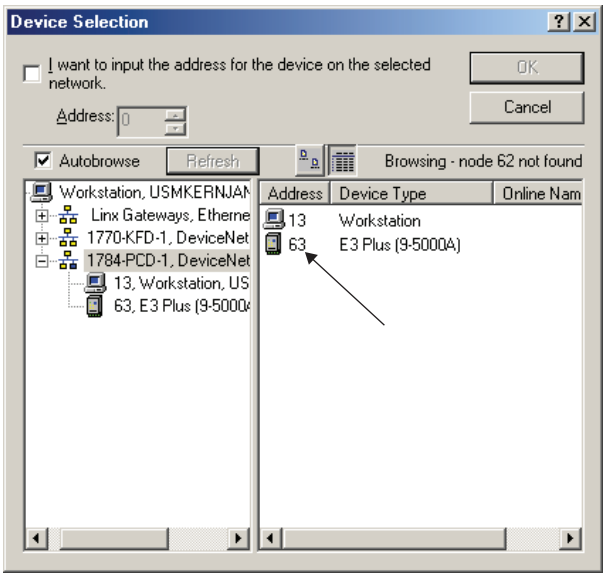

4. Select OK.

NOTE: The Node Commissioning screen shows Current Device Settings entries completed. It will also provide the current network baud rate in the New E3 Overload Relay Settings area. **Do not change the baud rate setting unless you are sure it must be changed.**

5. Type the node address that you want in the New Device Settings section. In this example, the new node address is 5.

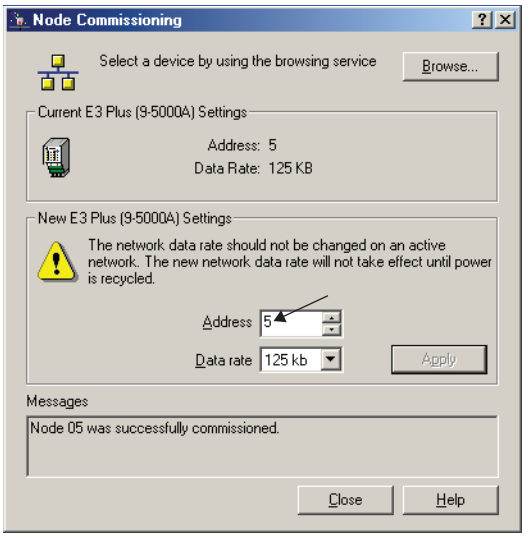

6. Select Apply.

NOTE: When the new node address has been successfully applied, the Current Device Settings section of the window is updated (see the example below). If an error occurs, check to see if the device is properly powered up and connected to the network.

7. Select Exit to close the Node Commissioning window.

8. Select Single Pass Browse from the Network drop-down menu to update the RSNetWorx software and verify that the node address is set correctly.

Produced and Consumed Assembly Configuration

The Input and Output Assembly format for the E3 Overload Relay is identified by the value in Output Assembly, Parameter 59, and Input Assembly, Parameter 60. These values determine the amount and arrangement of the information communicated to the master scanner.

Figure 34 - I/O Assembly Settings

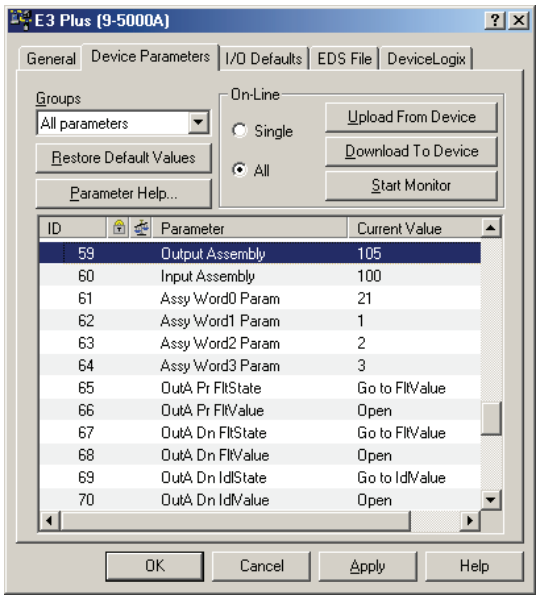

Selection of Input and Output Assemblies (a.k., Produced and Consumed Assemblies) define the format of I/O message data that is exchanged between the E3 Overload Relay and other devices on the network. The consumed information is generally used to command the state of the slave device's outputs, and produced information typically contains the state of the inputs and the current fault status of the slave device.

The default Consumed and Produced Assemblies are shown in the tables below. For additional formats, refer to Appendix B.

Table 25 - Instance 100 Parameter Based Input Assembly

Byte	Words	Value of Parameter Pointed to by Parameter
0	0	#61 Low Byte
1		#61 High Byte
2	1	#62 Low Byte
3		#62 High Byte
4	2	#63 Low Byte
5		#63 High Byte
6	3	#64 Low Byte
7		#64 High Byte

Table 26 - Default Output Assemblies

Byte	Bit 7	Bit 6	Bit 5	Bit 4	Bit 3	Bit 2	Bit 1	Bit 0
Instance 103 E3								
0			Remote Trip ❶			Fault Reset		Out A
Instance 103 E3 Plus								
0			Remote Trip ❶			Fault Reset	Out B	Out A
❶ Series C and later.								

Choosing the size and format of the I/O data that is exchanged by the E3 Overload Relay is done by selecting Input and Output Assembly instance numbers. Each assembly has a given size (in bytes). This instance number is written to the Input Assembly and Output Assembly parameters. The different instances/formats allow for user programming flexibility and network optimization.

IMPORTANT The Output Assembly and Input Assembly parameter values **cannot** be changed while the E3 Overload Relay is online with a scanner. Any attempts to change the value of this parameter while online with a scanner will result in the error message "Object State Conflict".

Mapping the Scanner to the Scan List

The Automap feature available in all Rockwell Automation scanners automatically maps the information. If the default I/O assemblies are not used, the values must be changed in the scan list.

1. Select Edit I/O Parameters from the Scan List tab of the scanner. The following window appears.

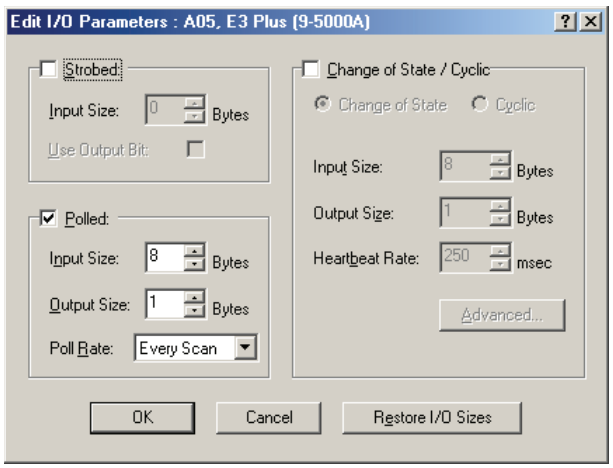

2. Change the default I/O assemblies in the Polled section of the window, then select OK.

Commissioning the Protection Functions

This section describes the use of RSNetWorx for DeviceNet to configure the function settings of the E3 Overload Relays. The product should now be configured and communicating on the network. The last step is to program the motor FLA Setting, Parameter# 28, and additional setting per the application requirements. This can be accomplished by using software such as RSNetWorx for DeviceNet or another handheld DeviceNet tool.

1. Using the RSNetWorx software, access the Device Parameters tab. The following window appears.

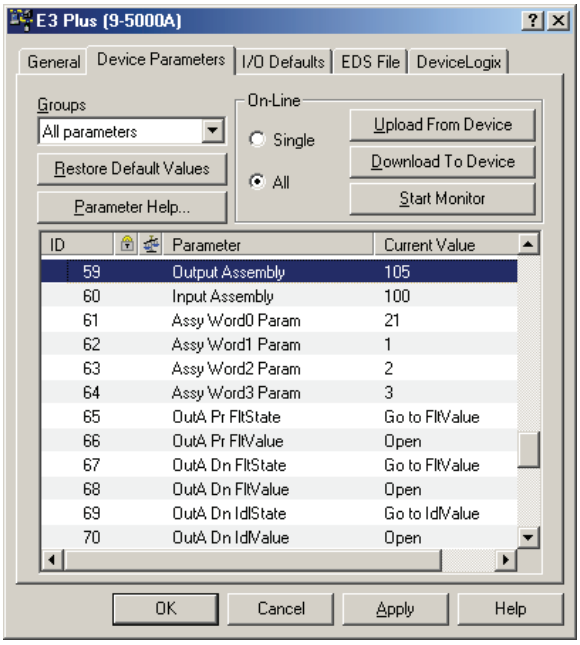

2. Type the desired setting values corresponding to the motor connected to the E3 Overload Relay.
3. Make sure the **Single** radio button is selected within On-Line, then select Download to Device.

Programmable Parameters

Introduction

This chapter describes each programmable parameter and its function.

Programming

Refer to Chapter 4 for instructions in using RS NetWorx for DeviceNet to modify parameter settings and Input and Output Assemblies.

IMPORTANT	Parameter setting changes downloaded to the E3 Overload Relay take effect immediately, even during a "running" status.

IMPORTANT	Parameter setting changes made in a configuration tool, (e.g., RSNetWorx for DeviceNet) do not take effect in the E3 Overload Relay until the installer applies or downloads the new settings to the device.

Program Lock

Program Lock, Parameter 53, provides a degree of security from having parameter settings unintentionally altered when programmed to the "locked" setting.

Reset to Default Factory Settings

Set to Defaults, Parameter 54, allows the installer to reset all parameter settings (including trip logs) to the factory default values.

IMPORTANT	Resetting to factory default values also resets the E3 Overload Relay's DeviceNet node address (MAC ID) to the default value of 63.

Parameter Group Listing

The E3 Overload Relay can contain up to 13 parameter groups, depending on the model number and firmware revision. In this chapter, the following parameter groups will be discussed:

- Monitor Group
- Overload Setup
- Reset/Lock Groups
- Advanced Setup
- DeviceNet Setup
- Output Setup
- DeviceLogix Setup

Additional information on select parameter groups may be found in the upcoming chapters, as listed below.

- Monitor Group, Chapter 6
- Voltage Setup, Chapter 7
- Power Setup, Chapter 8
- Trip History, Chapter 9
- Snapshot Group, Chapter 9

Table 27 - Monitor Group

Parameter Number	Description	Parameter Number	Description
1	L1 Current	17	Trip Log 1
2	L2 Current	18	Trip Log 2
3	L3 Current	19	Trip Log 3
4	Average Current	20	Trip Log 4
5	L1 % FLA	21	Device Status
6	L2 % FLA	22	Firmware
7	L3 % FLA	23	Device Configuration
8	Average % FLA	90	Warning Log 0 ❶
9	% Therm Utilized	91	Warning Log 1 ❶
10	GF Current	92	Warning Log 2 ❶
11	Current Imbalance	93	Warning Log 3 ❶
12	OL Time to Trip	94	Warning Log 4 ❶
13	OL Time to Reset	95	Elapsed Time ❶
14	Trip Status	96	Starts Counter ❶
15	Warning Status	97	Starts Available ❶
16	Trip Log 0	98	Time to Start ❶
❶ Series C (FRN 4.00 and higher)			

Table 28 - Overload Setup

Parameter Number	Description	Parameter Number	Description
27	Single/Three Phase	30	OL /PTC Reset Mode
28	FLA Setting	31	OL Reset Ratio
29	Trip Class	78	CT Ratio

Table 29 - Reset/Lock Group

Parameter Number	Description	Parameter Number	Description
26	Trip Reset	294	Reset kVARh ❷
53	Program Lock	295	Reset kVAh ❷
54	Set to Defaults	296	Reset Max kW Dmnd ❷
103	Test Enable ❶	297	Reset Max kVAR Dmnd ❷
104	Clear Queue ❶	298	Reset Max kVA Dmnd ❷
293	Reset kWh ❷		
❶ Series C (FRN 4.00 and higher) ❷ Catalog Numbers 193/592-EC5 only			

Table 30 - Advanced Setup

Parameter Number	Description	Parameter Number	Description
24	Trip Enable	46	UL Trip Delay
25	Warning Enable	47	UL Trip Level
27	Single/Three Phase	48	UL Warn Level
28	FLA Setting	49	CL Inhibit Time
29	Trip Class	50	CL Trip Delay
30	OL/PTC Reset Mode	51	CL Trip Level
31	OL Reset Level	52	CL Warn Level
32	OL Warning Level	78	CT Ratio
33	PL Inhibit Time	83	IN 1 Assignment
34	PL Trip Delay	84	IN 2 Assignment
35	GF Inhibit Time	85	IN 3 Assignment
36	GF Trip Delay	86	IN 4 Assignment
37	GF Trip Level	87	2 Speed Net Enable
38	GF Warn Level	88	3-Speed Net Enable
39	Stall Enabled Time	89	GF Trip Inhibit
40	Stall Trip Level	99	Starts/Hour ❶
41	Jam Inhibit Time	100	Starts Interval ❶
42	Jam Trip Delay	101	PM - # Starts ❶
43	Jam Trip Level	102	PM - Operation Hours ❶
44	Jam Warn Level	105	GF Warn Delay ❶
45	UL Inhibit Time	106	GF Sensing Range ❶
❶ Series C (FRN 4.00 and higher)			

Table 31 - DeviceNet Setup

Parameter Number	Description	Parameter Number	Description
55	AutoBaud Enable	61	Assembly Word 0 Parameter
56	NonVol Baud Rate	62	Assembly Word 1 Parameter
58	COS Mask	63	Assembly Word 2 Parameter
59	Output Assembly	64	Assembly Word 3 Parameter
60	Input Assembly		

Table 32 - Output Setup

Parameter Number	Description	Parameter Number	Description
65	OutA Pr Flt State	71	OutB Pr Flt State
66	OutA Pr Flt Value	72	OutB Pr Flt Value
67	OutA Pr DN State	73	OutB Pr DN State
68	OutA Pr DN Value	74	OutB Pr DN Value
69	OutA Pr IdlState	75	OutB Pr IdlState
70	OutA Pr Idl Value	76	OutB Pr Idl Value

Table 33 - DeviceLogix Group

Parameter Number	Description	Parameter Number	Description
79	Comm Override	81	Net Outputs
80	Network Override	82	Net Out COS Mask

Table 34 - Trip Warning History Group ❶

Parameter Number	Description	Parameter Number	Description
132	Trip History 0	140	Warn History 3
133	Trip History 1	141	Warn History 4
134	Trip History 2	142	Trip History Mask
135	Trip History 3	143	Warn History Mask
136	Trip History 4	299	V Trip History Mask
137	Warn History 0	300	V Trip Warning History Mask
138	Warn History 1	301	PW Trip History Mask
139	Warn History 2	302	PW Warning History Mask

❶ Series C (FRN 5.00 and higher)

Table 35 - Trip Snapshot ❶

Parameter Number	Description	Parameter Number	Description
144	SS L1 Current	150	SS L2-L3Voltage
145	SS L2 Current	151	SS L3-L1 Voltage
146	SS L3 Current	152	SS Total Real Power
147	SS %TCU	153	SS Total kVAR
148	SS GF Current	154	SS Total kVA
149	SS L1-L2 Voltage	155	SS Total PF
❶ Series C (FRN 5.00 and higher)			

Table 36 - Voltage Monitor ❶

Parameter Number	Description	Parameter Number	Description
160	V Trip Status	167	L2-N Voltage
161	V Warn Status	168	L3-N Voltage
162	L1-L2 Voltage	169	Ave Voltage L-N
163	L2-L3 Voltage	170	Voltage Unbalance
164	L3-L1 Voltage	171	Voltage Frequency
165	Ave Voltage L-L	172	V Phase Rot
166	L1-N Voltage		
❶ 193/592-EC5 only			

Table 37 - Voltage Setup ❶

Parameter Number	Description	Parameter Number	Description
156	Volt Mode	230	V Unbal Trip Delay
158	V Trip Enable	231	V Unbal Trip Level
159	V Warn Enable	232	V Unbal Warn Level
215	UV Inhibit Time	233	UF Inhibit Time
216	UV Trip Delay	234	UF Trip Delay
217	UV Trip Level	235	UF Trip Level
218	UV Warn Level	236	UF Warn Level
219	OV Inhibit Time	237	OF Inhibit Time
220	OV Trip Delay	238	OF Trip Delay
221	OV Trip Level	239	OF Trip Level
222	OV Warn Level	240	OF TWarn Level
223	Ph Rot Inhibit Time	289	PT Pri
224	Ph Rot Trip	290	PT Sec
229	V Unbal Inhibit Time		
❶ 193/592-EC5 only			

Table 38 - Power Monitor ❶

Parameter Number	Description	Parameter Number	Description
173	L1 Real Power	195	kVARh Con 10E0
174	L2 Real Power	196	kVARh Con 10E-3
175	L3 Real Power	197	kVARh Gen 10E6
176	Total Real Power	198	kVARh Gen 10E3
177	L1 Reactive Power	199	kVARh Gen 10E0
178	L2 Reactive Power	200	kVARh Gen 10E-3
179	L3 Reactive Power	201	kVARh Net 10E6
180	Total Reactive Power	202	kVARh Net 10E3
181	L1 Apparent Power	203	kVARh Net 10E0
182	L2 Apparent Power	204	kVARh Net 10E-3
183	L3 Apparent Power	205	kVAh 10E6
184	Total Apparent Power	206	kVAh 10E3
185	L1 PF	207	kVAh 10E0
186	L2 PF	208	kVAh 10E-3
187	L3 PF	209	kW Demand
188	Total PF	210	Max kW Demand
189	kWh 10E6	211	VAR Demand
190	kWh 10E3	212	Max VAR Demand
191	kWh 10E0	213	VA Demand
192	kWh 10E-3	214	Max VA Demand
193	kVARh Con 10E6	227	PW Trip Status
194	kVARh Con 10E3	228	PW Warn Status

❶ 193/592-EC5 only

Table 39 - Power Setup ❶

Parameter Number	Description	Parameter Number	Description
157	Power Scale	265	UVA Inibit Time
225	PW Trip Enable	266	UVA Trip Delay
226	PW Warn Enable	267	UVA Trip Level
241	UW Inhibit Time	268	UVA Warn Level
242	UW Trip Delay	269	OVA Inhibit Time
243	UW Trip Level	270	OVA Trip Delay
244	UW Warn Level	271	OVA Trip Level
245	OW Inhibit Time	272	OVA Warn Level
246	OW Trip Delay	273	UPFLG Inhibit Time
247	OW Trip Level	274	UPFLG Trip Delay
248	OW Warn Level	275	UPFLG Trip Level
249	UVARC Inhibit Time	276	UPFLG Warn Level
250	UVARC Trip Delay	277	OPFLG Inhibit Time
251	UVARC Trip Level	278	OPFLG Trip Delay
252	UVARC Warn Level	279	OPFLG Trip Level
253	OVARC Inhibit Time	280	OPFLG Warn Level
254	OVARC Trip Delay	281	UPFLD Inhibit Time
255	OVARC Trip Level	282	UPFLD Trip Delay
256	OVARC Warn Level	283	UPFLD Trip Level
257	UVARG Inhibit Time	284	UPFLD Warn Level
258	UVARG Trip Delay	285	OPFLD Inhibit Time
259	UVARG Trip Level	286	OPFLD Trip Delay
260	UVARG Warn Level	287	OPFLD Trip Level
261	OVARG Inhibit Time	288	OPFLD Warn Level
262	OVARG Trip Delay	291	Demand Period
263	OVARG Trip Level	292	Number of Periods
264	OVARG Warn Level		

❶ 193/592-EC5 only

Overload Setup Group

The parameters contained in the Overload Setup Group are also contained within the Advanced Setup Group. Refer to Advanced Setup Group on page 114 for more detail on these parameters.

Table 40 - Single/Three Phase & FLA Setting Parameters Detail

SINGLE/THREE PH This parameter allows the installer to configure the E3 for single-phase or three-phase mode. When set to single-phase mode, the E3 will report *L3* monitoring parameters as 0 and only use *L1* and *L2* to calculate *Average, Imbalance,* and total monitoring parameters.	Parameter Number	27
	Access Rule	Get/Set
	Data Type	BOOL
	Object Mapping	$2C_{hex}$-1-127
	Group	Overload Setup
	Units	—
	Minimum Value	0 = Single Phase
	Maximum Value	1 = Three Phase
	Default Value	1
FLA SETTING The motor's full load current rating is programmed in this parameter. Refer to Chapter 3 for instructions related to service factor, maximum continuous rated (MCR) motors, and wye-delta (star-delta) applications. This parameter is used to program the low-speed FLA value of a two-speed motor.	Parameter Number	28
	Access Rule	Get/Set
	Data Type	UINT
	Object Mapping	$2C_{hex}$-1-225 $2C_{hex}$-1-3 $2C_{hex}$-1-224
	Group	Overload Setup
	Units	Amps
	Minimum Value	See Table 41
	Maximum Value	See Table 41

Table 41 - FLA Setting Ranges & Default Values (with indicated setting precision)

FLA Current Range (A)			
Min	**Max**	**Default Value**	**CT Ratio Selection ❶**
0.040	2.00	0.040	—
1.00	5.00	1.00	—
3.00	15.00	3.00	—
5.00	25.00	5.00	—
9.0	45.0	9.0	—
18.0	90.0	18.0	—
9	45	9	50:5
18	90	18	100:5
28	140	28	150:5
42	210	42	200:5
60	302	60	300:5
84	420	84	500:5
125	630	125	600:5
172	860	172	800:5
240	1215	240	1200:5
450	2250	450	2500:5
1000	5000	1000	5000:5

❶ Devices with an FLA setting range of 9…5000 A.

Table 42 - Other Overload Setup Group Parameters Detail

TRIP CLASS The value in this parameter determines the maximum time (in seconds) for an overload trip to occur when the motor operating current is six times its rated current.	Parameter Number	29
	Access Rule	Get/Set
	Data Type	USINT
	Object Mapping	$2C_{hex}$-1-129
	Group	Overload Setup
	Units	—
	Minimum Value	5
	Maximum Value	30
	Default Value	10
OL/PTC RESET MODE This parameter defines whether an Overload or PTC Trip can be automatically or manually reset. Note: all other trips must be manually reset.	Parameter Number	30
	Access Rule	Get/Set
	Data Type	BOOL
	Object Mapping	0x29-1-130
	Group	Overload Setup
	Units	—
	Minimum Value	0 = Manual
	Maximum Value	1 = Auto
	Default Value	0
OL RESET LEVEL The value in this parameter establishes what the value stored in Parameter 9, % Therm Utilized, must fall below before an overload trip can be manually or automatically reset.	Parameter Number	31
	Access Rule	Get/Set
	Data Type	USINT
	Object Mapping	0x29-1-131
	Group	Overload Setup
	Units	% (Thermal Utilization)
	Minimum Value	0
	Maximum Value	100
	Default Value	75
CT RATIO ❶ This parameter defines the turns ratio of the primary current transformers (when used). See Table 41 - on page 5-112 for the corresponding FLA setting ranges.	Parameter Number	78
	Access Rule	Get/Set
	Data Type	USINT
	Object Mapping	0x2-1-178
	Group	Overload Setup
	Units	—
	Minimum Value	0 = 50:5
		1 = 100:5
		2 = 150:5
		3 = 200:5
		4 = 300:5
		5 = 500:5
		6 = 600:5
		7 = 800:5
		8 = 1200:5
		9 = 2500:5
	Maximum Value	10 = 5000:5
	Default Value	0 = 50:5

❶ FRN 2.000 and later

Advanced Setup Group

Table 43 - The parameters contained in the Advanced Setup Group are also contained within the Overload Setup Group. Refer to Overload Setup Group on page 111 for more detail on these parameters.

Table 44 - Trip Enable Parameter Detail

TRIP ENABLE		
This parameter allows the installer to enable or disable trip functions separately. Overload, Phase Loss, and Comm Fault are enabled from the factory. 1 = Enabled 0 = Disabled	Parameter Number	24
	Access Rule	Get/Set
	Data Type	WORD
	Object Mapping	0x29-1-124
	Group	Advanced Setup
	Units	—
	Minimum Value	0000000000000000
	Maximum Value	1111111111111111
	Default Value	0000001000000110

Table 45 - Trip Enable Bit Function Detail

Bit																
15	**14**	**13**	**12**	**11**	**10**	**9**	**8**	**7**	**6**	**5**	**4**	**3**	**2**	**1**	**0**	**Function**
																—
														X		Overload
													X			Phase Loss
												X				Ground Fault (E3 Plus)
											X					Stall
										X						Jam
									X							Underload
								X								PTC (E3 Plus)
							X									Current Imbalance
						X										Comm Fault
					X											Comm Idle
																—
																—
																—
	X															Remote Trip
X																Start Inhibit — Series C & Later

Table 46 - Warning Enable Parameter Detail

WARNING ENABLE		
This parameter allows the installer to enable or disable warning functions separately. All warning functions are disabled from the factory. 1 = Enabled 0 = Disabled	Parameter Number	25
	Access Rule	Get/Set
	Data Type	WORD
	Object Mapping	0x29-1-125
	Group	Advanced Setup
	Units	—
	Minimum Value	0000000000000000
	Maximum Value	1111111111111111
	Default Value	0000000000000000

Table 47 - Warning Enable Bit Function Detail

Bit																
15	**14**	**13**	**12**	**11**	**10**	**9**	**8**	**7**	**6**	**5**	**4**	**3**	**2**	**1**	**0**	**Function**
																—
														X		Overload
																—
												X				Ground Fault (E3 Plus)
																—
										X						Jam
									X							Underload
								X								PTC (E3 Plus)
							X									Current Imbalance
						X										Comm Fault
					X											Comm Idle
																—
																—
		X														PM #Starts — Series C & Later
	X															PM Oper. Hours — Series C & Later

Table 48 - Overload Warning Level Parameter Detail

OL WARN LEVEL This parameter sets the overload warning level.	Parameter Number	32
	Access Rule	Get/Set
	Data Type	USINT
	Object Mapping	$2C_{hex}$-1-132
	Group	Advanced Setup
	Units	% Thermal Utilization
	Minimum Value	0
	Maximum Value	100
	Default Value	85

Table 49 - Phase Loss Parameters Detail

PL INHIBIT TIME This parameter defines the amount of time for which phase loss detection is inhibited during a motor starting sequence.	Parameter Number	33
	Access Rule	Get/Set
	Data Type	USINT
	Object Mapping	$2C_{hex}$-1-133
	Group	Advanced Setup
	Units	Seconds
	Minimum Value	0
	Maximum Value	250
	Default Value	0
PL TRIP DELAY This parameter allows the installer to program a time duration for which a phase loss condition must exist prior to the device tripping.	Parameter Number	34
	Access Rule	Get/Set
	Data Type	USINT
	Object Mapping	$2C_{hex}$-1-134
	Group	Advanced Setup
	Units	Seconds
	Minimum Value	0.1
	Maximum Value	25.0
	Default Value	1.0

Table 50 - Ground Fault Parameters Detail

GF INHIBIT TIME (E3 Plus) This parameter defines the amount of time for which ground fault detection is inhibited during a motor starting sequence.	Parameter Number	35
	Access Rule	Get/Set
	Data Type	USINT
	Object Mapping	$2C_{hex}$-1-135
	Group	Advanced Setup
	Units	Seconds
	Minimum Value	0
	Maximum Value	250
	Default Value	10
GF TRIP DELAY (E3 Plus) This parameter allows the installer to program a time duration for which a ground fault condition must exist at the programmed level prior to the device tripping.	Parameter Number	36
	Access Rule	Get/Set
	Data Type	USINT
	Object Mapping	$2C_{hex}$-1-136
	Group	Advanced Setup
	Units	Seconds
	Minimum Value	0
	Maximum Value	25.0
	Default Value	0.5
GF TRIP LEVEL (E3 Plus) This parameter sets the ground fault trip level.	Parameter Number	37
	Access Rule	Get/Set
	Data Type	USINT
	Object Mapping	$2C_{hex}$-1-137
	Group	Advanced Setup
	Units	Amps
	Minimum Value	0.02
	Maximum Value	5.0
	Default Value	2.5
GF WARN LEVEL (E3 Plus) This parameter sets the ground fault warning level.	Parameter Number	38
	Access Rule	Get/Set
	Data Type	USINT
	Object Mapping	0xB4-1-1 (E3) $2C_{hex}$-1-138 (E3 Plus)
	Group	Advanced Setup
	Units	Amps
	Minimum Value	0.02
	Maximum Value	5.0
	Default Value	2.0
GF TRIP INHIBIT (E3 Plus) This parameter allows the installer to inhibit a ground fault trip from occurring when the ground fault current exceeds the maximum range of the core balance sensor (approximately 10 A). **NOTE:** This feature is only available in Series B and later devices.	Parameter Number	89
	Access Rule	Get/Set
	Data Type	BOOL
	Object Mapping	
	Group	Advanced Setup
	Units	--
	Minimum Value	0 = Disabled
	Maximum Value	1 = Enabled
	Default Value	0

GF SENSING RANGE (E3 Plus, Series C and later) This parameter selects one of the Ground Fault Sensing Ranges: 20…100 mA ❶ 100…500 mA 200 mA…1.0 A 1.0…5.0 A	Parameter Number	106
	Access Rule	Get/Set
	Data Type	USINT
	Object Mapping	2Chex-1-181
	Group	Advanced Setup
	Units	0 = 20…100 mA 1 = 100…500 mA 2 = 200 mA…1.0 A 3 = 1.0…5.0 A
	Minimum Value	0
	Maximum Value	3
	Default Value	3
GF WARN DELAY (E3 Plus, Series C and later) This parameter allows the installer to program a time duration for which a ground fault condition must exist at the programmed level prior to the device providing a warning.	Parameter Number	105
	Access Rule	Get/Set
	Data Type	USINT
	Object Mapping	2Chex-1-180
	Group	Advanced Setup
	Units	Seconds
	Minimum Value	0
	Maximum Value	250
	Default Value	0
GF FILTER ENABLE (FRN 5.0 and higher) This parameter allows the installer to filter ground fault currents from current based protection features including Thermal Overload, Jam, Stall, Under Load, and Current Imbalance.	Parameter Number	131
	Access Rule	Get/Set
	Data Type	BOOL
	Object Mapping	0Fhex-83-01
	Group	Advanced Setup
	Units	—
	Minimum Value	0 = Disable
	Maximum Value	1 = Enable
	Default Value	0

❶ For use with resistive loads only. For motor loads, consult factory.

Table 51 - Start Parameters Detail — Series C & Later

STARTS/HOUR This parameter allows the installer to limit the number of starts per hour.	Parameter Number	99
	Access Rule	Get/Set
	Data Type	USINT
	Object Mapping	29hex-1-104
	Group	Advanced Setup
	Units	—
	Minimum Value	0
	Maximum Value	120
	Default Value	2
STARTS INTERVAL This parameter allows the installer to limit the time between starts.	Parameter Number	100
	Access Rule	Get/Set
	Data Type	UINT
	Object Mapping	29hex-1-105
	Group	Advanced Setup
	Units	Seconds
	Minimum Value	0
	Maximum Value	3600
	Default Value	600

Table 52 - Stall Parameters Detail

STALL ENABLED TIME This parameter defines the amount of time for which stall detection is enabled during a motor starting sequence.	Parameter Number	39
	Access Rule	Get/Set
	Data Type	USINT
	Object Mapping	$2C_{hex}$-1-139
	Group	Advanced Setup
	Units	Seconds
	Minimum Value	0
	Maximum Value	250
	Default Value	10
STALL TRIP LEVEL This parameter sets the stall trip level.	Parameter Number	40
	Access Rule	Get/Set
	Data Type	USINT
	Object Mapping	$2C_{hex}$-1-140
	Group	Advanced Setup
	Units	% FLA
	Minimum Value	100
	Maximum Value	600
	Default Value	600

Table 53 - Jam Parameters Detail

JAM INHIBIT TIME This parameter defines the amount of time for which jam detection is inhibited during a motor starting sequence.	Parameter Number	41
	Access Rule	Get/Set
	Data Type	USINT
	Object Mapping	$2C_{hex}$-1-141
	Group	Advanced Setup
	Units	Seconds
	Minimum Value	0
	Maximum Value	250
	Default Value	10
JAM TRIP DELAY This parameter allows the installer to program a time duration for which a jam condition must exist at the programmed level prior to the device tripping.	Parameter Number	42
	Access Rule	Get/Set
	Data Type	USINT
	Object Mapping	$2C_{hex}$-1-142
	Group	Advanced Setup
	Units	Seconds
	Minimum Value	0.1
	Maximum Value	25.0
	Default Value	5.0
JAM TRIP LEVEL This parameter sets the jam trip level.	Parameter Number	43
	Access Rule	Get/Set
	Data Type	UINT
	Object Mapping	$2C_{hex}$-1-143
	Group	Advanced Setup
	Units	% FLA
	Minimum Value	50
	Maximum Value	600
	Default Value	250

JAM WARN LEVEL This parameter sets the jam warning level.	Parameter Number	44
	Access Rule	Get/Set
	Data Type	UINT
	Object Mapping	$2C_{hex}$-1-144
	Group	Advanced Setup
	Units	% FLA
	Minimum Value	50
	Maximum Value	600
	Default Value	150

Table 54 - Underload Parameters Detail

UL INHIBIT TIME This parameter defines the amount of time for which underload detection is inhibited during a motor starting sequence.	Parameter Number	45
	Access Rule	Get/Set
	Data Type	USINT
	Object Mapping	$2C_{hex}$-1-145
	Group	Advanced Setup
	Units	Seconds
	Minimum Value	0
	Maximum Value	250
	Default Value	10
UL TRIP DELAY This parameter allows the installer to program a time duration that an underload condition must exist at the programmed level prior to the device tripping.	Parameter Number	46
	Access Rule	Get/Set
	Data Type	USINT
	Object Mapping	$2C_{hex}$-1-146
	Group	Advanced Setup
	Units	Seconds
	Minimum Value	0.1
	Maximum Value	25.0
	Default Value	5.0
UL TRIP LEVEL This parameter sets the underload trip level.	Parameter Number	47
	Access Rule	Get/Set
	Data Type	USINT
	Object Mapping	$2C_{hex}$-1-147
	Group	Advanced Setup
	Units	% FLA
	Minimum Value	10 ❶
	Maximum Value	100
	Default Value	50
UL WARN LEVEL This parameter sets the underload warning level.	Parameter Number	48
	Access Rule	Get/Set
	Data Type	USINT
	Object Mapping	$2C_{hex}$-1-148
	Group	Advanced Setup
	Units	% FLA
	Minimum Value	10 ❶
	Maximum Value	100
	Default Value	70

❶ 50…100% for devices with FRN 1.003 and earlier

Table 55 - Current Imbalance Parameters Detail

CI INHIBIT TIME This parameter defines the amount of time current imbalance detection is inhibited during a motor starting sequence.	Parameter Number	49
	Access Rule	Get/Set
	Data Type	USINT
	Object Mapping	$2C_{hex}$-1-149
	Group	Advanced Setup
	Units	Seconds
	Minimum Value	0
	Maximum Value	250
	Default Value	10
CI TRIP DELAY This parameter allows the installer to program a time duration that a current imbalance condition must exist at the programmed level prior to the device tripping.	Parameter Number	50
	Access Rule	Get/Set
	Data Type	USINT
	Object Mapping	$2C_{hex}$-1-150
	Group	Advanced Setup
	Units	Seconds
	Minimum Value	0.1
	Maximum Value	25.0
	Default Value	5.0
CI TRIP LEVEL This parameter sets the current imbalance trip level.	Parameter Number	51
	Access Rule	Get/Set
	Data Type	USINT
	Object Mapping	$2C_{hex}$-1-151
	Group	Advanced Setup
	Units	%
	Minimum Value	10
	Maximum Value	100
	Default Value	35
CI WARN LEVEL This parameter sets the current imbalance warning level.	Parameter Number	52
	Access Rule	Get/Set
	Data Type	USINT
	Object Mapping	$2C_{hex}$-1-152
	Group	Advanced Setup
	Units	%
	Minimum Value	10
	Maximum Value	100
	Default Value	20

Table 56 - Input Parameters Detail

IN1 ASSIGNMENT This parameter allows the user to assign a specific function to the discrete IN1 input.	Parameter Number	83
	Access Rule	Get/Set
	Data Type	USINT
	Object Mapping	29_{hex}-1-177
	Group	Advanced Setup
	Units	—
	Minimum Value	0 = Normal
		1 = Trip Reset
		2 = Remote Trip
		3 = 2-Speed
	Maximum Value	4 = Force Snapshot ❶
	Default Value	0
IN2 ASSIGNMENT This parameter allows the user to assign a specific function to the discrete IN2 input.	Parameter Number	84
	Access Rule	Get/Set
	Data Type	USINT
	Object Mapping	29_{hex}-1-178
	Group	Advanced Setup
	Units	—
	Minimum Value	0 = Normal
		1 = Trip Reset
		2 = Remote Trip
		3 = 2-Speed
	Maximum Value	4 = Force Snapshot ❶
	Default Value	0
IN3 ASSIGNMENT (E3 Plus) This parameter allows the user to assign a specific function to the discrete IN3 input.	Parameter Number	85
	Access Rule	Get/Set
	Data Type	USINT
	Object Mapping	29_{hex}-1-179
	Group	Advanced Setup
	Units	—
	Minimum Value	0 = Normal
		1 = Trip Reset
		2 = Remote Trip
		3 = 2-Speed
	Maximum Value	4 = Force Snapshot ❶
	Default Value	0
IN4 ASSIGNMENT (E3 Plus) This parameter allows the user to assign a specific function to the discrete IN4 input.	Parameter Number	86
	Access Rule	Get/Set
	Data Type	USINT
	Object Mapping	29_{hex}-1-180
	Group	Advanced Setup
	Units	--
	Minimum Value	0 = Normal
		1 = Trip Reset
		2 = Remote Trip
		3 = 2-Speed
	Maximum Value	4 = Force Snapshot ❶
	Default Value	0

❶ Available in FRN 5.00 and higher

Table 57 - Two-Speed Motor Parameters Detail — E3 Plus

2-SPD NET ENABLE This parameter allows the use of Output Assemblies 104 and 105 for two-speed applications.	Parameter Number	87
	Access Rule	Get/Set
	Data Type	BOOL
	Object Mapping	$2C_{hex}$-1-154
	Group	Advanced Setup
	Units	—
	Minimum Value	0 = Disabled
	Maximum Value	1 = Enabled
	Default Value	0
2-SPEED FLA SET This parameter allows the user to program the high speed FLA value of a two-speed motor.	Parameter Number	88
	Access Rule	Get/Set
	Data Type	UINT
	Object Mapping	$2C_{hex}$-1-155 $2C_{hex}$-1-156 $2C_{hex}$-1-157
	Group	Advanced Setup
	Units	Amps
	Minimum Value	See Table 41 on page 112
	Maximum Value	See Table 41 on page 112
	Default Value	See Table 41 on page 112

Table 58 - Preventative Maintenance Parameters Detail

PM - # Starts (Series C and later) This parameter allows the installer to set a number of starts after which preventative maintenance should be performed.	Parameter Number	101
	Access Rule	Get/Set
	Data Type	UINT
	Object Mapping	29hex-1-106
	Group	Advanced Setup
	Units	—
	Minimum Value	0
	Maximum Value	65535
	Default Value	0
PM - Oper. Hours (Series C and later) This parameter allows the installer to set the hours of operation after which preventative maintenance should be performed.	Parameter Number	102
	Access Rule	Get/Set
	Data Type	UINT
	Object Mapping	29hex-1-107
	Group	Advanced Setup
	Units	Hours
	Minimum Value	0
	Maximum Value	65535
	Default Value	0

Reset/Lock Group

Table 59 - Reset Power Parameters Detail — E3 Plus Model EC5

RESET kWh This parameter allows the installer to reset the kWh accumulator to zero.	Parameter Number	293
	Access Rule	Get/Set
	Data Type	BOOL
	Object Mapping	0Fhex-125-01
	Group	Reset/Lock
	Units	—
	Minimum Value	0 = No Action
	Maximum Value	1 = Reset
	Default Value	0
RESET kVARh This parameter allows the installer to reset the kVARh accumulator to zero.	Parameter Number	294
	Access Rule	Get/Set
	Data Type	BOOL
	Object Mapping	0Fhex-126-01
	Group	Reset/Lock
	Units	—
	Minimum Value	0 = No Action
	Maximum Value	1 = Reset
	Default Value	0
RESET kVAh This parameter allows the installer to reset the kVAh accumulator to zero.	Parameter Number	295
	Access Rule	Get/Set
	Data Type	BOOL
	Object Mapping	0Fhex-127-01
	Group	Reset/Lock
	Units	—
	Minimum Value	0 = No Action
	Maximum Value	1 = Reset
	Default Value	0
RESET MAX kW DMND This parameter allows the installer to reset the maximum kW Demand parameter to zero.	Parameter Number	296
	Access Rule	Get/Set
	Data Type	BOOL
	Object Mapping	0Fhex-128-01
	Group	Reset/Lock
	Units	—
	Minimum Value	0 = No Action
	Maximum Value	1 = Reset
	Default Value	0
RESET MAX kVAR DMND This parameter allows the installer to reset the maximum kVAR Demand parameter to zero.	Parameter Number	297
	Access Rule	Get/Set
	Data Type	BOOL
	Object Mapping	0Fhex-129-01
	Group	Reset/Lock
	Units	—
	Minimum Value	0 = No Action
	Maximum Value	1 = Reset
	Default Value	0

RESET MAX kVA DMND This parameter allows the installer to reset the maximum kVA Demand parameter to zero.	Parameter Number	298
	Access Rule	Get/Set
	Data Type	BOOL
	Object Mapping	0Fhex-12A-01
	Group	Reset/Lock
	Units	—
	Minimum Value	0 = No Action
	Maximum Value	1 = Reset
	Default Value	0

Table 60 - Other Reset/Test Lock Group Parameters Detail

TRIP RESET This parameter provides the user with the capability of resetting a trip over the DeviceNet network. After a trip is reset, the parameter automatically returns to a "Ready" state.	Parameter Number	26
	Access Rule	Get/Set
	Data Type	BOOL
	Object Mapping	0x29-1-126
	Group	Reset/Lock
	Units	—
	Minimum Value	0 = Ready
	Maximum Value	1 = Reset
	Default Value	0
PROGRAM LOCK This parameter prohibits the device parameters from being altered when set to "Locked". This parameter must be set to "Unlocked" to allow parameter modification.	Parameter Number	53
	Access Rule	Get/Set
	Data Type	BOOL
	Object Mapping	0xB4-1-18
	Group	Reset/Lock
	Units	—
	Minimum Value	0 = Unlocked
	Maximum Value	1 = Locked
	Default Value	0
SET TO DEFAULTS This parameter allows the user to reset the parameter settings to the factory default values. After parameter values have been reset to the factory default settings, the parameter automatically returns to a "Ready" state.	Parameter Number	54
	Access Rule	Get/Set
	Data Type	BOOL
	Object Mapping	0xB4-1-19
	Group	Reset/Lock
	Units	—
	Minimum Value	0 = Ready
	Maximum Value	1 = Set
	Default Value	0
TEST ENABLE (Series C and later) This parameter allows the installer to enable or disable the test function of the Test/Reset button.	Parameter Number	103
	Access Rule	Get/Set
	Data Type	BOOL
	Object Mapping	29hex-1-108
	Group	Reset/Lock
	Units	—
	Minimum Value	0 = Disable
	Maximum Value	1 = Enable
	Default Value	1

CLEAR QUEUE (Series C and later) This parameter allows the user to clear the Trip Logs, Warning Logs, Starts Counter, and the Elapsed Time. Setting the Clear Queue parameter to "1" will clear/reset the Trip Logs, Warning Logs, Starts Counter, and the Elapsed Time parameters at the same time.	Parameter Number	104
	Access Rule	Get/Set
	Data Type	BOOL
	Object Mapping	29hex-1-132
	Group	Reset/Lock
	Units	—
	Minimum Value	0 = Ready
	Maximum Value	1 = Clear
	Default Value	0

DeviceNet Setup Group

Table 61 - Assembly Parameters Detail

OUTPUT ASSEMBLY This parameter is used to select the desired output assembly. See **Appendix B** for a listing of available assemblies	Parameter Number	59
	Access Rule	Get/Set
	Data Type	USINT
	Object Mapping	0xB4-1-16
	Group	DeviceNet Setup
	Units	—
	Minimum Value	0
	Maximum Value	105
	Default Value	103 (E3) 105 (E3 Plus)
INPUT ASSEMBLY This parameter is used to select the desired input assembly. See **Appendix B** for a listing of available assemblies	Parameter Number	60
	Access Rule	Get/Set
	Data Type	USINT
	Object Mapping	0xB4-1-17
	Group	DeviceNet Setup
	Units	—
	Minimum Value	0
	Maximum Value	107
	Default Value	100
ASSY WORD0 PARAM This parameter assigns the parameter value to be placed in Word 0 of Input Assembly 100.	Parameter Number	61
	Access Rule	Get/Set
	Data Type	USINT
	Object Mapping	0xB4-1-7
	Group	DeviceNet Setup
	Units	—
	Minimum Value	0
	Maximum Value	302 ❶
	Default Value	21
ASSY WORD1 PARAM This parameter assigns the parameter value to be placed in Word 1 of Input Assembly 100.	Parameter Number	62
	Access Rule	Get/Set
	Data Type	USINT
	Object Mapping	0xB4-1-8
	Group	DeviceNet Setup
	Units	—
	Minimum Value	0
	Maximum Value	302 ❶

ASSY WORD2 PARAM This parameter assigns the parameter value to be placed in Word 2 of Input Assembly 100.	Parameter Number	63
	Access Rule	Get/Set
	Data Type	USINT
	Object Mapping	0xB4-1-9
	Group	DeviceNet Setup
	Units	—
	Minimum Value	0
	Maximum Value	302 ❶
	Default Value	2
ASSY WORD3 PARAM This parameter assigns the parameter value to be placed in Word 3 of Input Assembly 100.	Parameter Number	64
	Access Rule	Get/Set
	Data Type	USINT
	Object Mapping	0xB4-1-10
	Group	DeviceNet Setup
	Units	—
	Minimum Value	0
	Maximum Value	302 ❶
	Default Value	3

❶ Maximum value of 21 for devices with FRN 1.003 and earlier.

Table 62 - Other DeviceNet Setup Group Parameters Detail

AUTO BAUD ENABLE When this parameter is enabled, the device will attempt to determine the network baud rate and set its baud rate to the same, provided network traffic exists. At least one node with an established baud rate must exist on the network for autobaud to occur.	Parameter Number	55
	Access Rule	Get/Set
	Data Type	BOOL
	Object Mapping	0xB4-1-15
	Group	DeviceNet Setup
	Units	—
	Minimum Value	0 = Disabled
	Maximum Value	1 = Enabled
	Default Value	1
NONVOL BAUD RATE This parameter allows the installer to manually set the desired baud rate. AutoBaud Enable, Parameter 55, must be disabled when using this parameter.	Parameter Number	56
	Access Rule	Get/Set
	Data Type	USINT
	Object Mapping	0xB4-1-6
	Group	DeviceNet Setup
	Units	—
	Minimum Value	0 = 125k 1 = 250k
	Maximum Value	2 = 500k
	Default Value	0
COS MASK This parameter allows the installer to define the change-of-state conditions that will result in a change-of-state message being produced. 1 = Enabled 0 = Disabled	Parameter Number	58
	Access Rule	Get/Set
	Data Type	WORD
	Object Mapping	0xB4-1-13
	Group	DeviceNet Setup
	Units	—
	Minimum Value	0000000000000000
	Maximum Value	0000001111111111
	Default Value	0000000000000000

Table 63 - Change of State Mask Bit Function Detail

Bit																
15	**14**	**13**	**12**	**11**	**10**	**9**	**8**	**7**	**6**	**5**	**4**	**3**	**2**	**1**	**0**	**Function**
															X	Trip
														X		Warning
													X			Output A
												X				Output B (E3 Plus)
											X					Input #1
										X						Input #2
									X							Input #3 (E3 Plus)
								X								Input #4 (E3 Plus)
							X									Motor Current
						X										Ground Fault Current (E3 Plus)

Output Setup Group

IMPORTANT The parameters in the Output Setup Group provide great flexibility in terms of output relay(s) operation under the conditions of Protection Faults, Comm Fault, and Comm Idle. It is important, therefore, that the installer fully understands the use of these parameters, their interaction with Trip Enable, Parameter 24, and the order of priority.

Order of Priority

The Out_Pr FltState parameter settings take priority over the other settings.

If Comm Fault and Comm Idle are enabled (set to 1) in Trip Enable, the state that the output(s) assumes is first determined by the settings in the Out_Pr FltState and Out_PrFltValue parameters.

If Out_Pr FltState is set to 1 = ignore fault, the state of the output(s) will be determined by the Out_DN FltState and Out_DN FltValue, and Out_DN IdlState and Out_DN IdlValue settings.

If Comm Fault and Comm Idle are disabled (set to 0) in Trip Enable, the state that the output(s) assumes will be determined by the Out_DN FltState and Out_DN Flt Value, and Out_DN IdlState and Out_DN IdleValue settings.

IMPORTANT The following information addresses the behavior variation between Series A and Series B and later products in relation to the Output Setup parameters.

E3 is Normal – No Trip Present

In normal operation, the E3 Overload Relay firmware latches Out A and Out B commands received through Polled I/O and Explicit messaging. The latched states are applied to the outputs until the next command is received.

E3 is Tripped

In the event of a protection trip, the state of an E3 Overload Relay output is determined by the programmed settings of the corresponding Out_ Pr FltState and Out_ Pr FltValue parameters.

When Out_ Pr FltState is set to “Ignore Fault”, output operation continues to respond to message commands. When Out_ Pr FltState is set to “Go to FltValue”, the output commanded states are determined by the settings of the Out_ Pr FltValue parameters, regardless of the state of the firmware latch.

Series A product continues to update the firmware latch as new commands are received while the E3 Overload Relay is in a tripped state.

Series B and later product sets the firmware latch to the Out_ Pr FltValue when Out_ Pr FltState is set to “Go to FltValue” while the E3 Overload Relay is in a tripped state.

E3 is Reset from Trip

After an E3 Overload Relay is returned to normal following a trip reset, operation of Out A and Out B is determined by the state of the firmware latch. The output state matrix below details this.

Table 64 - Output State Matrix for Output Setup Parameters

	Out X		Output State			
Commanded Output State Prior to Trip	**PR FltState Setting**	**PR FltValue Setting**	**with Active Trip**	**Last Commanded During Trip**	**Following Trip Reset (before any new command)**	
					Series A	**Series B & Later**
Open	0 = Go to FltValue	0 = Open	Open	Open	Open	Open
				Close	Closed	Open
				-none -	Open	Open
		1 = Closed	Closed	Open	Open	Closed
				Close	Closed	Closed
				-none -	Open	Closed
	1 = Ignore Fault	—	As Commanded			
Close	0 = Go to FltValue	0 = Open	Open	Open	Open	Open
				Close	Closed	Open
				-none -	Closed	Open
		1 = Closed	Closed	Open	Open	Closed
				Close	Closed	Closed
				-none -	Closed	Closed
	1 = Ignore Fault	—	As Commanded			

Table 65 - Output A Parameters Detail

OUTA PR FLTSTATE This parameter, in conjunction with Parameter 66, defines how Output A will respond when a trip occurs. When set to “1”, Output A will continue to operate as commanded via the network. When set to “0”, Output A will open or close as determined by the setting of Parameter 66.	Parameter Number	65
	Access Rule	Get/Set
	Data Type	BOOL
	Object Mapping	0x09-1-113
	Group	DeviceNet I/O
	Units	—
	Minimum Value	0 = Go to FltValue (#66)
	Maximum Value	1 = Ignore Fault
	Default Value	0
OUTA PR FLTVALUE This parameter determines the state that Output A assumes when a trip occurs and Parameter 65 is set to “0”.	Parameter Number	66
	Access Rule	Get/Set
	Data Type	BOOL
	Object Mapping	0x09-1-114
	Group	DeviceNet I/O
	Units	—
	Minimum Value	0 = Open
	Maximum Value	1 = Closed
	Default Value	0
OUTA DN FLTSTATE This parameter, in conjunction with Parameter 68, defines how Output A will respond when a DeviceNet network fault occurs. When set to “1”, Output A will hold the state prior to trip occurrence. When set to “0”, Output A will open or close as determined by the setting of Parameter 68. Output A can be configured to go to a desired state in the event of a DeviceNet network fault independent from enabling CommFault in Parameter 24, Trip Enable.	Parameter Number	67
	Access Rule	Get/Set
	Data Type	BOOL
	Object Mapping	0x09-1-5
	Group	DeviceNet I/O
	Units	—
	Minimum Value	0 = Go to FltValue (#68)
	Maximum Value	1 = Hold Last State
	Default Value	0
OUTA DN FLTVALUE This parameter determines the state that Output A assumes when a DeviceNet network fault occurs and Parameter 67 is set to “0”.	Parameter Number	68
	Access Rule	Get/Set
	Data Type	BOOL
	Object Mapping	0x09-1-6
	Group	DeviceNet I/O
	Units	—
	Minimum Value	0 = Open
	Maximum Value	1 = Closed
	Default Value	0
OUTA DN IDLSTATE This parameter, in conjunction with Parameter 70, defines how Output A will respond when the DeviceNet network is idle. When set to “1”, Output A will hold the state prior to trip occurrence. When set to “0”, Output A will open or close as determined by the setting in Parameter 70. The Dn Flt parameters supersede the Dn Idl parameters.	Parameter Number	69
	Access Rule	Get/Set
	Data Type	BOOL
	Object Mapping	0x09-1-7
	Group	DeviceNet I/O
	Units	—
	Minimum Value	0 = Go to IdlValue (#70)
	Maximum Value	1 = Hold Last State
	Default Value	0

OUTA DN IDLVALUE This parameter determines the state that Output A assumes when the network is idle and Parameter 69 is set to “0”.	Parameter Number	70
	Access Rule	Get/Set
	Data Type	BOOL
	Object Mapping	0x09-1-8
	Group	Advanced Setup
	Units	—
	Minimum Value	0 = Open
	Maximum Value	1 = Closed
	Default Value	0

Table 66 - Output B Parameters Detail — E3 Plus

OUTB PR FLTSTATE This parameter, in conjunction with Parameter 72, defines how Output B will respond when a trip occurs. When set to “1”, Output B will continue to operate as commanded via the network. When set to “0”, Output B will open or close as determined by the setting in Parameter 72.	Parameter Number	71
	Access Rule	Get/Set
	Data Type	BOOL
	Object Mapping	0x09-2-113
	Group	DeviceNet I/O
	Units	—
	Minimum Value	0 = Go to FltValue (#72)
	Maximum Value	1 = Ignore Fault
	Default Value	0
OUTB PR FLTVALUE This parameter determines the state that Output B assumes when a trip occurs and Parameter 71 is set to “0”.	Parameter Number	72
	Access Rule	Get/Set
	Data Type	BOOL
	Object Mapping	0x09-2-114
	Group	DeviceNet I/O
	Units	—
	Minimum Value	0 = Open
	Maximum Value	1 = Closed
	Default Value	0
OUTB DN FLTSTATE This parameter, in conjunction with Parameter 74, defines how Output B will respond when a DeviceNet network fault occurs. When set to “1”, Output B will hold the state prior to trip occurrence. When set to “0”, Output B will open or close as determined by the setting in Parameter 74. Output B can be configured to go to a desired state in the event of a DeviceNet network fault independent from enabling CommFault in Parameter 24, Trip Enable.	Parameter Number	73
	Access Rule	Get/Set
	Data Type	BOOL
	Object Mapping	0x09-2-5
	Group	DeviceNet I/O
	Units	—
	Minimum Value	0 = Go to FltValue (#74)
	Maximum Value	1 = Hold Last State
	Default Value	0
OUTB DN FLTVALUE This parameter determines the state that Output B assumes when a comm fault occurs and Parameter 73 is set to “0”.	Parameter Number	74
	Access Rule	Get/Set
	Data Type	BOOL
	Object Mapping	0x09-2-6
	Group	DeviceNet I/O
	Units	—
	Minimum Value	0 = Open
	Maximum Value	1 = Closed
	Default Value	0

OUTB DN IDLSTATE This parameter, in conjunction with Parameter 76, defines how Output B will respond when the DeviceNet network is idle. When set to “1”, Output B will hold the state prior to trip occurrence. When set to “0”, Output B will open or close as determined by the setting in Parameter 76. The Dn Flt parameters supersede the Dn Idl parameters.	Parameter Number	75
	Access Rule	Get/Set
	Data Type	BOOL
	Object Mapping	0x09-2-7
	Group	DeviceNet I/O
	Units	—
	Minimum Value	0 = Go to IdlValue (#76)
	Maximum Value	1 = Hold Last State
	Default Value	0
OUTB DN IDLVALUE This parameter determines the state that Output B assumes when the network is idle and Parameter 75 is set to “0”.	Parameter Number	76
	Access Rule	Get/Set
	Data Type	BOOL
	Object Mapping	0x09-2-8
	Group	DeviceNet I/O
	Units	—
	Minimum Value	0 = Open
	Maximum Value	1 = Closed
	Default Value	0

DeviceLogix Group — E3 Plus

Table 67 - Override Parameters Detail

COMM OVERRIDE This parameter is used to enable DeviceLogix programs to override normal output behavior in the event of a communication status change. These events include all states where the E3 Plus is without an I/O connection (I/O Connection does not exist, has timed out, has been deleted, or is currently idle)	Parameter Number	79
	Access Rule	Get/Set
	Data Type	BOOL
	Object Mapping	0x1E-1-105
	Group	DeviceLogix
	Units	—
	Minimum Value	0 = Disabled
	Maximum Value	1 = Enabled
	Default Value	0
NETWORK OVERRIDE This parameter is used to enable DeviceLogix programs to override normal output behavior in the event of a network fault. Network faults include duplicate MAC ID failures and bus off conditions.	Parameter Number	80
	Access Rule	Get/Set
	Data Type	BOOL
	Object Mapping	0x1E-1-104
	Group	DeviceLogix
	Units	—
	Minimum Value	0 = Disabled
	Maximum Value	1 = Enabled
	Default Value	0

Table 68 - Net Outputs Parameter Detail

NET OUTPUTS This parameter monitors network outputs controlled through DeviceLogix programs.	Parameter Number	81
	Access Rule	Get/Set
	Data Type	WORD
	Object Mapping	0x04-1-3
	Group	DeviceLogix
	Units	—
	Minimum Value	
	Maximum Value	
	Default Value	

Table 69 - Net Outputs Bit Function Detail

Bits																
15	**14**	**13**	**12**	**11**	**10**	**9**	**8**	**7**	**6**	**5**	**4**	**3**	**2**	**1**	**0**	**Function**
															X	Net Output 0
														X		Net Output 1
													X			Net Output 2
												X				Net Output 3
											X					Net Output 4
										X						Net Output 5
									X							Net Output 6
								X								Net Output 7
							X									Net Output 8
						X										Net Output 9
					X											Net Output 10
				X												Net Output 11
			X													Net Output 12
		X														Net Output 13
	X															Net Output 14
X																DLogix Enabled

Table 70 - Net Outputs Change-of-State (COS) Mask Parameter Detail

NET OUT COS MASK This parameter allows the installer to select the events for which a COS message is produced. 1 = Enabled 0 = Disabled	Parameter Number	82
	Access Rule	Get/Set
	Data Type	WORD
	Object Mapping	0xB4-1-50
	Group	DeviceLogix
	Units	—
	Minimum Value	
	Maximum Value	
	Default Value	

Table 71 - Net Outputs Change of State Mask Bit Function Detail

Bits																
15	**14**	**13**	**12**	**11**	**10**	**9**	**8**	**7**	**6**	**5**	**4**	**3**	**2**	**1**	**0**	**Function**
															X	Net Output 0
														X		Net Output 1
													X			Net Output 2
												X				Net Output 3
											X					Net Output 4
										X						Net Output 5
									X							Net Output 6
								X								Net Output 7
							X									Net Output 8
						X										Net Output 9
					X											Net Output 10
				X												Net Output 11
			X													Net Output 12
		X														Net Output 13
	X															Net Output 14

Monitoring Parameters

Introduction

This chapter provides information for the current monitoring and diagnostic parameters of the E3 Overload Relay.

Phase Current Reporting

Current Range

The E3 Overload Relay utilizes a true RMS algorithm to calculate the RMS value of the current passing through phase L1, L2, and L3. The relay is capable of sensing currents ranging from 0%...720% of the maximum FLA Setting.

IMPORTANT The E3 Overload Relay will report 0 A or 0% FLA if the current is below 30% of the minimum FLA Setting.

IMPORTANT The E3 Overload Relay is capable of reporting values greater than 720% of the maximum FLA Setting, but the accuracy of the value may be compromised.

The following chart illustrates the reporting current precision, the minimum and maximum reporting current values, and the 720% maximum FLA value for each current range.

Table 1: Current Reporting Summary (with indicated precision)

FLA Setting Range [A]	CT Ratio	Min. Reporting Current [A] ❶	Max Reporting Current [A] ❷
0.4…2.0	—	0.15	14.40
1…5	—	0.30	36.00
3…15	—	0.90	108.00
5…25	—	1.50	180.00
9…45	—	3.0	360.0
18…90	—	6.0	720.0
9…45	50:5	3	360
18…90	100:5	6	720
28…140	150:5	9	1080
42…210	200:5	12	1440
60…302	300:5	18	2160
84…420	500:5	30	3600
125…630	600:5	36	4320
172…860	800:5	48	5760
240…1215	1200:5	72	8640
450…2250	2500:5	150	18000
1000…5000	5000:5	300	32767

❶ 0 A is reported when the actual current is below the indicated minimum reporting current.
❷ The E3 is capable of reporting higher currents, but reporting accuracy is compromised.

Reporting Accuracy

Table 2: Current Reporting Accuracy

FLA Setting Range	Operating Range	
	100% Min. FLA Setting… 720% Max. FLA Setting	50% Min. FLA Setting… 100% Min. FLA Setting
0.4…2.0 A	±10%	—
All others	±6%	±10%

IMPORTANT The accuracy specified above is only applicable to non-distorted sinusoidal currents.

Ground Fault Current Reporting

Current Range

The following chart illustrates the minimum and maximum reporting ground fault current values for a given ground fault current range.

Table 3: Ground Fault Current Reporting Summary

Ground Fault Current Range	Minimum Reporting Current ❶❸	Maximum Reporting Current ❷❸	E3 Plus Cat. No. /Series
20…100 mA❹	10 mA	180 mA	193/592-EC3 and -EC5 — Series C and later
100…500 mA	50 mA	900 mA	193/592-EC3 and -EC5 — Series C and later
200 mA…1.0 A	100 mA	1.80 A	193/592-EC3 and -EC5 — Series C and later
1.0…5.0 A	500 mA	9.00 A	193/592-EC2 and -EC5 — Series A and later

❶ The E3 Plus Overload Relay will report 0 A if the ground fault current is below 50% of the minimum ground fault current setting for a given range.
❷ The E3 Plus Overload Relay is capable of reporting values greater than the maximum values shown, but the accuracy of the value is compromised.
❸ The accuracy specified is only applicable to non-distorted sinusoidal currents.
❹ 20…100 mA for resistive loads only. For motor loads, consult your local Rockwell Automation sales office or Allen-Bradley distributor.

Frequency Range

The E3 Plus Overload Relay is capable of sensing variable frequency ground fault currents ranging from 20...250 Hz.

Exception: Any E3 Plus Overload Relay using an external ground fault sensor is limited to 50/60 Hz detection.

Diagnostic Parameters

The E3 Overload relay provides a number of motor diagnostic parameters to assist maintenance personnel with information to minimize unplanned down time. The relay also provides a number of preventative maintenance diagnostics to maximize the life of an electric motor.

Monitor Group

L1 CURRENT This parameter provides the L1 phase current measurement in amperes.	Parameter Number	1
	Access Rule	Get
	Data Type	INT
	Object Mapping	$2C_{hex}$-1-231 $2C_{hex}$-1-8 $2C_{hex}$-1-227
	Group	Monitor
	Units	Amps
	Minimum Value	See Table 1:
	Maximum Value	See Table 1:
	Default Value	None

L2 CURRENT This parameter provides the L2 phase current measurement in amperes.	Parameter Number	2
	Access Rule	Get
	Data Type	INT
	Object Mapping	$2C_{hex}$-1-232 $2C_{hex}$-1-9 $2C_{hex}$-1-228
	Group	Monitor
	Units	Amps
	Minimum Value	See Table 1:
	Maximum Value	See Table 1:
	Default Value	None

L3 CURRENT This parameter provides the L3 phase current measurement in amperes.	Parameter Number	3
	Access Rule	Get
	Data Type	INT
	Object Mapping	$2C_{hex}$-1-233 $2C_{hex}$-1-10 $2C_{hex}$-1-229
	Group	Monitor
	Units	Amps
	Minimum Value	See Table 1:
	Maximum Value	See Table 1:
	Default Value	None

AVERAGE CURRENT This parameter provides the average current measurement in amperes.	Parameter Number	4
	Access Rule	Get
	Data Type	INT
	Object Mapping	$2C_{hex}$-1-230 $2C_{hex}$-1-5 $2C_{hex}$-1-226
	Group	Monitor
	Units	Amps
	Minimum Value	See Table 1:
	Maximum Value	See Table 1:
	Default Value	None

L1 %FLA This parameter provides the L1 phase current measurement as a percentage of the motor's full load current rating (Parameter 28, *FLA Setting*).	Parameter Number	5
	Access Rule	Get
	Data Type	UINT
	Object Mapping	$2C_{hex}$-1-105
	Group	Monitor
	Units	% FLA
	Minimum Value	0
	Maximum Value	1000
	Default Value	None

L2 %FLA This parameter provides the L2 phase current measurement as a percentage of the motor's full load current rating (Parameter 28, *FLA Setting*).	Parameter Number	6
	Access Rule	Get
	Data Type	UINT
	Object Mapping	$2C_{hex}$-1-106
	Group	Monitor
	Units	% FLA
	Minimum Value	0
	Maximum Value	1000
	Default Value	None

L3 %FLA This parameter provides the L3 phase current measurement as a percentage of the motor's full load current rating (Parameter 28, *FLA Setting*).	Parameter Number	7
	Access Rule	Get
	Data Type	UINT
	Object Mapping	$2C_{hex}$-1-107
	Group	Monitor
	Units	% FLA
	Minimum Value	0
	Maximum Value	1000
	Default Value	None

AVERAGE %FLA This parameter provides the average current measurement as a percentage of the motor's full load current rating (Parameter 28, *FLA Setting*).	Parameter Number	8
	Access Rule	Get
	Data Type	UINT
	Object Mapping	$2C_{hex}$-1-108
	Group	Monitor
	Units	% FLA
	Minimum Value	0
	Maximum Value	1000
	Default Value	None

% THERM UTILIZED This parameter reports the calculated percent thermal capacity utilization of the connected motor.	Parameter Number	9
	Access Rule	Get
	Data Type	USINT
	Object Mapping	$2C_{hex}$-1-109
	Group	Monitor
	Units	%
	Minimum Value	0
	Maximum Value	100
	Default Value	None

GF CURRENT (E3 Plus) This parameter provides the ground fault current measurement in amperes.	Parameter Number	10
	Access Rule	Get
	Data Type	INT
	Object Mapping	$2C_{hex}$-1-110
	Group	Monitor
	Units	Amps
	Minimum Value	0.00
	Maximum Value	12.75 (approx.)
	Default Value	None

CURRENT IMBAL This parameter provides the percent current imbalance measurement. %CI = 100 (I_d/I_a) where, CI: Current imbalance I_d: Maximum deviation from the average current I_a: Average current	Parameter Number	11
	Access Rule	Get
	Data Type	USINT
	Object Mapping	$2C_{hex}$-1-111
	Group	Monitor
	Units	%
	Minimum Value	0
	Maximum Value	200
	Default Value	None

TIME TO TRIP This parameter provides an estimated time for an overload trip to occur when the measured motor current exceeds the trip rating. When the measured current is below the trip rating, the value 9,999 seconds is reported.	Parameter Number	12
	Access Rule	Get
	Data Type	UINT
	Object Mapping	$2C_{hex}$-1-112
	Group	Monitor
	Units	Seconds
	Minimum Value	0
	Maximum Value	9999
	Default Value	9999

TIME TO RESET This parameter reports the time until an overload trip may be reset either manually or automatically. After an overload trip is reset, the value 9,999 seconds is reported.	Parameter Number	13
	Access Rule	Get
	Data Type	UINT
	Object Mapping	$2C_{hex}$-1-113
	Group	Monitor
	Units	Seconds
	Minimum Value	0
	Maximum Value	9999
	Default Value	9999

TRIP STATUS This parameter provides trip identification. 1 = Trip 0 = No Trip	Parameter Number	14
	Access Rule	Get
	Data Type	WORD
	Object Mapping	0x29-1-114
	Group	Monitor
	Units	—
	Minimum Value	—
	Maximum Value	—
	Default Value	None

Bits																**Function:**
15	**14**	**13**	**12**	**11**	**10**	**9**	**8**	**7**	**6**	**5**	**4**	**3**	**2**	**1**	**0**	
															X	Test Trip
														X		Overload
													X			Phase Loss
												X				Ground Fault (E3 Plus)
											X					Stall
										X						Jam
									X							Underload
								X								PTC (E3 Plus)
							X									Current Imbalance
						X										Comm Fault
					X											Comm Idle
				X												Nonvolatile Memory Fault
			X													Hardware Fault
																—
	X															Remote Trip
X																Blocked Start/Start Inhibit ❶

❶ Series C and later

WARNING STATUS This parameter provides warning identification.	Parameter Number	15
	Access Rule	Get
	Data Type	WORD
	Object Mapping	0x29-1-115
	Group	Monitor
	Units	—
	Minimum Value	—
	Maximum Value	—
	Default Value	None

Bit																**Function:**
15	**14**	**13**	**12**	**11**	**10**	**9**	**8**	**7**	**6**	**5**	**4**	**3**	**2**	**1**	**0**	
																—
														X		Overload
																—
												X				Ground Fault (E3 Plus)
																—
										X						Jam
									X							Underload
								X								PTC (E3 Plus)
							X									Current Imbalance
						X										Comm Fault
					X											Comm Idle
																—
			X													Config Fault
		X														PM - # Starts❶
	X															PM – Oper. Hours❶

❶ Series C and later

TRIP LOG 0 This parameter records the latest trip.	Parameter Number	16
	Access Rule	Get
	Data Type	WORD
	Object Mapping	0x29-1-116
	Group	Monitor
	Units	—
	Minimum Value	See Trip Status table
	Maximum Value	See Trip Status table
	Default Value	None

TRIP LOG 1 This parameter records the trip previous to Trip Log 0.	Parameter Number	17
	Access Rule	Get
	Data Type	WORD
	Object Mapping	0x29-1-117
	Group	Monitor
	Units	—
	Minimum Value	See Trip Status table
	Maximum Value	See Trip Status table
	Default Value	None

TRIP LOG 2 This parameter records the trip previous to Trip Log 1.	Parameter Number	18
	Access Rule	Get
	Data Type	WORD
	Object Mapping	0x29-1-118
	Group	Monitor
	Units	—
	Minimum Value	See Trip Status table
	Maximum Value	See Trip Status table
	Default Value	None

TRIP LOG 3 This parameter records the trip previous to Trip Log 2.	Parameter Number	19
	Access Rule	Get
	Data Type	WORD
	Object Mapping	0x29-1-119
	Group	Monitor
	Units	—
	Minimum Value	See Trip Status table
	Maximum Value	See Trip Status table
	Default Value	None

TRIP LOG 4 This parameter records the trip previous to Trip Log 3.	Parameter Number	20
	Access Rule	Get
	Data Type	WORD
	Object Mapping	0x29-1-120
	Group	Monitor
	Units	—
	Minimum Value	See Trip Status table
	Maximum Value	See Trip Status table
	Default Value	None

DEVICE STATUS This parameter provides status information of the E3 Overload Relay as outlined in the table below. 1 = On or Present 0 = Off or Not Present	Parameter Number	21
	Access Rule	Get
	Data Type	WORD
	Object Mapping	0x29-1-121
	Group	Monitor
	Units	—
	Minimum Value	—
	Maximum Value	—
	Default Value	None

Bit																**Function:**
15	**14**	**13**	**12**	**11**	**10**	**9**	**8**	**7**	**6**	**5**	**4**	**3**	**2**	**1**	**0**	
															X	Trip
														X		Warning
													X			Output A
												X				Output B (E3 Plus)
											X					Input #1
										X						Input #2
									X							Input #3 (E3 Plus)
								X								Input #4 (E3 Plus)
							X									Motor Current
						X										Ground Fault Current (E3 Plus)

Firmware This parameter allows the installer to read the firmware revision number (FRN) of the E3 Overload Relay.	Parameter Number	22
	Access Rule	Get
	Data Type	UINT
	Object Mapping	B4hex-01-0C
	Group	Monitor
	Units	—
	Minimum Value	0
	Maximum Value	65535
	Default Value	—

Dev Config This parameter allows the installer to read which features are enabled in the E3 Overload Relay as outlined in the table below: 1 = On or Present 0 = Off or Not Present	Parameter Number	23
	Access Rule	Get
	Data Type	UINT
	Object Mapping	B4hex-01-14
	Group	Monitor
	Units	—
	Minimum Value	—
	Maximum Value	—
	Default Value	—

Bit																**Function:**
15	**14**	**13**	**12**	**11**	**10**	**9**	**8**	**7**	**6**	**5**	**4**	**3**	**2**	**1**	**0**	
															X	4 in/2 out
														X		PTC Hardware
													X			GF Hardware
												X				External GF
											X					Heat Trace
										X						Voltage Hdw

Warn Log 0 (Series C and later) This parameter records the latest warning.	Parameter Number	90
	Access Rule	Get
	Data Type	WORD
	Object Mapping	29hex-1-109
	Group	Monitor
	Units	—
	Minimum Value	See Warning Status Table
	Maximum Value	See Warning Status Table
	Default Value	0

Warn Log 1 (Series C and later) This parameter records the warning previous to Warn Log 0.	Parameter Number	91
	Access Rule	Get
	Data Type	WORD
	Object Mapping	29hex-1-110
	Group	Monitor
	Units	—
	Minimum Value	See Warning Status Table
	Maximum Value	See Warning Status Table
	Default Value	0

Warn Log 2 (Series C and later) This parameter records the warning previous to Warn Log 1.	Parameter Number	92
	Access Rule	Get
	Data Type	WORD
	Object Mapping	29hex-1-111
	Group	Monitor
	Units	—
	Minimum Value	See Warning Status Table
	Maximum Value	See Warning Status Table
	Default Value	0

Warn Log 3 (Series C and later) This parameter records the warning previous to Warn Log 2.	Parameter Number	93
	Access Rule	Get
	Data Type	WORD
	Object Mapping	29hex-1-112
	Group	Monitor
	Units	—
	Minimum Value	See Warning Status Table
	Maximum Value	See Warning Status Table
	Default Value	0

Warn Log 4 (Series C and later) This parameter records the warning previous to Warn Log 3.	Parameter Number	94
	Access Rule	Get
	Data Type	WORD
	Object Mapping	29hex-1-113
	Group	Monitor
	Units	—
	Minimum Value	See Warning Status Table
	Maximum Value	See Warning Status Table
	Default Value	0

Elapsed Time (Series C and later) This parameter records the hours of motor operation - the time period that the E3 is sensing motor current present (motor current must be greater than 30% of the minimum Full Load Current (FLA) setting).	Parameter Number	95
	Access Rule	Get
	Data Type	UINT
	Object Mapping	29hex-1-100
	Group	Monitor
	Units	Hours
	Minimum Value	0
	Maximum Value	65535
	Default Value	0

Starts Counter (Series C and later) This parameter records the number of starts - motor current transitions from zero to non-zero values (motor current must be greater than 30% of the minimum Full Load Current (FLA) setting).	Parameter Number	96
	Access Rule	Get
	Data Type	UINT
	Object Mapping	29hex-1-101
	Group	Monitor
	Units	-
	Minimum Value	0
	Maximum Value	65535
	Default Value	0

Starts Available (Series C and later) This parameter reports the number of starts currently available based on the Start Inhibit settings (parameter 99, Starts/Hour).	Parameter Number	97
	Access Rule	Get
	Data Type	USINT
	Object Mapping	29hex-1-102
	Group	Monitor
	Units	-
	Minimum Value	0
	Maximum Value	120
	Default Value	0

Time to Start (Series C and later) This parameter reports the timed non-zero value when a Start Inhibit trip is in effect (parameter 100, Starts Interval).	Parameter Number	98
	Access Rule	Get
	Data Type	UINT
	Object Mapping	29hex-1-103
	Group	Monitor
	Units	Seconds
	Minimum Value	0
	Maximum Value	3600
	Default Value	0

Voltage Parameters

Introduction

The E3 Plus model EC5 has the capability to protect against poor voltage quality by offering voltage based protection. The user can prevent a contactor from energizing if the voltage is either too high or too low. This model also provides maintenance personnel with voltage based diagnostic information when investigating an unplanned shut down. This chapter provides information for the voltage monitoring and setup parameters for the E3 Plus Overload Relay model EC5.

Phase Voltage Reporting

Voltage Range

The E3 Plus model EC5 utilizes a true RMS algorithm to calculate the RMS value of the voltage that exists on L1, L2, and L3. The relay is capable of sensing voltages ranging from 0V L-L to 690V L-L for frequencies ranging from 20 Hz to 250 Hz. The relay supports the following voltage systems:

- Single Phase (2 Wire)
- Delta (Direct Connection)
- Wye (Direct Connection or with 3 Potential Transformers)
- Open Delta (with 2 Potential Transformers)
- Delta with PT (with 3 Potential Transformers)

IMPORTANT	The E3 Plus model EC5 will report 0 V if the voltage is below 50V L-L .

IMPORTANT	The E3 Plus model EC5 is capable of reporting values greater than 690V L-L and for frequencies less than 40 Hz or greater than 80 Hz, but the accuracy of the value may be compromised.

IMPORTANT	The E3 Plus model EC5 calculates frequency based on the voltage signal on L1.

The following chart illustrates the reported voltage parameters based on the chosen voltage mode. Parameters that do not have an "X" will report 0.

Table 4: Voltage Reporting Summary

Parameter Name	Single Phase	Delta	Wye	Open Delta	Delta with PT
L1-L2 Voltage	X	X	X	X	X
L2-L3 Voltage	X	X	X	X	X
L3-L1 Voltage		X	X	X	X
Ave Voltage L-L	X	X	X	X	X
L1-N Voltage	X		X		
L2-N Voltage	X		X		
L3-N Voltage			X		
Ave Voltage L-N	X		X		
Voltage Unbalance	X	X	X	X	X
Voltage Frequency	X	X	X	X	X
V Phase Rot		X	X	X	X

Voltage Accuracy

Table 5: Voltage Reporting Accuracy

Operating Range	Parameter	Accuracy
50 V L-L … 690V L-L 40 Hz … 80Hz	Line to Line Voltage	3%
	Line to Neutral Voltage	3%
	Voltage Frequency	1%

Voltage Monitor Group

V Trip Status		
This parameter provides voltage based trip identification as outlined in the table below: 1 = Trip 0 = No Trlp	Parameter Number	
	Access Rule	Get
	Data Type	UINT
	Object Mapping	
	Group	Voltage monitor
	Units	—
	Minimum Value	—
	Maximum Value	—
	Default Value	—

Bit																Function:
15	14	13	12	11	10	9	8	7	6	5	4	3	2	1	0	
															X	Voltage Hardware Fault
														X		Under Volt L-L
													X			Over Volt L-L
												X				Voltage Unbalance
											X					Phase Rotation
										X						Under Frequency
									X							Over Frequency

V Warn Status	Parameter Number	161
This parameter provides voltage based warning identification as outlined in the table below: 1 = Warning 0 = No Warning	Access Rule	Get
	Data Type	UINT
	Object Mapping	0Fhex-A1-01
	Group	Voltage monitor
	Units	—
	Minimum Value	—
	Maximum Value	—
	Default Value	—

Bit																**Function:**
15	**14**	**13**	**12**	**11**	**10**	**9**	**8**	**7**	**6**	**5**	**4**	**3**	**2**	**1**	**0**	
															X	Voltage Hardware Fault
														X		Under Volt L-L
													X			Over Volt L-L
												X				Voltage Unbalance
											X					Phase Rotation
										X						Under Frequency
									X							Over Frequency

L1-L2 Voltage	Parameter Number	162
This parameter provides the L1-L2 voltage measurement in Volts.	Access Rule	Get
	Data Type	UINT
	Object Mapping	0Fhex-A2-01
	Group	Voltage Monitor
	Units	Volt
	Minimum Value	0
	Maximum Value	65545
	Default Value	—

L2-L3 Voltage	Parameter Number	163
This parameter provides the L2-L3 voltage measurement in Volts.	Access Rule	Get
	Data Type	UINT
	Object Mapping	0Fhex-A3-01
	Group	Voltage Monitor
	Units	Volt
	Minimum Value	0
	Maximum Value	65545
	Default Value	—

L3-L1 Voltage	Parameter Number	164
This parameter provides the L3-L1 voltage measurement in Volts.	Access Rule	Get
	Data Type	UINT
	Object Mapping	0Fhex-A4-01
	Group	Voltage Monitor
	Units	Volt
	Minimum Value	0
	Maximum Value	65545
	Default Value	—

Ave Voltage L-L This parameter provides the average line to line voltage measurement in Volts.	Parameter Number	165
	Access Rule	Get
	Data Type	UINT
	Object Mapping	0Fhex-A5-01
	Group	Voltage Monitor
	Units	Volt
	Minimum Value	0
	Maximum Value	65545
	Default Value	—

L1-N Voltage This parameter provides the L1-N voltage measurement in Volts.	Parameter Number	166
	Access Rule	Get
	Data Type	UINT
	Object Mapping	0Fhex-A6-01
	Group	Voltage Monitor
	Units	Volt
	Minimum Value	0
	Maximum Value	65545
	Default Value	—

L2-N Voltage This parameter provides the L2-L3 voltage measurement in Volts.	Parameter Number	167
	Access Rule	Get
	Data Type	UINT
	Object Mapping	0Fhex-A7-01
	Group	Voltage Monitor
	Units	Volt
	Minimum Value	0
	Maximum Value	65545
	Default Value	—

L3-N Voltage This parameter provides the L3-N voltage measurement in Volts.	Parameter Number	168
	Access Rule	Get
	Data Type	UINT
	Object Mapping	0Fhex-A8-01
	Group	Voltage Monitor
	Units	Volt
	Minimum Value	0
	Maximum Value	65545
	Default Value	—

Ave Voltage L-N This parameter provides the average line to neutral voltage measurement in Volts.	Parameter Number	169
	Access Rule	Get
	Data Type	UINT
	Object Mapping	0Fhex-A9-01
	Group	Voltage Monitor
	Units	Volt
	Minimum Value	0
	Maximum Value	65545
	Default Value	—

Volt Unbalance		
This parameter provides the percent current unbalance measurement. %VU = 100 (Vd/Va) where, VU: Voltage Unbalance Vd: Maximum deviation from the average voltage Va: Average voltage	Parameter Number	170
	Access Rule	Get
	Data Type	USINT
	Object Mapping	0Fhex-AA-01
	Group	Voltage Monitor
	Units	%
	Minimum Value	0
	Maximum Value	255
	Default Value	—

Volt Frequency		
This parameter provides the frequency based on the incoming voltage signal.	Parameter Number	171
	Access Rule	Get
	Data Type	USINT
	Object Mapping	0Fhex-AB-01
	Group	Voltage Monitor
	Units	Hz
	Minimum Value	0
	Maximum Value	250
	Default Value	—

V Phase Rot		
This parameter provides the rotation of the three phase voltage system.	Parameter Number	172
	Access Rule	Get
	Data Type	USINT
	Object Mapping	0Fhex-AC-01
	Group	Voltage Monitor
	Units	0 = No Rotation 1 = ABC 2 = ACB
	Minimum Value	0
	Maximum Value	2
	Default Value	—

Voltage Setup Group

Volt Mode		
This parameter selects the voltage system that the relay is monitoring. *Open Delta* and *Delta with PT* is only valid for the 193-EC5ZZ (9…5000 A)	Parameter Number	156
	Access Rule	Get/Set
	Data Type	USINT
	Object Mapping	0Fhex-AC-01
	Group	Voltage Setup
	Units	0 = Delta 1 = Wye 2 = Open Delta 3 = Delta with PT
	Minimum Value	0
	Maximum Value	3
	Default Value	0

V Trip Enable		
This parameter allows the installer to enable or disable voltage based trip functions separately. 1 = Trip 0 = No Trlp	Parameter Number	158
	Access Rule	Get/Set
	Data Type	UINT
	Object Mapping	0Fhex-9E-01
	Group	Voltage Setup
	Units	—
	Minimum Value	0000000000000000
	Maximum Value	0000000000111111
	Default Value	0000000000000000

Bit																Function:
15	14	13	12	11	10	9	8	7	6	5	4	3	2	1	0	
															X	Voltage Hardware Fault
														X		Under Volt L-L
													X			Over Volt L-L
												X				Voltage Unbalance
											X					Phase Rotation
										X						Under Frequency
									X							Over Frequency

V Warn Enable		
This parameter allows the installer to enable or disable voltage based warning functions separately. 1 = Warning 0 = No Warning	Parameter Number	159
	Access Rule	Get/Set
	Data Type	UINT
	Object Mapping	0Fhex-9F-01
	Group	Voltage Setup
	Units	—
	Minimum Value	0000000000000000
	Maximum Value	0000000000111111
	Default Value	0000000000000001

Bit																Function:
15	14	13	12	11	10	9	8	7	6	5	4	3	2	1	0	
															X	Voltage Hardware Fault
														X		Under Volt L-L
													X			Over Volt L-L
												X				Voltage Unbalance
											X					Phase Rotation
										X						Under Frequency
									X							Over Frequency

UV Inhibit Time		
This parameter defines the amount of time for which an under voltage detection is inhibited during a motor starting sequence.	Parameter Number	215
	Access Rule	Get/Set
	Data Type	USINT
	Object Mapping	0Fhex-D7-01
	Group	Voltage Setup
	Units	Seconds
	Minimum Value	0
	Maximum Value	250
	Default Value	10

UV Trip Delay		
This parameter allows the installer to program a time duration for which an under voltage condition must exist prior to the device tripping.	Parameter Number	216
	Access Rule	Get/Set
	Data Type	USINT
	Object Mapping	0Fhex-D8-01
	Group	Voltage Setup
	Units	Seconds
	Minimum Value	0.1
	Maximum Value	25.0
	Default Value	1.0

UV Trip Level This parameter sets the under voltage trip level.	Parameter Number	217
	Access Rule	Get/Set
	Data Type	UINT
	Object Mapping	0Fhex-D9-01
	Group	Voltage Setup
	Units	Volts
	Minimum Value	0
	Maximum Value	65535
	Default Value	100

UV Warn Level This parameter sets the under voltage warning level.	Parameter Number	218
	Access Rule	Get/Set
	Data Type	UINT
	Object Mapping	0Fhex-DA-01
	Group	Voltage Setup
	Units	Volts
	Minimum Value	0
	Maximum Value	65535
	Default Value	400

OV Inhibit Time This parameter defines the amount of time for which an over voltage detection is inhibited during a motor starting sequence.	Parameter Number	219
	Access Rule	Get/Set
	Data Type	USINT
	Object Mapping	0Fhex-DB-01
	Group	Voltage Setup
	Units	Seconds
	Minimum Value	0
	Maximum Value	250
	Default Value	10

OV Trip Delay This parameter allows the installer to program a time duration for which an over voltage condition must exist prior to the device tripping.	Parameter Number	220
	Access Rule	Get/Set
	Data Type	USINT
	Object Mapping	0Fhex-DC-01
	Group	Voltage Setup
	Units	Seconds
	Minimum Value	0.1
	Maximum Value	25.0
	Default Value	1.0

OV Trip Level This parameter sets the over voltage trip level.	Parameter Number	221
	Access Rule	Get/Set
	Data Type	UINT
	Object Mapping	0Fhex-DD-01
	Group	Voltage Setup
	Units	Volts
	Minimum Value	0
	Maximum Value	65535
	Default Value	500

OV Warn Level This parameter sets the over voltage warning level.	Parameter Number	222
	Access Rule	Get/Set
	Data Type	UINT
	Object Mapping	0Fhex-DE-01
	Group	Voltage Setup
	Units	Volts
	Minimum Value	0
	Maximum Value	65535
	Default Value	490

Ph Rot Inhibit Time This parameter defines the amount of time for which an improper phase rotation detection is inhibited during a motor starting sequence.	Parameter Number	223
	Access Rule	Get/Set
	Data Type	USINT
	Object Mapping	0Fhex-DF-01
	Group	Voltage Setup
	Units	Seconds
	Minimum Value	0
	Maximum Value	250
	Default Value	10

Ph Rot Trip This parameter sets the rotation trip and warning direction.	Parameter Number	224
	Access Rule	Get/Set
	Data Type	USINT
	Object Mapping	0Fhex-E0-01
	Group	Voltage Setup
	Units	1 = ABC 2 = ACB
	Minimum Value	1
	Maximum Value	2
	Default Value	1

V UnbalInhib Time This parameter defines the amount of time for which voltage unbalance detection is inhibited during a motor starting sequence.	Parameter Number	229
	Access Rule	Get/Set
	Data Type	USINT
	Object Mapping	0Fhex-E5-01
	Group	Voltage Setup
	Units	Seconds
	Minimum Value	0
	Maximum Value	250
	Default Value	10

V UnbalTripDelay This parameter allows the installer to program a time duration for which a voltage unbalance condition must exist prior to the device tripping.	Parameter Number	230
	Access Rule	Get/Set
	Data Type	USINT
	Object Mapping	0Fhex-E6-01
	Group	Voltage Setup
	Units	Seconds
	Minimum Value	0.1
	Maximum Value	25.0
	Default Value	1.0

V UnbalTripLevel This parameter sets the voltage unbalance trip level.	Parameter Number	231
	Access Rule	Get/Set
	Data Type	USINT
	Object Mapping	0Fhex-E7-01
	Group	Voltage Setup
	Units	%
	Minimum Value	0
	Maximum Value	100
	Default Value	75

V UnbalWarnLevel This parameter sets the voltage unbalance warning level.	Parameter Number	232
	Access Rule	Get/Set
	Data Type	USINT
	Object Mapping	0Fhex-E8-01
	Group	Voltage Setup
	Units	Volts
	Minimum Value	0
	Maximum Value	100
	Default Value	85

UF Inhibit Time This parameter defines the amount of time for which an under frequency detection is inhibited during a motor starting sequence.	Parameter Number	233
	Access Rule	Get/Set
	Data Type	USINT
	Object Mapping	0Fhex-E9-01
	Group	Voltage Setup
	Units	Seconds
	Minimum Value	0
	Maximum Value	250
	Default Value	10

UF Trip Delay This parameter allows the installer to program a time duration for which an under frequency condition must exist prior to the device tripping.	Parameter Number	234
	Access Rule	Get/Set
	Data Type	USINT
	Object Mapping	0Fhex-EA-01
	Group	Voltage Setup
	Units	Seconds
	Minimum Value	0.1
	Maximum Value	25.0
	Default Value	1.0

UF Trip Level This parameter sets the under frequency trip level.	Parameter Number	235
	Access Rule	Get/Set
	Data Type	USINT
	Object Mapping	0Fhex-EB-01
	Group	Voltage Setup
	Units	Hz
	Minimum Value	0
	Maximum Value	250
	Default Value	57

UF Warn Level This parameter sets the under frequency warning level.	Parameter Number	236
	Access Rule	Get/Set
	Data Type	USINT
	Object Mapping	0Fhex-EC-01
	Group	Voltage Setup
	Units	Hz
	Minimum Value	0
	Maximum Value	250
	Default Value	58

OF Inhibit Time This parameter defines the amount of time for which an over frequency detection is inhibited during a motor starting sequence.	Parameter Number	237
	Access Rule	Get/Set
	Data Type	USINT
	Object Mapping	0Fhex-ED-01
	Group	Voltage Setup
	Units	Seconds
	Minimum Value	0
	Maximum Value	250
	Default Value	10

OF Trip Delay This parameter allows the installer to program a time duration for which an over frequency condition must exist prior to the device tripping.	Parameter Number	238
	Access Rule	Get/Set
	Data Type	USINT
	Object Mapping	0Fhex-EE-01
	Group	Voltage Setup
	Units	Seconds
	Minimum Value	0.1
	Maximum Value	25.0
	Default Value	1.0

OF Trip Level This parameter sets the over frequency trip level.	Parameter Number	239
	Access Rule	Get/Set
	Data Type	USINT
	Object Mapping	0Fhex-EF-01
	Group	Voltage Setup
	Units	Hz
	Minimum Value	0
	Maximum Value	250
	Default Value	63

OF Warn Level This parameter sets the over frequency warning level.	Parameter Number	240
	Access Rule	Get/Set
	Data Type	USINT
	Object Mapping	0Fhex-F0-01
	Group	Voltage Setup
	Units	Hz
	Minimum Value	0
	Maximum Value	62
	Default Value	58

PT Pri This parameter sets the primary winding value of the potential transformer being used to step down a voltage signal that is being measured. Only used on the 193-EC5ZZ (9…5000 A)	Parameter Number	289
	Access Rule	Get/Set
	Data Type	UINT
	Object Mapping	0Fhex-121-01
	Group	Voltage Setup
	Units	Volts
	Minimum Value	1
	Maximum Value	65535
	Default Value	480

PT Sec This parameter sets the secondary winding value of the potential transformer being used to step down a voltage signal that is being measured. Only used on the 193-EC5ZZ (9…5000 A)	Parameter Number	290
	Access Rule	Get/Set
	Data Type	UINT
	Object Mapping	0Fhex-122-01
	Group	Voltage Setup
	Units	Volts
	Minimum Value	1
	Maximum Value	540
	Default Value	480

Power Parameters

Introduction

The E3 Plus model EC5 offers power based motor protection. This model also provides maintenance personnel with power based diagnostic information when investigating an unplanned shut down or performing energy management. This chapter provides information for the power monitoring and setup parameters for the E3 Plus Overload Relay model EC5.

Phase Power Reporting

Power Range

The E3 Plus model EC5 provides power based diagnostic information that includes real power (kW), reactive power (kVAR), apparent power (kVA), and power factor (PF). The relay also provides energy based diagnostic information that includes kWh, kVARh, kVAh, kW Demand, kVAR Demand, and kVA Demand. The relay is capable of sensing power and energy ranging from 0V L-L to 690V L-L for frequencies ranging from 20 Hz to 250 Hz. The relay supports the following voltage systems:

- Single Phase (2 Wire)
- Delta (Direct Connection)
- Wye (Direct Connection)
- Open Delta (with 2 Potential Transformers)
- Delta with PT (with 3 Potential Transformers)

The E3 Plus model EC5 is intended to be used in applications that represent quadrants I and IV of the power circle shown in Explanation of Power Parameter Signs

Figure 1: Explanation of Power Parameter Signs

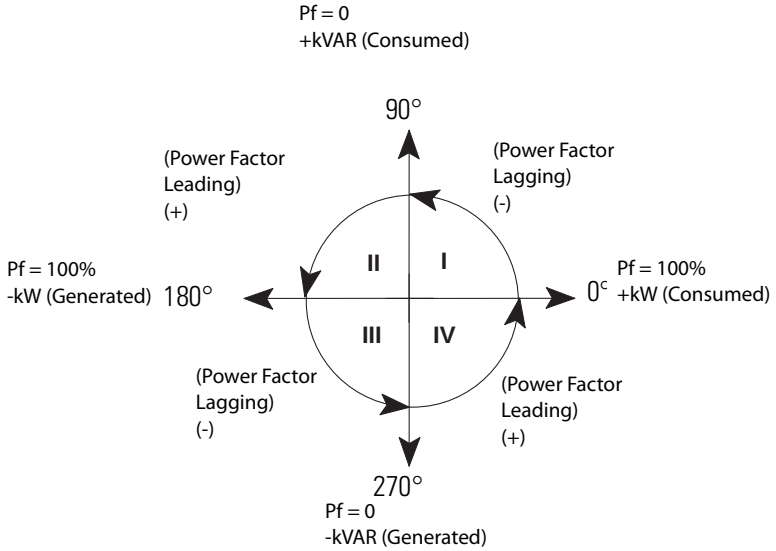

IMPORTANT	The E3 Plus model EC5 will report 0 for all power based parameters if the voltage is below 50V L-L .

IMPORTANT	The E3 Plus model EC5 is capable of reporting power values when the voltage is greater than 690V L-L and for frequencies less than 40 Hz or greater than 80 Hz; however, the accuracy of the value may be compromised.

The following chart illustrates the reported power parameters based on the chosen voltage mode. Parameters that do not have an "**X**" will report 0.

Table 6: Power Reporting Summary

Parameter Name	Single Phase	Delta	Wye	Open Delta ❶	Delta with PT
L1 Real Power (kW)	X		X		
L2 Real Power (kW)	X		X		
L3 Real Power (kW)			X		
Total Real Power (kW)	X	X	X	X	
L1 Reactive Power (kVAR)	X		X		
L2 Reactive Power (kVAR)	X		X		
L3 Reactive Power (kVAR)			X		
Total Reactive Power (kVAR)	X	X	X	X	
L1 Apparent Power (kVA)	X		X		
L2 Apparent Power (kVA)	X		X		
L3 Apparent Power (kVA)			X		
Total Apparent Power (kVA)	X	X	X	X	X
L1 Power Factor (PF)	X		X		
L2 Power Factor (PF)	X		X		
L3 Power Factor (PF)			X		
Total Power Factor (PF)	X	X	X	X	
kWh		X	X	X	
kVARh Consumed	X	X	X	X	
kVARh Generated	X	X	X		

Table 6: Power Reporting Summary

Parameter Name	Single Phase	Delta	Wye	Open Delta ❶	Delta with PT
kVARh Net	X	X	X	X	
kVAh	X	X	X	X	X
kW Demand	X	X	X	X	
Max kW Demand	X	X	X	X	
kVAR Demand	X	X	X	X	
Max kVAR Demand	X	X	X	X	
kVA Demand	X	X	X	X	X
Max kVA Demand	X	X	X	X	X

❶ Open Delta mode only calculates reactive power consumed.

Power Accuracy

Table 7: Power Reporting Accuracy

Operating Range	Parameter	Accuracy
Min FLA … Max FLA 50 V L-L … 690V L-L 50 Hz & 60Hz	Apparent Power	9%

Power Monitor Group

L1 Real Power This parameter provides the real power (kW) measured in L1 with measurement in kiloWatts.	Parameter Number	173
	Access Rule	Get
	Data Type	INT
	Object Mapping	0Fhex-AD-01
	Group	Power Monitor
	Units	kW
	Minimum Value	-32768
	Maximum Value	32767
	Default Value	—

L2 Real Power This parameter provides the real power (kW) measured in L2 with measurement in kiloWatts.	Parameter Number	174
	Access Rule	Get
	Data Type	INT
	Object Mapping	0Fhex-AE-01
	Group	Power Monitor
	Units	kW
	Minimum Value	-32768
	Maximum Value	32767
	Default Value	—

L3 Real Power This parameter provides the real power (kW) measured in L3 with measurement in kiloWatts.	Parameter Number	175
	Access Rule	Get
	Data Type	INT
	Object Mapping	0Fhex-AF-01
	Group	Power Monitor
	Units	kW
	Minimum Value	-32768
	Maximum Value	32767
	Default Value	—

Total Real Power This parameter provides the total real power (kW) measured in all phases with measurement in kiloWatts.	Parameter Number	176
	Access Rule	Get
	Data Type	INT
	Object Mapping	0Fhex-B0-01
	Group	Power Monitor
	Units	kW
	Minimum Value	-32768
	Maximum Value	32767
	Default Value	—

L1 Reactive Pwr This parameter provides the reactive power (kVAR) measured in L1 with measurement in kiloVolt-Amperes reactive.	Parameter Number	177
	Access Rule	Get
	Data Type	INT
	Object Mapping	0Fhex-B1-01
	Group	Power Monitor
	Units	kW
	Minimum Value	-32768
	Maximum Value	32767
	Default Value	—

L2 Reactive Pwr This parameter provides the reactive power (kVAR) measured in L2 with measurement in kiloVolt-Amperes reactive.	Parameter Number	178
	Access Rule	Get
	Data Type	INT
	Object Mapping	0Fhex-B2-01
	Group	Power Monitor
	Units	kVAR
	Minimum Value	-32768
	Maximum Value	32767
	Default Value	—

L3 Reactive Pwr This parameter provides the reactive power (kVAR) measured in L3 with measurement in kiloVolt-Amperes reactive.	Parameter Number	179
	Access Rule	Get
	Data Type	INT
	Object Mapping	0Fhex-B3-01
	Group	Power Monitor
	Units	kVAR
	Minimum Value	-32768
	Maximum Value	32767
	Default Value	—

Tot Reactive Pwr This parameter provides the total reactive power (kVAR) measured in all phases with measurement in kiloVolt-Amperes reactive.	Parameter Number	180
	Access Rule	Get
	Data Type	INT
	Object Mapping	0Fhex-B4-01
	Group	Power Monitor
	Units	kVAR
	Minimum Value	-32768
	Maximum Value	32767
	Default Value	—

L1 Apparent Pwr This parameter provides the apparent power (kVA) measured in L1 with measurement in kiloVolt-Amperes.	Parameter Number	181
	Access Rule	Get
	Data Type	INT
	Object Mapping	0Fhex-B5-01
	Group	Power Monitor
	Units	kVA
	Minimum Value	-32768
	Maximum Value	32767
	Default Value	—

L2 Apparent Pwr This parameter provides the apparent power (kVA) measured in L2 with measurement in kiloVolt-Amperes.	Parameter Number	182
	Access Rule	Get
	Data Type	INT
	Object Mapping	0Fhex-B6-01
	Group	Power Monitor
	Units	kVA
	Minimum Value	-32768
	Maximum Value	32767
	Default Value	—

L3 Apparent Pwr This parameter provides the apparent power (kVA) measured in L3 with measurement in kiloVolt-Amperes.	Parameter Number	183
	Access Rule	Get
	Data Type	INT
	Object Mapping	0Fhex-B7-01
	Group	Power Monitor
	Units	kVA
	Minimum Value	-32768
	Maximum Value	32767
	Default Value	—

Tot Apparent Pwr This parameter provides the total apparent power (kVA) measured in all phases with measurement in kiloVolt-Amperes.	Parameter Number	184
	Access Rule	Get
	Data Type	INT
	Object Mapping	0Fhex-B8-01
	Group	Power Monitor
	Units	kVA
	Minimum Value	-32768
	Maximum Value	32767
	Default Value	—

L1 PF This parameter provides the power factor measured in L1 with measurement in percentage.	Parameter Number	185
	Access Rule	Get
	Data Type	SINT
	Object Mapping	0Fhex-B9-01
	Group	Power Monitor
	Units	%
	Minimum Value	-100
	Maximum Value	100
	Default Value	—

L2 PF This parameter provides the power factor measured in L2 with measurement in percentage.	Parameter Number	186
	Access Rule	Get
	Data Type	SINT
	Object Mapping	0Fhex-BA-01
	Group	Power Monitor
	Units	%
	Minimum Value	-100
	Maximum Value	100
	Default Value	—

L3 PF This parameter provides the power factor measured in L3 with measurement in percentage.	Parameter Number	187
	Access Rule	Get
	Data Type	SINT
	Object Mapping	0Fhex-BB-01
	Group	Power Monitor
	Units	%
	Minimum Value	-100
	Maximum Value	100
	Default Value	—

Total PF This parameter provides the total power factor averaged from all phases with measurement in percentage.	Parameter Number	188
	Access Rule	Get
	Data Type	SINT
	Object Mapping	0Fhex-BC-01
	Group	Power Monitor
	Units	%
	Minimum Value	-100
	Maximum Value	100
	Default Value	—

kWh 10E6 This parameter provides a component of total real energy (kWh). Multiply this value by 10^6 and add to the other kWh parameters. Represents **XXX**,*000,000.000*	Parameter Number	189
	Access Rule	Get
	Data Type	INT
	Object Mapping	0Fhex-BD-01
	Group	Power Monitor
	Units	
	Minimum Value	-32768
	Maximum Value	32767
	Default Value	—

kWh 10E3 This parameter provides a component of total real energy (kWh). Multiply this value by 10^3 and add to the other kWh parameters. Represents *000*,**XXX**,*000.000*	Parameter Number	190
	Access Rule	Get
	Data Type	INT
	Object Mapping	0Fhex-BE-01
	Group	Power Monitor
	Units	
	Minimum Value	-999
	Maximum Value	999
	Default Value	—

kWh 10E0 This parameter provides a component of total real energy (kWh). Multiply this value by 10^0 and add to the other kWh parameters. Represents *000,000,**XXX**.000*	Parameter Number	191
	Access Rule	Get
	Data Type	INT
	Object Mapping	0Fhex-BF-01
	Group	Power Monitor
	Units	
	Minimum Value	-999
	Maximum Value	999
	Default Value	—

kWh 10E-3 This parameter provides a component of total real energy (kWh). Multiply this value by 10^{-3} and add to the other kWh parameters. Represents *000,000,000.**XXX***	Parameter Number	192
	Access Rule	Get
	Data Type	INT
	Object Mapping	0Fhex-C0-01
	Group	Power Monitor
	Units	
	Minimum Value	-999
	Maximum Value	999
	Default Value	—

kVARh Con 10E6 This parameter provides a component of total reactive energy consumed (kVARh). Multiply this value by 10^6 and add to the other kVARh consumed parameters. Represents ***XXX**,000,000.000*	Parameter Number	193
	Access Rule	Get
	Data Type	INT
	Object Mapping	0Fhex-C1-01
	Group	Power Monitor
	Units	
	Minimum Value	-32768
	Maximum Value	32767
	Default Value	—

kVARh Con 10E3 This parameter provides a component of total reactive energy consumed (kVARh). Multiply this value by 10^3 and add to the other kVARh consumed parameters. Represents *000,**XXX**,000.000*	Parameter Number	194
	Access Rule	Get
	Data Type	INT
	Object Mapping	0Fhex-C2-01
	Group	Power Monitor
	Units	
	Minimum Value	-999
	Maximum Value	999
	Default Value	—

kVARh Con 10E0 This parameter provides a component of total reactive energy consumed (kVARh). Multiply this value by 10^0 and add to the other kVARh consumed parameters. Represents *000,000,**XXX**.000*	Parameter Number	195
	Access Rule	Get
	Data Type	INT
	Object Mapping	0Fhex-C3-01
	Group	Power Monitor
	Units	
	Minimum Value	-999
	Maximum Value	999
	Default Value	—

kVARh Con 10E-3 This parameter provides a component of total reactive energy consumed (kVARh). Multiply this value by 10^{-3} and add to the other kVARh consumed parameters. Represents *000,000,000.**XXX***	Parameter Number	196
	Access Rule	Get
	Data Type	INT
	Object Mapping	0Fhex-C4-01
	Group	Power Monitor
	Units	
	Minimum Value	-999
	Maximum Value	999
	Default Value	—

kVARh Gen 10E6 This parameter provides a component of total reactive energy generated (kVARh). Multiply this value by 10^{6} and add to the other kVARh generated parameters. Represents ***XXX**,000,000.000*	Parameter Number	197
	Access Rule	Get
	Data Type	INT
	Object Mapping	0Fhex-C5-01
	Group	Power Monitor
	Units	
	Minimum Value	-32768
	Maximum Value	32767
	Default Value	—

kVARh Gen 10E3 This parameter provides a component of total reactive energy generated (kVARh). Multiply this value by 10^{3} and add to the other kVARh generated parameters. Represents *000,**XXX**,000.000*	Parameter Number	198
	Access Rule	Get
	Data Type	INT
	Object Mapping	0Fhex-C6-01
	Group	Power Monitor
	Units	
	Minimum Value	-999
	Maximum Value	999
	Default Value	—

kVARh Gen 10E0 This parameter provides a component of total reactive energy generated (kVARh). Multiply this value by 10^{0} and add to the other kVARh generated parameters. Represents *000,000,**XXX**.000*	Parameter Number	199
	Access Rule	Get
	Data Type	INT
	Object Mapping	0Fhex-C7-01
	Group	Power Monitor
	Units	
	Minimum Value	-999
	Maximum Value	999
	Default Value	—

kVARh Gen 10E-3 This parameter provides a component of total reactive energy generated (kVARh). Multiply this value by 10^{-3} and add to the other kVARh generated parameters. Represents *000,000,000.**XXX***	Parameter Number	200
	Access Rule	Get
	Data Type	INT
	Object Mapping	0Fhex-C8-01
	Group	Power Monitor
	Units	
	Minimum Value	-999
	Maximum Value	999
	Default Value	—

kVARh Net 10E6 This parameter provides a component of total reactive energy net (kVARh). Multiply this value by 10^6 and add to the other kVARh net parameters. Represents **XXX**,*000,000.000*	Parameter Number	201
	Access Rule	Get
	Data Type	INT
	Object Mapping	0Fhex-C9-01
	Group	Power Monitor
	Units	
	Minimum Value	-32768
	Maximum Value	32767
	Default Value	—

kVARh Net 10E3 This parameter provides a component of total reactive energy net (kVARh). Multiply this value by 10^3 and add to the other kVARh net parameters. Represents *000,***XXX**,*000.000*	Parameter Number	202
	Access Rule	Get
	Data Type	INT
	Object Mapping	0Fhex-CA-01
	Group	Power Monitor
	Units	
	Minimum Value	-999
	Maximum Value	999
	Default Value	—

kVARh Net 10E0 This parameter provides a component of total reactive energy net (kVARh). Multiply this value by 10^0 and add to the other kVARh net parameters. Represents *000,000,***XXX**.*000*	Parameter Number	203
	Access Rule	Get
	Data Type	INT
	Object Mapping	0Fhex-CB-01
	Group	Power Monitor
	Units	
	Minimum Value	-999
	Maximum Value	999
	Default Value	—

kVARh Net 10E-3 This parameter provides a component of total reactive energy net (kVARh). Multiply this value by 10^{-3} and add to the other kVARh net parameters. Represents *000,000,000.***XXX**	Parameter Number	204
	Access Rule	Get
	Data Type	INT
	Object Mapping	0Fhex-CC-01
	Group	Power Monitor
	Units	
	Minimum Value	-999
	Maximum Value	999
	Default Value	—

kVAh Net 10E6 This parameter provides a component of total apparent energy (kVAh). Multiply this value by 10^6 and add to the other kVAh parameters. Represents **XXX**,*000,000.000*	Parameter Number	205
	Access Rule	Get
	Data Type	INT
	Object Mapping	0Fhex-CD-01
	Group	Power Monitor
	Units	
	Minimum Value	-32768
	Maximum Value	32767
	Default Value	—

kVAh Net 10E3 This parameter provides a component of total apparent energy (kVAh). Multiply this value by 10^3 and add to the other kVAh parameters. Represents *000,**XXX**,000.000*	Parameter Number	206
	Access Rule	Get
	Data Type	INT
	Object Mapping	0Fhex-CE-01
	Group	Power Monitor
	Units	
	Minimum Value	-999
	Maximum Value	999
	Default Value	—

kVAh Net 10E0 This parameter provides a component of total apparent energy (kVAh). Multiply this value by 10^0 and add to the other kVAh parameters. Represents *000,000,**XXX**.000*	Parameter Number	207
	Access Rule	Get
	Data Type	INT
	Object Mapping	0Fhex-CF-01
	Group	Power Monitor
	Units	
	Minimum Value	-999
	Maximum Value	999
	Default Value	—

kVAh Net 10E-3 This parameter provides a component of total apparent energy (kVAh). Multiply this value by 10^{-3} and add to the other kVAh parameters. Represents *000,000,000.**XXX***	Parameter Number	208
	Access Rule	Get
	Data Type	INT
	Object Mapping	0Fhex-D0-01
	Group	Power Monitor
	Units	
	Minimum Value	-999
	Maximum Value	999
	Default Value	—

kW Demand This parameter provides kW Demand which is the average real energy usage over a defined period of time.	Parameter Number	209
	Access Rule	Get
	Data Type	INT
	Object Mapping	0Fhex-D1-01
	Group	Power Monitor
	Units	kW
	Minimum Value	-32768
	Maximum Value	32767
	Default Value	—

Max kW Demand This parameter provides maximum kW Demand.	Parameter Number	210
	Access Rule	Get
	Data Type	INT
	Object Mapping	0Fhex-D2-01
	Group	Power Monitor
	Units	kW
	Minimum Value	-32768
	Maximum Value	32767
	Default Value	—

VAR Demand This parameter provides kVAR Demand which is the average reactive energy usage over a defined period of time.	Parameter Number	211
	Access Rule	Get
	Data Type	INT
	Object Mapping	0Fhex-D3-01
	Group	Power Monitor
	Units	kVAR
	Minimum Value	-32768
	Maximum Value	32767
	Default Value	—

Max VAR Demand This parameter provides maximum kVAR Demand.	Parameter Number	212
	Access Rule	Get
	Data Type	INT
	Object Mapping	0Fhex-D4-01
	Group	Power Monitor
	Units	kVAR
	Minimum Value	-32768
	Maximum Value	32767
	Default Value	—

VA Dmnd This parameter provides kVA Demand which is the average apparent energy usage over a defined period of time.	Parameter Number	213
	Access Rule	Get
	Data Type	INT
	Object Mapping	0Fhex-D5-01
	Group	Power Monitor
	Units	kVA
	Minimum Value	0
	Maximum Value	32767
	Default Value	—

Max VA Dmnd This parameter provides maximum kVA Demand.	Parameter Number	214
	Access Rule	Get
	Data Type	INT
	Object Mapping	0Fhex-D6-01
	Group	Power Monitor
	Units	kVAR
	Minimum Value	0
	Maximum Value	32767
	Default Value	—

PW Trip Status		
This parameter provides power based trip identification as outlined in the table below: 1 = Trip 0 = No TrIp	Parameter Number	227
	Access Rule	Get
	Data Type	UINT
	Object Mapping	0Fhex-E3-01
	Group	Power Monitor
	Units	—
	Minimum Value	—
	Maximum Value	—
	Default Value	—

Bit																**Function:**
15	**14**	**13**	**12**	**11**	**10**	**9**	**8**	**7**	**6**	**5**	**4**	**3**	**2**	**1**	**0**	
															X	Under Real Pwr
														X		Over Real Pwr
													X			Under Con kVAR
												X				Over Con kVAR
											X					Under Gen kVAR
										X						Over Gen kVAR
									X							Under Power kVA
								X								Over Power kVA
							X									Under PF Lagging
						X										Over PF Lagging
					X											Under PF Leading
				X												Over PF Leading
			X													Power Overflow

PW Warn Status		
This parameter provides power based warning identification as outlined in the table below: 1 = Warning 0 = No Warning	Parameter Number	228
	Access Rule	Get
	Data Type	UINT
	Object Mapping	0Fhex-E4-01
	Group	Power Monitor
	Units	—
	Minimum Value	—
	Maximum Value	—
	Default Value	—

Bit																**Function:**
15	**14**	**13**	**12**	**11**	**10**	**9**	**8**	**7**	**6**	**5**	**4**	**3**	**2**	**1**	**0**	
															X	Under Real Pwr
														X		Over Real Pwr
													X			Under Con kVAR
												X				Over Con kVAR
											X					Under Gen kVAR
										X						Over Gen kVAR
									X							Under Power kVA
								X								Over Power kVA
							X									Under PF Lagging
						X										Over PF Lagging
					X											Under PF Leading
				X												Over PF Leading
			X													Power Overflow

Power Setup Group

PW Trip Enable

This parameter allows the installer to enable or disable power based trip functions separately.

1 = Trip
0 = No Trlp

Parameter Number	225
Access Rule	Get/Set
Data Type	UINT
Object Mapping	0Fhex-E1-01
Group	Power Setup
Units	—
Minimum Value	—
Maximum Value	—
Default Value	—

Bit																Function:
15	14	13	12	11	10	9	8	7	6	5	4	3	2	1	0	
															X	Under Real Pwr
														X		Over Real Pwr
													X			Under Con kVAR
												X				Over Con kVAR
											X					Under Gen kVAR
										X						Over Gen kVAR
									X							Under Power kVA
								X								Over Power kVA
							X									Under PF Lagging
						X										Over PF Lagging
					X											Under PF Leading
				X												Over PF Leading
			X													Power Overflow

PW Warn Enable

This parameter allows the installer to enable or disable power based warning functions separately.

1 = Warning
0 = No Warning

Parameter Number	226
Access Rule	Get/Set
Data Type	UINT
Object Mapping	0Fhex-E2-01
Group	Power Setup
Units	—
Minimum Value	—
Maximum Value	—
Default Value	—

Bit																Function:
15	14	13	12	11	10	9	8	7	6	5	4	3	2	1	0	
															X	Under Real Pwr
														X		Over Real Pwr
													X			Under Con kVAR
												X				Over Con kVAR
											X					Under Gen kVAR
										X						Over Gen kVAR
									X							Under Power kVA
								X								Over Power kVA
							X									Under PF Lagging
						X										Over PF Lagging
					X											Under PF Leading
				X												Over PF Leading
			X													Power Overflow

UW Inhibit Time This parameter defines the amount of time for which an under real power (kW) detection is inhibited during a motor starting sequence.	Parameter Number	241
	Access Rule	Get/Set
	Data Type	USINT
	Object Mapping	0Fhex-F1-01
	Group	Power Setup
	Units	Seconds
	Minimum Value	0
	Maximum Value	250
	Default Value	10

UW Trip Delay This parameter allows the installer to program a time duration for which an under real power (kW) condition must exist prior to the device tripping.	Parameter Number	242
	Access Rule	Get/Set
	Data Type	USINT
	Object Mapping	0Fhex-F2-01
	Group	Power Setup
	Units	Seconds
	Minimum Value	0.1
	Maximum Value	25.0
	Default Value	1.0

UW Trip Level This parameter sets the under real power (kW) trip level.	Parameter Number	243
	Access Rule	Get/Set
	Data Type	INT
	Object Mapping	0Fhex-F3-01
	Group	Power Setup
	Units	kW
	Minimum Value	0
	Maximum Value	32767
	Default Value	—

UV Warn Level This parameter sets the under real power (kW) warning level.	Parameter Number	244
	Access Rule	Get/Set
	Data Type	INT
	Object Mapping	0Fhex-F4-01
	Group	Power Setup
	Units	kW
	Minimum Value	0
	Maximum Value	32767
	Default Value	—

OW Inhibit Time This parameter defines the amount of time for which an over real power (kW) detection is inhibited during a motor starting sequence.	Parameter Number	245
	Access Rule	Get/Set
	Data Type	USINT
	Object Mapping	0Fhex-F5-01
	Group	Power Setup
	Units	Seconds
	Minimum Value	0
	Maximum Value	250
	Default Value	10

OW Trip Delay This parameter allows the installer to program a time duration for which an over real power (kW) condition must exist prior to the device tripping.	Parameter Number	246
	Access Rule	Get/Set
	Data Type	USINT
	Object Mapping	0Fhex-F6-01
	Group	Power Setup
	Units	Seconds
	Minimum Value	0.1
	Maximum Value	25.0
	Default Value	1.0

OW Trip Level This parameter sets the over real power (kW) trip level.	Parameter Number	247
	Access Rule	Get/Set
	Data Type	INT
	Object Mapping	0Fhex-F7-01
	Group	Power Setup
	Units	kW
	Minimum Value	0
	Maximum Value	32767
	Default Value	—

OW Warn Level This parameter sets the over real power (kW) warning level.	Parameter Number	248
	Access Rule	Get/Set
	Data Type	INT
	Object Mapping	0Fhex-F8-01
	Group	Power Setup
	Units	kW
	Minimum Value	0
	Maximum Value	32767
	Default Value	—

UVARC Inhibit Time This parameter defines the amount of time for which an under reactive power (kVAR) consumed detection is inhibited during a motor starting sequence.	Parameter Number	249
	Access Rule	Get/Set
	Data Type	USINT
	Object Mapping	0Fhex-F9-01
	Group	Power Setup
	Units	Seconds
	Minimum Value	0
	Maximum Value	250
	Default Value	10

UVARC Trip Delay This parameter allows the installer to program a time duration for which an under reactive power (kVAR) consumed condition must exist prior to the device tripping.	Parameter Number	250
	Access Rule	Get/Set
	Data Type	USINT
	Object Mapping	0Fhex-FA-01
	Group	Power Setup
	Units	Seconds
	Minimum Value	0.1
	Maximum Value	25.0
	Default Value	1.0

UVARC Trip Level This parameter sets the under reactive power (kVAR) consumed trip level.	Parameter Number	251
	Access Rule	Get/Set
	Data Type	INT
	Object Mapping	0Fhex-FB-01
	Group	Power Setup
	Units	kVAR
	Minimum Value	0
	Maximum Value	32767
	Default Value	—

UVARC Warn Level This parameter sets the under reactive power (kVAR) consumed warning level.	Parameter Number	252
	Access Rule	Get/Set
	Data Type	INT
	Object Mapping	0Fhex-FC-01
	Group	Power Setup
	Units	kVAR
	Minimum Value	0
	Maximum Value	32767
	Default Value	—

OVARC Inhibit Time This parameter defines the amount of time for which an over reactive power (kVAR) consumed detection is inhibited during a motor starting sequence.	Parameter Number	253
	Access Rule	Get/Set
	Data Type	USINT
	Object Mapping	0Fhex-FD-01
	Group	Power Setup
	Units	Seconds
	Minimum Value	0
	Maximum Value	250
	Default Value	10

OVARC Trip Delay This parameter allows the installer to program a time duration for which an over reactive power (kVAR) consumed condition must exist prior to the device tripping.	Parameter Number	254
	Access Rule	Get/Set
	Data Type	USINT
	Object Mapping	0Fhex-FE-01
	Group	Power Setup
	Units	Seconds
	Minimum Value	0.1
	Maximum Value	25.0
	Default Value	1.0

OVARC Trip Level This parameter sets the over reactive power (kVAR) consumed trip level.	Parameter Number	255
	Access Rule	Get/Set
	Data Type	INT
	Object Mapping	0Fhex-FF-01
	Group	Power Setup
	Units	kVAR
	Minimum Value	0
	Maximum Value	32767
	Default Value	—

OVARC Warn Level This parameter sets the over reactive power (kVAR) consumed warning level.	Parameter Number	256
	Access Rule	Get/Set
	Data Type	INT
	Object Mapping	0Fhex-100-01
	Group	Power Setup
	Units	kVAR
	Minimum Value	0
	Maximum Value	32767
	Default Value	—

UVARG Inhibit Time This parameter defines the amount of time for which an under reactive power (kVAR) generated detection is inhibited during a motor starting sequence.	Parameter Number	257
	Access Rule	Get/Set
	Data Type	USINT
	Object Mapping	0Fhex-101-01
	Group	Power Setup
	Units	Seconds
	Minimum Value	0
	Maximum Value	250
	Default Value	10

UVARG Trip Delay This parameter allows the installer to program a time duration for which an under reactive power (kVAR) generated condition must exist prior to the device tripping.	Parameter Number	258
	Access Rule	Get/Set
	Data Type	USINT
	Object Mapping	0Fhex-102-01
	Group	Power Setup
	Units	Seconds
	Minimum Value	0.1
	Maximum Value	25.0
	Default Value	1.0

UVARG Trip Level This parameter sets the under reactive power (kVAR) generated trip level.	Parameter Number	259
	Access Rule	Get/Set
	Data Type	INT
	Object Mapping	0Fhex-103-01
	Group	Power Setup
	Units	kVAR
	Minimum Value	-32768
	Maximum Value	0
	Default Value	—

UVARG Warn Level This parameter sets the under reactive power (kVAR) generated warning level.	Parameter Number	260
	Access Rule	Get/Set
	Data Type	INT
	Object Mapping	0Fhex-104-01
	Group	Power Setup
	Units	kVAR
	Minimum Value	-32768
	Maximum Value	0
	Default Value	—

OVARG Inhibit Time This parameter defines the amount of time for which an over reactive power (kVAR) generated detection is inhibited during a motor starting sequence.	Parameter Number	261
	Access Rule	Get/Set
	Data Type	USINT
	Object Mapping	0Fhex-105-01
	Group	Power Setup
	Units	Seconds
	Minimum Value	0
	Maximum Value	250
	Default Value	10

OVARG Trip Delay This parameter allows the installer to program a time duration for which an over reactive power (kVAR) generated condition must exist prior to the device tripping.	Parameter Number	262
	Access Rule	Get/Set
	Data Type	USINT
	Object Mapping	0Fhex-106-01
	Group	Power Setup
	Units	Seconds
	Minimum Value	0.1
	Maximum Value	25.0
	Default Value	1.0

OVARG Trip Level This parameter sets the over reactive power (kVAR) generated trip level.	Parameter Number	263
	Access Rule	Get/Set
	Data Type	INT
	Object Mapping	0Fhex-107-01
	Group	Power Setup
	Units	kVAR
	Minimum Value	-32768
	Maximum Value	0
	Default Value	—

OVARG Warn Level This parameter sets the over reactive power (kVAR) generated warning level.	Parameter Number	264
	Access Rule	Get/Set
	Data Type	INT
	Object Mapping	0Fhex-108-01
	Group	Power Setup
	Units	kVAR
	Minimum Value	-32768
	Maximum Value	0
	Default Value	—

UVA Inhibit Time This parameter defines the amount of time for which an under apparent power (kVA) detection is inhibited during a motor starting sequence.	Parameter Number	265
	Access Rule	Get/Set
	Data Type	USINT
	Object Mapping	0Fhex-109-01
	Group	Power Setup
	Units	Seconds
	Minimum Value	0
	Maximum Value	250
	Default Value	10

UVA Trip Delay This parameter allows the installer to program a time duration for which an under apparent power (kVA) condition must exist prior to the device tripping.	Parameter Number	266
	Access Rule	Get/Set
	Data Type	USINT
	Object Mapping	0Fhex-10A-01
	Group	Power Setup
	Units	Seconds
	Minimum Value	0.1
	Maximum Value	25.0
	Default Value	1.0

UVA Trip Level This parameter sets the under apparent power (kVA) trip level.	Parameter Number	267
	Access Rule	Get/Set
	Data Type	INT
	Object Mapping	0Fhex-10B-01
	Group	Power Setup
	Units	kVA
	Minimum Value	0
	Maximum Value	32767
	Default Value	—

UVA Warn Level This parameter sets the under apparent power (kVA) warning level.	Parameter Number	268
	Access Rule	Get/Set
	Data Type	INT
	Object Mapping	0Fhex-10C-01
	Group	Power Setup
	Units	kVA
	Minimum Value	0
	Maximum Value	32767
	Default Value	—

OVA Inhibit Time This parameter defines the amount of time for which an over apparent power (kVA) detection is inhibited during a motor starting sequence.	Parameter Number	269
	Access Rule	Get/Set
	Data Type	USINT
	Object Mapping	0Fhex-10D-01
	Group	Power Setup
	Units	Seconds
	Minimum Value	0
	Maximum Value	250
	Default Value	10

OVA Trip Delay This parameter allows the installer to program a time duration for which an over apparent power (kVA) condition must exist prior to the device tripping.	Parameter Number	270
	Access Rule	Get/Set
	Data Type	USINT
	Object Mapping	0Fhex-10E-01
	Group	Power Setup
	Units	Seconds
	Minimum Value	0.1
	Maximum Value	25.0
	Default Value	1.0

OVA Trip Level This parameter sets the over apparent power (kVA) trip level.	Parameter Number	271
	Access Rule	Get/Set
	Data Type	INT
	Object Mapping	0Fhex-10F-01
	Group	Power Setup
	Units	kVA
	Minimum Value	0
	Maximum Value	32767
	Default Value	—

OVA Warn Level This parameter sets the over apparent power (kVA) warning level.	Parameter Number	272
	Access Rule	Get/Set
	Data Type	INT
	Object Mapping	0Fhex-110-01
	Group	Power Setup
	Units	kVA
	Minimum Value	0
	Maximum Value	32767
	Default Value	—

UPFLG Inhibit Time This parameter defines the amount of time for which an under power factor lagging detection is inhibited during a motor starting sequence.	Parameter Number	273
	Access Rule	Get/Set
	Data Type	USINT
	Object Mapping	0Fhex-111-01
	Group	Power Setup
	Units	Seconds
	Minimum Value	0
	Maximum Value	250
	Default Value	10

UPFLG Trip Delay This parameter allows the installer to program a time duration for which an under power factor lagging condition must exist prior to the device tripping.	Parameter Number	274
	Access Rule	Get/Set
	Data Type	USINT
	Object Mapping	0Fhex-112-01
	Group	Power Setup
	Units	Seconds
	Minimum Value	0.1
	Maximum Value	25.0
	Default Value	1.0

UPFLG Trip Level This parameter sets the under power factor lagging trip level.	Parameter Number	275
	Access Rule	Get/Set
	Data Type	SINT
	Object Mapping	0Fhex-113-01
	Group	Power Setup
	Units	%
	Minimum Value	-100
	Maximum Value	0
	Default Value	-90

UPFLG Warn Level This parameter sets the under power factor lagging warning level.	Parameter Number	276
	Access Rule	Get/Set
	Data Type	SINT
	Object Mapping	0Fhex-114-01
	Group	Power Setup
	Units	%
	Minimum Value	-100
	Maximum Value	0
	Default Value	-95

OPFLG Inhibit Time This parameter defines the amount of time for which an over power factor lagging detection is inhibited during a motor starting sequence.	Parameter Number	277
	Access Rule	Get/Set
	Data Type	USINT
	Object Mapping	0Fhex-115-01
	Group	Power Setup
	Units	Seconds
	Minimum Value	0
	Maximum Value	250
	Default Value	10

OPFLG Trip Delay This parameter allows the installer to program a time duration for which an over power factor lagging condition must exist prior to the device tripping.	Parameter Number	278
	Access Rule	Get/Set
	Data Type	USINT
	Object Mapping	0Fhex-116-01
	Group	Power Setup
	Units	Seconds
	Minimum Value	0.1
	Maximum Value	25.0
	Default Value	1.0

OPFLG Trip Level This parameter sets the over power factor lagging trip level.	Parameter Number	279
	Access Rule	Get/Set
	Data Type	SINT
	Object Mapping	0Fhex-117-01
	Group	Power Setup
	Units	%
	Minimum Value	-100
	Maximum Value	0
	Default Value	-95

OPFLG Warn Level This parameter sets the over power factor lagging warning level.	Parameter Number	280
	Access Rule	Get/Set
	Data Type	SINT
	Object Mapping	0Fhex-118-01
	Group	Power Setup
	Units	%
	Minimum Value	-100
	Maximum Value	0
	Default Value	-90

UPFLD Inhibit Time This parameter defines the amount of time for which an under power factor leading detection is inhibited during a motor starting sequence.	Parameter Number	281
	Access Rule	Get/Set
	Data Type	USINT
	Object Mapping	0Fhex-119-01
	Group	Power Setup
	Units	Seconds
	Minimum Value	0
	Maximum Value	250
	Default Value	10

UPFLD Trip Delay This parameter allows the installer to program a time duration for which an under power factor leading condition must exist prior to the device tripping.	Parameter Number	282
	Access Rule	Get/Set
	Data Type	USINT
	Object Mapping	0Fhex-11A-01
	Group	Power Setup
	Units	Seconds
	Minimum Value	0.1
	Maximum Value	25.0
	Default Value	1.0

UPFLD Trip Level This parameter sets the under power factor leading trip level.	Parameter Number	283
	Access Rule	Get/Set
	Data Type	SINT
	Object Mapping	0Fhex-11B-01
	Group	Power Setup
	Units	%
	Minimum Value	0
	Maximum Value	100
	Default Value	90

UPFLD Warn Level This parameter sets the under power factor leading warning level.	Parameter Number	284
	Access Rule	Get/Set
	Data Type	SINT
	Object Mapping	0Fhex-11C-01
	Group	Power Setup
	Units	%
	Minimum Value	0
	Maximum Value	100
	Default Value	95

OPFLD Inhibit Time This parameter defines the amount of time for which an over power factor leading detection is inhibited during a motor starting sequence.	Parameter Number	285
	Access Rule	Get/Set
	Data Type	USINT
	Object Mapping	0Fhex-11D-01
	Group	Power Setup
	Units	Seconds
	Minimum Value	0
	Maximum Value	250
	Default Value	10

OPFLD Trip Delay This parameter allows the installer to program a time duration for which an over power factor leading condition must exist prior to the device tripping.	Parameter Number	286
	Access Rule	Get/Set
	Data Type	USINT
	Object Mapping	0Fhex-11E-01
	Group	Power Setup
	Units	Seconds
	Minimum Value	0.1
	Maximum Value	25.0
	Default Value	1.0

OPFLD Trip Level This parameter sets the over power factor leading trip level.	Parameter Number	287
	Access Rule	Get/Set
	Data Type	SINT
	Object Mapping	0Fhex-11F-01
	Group	Power Setup
	Units	%
	Minimum Value	0
	Maximum Value	100
	Default Value	95

OPFLD Warn Level This parameter sets the over power factor leading warning level.	Parameter Number	288
	Access Rule	Get/Set
	Data Type	SINT
	Object Mapping	0Fhex-120-01
	Group	Power Setup
	Units	%
	Minimum Value	0
	Maximum Value	100
	Default Value	90

Demand Period This parameter sets the time period in minutes for which the demand calculation averages energy usage.	Parameter Number	291
	Access Rule	Get/Set
	Data Type	USINT
	Object Mapping	0Fhex-123-01
	Group	Power Setup
	Units	Minutes
	Minimum Value	1
	Maximum Value	255
	Default Value	15

Num of Periods This parameter sets the number of periods to average for the demand calculation.	Parameter Number	292
	Access Rule	Get/Set
	Data Type	USINT
	Object Mapping	0Fhex-124-01
	Group	Power Setup
	Units	—
	Minimum Value	1
	Maximum Value	15
	Default Value	1

Trip History and Snapshot

Trip and Warning History

The E3 Plus Overload Relay with firmware revision 5.01 and higher offers the user programmable Trip History and Warning History diagnostic information. The user can select the specific trip and warning features that get written to the five record Trip History and Warning History.

TripWarn History Group

Trip History 0 This parameter reports the latest trip written to the Trip History. Refer to Table 8.1 for the Trip History record identification.	Parameter Number	132
	Access Rule	Get
	Data Type	UINT
	Object Mapping	0Fhex-84-01
	Group	TripWarn History
	Units	—
	Minimum Value	0
	Maximum Value	48
	Default Value	—

Trip History 1 This parameter reports the trip written to the Trip History previous to Trip History 0. Refer to Table 8.1 for the Trip History record identification.	Parameter Number	133
	Access Rule	Get
	Data Type	UINT
	Object Mapping	0Fhex-85-01
	Group	TripWarn History
	Units	—
	Minimum Value	0
	Maximum Value	48
	Default Value	—

Trip History 2 This parameter reports the trip written to the Trip History previous to Trip History 1. Refer to Table 8.1 for the Trip History record identification.	Parameter Number	134
	Access Rule	Get
	Data Type	UINT
	Object Mapping	0Fhex-86-01
	Group	TripWarn History
	Units	—
	Minimum Value	0
	Maximum Value	48
	Default Value	—

Trip History 3 This parameter reports the trip written to the Trip History previous to Trip History 2. Refer to Table 8.1 for the Trip History record identification.	Parameter Number	135
	Access Rule	Get
	Data Type	UINT
	Object Mapping	0Fhex-87-01
	Group	TripWarn History
	Units	—
	Minimum Value	0
	Maximum Value	48
	Default Value	—

Trip History 4 This parameter reports the trip written to the Trip History previous to Trip History 3. Refer to Table 8.1 for the Trip History record identification.	Parameter Number	136
	Access Rule	Get
	Data Type	UINT
	Object Mapping	0Fhex-88-01
	Group	TripWarn History
	Units	—
	Minimum Value	0
	Maximum Value	48
	Default Value	—

Warn History 0 This parameter reports the latest warning written to the Warning History. Refer to Table 8.1 for the Warning History record identification.	Parameter Number	137
	Access Rule	Get
	Data Type	UINT
	Object Mapping	0Fhex-89-01
	Group	TripWarn History
	Units	—
	Minimum Value	0
	Maximum Value	48
	Default Value	—

Warn History 1 This parameter reports the warning written to the Warning History previous to Warn History 0. Refer to Table 8.1 for the Warning History record identification.	Parameter Number	138
	Access Rule	Get
	Data Type	UINT
	Object Mapping	0Fhex-8A-01
	Group	TripWarn History
	Units	—
	Minimum Value	0
	Maximum Value	48
	Default Value	—

Warn History 2 This parameter reports the warning written to the Warning History previous to Warn History 1. Refer to Table 8.1 for the Warning History record identification.	Parameter Number	139
	Access Rule	Get
	Data Type	UINT
	Object Mapping	0Fhex-8B-01
	Group	TripWarn History
	Units	—
	Minimum Value	0
	Maximum Value	48
	Default Value	—

Warn History 3 This parameter reports the warning written to the Warning History previous to Warn History 2. Refer to Table 8.1 for the Warning History record identification.	Parameter Number	140
	Access Rule	Get
	Data Type	UINT
	Object Mapping	0Fhex-8C-01
	Group	TripWarn History
	Units	—
	Minimum Value	0
	Maximum Value	48
	Default Value	—

Warn History 4 This parameter reports the warning written to the Warning History previous to Warn History 3. Refer to Table 8.1 for the Warning History record identification.	Parameter Number	141
	Access Rule	Get
	Data Type	UINT
	Object Mapping	0Fhex-8D-01
	Group	TripWarn History
	Units	—
	Minimum Value	0
	Maximum Value	48
	Default Value	—

Table 8: Trip & Warning History Fault Codes

Code	Type	Description
0	No Fault	No Fault Conditions Detected
1	Test Trip	Test trip caused by holding the Test/Rest button for 2 seconds
2	Overload	Motor current overload condition
3	Phase Loss	Phase current Loss detected in one of the motor phases
4	Ground Fault	Power conductor or motor winding is shorting to ground
5	Stall	Motor has not reached full speed by the end of Stall Enable Time
6	Jam	Motor current has exceed the programmed jam trip level
7	Underload	Motor current has fallen below normal operating levels
8	PTC	PTC input indicates that the motor stator windings overheated
9	Current Imbal	Phase to phase current imbalance detected
10	Comm Fault	DeviceNet communication loss detected
11	Comm Idle	DeviceNet idle condition detected
12	NonVol Mem	Internal memory failure. Contact the factory.
13	Hardware Fault	Hardware configuration fault. Check for shorts on input terminal
15	Remote Trip	Remote trip command detected
16	Blocked Start	Maximum starts per hour exceeded
17	Voltage Hdw Flt	A problem with the external voltage hardware has been detected
18	Under Volt L-L	Line to Line Under-Voltage condition detected
19	Over Volt L-L	Line to Line Over-Voltage condition detected
20	Voltage Unbal	Phase to phase voltage imbalance detected
21	Phase Rotation	The unit detects the supply voltage phases are rotated
22	Under Frequency	Line voltage frequency is below trip level
23	Over Frequency	Line voltage frequency has exceeded trip level
33	Under Real Pwr	Total Real Power(kW)is below trip level
34	Over Real Pwr	Total Real Power(kW)has exceeded trip level
35	Under Con kVAR	Under Total Reactive Power Consumed (+kVAR) condition detected
36	Over Con kVAR	Over Total Reactive Power Consumed (+kVAR) condition detected
37	Under Gen kVAR	Under Total Reactive Power Generated (-kVAR) condition detected
38	Over Gen kVAR	Over Total Reactive Power Generated (-kVAR) condition detected
39	Under Power kVA	Total Apparent Power (VA or kVA or MVA) is below trip level
40	Over Power kVA	Total Apparent Power (VA or kVA or MVA) exceeded trip level
41	Under PF Lagging	Under Total Power Factor Lagging (-PF) condition detected
42	Over PF Lagging	Over Total Power Factor Lagging (-PF) condition detected
43	Under PF Leading	Under Total Power Factor Leading (+PF) condition detected
44	Over PF Leading	Over Total Power Factor Leading (+PF) condition detected
45	Power Overflow	kW, kVAR or kVA has exceeded its maximum display value

TripHistory Mask This parameter allows the user to configure which current based protection features are written to the five record Trip History as outlined in the table below: 1 = Recorded 0 = Not Recorded	Parameter Number	142
	Access Rule	Get/Set
	Data Type	UINT
	Object Mapping	0Fhex-8E-01
	Group	TripWarn History
	Units	—
	Minimum Value	0000000000000000
	Maximum Value	1111111111111111
	Default Value	1101111101111111

Bit																Function:
15	14	13	12	11	10	9	8	7	6	5	4	3	2	1	0	
															X	Test Trip
														X		Overload
													X			Phase Loss
												X				Ground Fault
											X					Stall
										X						Jam
									X							Underload
								X								Reserved
							X									Current Imbal
						X										Comm Fault
					X											Comm Idle
				X												NonVol Mem
			X													Hardware Fault
		X														Reserved
	X															Remote Trip
X																Bocked Start

WarnHistory Mask

This parameter allows the user to configure which current based protection features are written to the five record Warning History as outlined in the table below:

1 = Recorded
0 = Not Recorded

Parameter Number	143
Access Rule	Get/Set
Data Type	UINT
Object Mapping	0Fhex-8F-01
Group	TripWarn History
Units	—
Minimum Value	0000000000000000
Maximum Value	0111111111111111
Default Value	0111011101101010

Bit																Function:
15	14	13	12	11	10	9	8	7	6	5	4	3	2	1	0	
															X	Reserved
														X		Overload
													X			Phase Loss
												X				Ground Fault
											X					Reserved
										X						Jam
									X							Underload
								X								Reserved
							X									Current Imbal
						X										Comm Fault
					X											Comm Idle
				X												Reserved
			X													Config Fault
		X														PM Starts
	X															PM Oper Hours
																Reserved

V TripHist Mask		
This parameter allows the user to configure which voltage based protection features are written to the five record Trip History as outlined in the table below: 1 = Recorded 0 = Not Recorded	Parameter Number	299
	Access Rule	Get/Set
	Data Type	UINT
	Object Mapping	0Fhex-12B-01
	Group	TripWarn History
	Units	—
	Minimum Value	0000000000000000
	Maximum Value	0000000001111111
	Default Value	0000000001111111

Bit																**Function:**
15	**14**	**13**	**12**	**11**	**10**	**9**	**8**	**7**	**6**	**5**	**4**	**3**	**2**	**1**	**0**	
															X	Voltage Hdwr Flt
														X		Under Volt L-L
													X			Over Volt L-L
												X				Voltage Unbal
											X					Phase Rotation
										X						Under Frequency
									X							Over Frequency

V WarnHist Mask		
This parameter allows the user to configure which voltage based protection features are written to the five record Warning History as outlined in the table below: 1 = Recorded 0 = Not Recorded	Parameter Number	300
	Access Rule	Get/Set
	Data Type	UINT
	Object Mapping	0Fhex-12C-01
	Group	TripWarn History
	Units	—
	Minimum Value	0000000000000000
	Maximum Value	0000000001111111
	Default Value	0000000001111111

Bit																**Function:**
15	**14**	**13**	**12**	**11**	**10**	**9**	**8**	**7**	**6**	**5**	**4**	**3**	**2**	**1**	**0**	
															X	Voltage Hdwr Flt
														X		Under Volt L-L
													X			Over Volt L-L
												X				Voltage Unbal
											X					Phase Rotation
										X						Under Frequency
									X							Over Frequency

PW TripHist Mask		
This parameter allows the user to configure which power based protection features are written to the five record Trip History as outlined in the table below: 1 = Recorded 0 = Not Recorded	Parameter Number	301
	Access Rule	Get/Set
	Data Type	UINT
	Object Mapping	0Fhex-12D-01
	Group	TripWarn History
	Units	—
	Minimum Value	0000000000000000
	Maximum Value	0001111111111111
	Default Value	0001111111111111

Bit																Function:
15	14	13	12	11	10	9	8	7	6	5	4	3	2	1	0	
															X	Under Real Pwr
														X		Over Real Pwr
													X			Under Con kVAR
												X				Over Con kVAR
											X					Under Gen kVAR
										X						Over Gen kVAR
									X							Under Power kVA
								X								Over Power kVA
							X									Under PF Lagging
						X										Over PF Lagging
					X											Under PF Leading
				X												Over PF Leading
																Power Overflow

PW WarnHist Mask		
This parameter allows the user to configure which power based protection features are written to the five record Warn History as outlined in the table below: 1 = Recorded 0 = Not Recorded	Parameter Number	302
	Access Rule	Get/Set
	Data Type	UINT
	Object Mapping	0Fhex-12E-01
	Group	TripWarn History
	Units	—
	Minimum Value	0000000000000000
	Maximum Value	0001111111111111
	Default Value	0001111111111111

Bit																Function:
15	14	13	12	11	10	9	8	7	6	5	4	3	2	1	0	
															X	Under Real Pwr
														X		Over Real Pwr
													X			Under Con kVAR
												X				Over Con kVAR
											X					Under Gen kVAR
										X						Over Gen kVAR
									X							Under Power kVA
								X								Over Power kVA
							X									Under PF Lagging
						X										Over PF Lagging
					X											Under PF Leading
				X												Over PF Leading
			X													Power Overflow

Trip Snapshot

The E3 Overload Relay with firmware revision 5.01 and higher will record up to twelve real time data parameters in non-volatile memory in the event of an E3 Overload Relay trip. This information can be used by maintenance personnel to understand the electrical conditions of the electric motor at the time of the trip.

Trip Snapshot Group

SS L1 Current This parameter reports the value of L1 Current at the time of the last relay trip.	Parameter Number	144
	Access Rule	Get
	Data Type	INT
	Object Mapping	0Fhex-90-01
	Group	Trip Snapshot
	Units	Amps
	Minimum Value	0
	Maximum Value	32767
	Default Value	—

SS L2 Current This parameter reports the value of L2 Current at the time of the last relay trip.	Parameter Number	145
	Access Rule	Get
	Data Type	INT
	Object Mapping	0Fhex-91-01
	Group	Trip Snapshot
	Units	Amps
	Minimum Value	0
	Maximum Value	32767
	Default Value	—

SS L3 Current This parameter reports the value of L3 Current at the time of the last relay trip.	Parameter Number	146
	Access Rule	Get
	Data Type	INT
	Object Mapping	0Fhex-92-01
	Group	Trip Snapshot
	Units	Amps
	Minimum Value	0
	Maximum Value	32767
	Default Value	—

SS %TCU This parameter reports the value of percent thermal capacity utilization at the time of the last relay trip.	Parameter Number	147
	Access Rule	Get
	Data Type	UINT
	Object Mapping	0Fhex-93-01
	Group	Trip Snapshot
	Units	%
	Minimum Value	0
	Maximum Value	100
	Default Value	—

SS GF Current This parameter reports the value of ground fault current at the time of the last relay trip.	Parameter Number	148
	Access Rule	Get
	Data Type	INT
	Object Mapping	0Fhex-94-01
	Group	Trip Snapshot
	Units	Amps
	Minimum Value	0
	Maximum Value	1275
	Default Value	—

SS L1-L2 Voltage This parameter reports the value of L1-L2 voltage at the time of the last relay trip (only in the E3 Plus model EC5).	Parameter Number	149
	Access Rule	Get
	Data Type	UINT
	Object Mapping	0Fhex-95-01
	Group	Trip Snapshot
	Units	Volts
	Minimum Value	0
	Maximum Value	65535
	Default Value	—

SS L2-L3 Voltage This parameter reports the value of L2-L3 voltage at the time of the last relay trip (only in the E3 Plus model EC5).	Parameter Number	150
	Access Rule	Get
	Data Type	UINT
	Object Mapping	0Fhex-96-01
	Group	Trip Snapshot
	Units	Volts
	Minimum Value	0
	Maximum Value	65535
	Default Value	—

SS L3-L1 Voltage This parameter reports the value of L3-L1 voltage at the time of the last relay trip (only in the E3 Plus model EC5).	Parameter Number	151
	Access Rule	Get
	Data Type	UINT
	Object Mapping	0Fhex-97-01
	Group	Trip Snapshot
	Units	Volts
	Minimum Value	0
	Maximum Value	65535
	Default Value	—

SS Tot Real Pwr This parameter reports the value of total real power (kW) at the time of the last relay trip (only in the E3 Plus model EC5).	Parameter Number	152
	Access Rule	Get
	Data Type	INT
	Object Mapping	0Fhex-98-01
	Group	Trip Snapshot
	Units	kW
	Minimum Value	-32768
	Maximum Value	32767
	Default Value	—

SS Tot kVAR This parameter reports the value of total reactive power (kVAR) at the time of the last relay trip (only in the E3 Plus model EC5).	Parameter Number	153
	Access Rule	Get
	Data Type	INT
	Object Mapping	0Fhex-99-01
	Group	Trip Snapshot
	Units	kVAR
	Minimum Value	-32768
	Maximum Value	32767
	Default Value	—

SS Tot kVA This parameter reports the value of total apparent power (kVA) at the time of the last relay trip (only in the E3 Plus model EC5).	Parameter Number	154
	Access Rule	Get
	Data Type	INT
	Object Mapping	0Fhex-9A-01
	Group	Trip Snapshot
	Units	kVA
	Minimum Value	0
	Maximum Value	32767
	Default Value	—

SS Tot PF This parameter reports the value of total power factor at the time of the last relay trip (only in the E3 Plus model EC5).	Parameter Number	155
	Access Rule	Get
	Data Type	INT
	Object Mapping	0Fhex-9B-01
	Group	Trip Snapshot
	Units	%
	Minimum Value	-100
	Maximum Value	100
	Default Value	—

Logic Controller Communication Examples

Introduction

The E3 Overload Relay communicates its diagnostic information through a DeviceNet network using I/O Messaging or Explicit Messaging. The E3 Overload Relay will control its output relays via a DeviceNet network through the use of I/O Messaging. This chapter will show an example of I/O Messaging and four examples of Explicit Messaging including the Parameter Object, the Control Supervisory Object, the Overload Object, and the E3 Status Object. The examples will use a CompactLogix L32E via a 1769-SDN DeviceNet scanner module named DNET. The applications shown are example-specific. Some changes by the user may be necessary to apply the concepts of these examples to a specific application.

Figure 2: Network Example

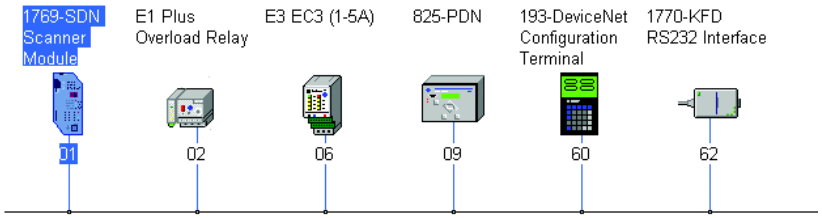

I/O Messaging

For this example, a CompactLogix L32E will energize OUT A on an E3 Plus Overload Relay using DeviceNet I/O Messaging. The E3 Plus is configured as Node 6 on the DeviceNet network. Its Output Assembly is configured to use Output Assembly 103, and its Input Assembly is configured to use Input Assembly 100 as shown:

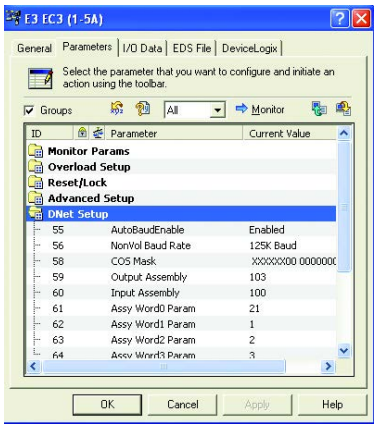

The 1769-SDN was configured to scan I/O from various devices, including the E3 Plus, and store this information to the following memory locations within the CompactLogix L32E as shown:

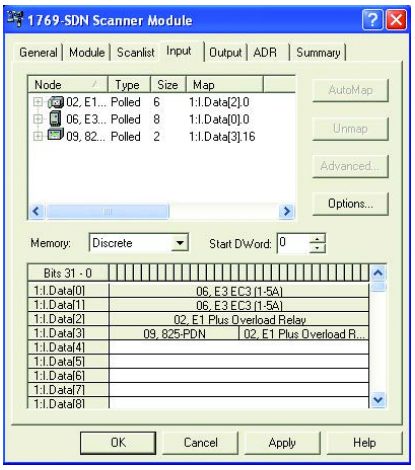

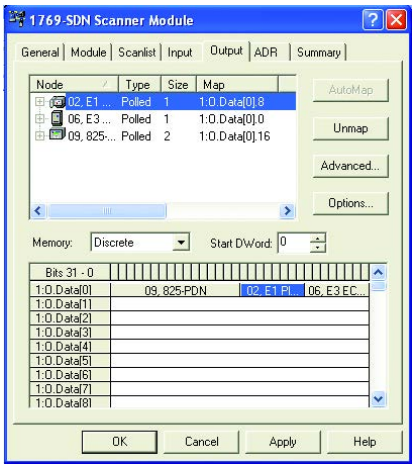

To have the CompactLogix controller energize OUT A of the E3 Plus Overload Relay using I/O Messaging, set Bit 0 in Word 1:O.Data[0] to a 1. OUT A should be energized.

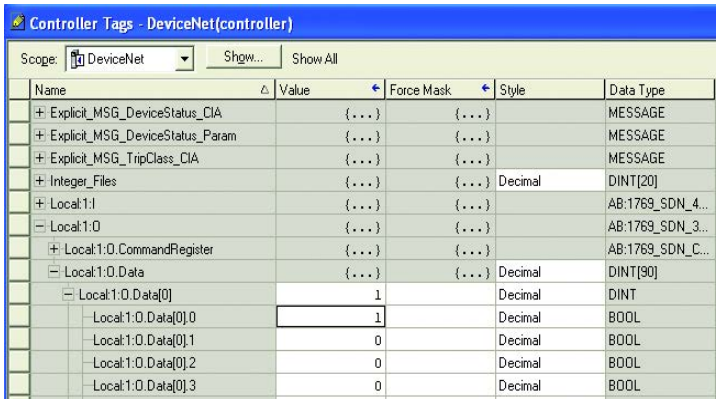

To verify that OUT A of the E3 Plus Overload Relay was energized, the CompactLogix controller will read the device status of the E3 Plus Overload Relay and place that information at Word 1:I.Data[0] with the L32E. Bit 2 identifies the state of OUT A.

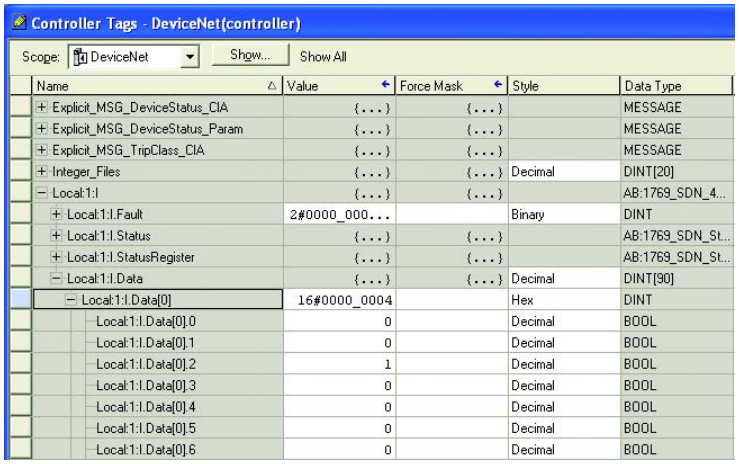

For more information on configuring the scanlist of a DeviceNet Scanner, refer to DeviceNet™ Node Commissioning on page 95.

Explicit Messaging

The E3 Overload relay supports Explicit Messaging via DeviceNet. This allows a controller to read and write various parameters from an E3 Overload Relay using the unused bandwidth of the DeviceNet network. In these examples, a CompactLogix L32E controller will read a parameter or group of parameters from the E3 Overload Relay located on Node 6 on a DeviceNet network using the following DeviceNet objects:

- Parameter Object (0x0F)
- Control Supervisor Object (0x29)
- Overload Object (0x2C)
- E3 Status Object (0x0375)

Reading Device Status using the Parameter Object Class (0x0F)

In this example a Periodic Task has been configured within the L32E to execute every 1000 ms in which a message instruction will be used to read the Device Status of the E3 Plus Overload Relay using the Parameter Object Class. The supporting ladder logic was added to execute a MSG instruction every time this Periodic Task executes.

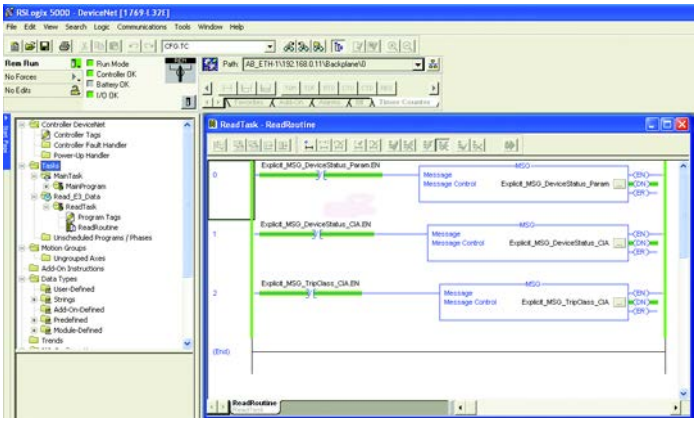

The Device Status is located in Parameter 21 within the E3 Plus Overload Relay. Setup the MSG instruction in the Configuration tab to read Parameter 21 using the Parameter Object Class by configuring the following fields:

- Message Type: CIP Generic
- Service Type: Parameter Read
- Service Code: 0x0E (hex)
- Class: 0x0F (hex)
- Instance: 21 (dec)
- Attribute: 0x01 (hex)
- Destination: Integer_Files[0]

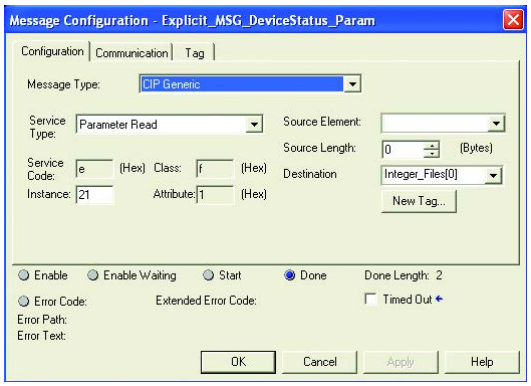

Next, set up the communications path in the Communication tab to read data from the E3 Plus Overload Relay located at Node 6 by configuring the communication Path as **"DNET, 2, 6"**

DNET - the name of the 1769-SDN DeviceNet Scanner

2 – The port number of the 1769-SDN DeviceNet Scanner

6 – The node address of the E3 Plus Overload Relay

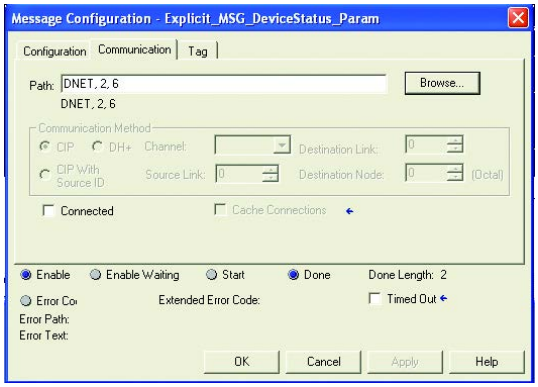

When finished, the MSG instruction will read the Device Status from the E3 Plus Overload Relay and place the results in Integer_Files[0] as shown:

Controller Tags - DeviceNet(controller)

Scope: DeviceNet Show... Show All

Name	Value	Force Mask	Style	Data Type
+ Explicit_MSG_DeviceStatus_CIA	{...}	{...}		MESSAGE
+ Explicit_MSG_DeviceStatus_Param	{...}	{...}		MESSAGE
+ Explicit_MSG_TripClass_CIA	{...}	{...}		MESSAGE
− Integer_Files	{...}	{...}	Decimal	DINT[20]
− Integer_Files[0]	4		Decimal	DINT
Integer_Files[0].0	0		Decimal	BOOL
Integer_Files[0].1	0		Decimal	BOOL
Integer_Files[0].2	1		Decimal	BOOL
Integer_Files[0].3	0		Decimal	BOOL
Integer_Files[0].4	0		Decimal	BOOL
Integer_Files[0].5	0		Decimal	BOOL
Integer_Files[0].6	0		Decimal	BOOL
Integer_Files[0].7	0		Decimal	BOOL
Integer_Files[0].8	0		Decimal	BOOL
Integer_Files[0].9	0		Decimal	BOOL

Currently OUT A of the E3 Plus Overload Relay is energized as shown in Bit 2 in Integer_Files[0].

Reading Device Status using the Control Supervisor Object Class (0x29)

In this example, a Periodic Task has been configured within the L32E to execute every 1000 ms in which a message instruction will be used to read the Device Status of the E3 Plus Overload Relay using the Control Supervisor Object Class. The supporting ladder logic was added to execute a MSG instruction every time this Periodic Task executes.

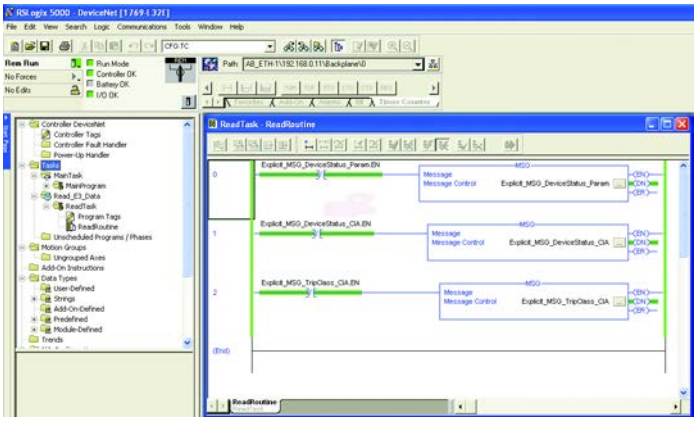

The Device Status is located in Parameter 21 within the E3 Plus Overload Relay. Set up the MSG instruction in the Configuration tab to read Parameter 21 using the Control Supervisor Object Class by configuring the following fields:

- Message Type: CIP Generic
- Service Type: Get Attribute Single
- Service Code: 0x0E (hex)
- Class: 0x29 (hex)
- Instance: 0x01 (hex)
- Attribute: 0x79 (hex)
- Destination: Integer_Files[1]

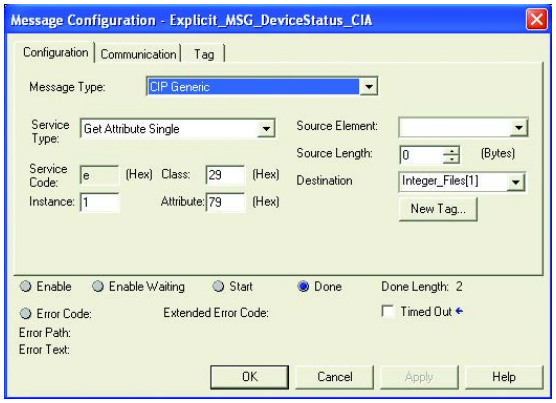

Next, set up the communications path in the Communication tab to read data from the E3 Plus Overload Relay located at Node 6 by configuring the communication Path as **"DNET, 2, 6"**

DNET - the name of the 1769-SDN DeviceNet Scanner

2 – The port number of the 1769-SDN DeviceNet Scanner

6 – The node address of the E3 Plus Overload Relay

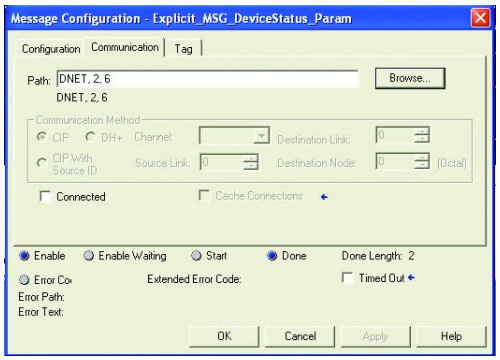

When finished, the MSG instruction will read the Device Status from the E3 Plus Overload Relay and place the results in Integer_Files[1] as shown:

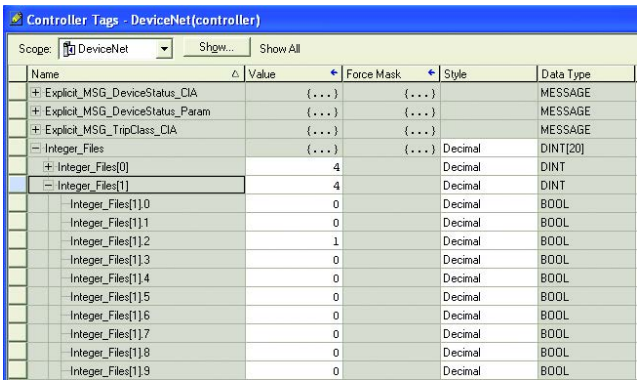

Name	Value	Force Mask	Style	Data Type
+ Explicit_MSG_DeviceStatus_CIA	{...}	{...}		MESSAGE
+ Explicit_MSG_DeviceStatus_Param	{...}	{...}		MESSAGE
+ Explicit_MSG_TripClass_CIA	{...}	{...}		MESSAGE
− Integer_Files	{...}	{...}	Decimal	DINT[20]
+ Integer_Files[0]	4		Decimal	DINT
− Integer_Files[1]	4		Decimal	DINT
Integer_Files[1].0	0		Decimal	BOOL
Integer_Files[1].1	0		Decimal	BOOL
Integer_Files[1].2	1		Decimal	BOOL
Integer_Files[1].3	0		Decimal	BOOL
Integer_Files[1].4	0		Decimal	BOOL
Integer_Files[1].5	0		Decimal	BOOL
Integer_Files[1].6	0		Decimal	BOOL
Integer_Files[1].7	0		Decimal	BOOL
Integer_Files[1].8	0		Decimal	BOOL
Integer_Files[1].9	0		Decimal	BOOL

Currently OUT A of the E3 Plus Overload Relay is energized as shown in Bit 2 in Integer_Files[1].

Reading the Trip Class using the Overload Object Class (0x2C)

In this example a Periodic Task has been configured within the L32E to execute every 1000 ms in which a message instruction will be used to read the Trip Class of the E3 Plus Overload Relay using the Overload Object Class. The supporting ladder logic was added to execute a MSG instruction every time this Periodic Task executes.

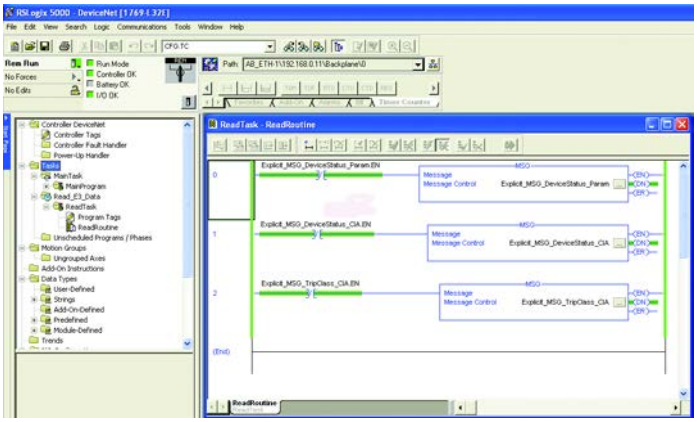

Set up the MSG instruction in the Configuration tab to read the Trip Class by using the Overload Object Class by configuring the following fields:

- Message Type: CIP Generic
- Service Type: Get Attribute Single
- Service Code: 0x0E (hex)
- Class: 0x2C (hex)
- Instance: 0x01 (hex)
- Attribute: 0x81 (hex)
- Destination: Integer_Files[2]

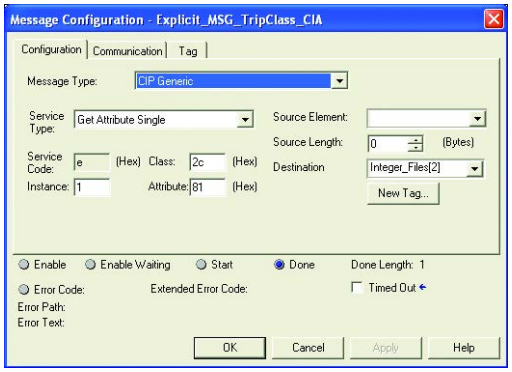

Next, set up the communications path in the Communication tab to read data from the E3 Plus Overload Relay located at Node 6 by configuring the communication Path as **"DNET, 2, 6"**

DNET - the name of the 1769-SDN DeviceNet Scanner

2 – The port number of the 1769-SDN DeviceNet Scanner

6 – The node address of the E3 Plus Overload Relay

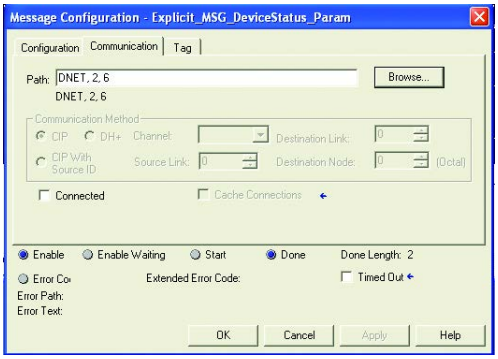

When finished, the MSG instruction will read the Trip Class from the E3 Plus Overload Relay and place the results in Integer_Files[2] as shown below:

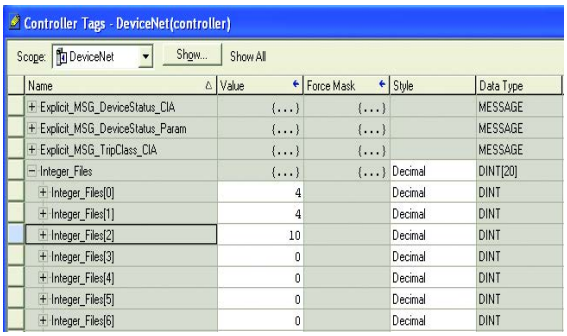

Name	Value	Force Mask	Style	Data Type
+ Explicit_MSG_DeviceStatus_CIA	{...}	{...}		MESSAGE
+ Explicit_MSG_DeviceStatus_Param	{...}	{...}		MESSAGE
+ Explicit_MSG_TripClass_CIA	{...}	{...}		MESSAGE
− Integer_Files	{...}	{...}	Decimal	DINT[20]
+ Integer_Files[0]	4		Decimal	DINT
+ Integer_Files[1]	4		Decimal	DINT
+ Integer_Files[2]	10		Decimal	DINT
+ Integer_Files[3]	0		Decimal	DINT
+ Integer_Files[4]	0		Decimal	DINT
+ Integer_Files[5]	0		Decimal	DINT
+ Integer_Files[6]	0		Decimal	DINT

Currently the Trip Class of the E3 Plus Overload Relay is configured as Class 10 as shown in Integer_Files[2].

Reading a Group of Parameters using the E3 Status Object Class (0x0375)

In this example, a Periodic Task has been configured within the L32E to execute every 1000 ms. In this task, one message instruction will be used to read 25 parameters that include data from the voltage, current, real power, reactive power, apparent power, and power factor groups using the E3 Status Object Class (included in firmware revision number 5.01 and higher). The supporting ladder logic was added to execute a MSG instruction every time this Periodic Task executes.

The E3 Status Object allows a user to define which groups of parameters to read from a single message instruction. Set up an array of integers to define the list of attributes (parameter groups) to read back from E3 Overload relay with firmware revision 5.01 and higher. The list of attributes for the E3 Status object is show in Appendix B. For this example, the message instruction will read back the following attributes (parameter groups):

- Attribute 1 – Current
- Attribute 15 – Voltage
- Attribute 17 – Real Power (kW)
- Attribute 18 – Reactive Power (kVAR)
- Attribute 19 – Apparent Power (kVA)
- Attribute 20 – Power Factor

In the integer array named *MSG_Read_Request*, define the number of attributes to read and list the specific attribute numbers:

Controller Tags - CompactLogix_L32E(controller)

Scope: CompactLogix_L Show... Show All

Name	Value	Force Mask	Style	Data Type
+ Local:1:I	{...}	{...}		AB:1769_SDN_496Bytes:I:0
+ Local:1:O	{...}	{...}		AB:1769_SDN_364Bytes:O:0
+ MSG_Read_Data	{...}	{...}		STATUS_OBJECT_READ_DATA
+ MSG_Read_Message	{...}	{...}		MESSAGE
− MSG_Read_Request	{...}	{...}	Decimal	INT[20]
+ MSG_Read_Request[0]	6		Decimal	INT
+ MSG_Read_Request[1]	15		Decimal	INT
+ MSG_Read_Request[2]	1		Decimal	INT
+ MSG_Read_Request[3]	17		Decimal	INT
+ MSG_Read_Request[4]	18		Decimal	INT
+ MSG_Read_Request[5]	19		Decimal	INT
+ MSG_Read_Request[6]	20		Decimal	INT

The data will return in an integer array with the first integer representing the following information:

- Number of Attributes
- First Attribute Number Being Returned
- First Attribute Number Data Status
- First Attribute Data

- Last Attribute Number Being Returned
- Last Attribute Number Data Status
- Last Attribute Data

Shown below is the user defined structure that list the integers being returned for this example:

Number_of_Attributes	INT	Decimal
Voltage_Attribute_Num	INT	Decimal
Voltage_Attirbute_Status	INT	Decimal
Voltage_L1	INT	Decimal
Voltage_L2	INT	Decimal
Voltage_L3	INT	Decimal
Voltage_Average	INT	Decimal
Current_Attribute_Num	INT	Decimal
Current_Attribute_Status	INT	Decimal
Current_L1	INT	Decimal
Current_L2	INT	Decimal
Current_L3	INT	Decimal
Current_Average	INT	Decimal
Current_Ground_Fault	INT	Decimal
kW_Attribute_Num	INT	Decimal
kW_Attribute_Status	INT	Decimal
kW_L1	INT	Decimal
kW_L2	INT	Decimal
kW_L3	INT	Decimal
kW_Total	INT	Decimal
kVAR_Attribute_Num	INT	Decimal
kVAR_Attribute_Status	INT	Decimal
kVAR_L1	INT	Decimal
kVAR_L2	INT	Decimal
kVAR_L3	INT	Decimal
kVAR_Total	INT	Decimal
kVA_Attribute_Num	INT	Decimal
kVA_Attribute_Status	INT	Decimal
kVA_L1	INT	Decimal
kVA_L2	INT	Decimal
kVA_L3	INT	Decimal
kVA_Total	INT	Decimal
PF_Attribute_Num	INT	Decimal
PF_Attribute_Status	INT	Decimal
PF_L1	INT	Decimal
PF_L2	INT	Decimal
PF_L3	INT	Decimal
PF_Total	INT	Decimal

Set up the MSG instruction in the Configuration tab to read the list of attributes (Parameter Groups) by configuring the following fields:

- Message Type: CIP Generic
- Service Type: Custom
- Service Code: 0x03 (hex)
- Class: 0x375 (hex)
- Instance: 1 (dec)
- Attribute: 0x00 (hex)
- Source Element: MSG_Read_Request[0]
- Source Length: 14 (Bytes)
- Destination: MSG_Read_Data

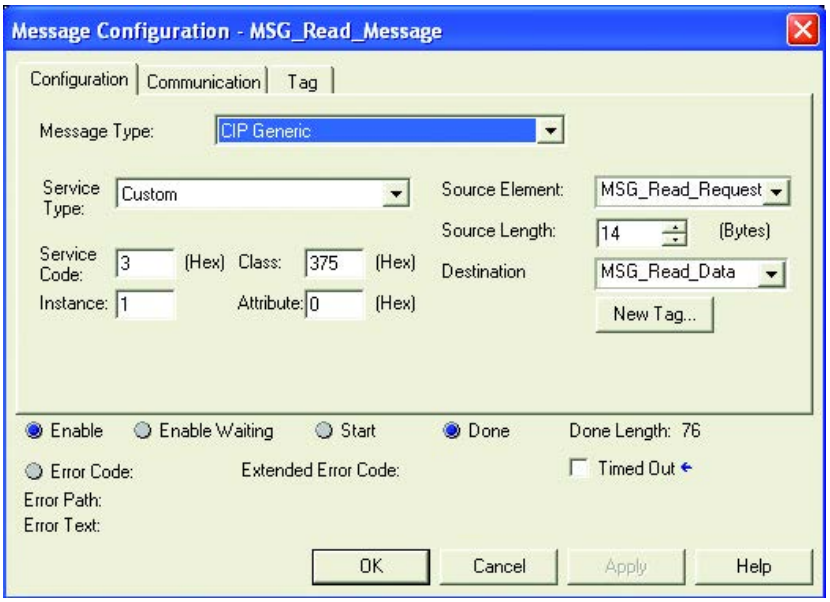

Next, set up the communications path in the Communication tab to read data from the E3 Plus Overload Relay located at Node 6 by configuring the communication Path as “DNET, 2, 6”.

DNET - the name of the 1769-SDN DeviceNet Scanner

2 – The port number of the 1769-SDN DeviceNet Scanner

6 – The node address of the E3 Plus Overload Relay

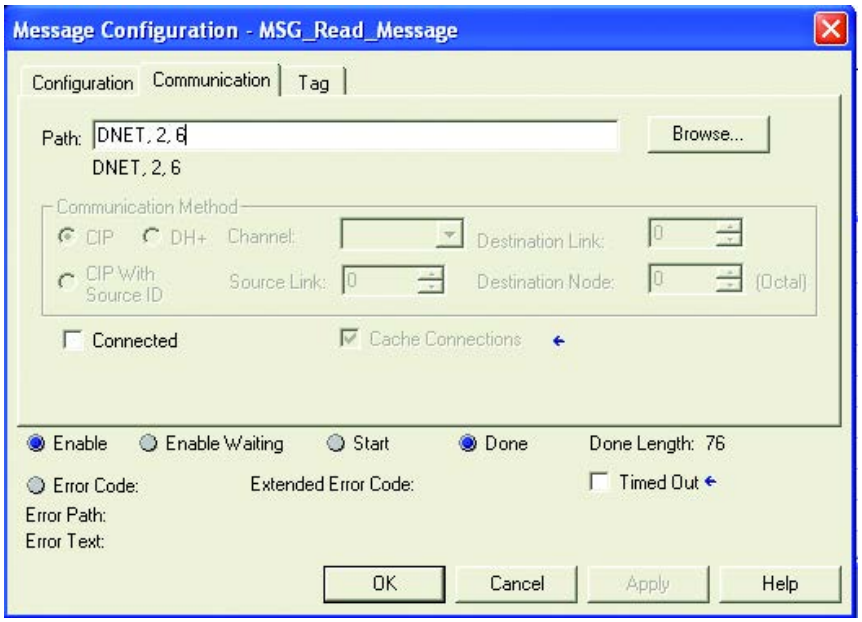

When finished, the MSG instruction will read the 25 parameters from the E3 Overload Relay and place the results into MSG_Read_Data as shown below:

Scope: CompactLogix_L Show... Show All

Name	Value	Force Mask	Style	Data Type
Local:1:I	{...}	{...}		AB:1769_SDN_496Bytes:I:0
Local:1:O	{...}	{...}		AB:1769_SDN_364Bytes:O:0
MSG_Read_Data	{...}	{...}		STATUS_OBJECT_READ_DATA
MSG_Read_Data.Number_of_Attributes	6		Decimal	INT
MSG_Read_Data.Voltage_Attribute_Num	15		Decimal	INT
MSG_Read_Data.Voltage_Attribute_Status	0		Decimal	INT
MSG_Read_Data.Voltage_L1	120		Decimal	INT
MSG_Read_Data.Voltage_L2	0		Decimal	INT
MSG_Read_Data.Voltage_L3	0		Decimal	INT
MSG_Read_Data.Voltage_Average	60		Decimal	INT
MSG_Read_Data.Current_Attribute_Num	1		Decimal	INT
MSG_Read_Data.Current_Attribute_Status	0		Decimal	INT
MSG_Read_Data.Current_L1	46		Decimal	INT
MSG_Read_Data.Current_L2	0		Decimal	INT
MSG_Read_Data.Current_L3	0		Decimal	INT
MSG_Read_Data.Current_Average	23		Decimal	INT
MSG_Read_Data.Current_Ground_Fault	0		Decimal	INT
MSG_Read_Data.kW_Attribute_Num	17		Decimal	INT
MSG_Read_Data.kW_Attribute_Status	0		Decimal	INT
MSG_Read_Data.kW_L1	51		Decimal	INT
MSG_Read_Data.kW_L2	0		Decimal	INT
MSG_Read_Data.kW_L3	0		Decimal	INT
MSG_Read_Data.kW_Total	51		Decimal	INT
MSG_Read_Data.kVAR_Attribute_Num	18		Decimal	INT
MSG_Read_Data.kVAR_Attribute_Status	0		Decimal	INT
MSG_Read_Data.kVAR_L1	-5		Decimal	INT
MSG_Read_Data.kVAR_L2	0		Decimal	INT
MSG_Read_Data.kVAR_L3	0		Decimal	INT
MSG_Read_Data.kVAR_Total	-5		Decimal	INT
MSG_Read_Data.kVA_Attribute_Num	19		Decimal	INT
MSG_Read_Data.kVA_Attribute_Status	0		Decimal	INT
MSG_Read_Data.kVA_L1	51		Decimal	INT
MSG_Read_Data.kVA_L2	0		Decimal	INT
MSG_Read_Data.kVA_L3	0		Decimal	INT
MSG_Read_Data.kVA_Total	51		Decimal	INT
MSG_Read_Data.PF_Attribute_Num	20		Decimal	INT
MSG_Read_Data.PF_Attribute_Status	0		Decimal	INT
MSG_Read_Data.PF_L1	99		Decimal	INT
MSG_Read_Data.PF_L2	100		Decimal	INT
MSG_Read_Data.PF_L3	0		Decimal	INT
MSG_Read_Data.PF_Total	100		Decimal	INT

Using DeviceLogix™

Introduction

DeviceLogix is a stand-alone Boolean program which resides within the E3 Plus Overload Relay. RS NetWorx for DeviceNet is required to program the device; however, since the program is embedded in the E3 Plus software, no additional module is required to use this technology. It is important to note that the DeviceLogix program will only run if the logic has been enabled, which can be done within the Logic Editor of RSNetWorx for DeviceNet or the DeviceNet Configuration Terminal (Cat. No. 193-DNCT).

In addition to executing specific Boolean logic, DeviceLogix can also be used to provide specific output performance under specific communication or network conditions. This can be accomplished by properly configuring *Comm Override* and *Network Override* parameters.

Comm Override. The configuration of the *Comm Override* parameter defines whether or not DeviceLogix controls the E3 Plus outputs when either a Comm Fault (lack of I/O connection) or Comm Idle (Master not in Run mode) condition exists. If DeviceLogix is enabled but *Comm Override* is disabled (default), the operation of the E3 Plus outputs will be controlled by the DeviceNet Fault State, Fault Value, Idle State, and Idle Value parameters if a Comm Fault or Comm Idle condition occurs. If DeviceLogix and *Comm Override* are both enabled, the E3 Plus outputs are controlled by the DeviceLogix program, regardless of the Comm Fault or Comm Idle state. If DeviceLogix is not enabled, the outputs will be controlled by the DeviceNet Fault/Idle State/Value parameters if a Comm Fault or Comm Idle condition occurs – regardless of the *Comm Override* configuration. If DeviceLogix is transitioned from enable to disable, the outputs will immediately go to the programmed DeviceNet Idle State/Value.

Network Override. The configuration of the *Network Override* parameter defines whether or not DeviceLogix controls the E3 Plus outputs when a network fault, such as a duplicate Mac ID or bus off condition, exists. If DeviceLogix is enabled but *Network Override* is disabled (default), the operation of the E3 Plus outputs will be controlled by the DeviceNet Fault State and Fault Value parameters if a network fault occurs. If DeviceLogix and *Network Override* are both enabled, the E3 Plus outputs are controlled by the DeviceLogix program, regardless of the network status. If DeviceLogix is not enabled, the outputs will be controlled by the DeviceNet Fault/Idle State/Value parameters if a Comm Fault condition occurs – regardless of the *Network Override* configuration. If DeviceLogix is transitioned from enable to disable, the outputs will immediately go to the programmed DeviceNet Idle State/Value.

DeviceLogix Programming

DeviceLogix has many applications and the implementation is typically only limited to the imagination of the programmer. Keep in mind that the application of DeviceLogix is only designed to handle simple logic routines.

DeviceLogix is programmed using simple Boolean math operators, such as AND, OR, NOT, timers, counters, and latches. Decision making is made by combining these Boolean operations with any of the available I/O. The inputs and outputs used to interface with the logic can come from the network or from the device hardware. Hardware I/O is the physical Inputs and Outputs located on the device such as push buttons and pilot lights that are connected to the E3 Plus Overload Relay. There are many reasons to use the DeviceLogix functionality, but some of the most common are listed below:

- Increased system reliability
- Improved diagnostics and reduced troubleshooting
- Operation independent of PLC or Network status
- Continue to run process in the event of network interruptions
- Critical operations can be safely shutdown through local logic

DeviceLogix can be programmed using function blocks or ladder logic through RS NetWorx for DeviceNet. After a successful download to the E3 Plus overload relay, DeviceLogix can be enabled using RS NetWorx for DeviceNet or the DeviceNet configuration terminal (Cat. No. 193-DNCT).

DeviceLogix Programming Example

The following example shows how to program a simple logic routine to control the E3 Plus Overload Relay's outputs based on the condition of input signals. OUT A control is defined by the states of IN1 and IN2 processed through a Boolean OR gate. OUT B control is defined by the states of IN3 and IN4 processed through a separate Boolean OR gate. This example is using RS NetWorx for DeviceNet version 8.00.01 and an E3 Plus Series C overload relay.

IMPORTANT Before programming logic it is important to decide on the conditions under which the logic run. As defined earlier, the conditions can be defined by setting parameter 79 (Comm Override) and parameter 80 (Network Override) to the value that you want.

1. While in RS NetWorx for DeviceNet, double-click on the E3 Plus and select the DeviceLogix Tab. If you are prompted with a dialog box while online with the E3 Plus, then select Upload. Next, select Start Logic Editor, select the Function Block Editor, and press OK.

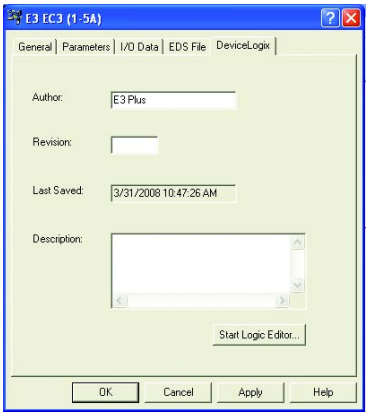

2. If programming offline, then continue to Step 3. If programming online, place the E3 Plus into Edit mode by selecting Edit from the Tools pull down menu or by selecting the button. Select **Yes** to enter Edit mode.

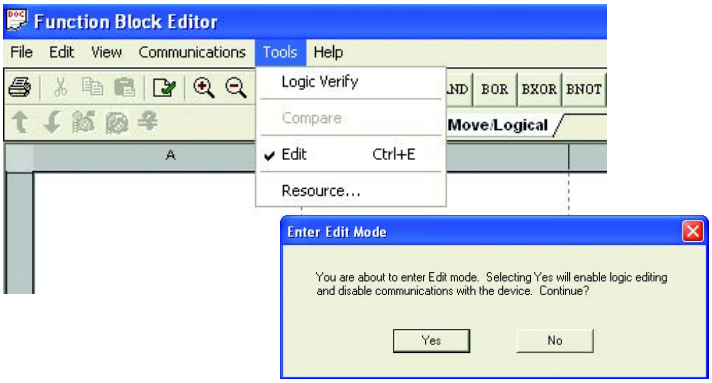

3. Using the left mouse button, select the Boolean OR (BOR) function block from the Move/Logical tab and drag it onto the display.

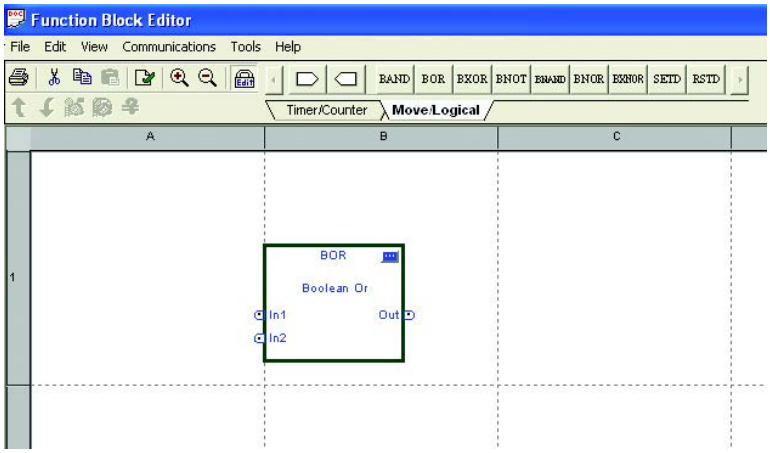

4. Using the left mouse button, select the Bit Input block and drag it to the left of the BOR function block. Double-click on the Bit Input block to select Input 1 of the E3 Plus under the Hardware Boolean Input set.

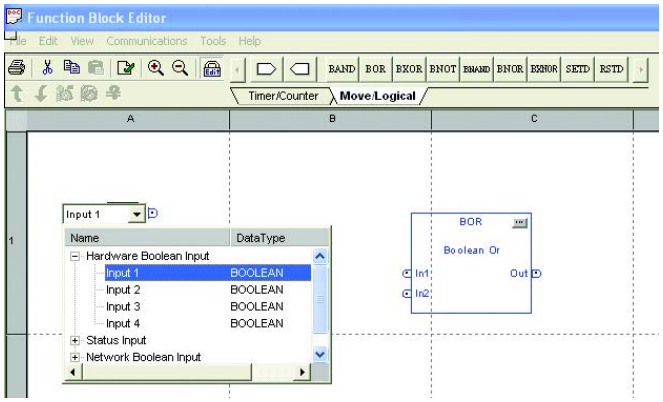

5. Place the cursor on the right of the Bit Input block and press the left mouse button. Draw a line from the Bit Input block to the In1 of the BOR function block and double-click the left mouse button to establish a connection.

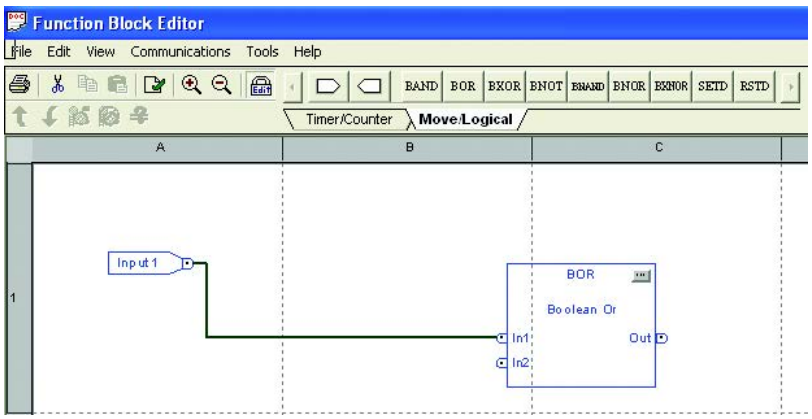

6. Repeat steps 4 and 5 to add Input 2 of the E3 Plus to In2 of the BOR function block.

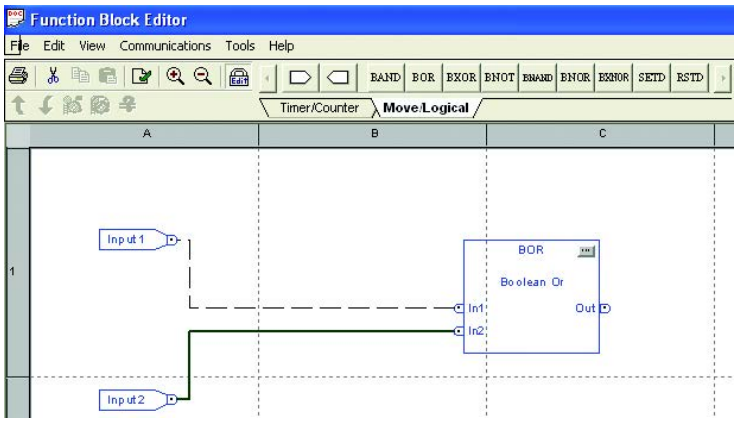

7. Using the left mouse button, select the Bit Output block and drag it to the right of the BOR function block. Double-click on the Bit Input block to select Output A of the E3 Plus under the Hardware Boolean Output set.

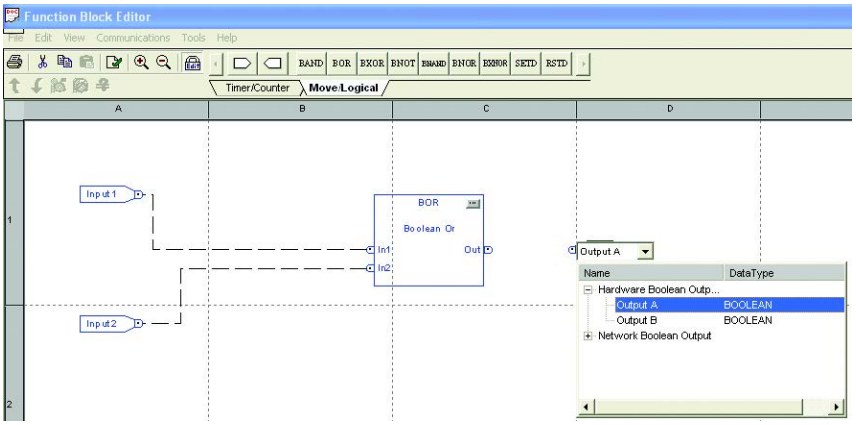

8. Place the cursor on the left of the Bit Output block and press the left mouse button. Draw a line from the Bit Output block to the Out of the BOR function block and double-click the left mouse button to establish a connection.

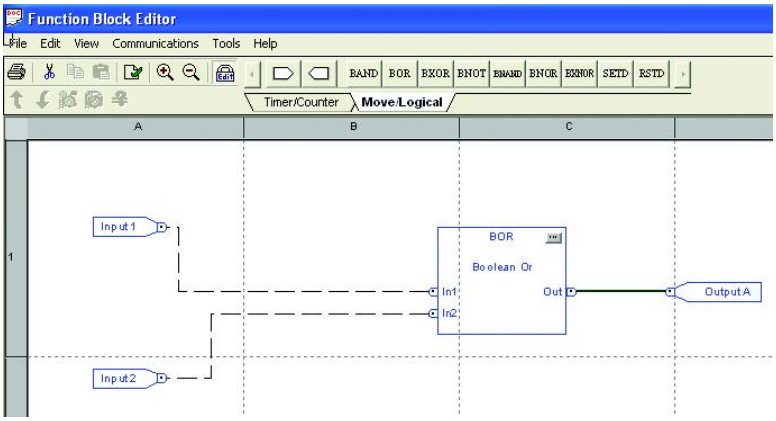

9. Repeat steps 3 through 8 to add a second BOR function block that monitors Input 3 and 4 to control Output B of the E3 Plus.

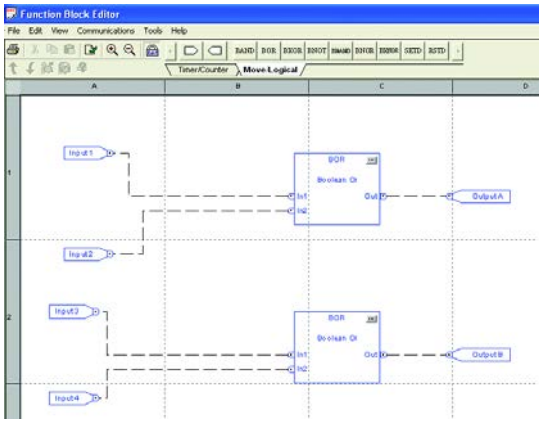

10. Disable Edit mode by de-selecting the Edit mode button or through the Tools menu.

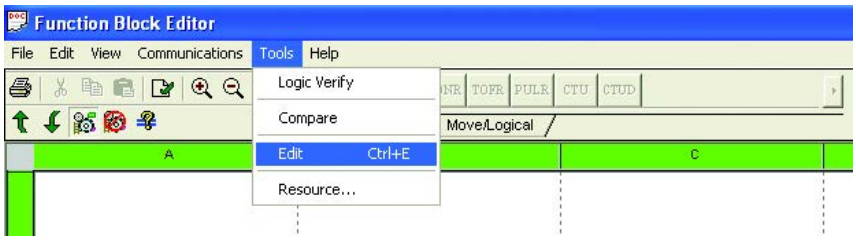

11. If programming the function block offline, exit the Function Block editor and go online with the DeviceNetwork. Download the parameters, including the DeviceLogix Function Blocks, to the E3 Plus and proceed to step 12. If programming the function block online, download the Function Blocks to the E3 Plus by selecting the Download button or through the Communications menu.

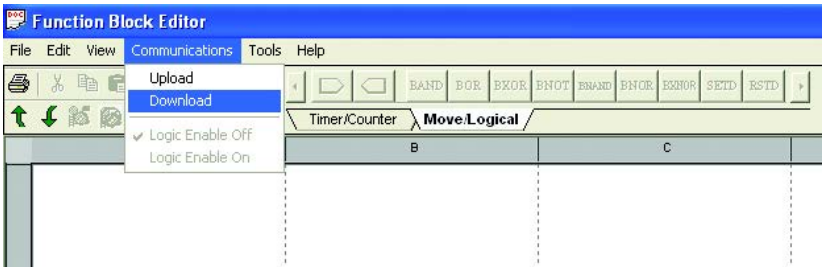

A dialog box will appear when the Function Blocks are successfully downloaded to the E3 Plus. Press OK to continue.

12. Next, the DeviceLogix Function Blocks need to be enabled. This can be done through a DeviceNet Configuration Terminal (Catalog Number 193-DNCT) or through RSNetWorx. When using RSNetWorx to enable the DeviceLogix function blocks, select the Logic Enable On button or through the Communications menu.

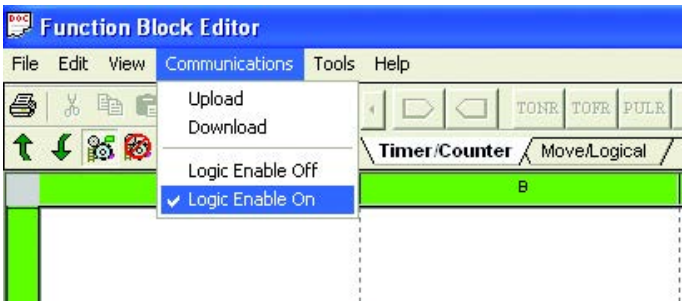

13. Verify the functionality of the DeviceLogix Function Blocks by enabling Input 1 on the E3 Plus. When Input 1 is enabled, Output A will energize.

Troubleshooting

Introduction

The purpose of this chapter is to assist in troubleshooting the E3 Overload Relay using its advisory LEDs and diagnostic parameters.

ATTENTION: Servicing energized industrial control equipment can be hazardous. Electrical shock, burns, or unintentional actuation of controlled industrial equipment may cause death or serious injury. For safety of maintenance personnel as well as others who may be exposed to electrical hazards associated with the maintenance activities, follow the local safety-related work practices (for example, the NFPA 70E, Part II, *Electrical Safety for Employee Workplaces*, in the United States) when working on or near energized equipment. Maintenance personnel must be trained in the safety practices, procedures, and requirements that pertain to their respective job assignments. Do not work alone on energized equipment.

ATTENTION: Do not attempt to defeat or override fault circuits. The cause of a fault indication must be determined and corrected before attempting operation. Failure to correct a control system or mechanical malfunction may result in personal injury and/or equipment damage due to uncontrolled machine system operation.

Advisory LEDs

The E3 Overload Relay provides the following advisory LED indicators:

NETWORK STATUS	TRIP / WARN
OUT A	OUT B
IN 1	IN 3
IN 2	IN 4

Trip/Warn LED

The Trip/Warn LED will indicate device status by flashing a red trip code or an amber warning code. The flash pattern followed by a pause identifies the specific trip or warning. Refer to the product's side label or the chart below for trip and warning codes. Refer to the *Trip/Warn LED Troubleshooting Procedures* section

of this chapter for tips associated with troubleshooting trip and warning conditions.

Table 9: Trip/Warn Codes

Trip / Warning Description	Trip Table (Long Red)	Trip Code (Short Red)	Warning Table (Long Amber)	Warning Code (Short Amber)	Protection Fault	Non-Volatile Fault
Test Trip	—	1	—	—	No	No
Overload	—	2	—	2	Yes	Yes
Phase Loss	—	3	—	—	Yes	Yes
Ground Fault	—	4	—	4	Yes	Yes
Stall	—	5	—	—	Yes	Yes
Jam	—	6	—	6	Yes	Yes
Underload	—	7	—	7	Yes	Yes
PTC	—	8	—	8	Yes	Yes
Current Imbalance	—	9	—	9	Yes	Yes
Comm Fault	—	10	—	10	Yes	No
Comm Idle	—	11	—	11	Yes	No
NonVol Memory Fault	—	12	—	—	No	No
Hardware Fault	—	13	—	—	No	No
ConfigurationFault	—	—	—	13	No	No
PM - # Starts ❶	—	—	—	14	No	No
Remote Trip	—	15	—	—	No	No
PM Oper. Hours ❶	—	—	—	15	No	No
Blocked Start/Start Inhibit ❶	—	16	—	—	No	No
Voltage Input Module Hardware Fault ❷	1	1	1	1	No	No
Under Voltage L-L ❷	1	2	1	2	Yes	Yes
Over Voltage L-L ❷	1	3	1	3	Yes	Yes
Voltage Unbalance ❷	1	4	1	4	Yes	Yes
Phase Rotation ❷	1	5	1	5	Yes	Yes
Under Frequency ❷	1	6	1	6	Yes	Yes
Over Frequency ❷	1	7	1	7	Yes	Yes
Under Real Power (kW) ❷	2	1	2	1	Yes	Yes
Over Real Power (kW) ❷	2	2	2	2	Yes	Yes
Under Reactive Power Consumed (+kVAR) ❷	2	3	2	3	Yes	Yes
Over Reactive Power Consumed (+kVAR) ❷	2	4	2	4	Yes	Yes
Under Reactive Power Generated (-kVAR) ❷	2	5	2	5	Yes	Yes
Over Reactive Power Generated (-kVAR) ❷	2	6	2	6	Yes	Yes
Under Apparent Power (kVA) ❷	2	7	2	7	Yes	Yes
Over Apparent Power (kVA) ❷	2	8	2	8	Yes	Yes
Under Power Factor Lagging (-PF) ❷	2	9	2	9	Yes	Yes
Over Power Factor Lagging (-PF) ❷	2	10	2	10	Yes	Yes
Under Power Factor Leading (+PF) ❷	2	11	2	11	Yes	Yes
Over Power Factor Leading (+PF) ❷	2	12	2	12	Yes	Yes
Power Value Overflow (kW, kVAR or KVA) ❷	2	13	2	13	Yes	Yes

❶ Series C and later

❷ E3 Plus Model EC5 Only

IMPORTANT The Trip conditions identified as “Protection Faults” are the basis for the OUTA Pr FltState, OUTA Pr FltValue, OUTB Pr FltState, and OUTB Pr FltValue parameters.

IMPORTANT Cycling power to the E3 Overload Relay will not clear a "Non-Volatile Fault". A "Non-Volatile Fault" must be manually reset. An Overload or PTC Fault can also be automatically reset.

Network Status LED

This LED provides information on the state of the E3 Overload Relay's DeviceNet network connection. Refer to the ***DeviceNet Troubleshooting Procedure*** section for descriptions of the various states this LED can take and the associated recommended corrective action.

OUT A & OUT B LEDs

The amber OUT A or OUT B LED illuminates when the output is commanded on. However, an illuminated LED does not guarantee that the output is actually on.

IN 1,2,3 & 4 LEDs

The amber IN1, IN2, IN3, or IN4 LED illuminates when a user-connected contact is closed.

Power-Up Sequence

After the E3 Overload Relay is installed according to the guidelines specified in Chapter 2, apply power to the overload relay's DeviceNet connector. After applying power, the following sequence should occur:

1. The Trip relay should close 2.35 seconds later and the TRIP/WARN LED will not flash (unless a "Non-Volatile Fault" previously existed or a fault condition is present).

2. At the same time, the NETWORK STATUS LED should flash green for approximately 2 seconds, then red for 1/4 second. If autobaud is enabled and the E3 Overload Relay is connected to an active network, the green LED will continue to flash once the baud rate has been determined. If the E3 Overload Relay is not connected to an active network, this LED will not continue to flash.

3. Once the E3 Overload Relay has been allocated by a Master, the NETWORK STATUS LED will turn solid green.

DeviceNet Modes of Operation

The E3 Overload Relay has four DeviceNet modes of operation: Power-up Reset Mode, Run Mode, Recoverable Error Mode, and Unrecoverable Error Mode.

Power-Up Reset Mode

During Power-Up Reset Mode, the following occurs:

1. The NETWORK STATUS LED should flash green for approximately 2 seconds, then red for 1/4 second. If autobaud is enabled and the E3 Overload Relay is connected to an active network, the green LED will continue to flash once the baud rate has been determined. If the E3 Overload Relay is not connected to an active network, this LED will not continue to flash.

IMPORTANT The E3 Overload Relay protection functions are still operational even without an established network connection.

2. Once the baud rate is determined, the E3 Overload Relay performs a duplicate node address check to verify another node is not assigned to the same DeviceNet node address (MAC ID). If a duplicate node is detected on the network, the *NETWORK STATUS* LED turns solid red, and the E3 Overload Relay enters the *Recoverable Error Mode*.

If the power-up or reset is successful, the overload relay will enter *Run Mode*.

Run Mode

In Run Mode, the E3 Overload Relay will operate as a slave device to a master device. The *NETWORK STATUS* LED will blink green if there are no network connections established with a network master. When one or more connections are in the "established" state, the *NETWORK STATUS* LED will turn solid green. When one or more connections are in the "timed-out" state, the *NETWORK STATUS* LED will blink red. In the Run Mode, the E3 Overload Relay will:

1. Accept messages from a master on the DeviceNet network

2. Send response messages, COS messages, or CYCLIC messages to a master.

If a communication error is detected, the E3 Overload Relay will either enter the *Recoverable Error* or *Unrecoverable Error Mode*.

Recoverable Error Mode

In Recoverable Error Mode, the E3 Overload Relay's *NETWORK STATUS* LED turns solid red. The overload relays will respond to messages that are specified in offline node recovery message protocol.

Error Type	Description	LED State
Recoverable	Duplicate node address detected	Solid Red

Unrecoverable Error Mode

In Unrecoverable Error Mode, the E3 Overload Relay's *NETWORK STATUS* LED turns solid red. The overload relay continues in this state as long as the device is powered.

Error Type	Description	LED State
Unrecoverable	Power-up initialization failure	Solid Red
	Incorrect baud rate	
	Fatal communication error (bus-off)	

Resetting a Trip

ATTENTION: Resetting a trip will not correct the cause for the trip. Corrective action should be taken before resetting the trip.

An E3 Overload Relay trip condition can be reset by taking one of the following actions:

1. Actuating the TRIP/RESET button on the E3 Overload Relay.
2. Setting the Fault Reset bit in the E3 Overload Relay's Output Assembly via the DeviceNet network.
3. Actuating a reset signal
4. Actuating a reset signal to IN1 when Parameter 77, *IN1=Trip Reset*, in enabled (Series A, FRN 2.xxx).
5. Actuating a reset signal to one of the inputs when programmed to "Trip Reset" via one of the corresponding assignment parameters (83...86) (FRN 3.xx and later)

6. Setting Parameter 30, *OL/PTC ResetMode*, to the "Automatic" selection to allow the unit to automatically reset after overload and thermistor (PTC) trips.

7. Cycling supply power to the E3 Overload Relay to clear Non-Volatile Faults.

8. Setting Parameter 26, *Trip Reset*, to a value of 1 = trip reset.

IMPORTANT An overload trip cannot be reset until the value of Parameter 9,*% Therm Utilized*, is below the value set in Parameter 31, *OL Reset Level*.

IMPORTANT A PTC trip cannot be reset until the motor has cooled sufficiently for the resistance of the PTC detector to drop below the E3 Plus Overload Relay's PTC *Reset Resistance* level.

Trip/Warn LED Troubleshooting Procedures

The following table lists the possible causes for each trip type and the recommended action to take.

Table 10: Trip/Warn LED Troubleshooting Procedures

Trip Description	Possible Cause	Corrective Action
Test Trip	1. Operation of the Test/Reset button	1. Operate the Test/Reset button to clear the trip.
Overload	1. Motor overloaded 2. Improper parameter settings	1. Check and correct source of overload (load, mechanical transmission components, motor bearings). 2. Set parameter values to match the motor and application requirements.
Phase Loss	1. Missing supply phase 2. Poor electrical connection 3. Contactor operation 4. Improper parameter setting	1. Check for open line (i.e. blown fuse). 2. Check all power terminations from the branch circuit-protecting device down to the motor for proper tightness. Ensure that the overload connection to the contactor is secure. 3. Inspect contactor for proper operation. 4. Single-phase applications require that Parameter 27, *Single/Three Ph*, is set to "single phase".
Ground Fault	1. Power conductor or motor winding is shorting to ground 2. Motor winding insulation is decayed 3. Foreign Object short 4. External ground fault sensor (core balance current transformer) has improper connection	1. Check power conductors and motor windings for low resistance to ground. 2. Check motor winding insulation for low resistance to ground. 3. Check for foreign objects. 4. Check cable connections.
Stall	1. Motor has not reached full speed by the end of the *Stall Enabld Time* (Parameter 39) 2. Improper parameter settings	1. Check for source of stall (i.e. excessive load, or mechanical transmission component failure). 2. Parameter 39, *Stall Enabld Time*, is set too low for the application. Check to ensure that Parameter 28, *FLA Setting*, is set correctly.
Jam	1. Motor current has exceeded the programmed jam level 2. Improper parameter settings	1. Check for the source of the jam (i.e., excessive load or mechanical transmission component failure). 2. Parameter 43, *Jam Trip Level*, is set too low for the application. Check to ensure that Parameter 28, *FLA Setting*, is set correctly.
PTC	1. Motor stator windings overheated 2. Thermistor leads short-circuited or broken	1. Check for source of motor overtemperature (i.e. overload, obstructed cooling, high ambient temperature, excessive starts/hour). 2. Inspect thermistor leads for short-circuit or open

Table 11: Trip/Warn LED Troubleshooting Procedures, Continued

Trip Description	Possible Cause	Corrective Action
Current Imbalance	1. Imbalance in incoming power 2. Motor winding imbalance 3. Motor idling 4. Contactor or circuit breaker operation	1. Check power system (i.e. blown fuse). 2. Repair motor, or if acceptable, raise value of Parameter 51, *CI Trip Level.* 3. Raise value of Parameter 51, *CI Trip Level*, to an acceptable level. 4. Inspect contactor and circuit breaker for proper operation.
Comm Fault	1. Communication disruption	1. Check the DeviceNet cabling for a wiring disconnection.
Comm Idle	1. Programmable controller processor set to the "program" mode.	1. Reset trip after the programmable controller process is returned to the "run" mode.
NonVol Memory Fault	1. Internal product failure	1. Consult the factory.
Hardware Fault (trip)	1. Hardware configuration failure	1. Verify that the input terminals (1,2,3,4,5 or 6) are not shorted at the PTC terminals (IT1, IT2). 2. Consult the factory.
Configuration Fault (warning)	1. Parameter 27, *Single/Three Ph*, is set to single phase and current is being sensed in phase L3 during motor operation. 2. FLA setting is outside the "legal" range, as determined by the corresponding CT Ratio setting.	1. For three-phase applications, Parameter 27, *Single/Three Ph*, should be set to "three-phase"; for single-phase applications, verify that current iflowing through L1 and L2 only. 2. See Table 41 - and program the FLA setting within the range specified.
Remote Trip	1. Contact closure of remote sensor (e.g., vibration switch).	1. Take corrective action to address the issue that caused the sensor to actuate. 2. Check sensor for proper operation. 3. Check wiring.
PM - # Starts ❶ (warning)	1. Parameter 96, Starts Counter, is equal to or greater than the value set in parameter 101, PM -# Starts.	1. Set parameter 104, Clear Queue, to reset parameter 96, Starts Counter.
PM – Oper. Hours❶ (warning)	1. Parameter 95, Elapsed Time, is equal to or greater than the value set in parameter 102, PM – Oper. Hours.	1. Set parameter 104, Clear Queue, to reset parameter 95, Elapsed Time.
Blocked Start/Start Inhibit ❶	1. The number of starts count within the past hour period equals the value set in the parameter 99, Starts/Hour. 2. The time expired since the most recent start is less than the value set in the parameter 100, Starts Interval.	1. Check parameter 98, Time to Start, and wait that amount of time, or change the configuration to allow more starts/hour. 2. Check parameter 98, Time to Start, and wait that amount of time, or change the configuration to shorten the interval between starts.
Voltage Input Module Hardware Fault ❷	1. The Voltage Input Module is not properly communicating to the E3 Plus relay	1. Check the ribbon cable that connects Voltage Input Module to the E3 Plus relay. If the cable is damaged, please order 193-NCEC5CNT for a replacement cable. 2. Check the Voltage Input Module for damage. If damaged, please order 193-NVEC5VIM for a replacement Voltage Input Module.
Under Voltage L-L ❷	1. L-L Voltage has exceeded the programmed under voltage level 2. Improper parameter settings	1. Check power system 2. Inspect contactor and circuit breaker for proper operation. 3. Verify that Parameter 217, *UV Trip Level*, is set properly for the application. 4. Check to ensure that Parameters 289 and 290, *PT Primary and PT Secondary* , are set properly if applicable.
Over Voltage L-L ❷	1. L-L Voltage has exceeded the programmed over voltage level 2. Improper parameter settings	1. Check power system 2. Inspect contactor and circuit breaker for proper operation. 3. Verify that Parameter 221, *OV Trip Level,* is set properly for the application. 4. Check to ensure that Parameters 289 and 290, *PT Primary and PT Secondary* , are set properly if applicable.
Voltage Unbalance ❷	1. Unbalance in incoming voltage 2. Contactor or circuit breaker operation	1. Check power system 2. Inspect contactor and circuit breaker for proper operation. 3. Verify that Parameter 231, *V UnbalTripLevel*, is set properly for the application.
Phase Rotation ❷	1. The 3-phase voltage rotation changed (e.g., ABC to ACB)	1. Check power system 2. Inspect contactor and circuit breaker for proper wiring. 3. Verify that Parameter 224, *Ph Rot Trip*, is set properly for the application.
Under Frequency ❷	1. Voltage frequency has exceeded the programmed under frequency level 2. Improper parameter settings 3. Relay is applied to a variable frequency drive that is running outside its measurement range	1. Check power system 2. Inspect contactor, circuit breaker, or variable frequency drive for proper operation. 3. Verify that Parameter 235, *UF Trip Level*, is set properly for the application.
Over Frequency ❷	1. Voltage frequency has exceeded the programmed over frequency level 2. Improper parameter settings 3. Relay is applied to the output of a variable frequency drive.	1. Check power system 2. Inspect contactor or circuit breaker for proper operation. 3. Verify that Parameter 239, *OF Trip Level,* is set properly for the application. 4. The E3 Plus model EC5 is not intended to be used on the output of a variable frequency drive.

❶ Series C and later
❷ E3 Plus Model EC5 Only

Table 12: Trip/Warn LED Troubleshooting Procedures, Continued

Trip Description	Possible Cause	Corrective Action
Under Real Power (kW) ❷	1. Real power has exceeded the programmed under real power level. 2. Improper parameter settings. 3. Relay is applied to the output of a variable frequency drive.	1. Check power system 2. Verify that current is flowing from the line side (L Terminals) to the load side (L Terminals or contactor mounting stabs) of the relay. 3. Inspect contactor or circuit breaker for proper operation. 4. Verify that Parameter 243, *UW Trip Level*, is set properly for the application. 5. The E3 Plus model EC5 is not intended to be used on the output of a variable frequency drive. 6. Check to ensure that Parameters 289 and 290, *PT Primary and PT Secondary* , are set properly if applicable.
Over Real Power (kW) ❷	1. Real power has exceeded the programmed over real power level. 2. Improper parameter settings. 3. Relay is applied to the output of a variable frequency drive.	1. Check power system 2. Verify that current is flowing from the line side (L Terminals or contactor mounting stabs) to the load side (T terminals) of the relay. 3. Inspect contactor or circuit breaker for proper operation. 4. Verify that Parameter 247, *OW Trip Level*, is set properly for the application. 5. The E3 Plus model EC5 is not intended to be used on the output of a variable frequency drive. 6. Check to ensure that Parameters 289 and 290, *PT Primary and PT Secondary* , are set properly if applicable.
Under Reactive Power Consumed (+kVAR) ❷	1. Reactive power has exceeded the programmed under reactive power consumed level. 2. Improper parameter settings. 3. Relay is applied to the output of a variable frequency drive.	1. Check power system 2. Verify that current is flowing from the line side (L Terminals or contactor mounting stabs) to the load side (T terminals) of the relay. 3. Inspect contactor or circuit breaker for proper operation. 4. Verify that Parameter 251, *UVARC Trip Level*, is set properly for the application. 5. The E3 Plus model EC5 is not intended to be used on the output of a variable frequency drive. 6. Check to ensure that Parameters 289 and 290, *PT Primary and PT Secondary* , are set properly if applicable.
Over Reactive Power Consumed (+kVAR) ❷	1. Reactive power has exceeded the programmed over reactive power consumed level. 2. Improper parameter settings. 3. Relay is applied to the output of a variable frequency drive.	1. Check power system 2. Verify that current is flowing from the line side (L Terminals or contactor mounting stabs) to the load side (T terminals) of the relay. 3. Inspect contactor or circuit breaker for proper operation. 4. Verify that Parameter 255, *OVARC Trip Level*, is set properly for the application. 5. The E3 Plus model EC5 is not intended to be used on the output of a variable frequency drive. 6. Check to ensure that Parameters 289 and 290, *PT Primary and PT Secondary* , are set properly if applicable.
Under Reactive Power Generated (-kVAR) ❷	1. Reactive power has exceeded the programmed under reactive power generated level. 2. Improper parameter settings. 3. Relay is applied to the output of a variable frequency drive.	1. Check power system 2. Verify that current is flowing from the line side (L Terminals or contactor mounting stabs) to the load side (T terminals) of the relay. 3. Inspect contactor or circuit breaker for proper operation. 4. Verify that Parameter 259, *UVARG Trip Level*, is set properly for the application. 5. The E3 Plus model EC5 is not intended to be used on the output of a variable frequency drive. 6. Check to ensure that Parameters 289 and 290, *PT Primary and PT Secondary* , are set properly if applicable.

❷ E3 Plus Model EC5 Only

Table 13: Trip/Warn LED Troubleshooting Procedures, Continued

Trip Description	Possible Cause	Corrective Action
Over Reactive Power Generated (-kVAR) ❷	1. Reactive power has exceeded the programmed over reactive power generated level. 2. Improper parameter settings. 3. Relay is applied to the output of a variable frequency drive.	1. Check power system 2. Verify that current is flowing from the line side (L Terminals or contactor mounting stabs) to the load side (T terminals) of the relay. 3. Inspect contactor or circuit breaker for proper operation. 4. Verify that Parameter 263, *OVARG Trip Level*, is set properly for the application. 5. The E3 Plus model EC5 is not intended to be used on the output of a variable frequency drive. 6. Check to ensure that Parameters 289 and 290, *PT Primary and PT Secondary* , are set properly if applicable.
Under Apparent Power (kVA) ❷	1. Apparent power has exceeded the programmed under apparent power level. 2. Improper parameter settings. 3. Relay is applied to the output of a variable frequency drive.	1. Check power system 2. Inspect contactor or circuit breaker for proper operation. 3. Verify that Parameter 267, *UVA Trip Level*, is set properly for the application. 4. The E3 Plus model EC5 is not intended to be used on the output of a variable frequency drive. 5. Check to ensure that Parameters 289 and 290, *PT Primary and PT Secondary* , are set properly if applicable.
Over Apparent Power (kVA) ❷	1. Apparent power has exceeded the programmed over apparent power level. 2. Improper parameter settings. 3. Relay is applied to the output of a variable frequency drive.	1. Check power system 2. Inspect contactor or circuit breaker for proper operation. 3. Verify that Parameter 271, *OVA Trip Level*, is set properly for the application. 4. The E3 Plus model EC5 is not intended to be used on the output of a variable frequency drive. 5. Check to ensure that Parameters 289 and 290, *PT Primary and PT Secondary* , are set properly if applicable.
Under Power Factor Lagging (-PF) ❷	1. Power factor has exceeded the programmed under power factor lagging level. 2. Improper parameter settings. 3. Relay is applied to the output of a variable frequency drive.	1. Check power system 2. Verify that current is flowing from the line side (L Terminals or contactor mounting stabs) to the load side (T terminals) of the relay. 3. Inspect contactor or circuit breaker for proper operation. 4. Verify that Parameter 275, *UPFLG Trip Level*, is set properly for the application. 5. The E3 Plus model EC5 is not intended to be used on the output of a variable frequency drive. 6. Check to ensure that Parameters 289 and 290, *PT Primary and PT Secondary* , are set properly if applicable.
Under Power Factor Leading (+PF) ❷	1. Power factor has exceeded the programmed under power factor leading level. 2. Improper parameter settings. 3. Relay is applied to the output of a variable frequency drive.	1. Check power system 2. Verify that current is flowing from the line side (L Terminals or contactor mounting stabs) to the load side (T terminals) of the relay. 3. Inspect contactor or circuit breaker for proper operation. 4. Verify that Parameter 283, *UPFLD Trip Level*, is set properly for the application. 5. The E3 Plus model EC5 is not intended to be used on the output of a variable frequency drive. 6. Check to ensure that Parameters 289 and 290, *PT Primary and PT Secondary* , are set properly if applicable.
Over Power Factor Leading (+PF) ❷	1. Power factor has exceeded the programmed over power factor leading level. 2. Improper parameter settings. 3. Relay is applied to the output of a variable frequency drive.	1. Check power system 2. Verify that current is flowing from the line side (L Terminals or contactor mounting stabs) to the load side (T terminals) of the relay. 3. Inspect contactor or circuit breaker for proper operation. 4. Verify that Parameter 287, *OPFLD Trip Level*, is set properly for the application. 5. The E3 Plus model EC5 is not intended to be used on the output of a variable frequency drive. 6. Check to ensure that Parameters 289 and 290, *PT Primary and PT Secondary* , are set properly if applicable.
Power Value Overflow (kW, kVAR or KVA) ❷	1. Power calculations have exceeded the limits of the E3 Plus model EC5. 2. Improper parameter settings. 3. Relay is applied on a power system that is a too large to properly calculate	1. Check power system 2. Verify FLA setting, Parameter 28, is within the range specified for the appropriate *CT Ratio*, Parameter 78. 3. Check to ensure that Parameters 289 and 290, *PT Primary and PT Secondary* , are set properly if applicable.

❷ E3 Plus Model EC5 Only

DeviceNet Troubleshooting Procedures

The following table identifies possible causes and corrective actions when troubleshooting DeviceNet related failures using the *NETWORK STATUS* LED.

Table 14: DeviceNet Troubleshooting Procedures

Color	State	Possible Cause	Corrective Action
None		1. The E3 Overload Relay is not receiving power at the DeviceNet connector.	1. Check DeviceNet power and cable connections and the power connection on the DeviceNet connector.
Green Red Off	Flashing	1. The E3 or E3 Plus Overload Relay is trying to determine the network baud rate	1. The overload relay can not determine the network baud rate if no network traffic exists. Network traffic can be induced by invoking a Network Who using DeviceNet Manager.
Green	Flashing	1. Overload Relay is on-line but not allocated to a master.	1. Check DeviceNet master and its scan list for correct scanner configuration.
Green	Solid	1. Normal operating state, and the E3 Overload Relay is allocated to a master.	1. No action required.
Red	Flashing	1. I/O connection timed-out	1. Reset DeviceNet master device.
Red	Solid	1. Diagnostics test failed on power-up/reset. Internal fault exists. 2. Duplicate DeviceNet node address exists (two DeviceNet nodes cannot have the same address). 3. Invalid baud rate (if autobaud is disabled).	1. Cycle power to the unit and network. If the fault still exists, replace unit. 2. Change the value of Parameter 57, *NonVol MAC ID*, to a valid address and reset the device. 3. This will only occur if Parameter 55, *AutoBaudEnable*, is set to "disabled". Set Parameter 55 to "enabled" and reset the E3 Overload Relay (or) set Parameter 56, *NonVol Baud Rate*, to the correct setting and reset the E3 Overload Relay.

Loss of Node Address

Refer to DeviceNet™ Node Commissioning on page 95 for further information regarding node commissioning.

Input and Output Troubleshooting Procedures

ATTENTION: If the outputs are to be commanded via an explicit message, ensure that there can never be an established I/O connection that can actively control them, and that the explicit message connection has a non-zero expected packet rate (EPR) setting.

Table 15: Input and Output Troubleshooting Procedures

Failure Type	Failure Description	Corrective Action
Input 1...4	Input 1,2,3 or 4 does not appear to recognize a contact closure	1. Check the supply voltage on the DeviceNet connector. 2. If the applicable contact closes but the E3 Overload Relay Input does not recognize the closure, check the continuity and wiring to the connected contact. 3. Check the IN 1,2,3 and 4 status LEDs. If the appropriate LED does not illuminate, measure the voltage across and current through the applicable input. Verify they are within the ratings of the E3 Overload Relay (See Appendix A). 4. If the appropriate Input LED does illuminate, but the input status is not reported properly over the DeviceNet network, check the programmable controller ladder logic and I/O mapping.
Input 1	Trip reset operation	1. Check the programming of Parameter 77, IN1=Trip Reset ❶
Input 5…6 ❷	Input 5 or 6 does not appear to recognize a contact closure	1. Check the supply voltage on the DeviceNet connector. 2. If the applicable contact closes but the E3 Overload Relay Input does not recognize the closure, check the continuity and wiring to the connected contact. 3. Check the state of the inputs by monitoring bits 10 and 11 of Parameter 21, *Device Status*, using RSNetWorx for DeviceNet or a 193-DNCT (DeviceNet Configuration Terminal). If the appropriate bit is not set, measure the voltage across and current through the applicable input. Verify that they are within the ratings of the E3 Overload Relay (See Appendix A). 4. If the appropriate input status is not reported properly over the DeviceNet network, check the programmable controller ladder logic and I/O mapping.
Trip Relay❸	The trip relay does not appear to be functioning properly	1. Check the TRIP/WARN and NETWORK STATUS LEDs, or the DEVICE STATUS and TRIP STATUS parameters. If a Protection Fault exists, refer to the Trip and Warning troubleshooting procedure. If a DeviceNet-related fault exists, refer to the DeviceNet troubleshooting procedure. 2. Press the Test/Reset button on the E3 Overload Relay. The trip relay should open and the TRIP/WARN LED should exhibit a single red flash code. Remove the control circuit power and measure the impedance across terminals 95 and 96 to verify the trip relay contacts are open. Press the Test/ Reset button again. The unit should reset and the trip relay contacts should close. Measure across terminals 95 and 96 to ensure the trip relay contacts closed. 3. Remove control circuit supply power and check the control wiring to the E3 Overload Relay Trip Relay (95/96).
OUT A or OUT B	Output A or Output B does not appear to turn on (close) when commanded to do so	1. Check the supply voltage on the DeviceNet connector. 2. Check the OUTA and OUTB status LEDs. If the appropriate LED does not illuminate, check the programmable controller ladder logic and I/O mapping. 3. If the appropriate Output LED is illuminated, remove the control circuit power and check for continuity across the appropriate output terminals (13/14 for OUTA, 23/24 for OUTB). If the continuity test indicates the output is open, replace the E3 Overload Relay. Check the supply voltage against the ratings of the contactor and the relay output before installing a new unit. 4. Remove control circuit power and check the control circuit fuse and the control wiring to the E3 Overload Relay output terminals. 5. Check the control circuit power supply. Verify the voltage is within the contactor and overload relay ratings. 6. Check the *TRIP/WARN* and *NETWORK STATUS* LEDs, or the *DEVICE STATUS* and *TRIP STATUS* parameters. If a Protection Fault exists, refer to the *Trip and Warning* troubleshooting procedure. If a DeviceNet-related fault exists, refer to the *DeviceNet* troubleshooting procedure. 7. Check the OUTA and OUTB Pr FltState, Pr FltValue, Dn FltState, Dn FltValue, Dn IdlState, and Dn IdlValue programmable parameters. The Pr FltState and Pr Flt Value parameters supersede the Dn Flt or Dn Idle parameters.
OUT A or OUT B	Output A or Output B does not appear to turn off (open) when commanded to do so.	1. Check the OUTA and OUTB status LED's. If the appropriate LED remains illuminated, check the programmable controller ladder logic and I/O mapping. 2. If the appropriate Output LED is not illuminated, remove the control circuit power and check for continuity across the appropriate output terminals (13/14 for OUTA, 23/24 for OUTB). If the continuity test indicates the output is closed, replace the E3 Overload Relay. Check the supply voltage against the ratings of the contactor and the relay output before installing a new unit. 3. Remove control circuit power and check the control circuit fuse and the control wiring to the E3 Overload Relay output terminals. 4. Check the OUTA and OUTB Pr FltState, Pr FltValue, Dn FltState, Dn FltValue, Dn IdlState, and Dn IdlValue programmable parameters. Then check the *TRIP/WARN* and *NETWORK STATUS* LEDs, or the *DEVICE STATUS* and *TRIP STATUS* parameters. If a Protection Fault exists, refer to the *Trip and Warning* troubleshooting procedure. If a DeviceNet-related fault exists, refer to the *DeviceNet* troubleshooting procedure.
OUT A or OUT B	The contactor connected to Output A or Output B appears to "chatter"	1. Verify the OUT A or OUT B LED remains in the appropriate On or Off state. If the LED is flickering, check the programmable controller's ladder logic program. 2. Check the control circuit supply voltage. Verify it is within the ratings of the contactor coil and the overload relay's outputs. 3. Remove the control circuit power. Verify all control wiring is properly secured.

❶ FRN 2.000 and later.
❷ E3 Plus Model EC5 Only
❸The E3 Trip Relay contacts will not close until 2.35 seconds after power is applied to the E3 Overload Relay DeviceNet connector. If a "Non-Volatile Fault" previously existed or a fault condition is present during power-up, the trip relay contacts will not close until the fault condition is removed and the trip is reset.

Specifications

Electrical Specifications

Figure 3: Motor/Load Ratings

Terminals	1/L1, 3/L2, 5/L3, 2/T1, 4/T2, 6/T3
Rated Insulation Voltage (U_i)	690V AC
Rated Operating Voltage (U_e) IEC: UL:	 690V AC 600V AC
Rated Impulse Voltage (U_{imp})	6 kV
Rated Operating Current (I_e)	See Catalog Number Explanation
Rated Frequency	20...250 Hz ❶
Short Circuit Ratings	See Chapter 2
Number of Poles	3
Application	Single-phase or Three-phase

❶ Exception: Any E3 Overload Relay that uses an external ground fault sensor is limited to 50/60 Hz detection.

Table 16: Power Supply Ratings

Terminals	DeviceNet Connector: V+ (Red), V- (Black)
Rated Supply Voltage (U_s)	24V DC
Operating Range	11...25V DC
Rated Supply Current	See Chart Below
Maximum Surge Current at Power-Up	3 A
Maximum Power Consumption E3: E3 Plus:	 3.2 W 4.2 W
Maximum Power Interruption Time @ 11V DC: @ 25V DC:	 1 ms 10 ms

Figure 13: E3 & E3 Plus Power Supply Current

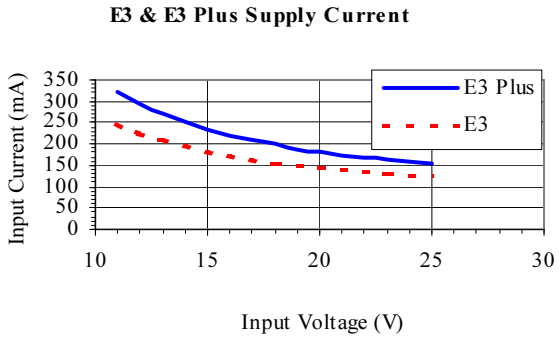

Table 17: Output and Trip Relay Ratings

Terminals OUT A: OUT B (E3 Plus): Trip Relay:		 13/14 23/24 95/96
Type of Contacts		Form A SPST - NO
Rated Thermal Current (I_{the})		5 A
Rated Insulation Voltage (U_i)		300V AC
Rated Operating Voltage (U_e)		240V AC
Rated Operating Current (I_e)		3 A (@120V AC), 1.5 A (@240V AC)
		0.25 A (@110V DC), 0.1 A (@220V DC)
Minimum Operating Current		10 mA @ 5V DC
Rating Designation		B300
Utilization Category		AC-15
Resistive Load Rating	(p.f. = 1.0)	5 A, 250V AC 5 A, 30V DC
Inductive Load Rating (L/R = 7 ms)	(p.f. = 0.4)	2 A, 250V AC 2 A, 30V DC
Short Circuit Current Rating		1,000 A
Recommended Control Circuit Fuse		KTK-R-6 (6 A, 600 V)
Rated Number of Operations Trip Relay: OUT A and B: W/100-C09…100-C43 W/100-C60…100-C85 W/NEMA Size 0…2 W/NEMA Size 3		 100,000 5,000,000 2,500,000 1,000,000 300,000

Table 18: Input Ratings

Terminals IN 1: IN 2: IN 3 (E3 Plus): IN 4 (E3 Plus): Supply Voltage (24V DC): IN 5 (E3 Plus model EC5): IN 6 (E3 Plus model EC5):	 1 2 3 4 5,6 7 8
Supply Voltage (provided by E3)	24V DC ± 10%
Type of Inputs	Current Sinking
On-State Voltage	15V DC
On-State Current (turn-on)	2 mA
Steady State Current	8 mA
Off-State Voltage	5V DC
Off-State Current	0.5 mA
Transition Voltage	5...15V DC
Transition Current	0.5...2.0 mA

Table 19: Thermistor/PTC Input Ratings (E3 Plus models EC2 and EC3)

Terminals	1T1, 1T2
Type of Control Unit	Mark A
Maximum Number of Sensors	6
Maximum Cold Resistance of PTC Sensor Chain	1500 Ω
Trip Resistance	3400 Ω ± 150 Ω
Reset Resistance	1600 Ω ± 100 Ω
Short-circuit Trip Resistance	25 Ω ± 10 Ω
Maximum Voltage @ PTC Terminals (R_{PTC} = 4 kΩ)	7.5V DC
Maximum Voltage @ PTC Terminals (R_{PTC} =open)	30V DC
Response Time	800 ms

Environmental Specifications

Table 20: Environmental Specifications

Ambient Temperature Storage Operating (Open) (Enclosed)	 –40°…+85°C (–40…+185°F) –20°…+55°C (–4°…+131°F) –20°…+40°C (–4°…+104°F)
Humidity Operating Damp Heat – Steady State (per IEC 68-2-3) Damp Heat – Cyclic (per IEC 68-2-30)	 5…95% Non-condensing 92% r.h., 40°C (104°F), 56 days 93% r.h., 25°C/40°C (77°F/104°F), 21 Cycles
Cooling Method	Natural Convection
Vibration (per IEC 68-2-6)	3 G
Shock (per IEC 68-2-27)	30 G
Maximum Altitude	2000 m ❶
Pollution Environment	Pollution Degree 3
Terminal Marking	EN 50012
Degree of Protection 193-ECxxx 592-ECxxx	 IP20

❶ Current ratings must be derated at altitudes greater than 2000 m

Electromagnetic Compatibility Specifications

Table A.1 Electromagnetic Compatibility Specifications

Electrostatic Discharge Immunity Test Level: Performance Criteria:	 8kV Air Discharge 6kV Contact Discharge 1 ❶❷
RF Immunity Test Level: Performance Criteria:	 10V/m 1 ❶❷
Electrical Fast Transient/Burst Immunity Test Level: Performance Criteria:	 4kV (Power) 2kV (Control & Comm) 1 ❶❷

Table A.1 Electromagnetic Compatibility Specifications

Surge Immunity Test Level: Performance Criteria:	 2kV (L-E) 1kV (L-L) 1 ❶❷
Radiated Emissions	Class A
Conducted Emissions	Class A

❶Performance Criteria 1 requires the DUT to experience no degradation or loss of performance.
❷Environment 2.

Functionality Specifications

Table 21: DeviceNet Communications

Baud Rate	125 k, 250 k, 500 k
Auto-Baud Rate Identification	Yes
"Group 2 – Slave Only" device type	Yes
Polled I/O Messaging	Yes
Change of State Messaging	Yes
Cyclic Messaging	Yes
Explicit Messaging	Yes
Full Parameter Object Support	Yes
Group 4 – Off-Line Node Recovery Messaging	Yes
Configuring Consistency Value	Yes
Unconnected Messaging Manager (UCMM)	Yes

Protection

Table 22: Protection

	Trip	Warning
Overload	Yes	Yes
Phase Loss	Yes	No
Ground Fault ❶	Yes	Yes
Stall	Yes	No
Jam	Yes	Yes
Underload	Yes	Yes
Thermistor (PTC) ❶	Yes	Yes
Current Imbalance	Yes	Yes
Communication Fault	Yes	Yes
Communication Idle	Yes	Yes
Remote Trip	Yes	No
Blocked Start/Start Inhibit ❷	Yes	No
Under Voltage L-L ❶	Yes	Yes
Over Voltage L-L ❶	Yes	Yes
Voltage Unbalance ❶	Yes	Yes
Phase Rotation ❸	Yes	Yes
Under Frequency ❸	Yes	Yes
Over Frequency ❸	Yes	Yes
Under Real Power (kW) ❸	Yes	Yes
Over Real Power (kW) ❸	Yes	Yes
Under Reactive Power Consumed (+kVAR) ❸	Yes	Yes
Over Reactive Power Consumed (+kVAR) ❸	Yes	Yes
Under Reactive Power Generated (-kVAR) ❸	Yes	Yes
Over Reactive Power Generated (-kVAR) ❸	Yes	Yes
Under Apparent Power (kVA) ❸	Yes	Yes
Over Apparent Power (kVA) ❸	Yes	Yes
Under Power Factor Lagging (-PF) ❸	Yes	Yes
Over Power Factor Lagging (-PF) ❸	Yes	Yes
Under Power Factor Leading (+PF) ❸	Yes	Yes
Over Power Factor Leading (+PF) ❸	Yes	Yes
Power Value Overflow (kW, kVAR or KVA) ❸	Yes	Yes

❶ E3 Plus Models EC2, EC3, and EC5
❷ Series C or Later
❸ E3 Plus Model EC5 Only

Table 23: Overload Protection

Type of Relay	Ambient Compensated Time-Delay Phase Loss Sensitive
Nature of Relay	Solid-State
FLA Setting	See Chapter 5
Trip Rating	120% FLA
Trip Class	5…30
Reset Mode	Automatic or Manual
Overload Reset Level	1…100% TCU

Table 24: Ground Fault Protection

Type	Core Balanced
Intended Use	Equipment Protection
Classification (Per UL 1053)	Class I
Protection Range	20…100 mA
	100…500 mA
	200 mA…1.0 A
	1.0…5.0 A
Trip & Warning Time Delay	0.1…25.0 s
Protection Inhibit Time	0…250 s

DeviceNet™ Information

Electronic Data Sheets (EDS)

EDS files are specially formatted ASCII files that provide all of the information necessary for a configuration tool (e.g., RSNetWorx™ for DeviceNet) to access and alter the parameters of a device. The EDS file contains all the parameter information of a device to include:

- number of parameters
- groupings
- parameter name
- minimum, maximum, and default values,
- minimum, maximum, and default units,
- data format, and
- scaling.

EDS files for all E3 Overload Relay units are available at www.rockwellautomation.com/resources/eds. The EDS files may also be built automatically by some configuration tools since all of the information necessary for an EDS file may be extracted from the E3 Overload Relay.

IMPORTANT DeviceLogix capability is not available when uploading the EDS from an E3 Plus Overload Relay. The EDS file **must** be obtained from the internet.

Product Codes

Since the E3 Overload Relay is available in a variety of current ranges, each model supports a parameter set that is slightly different in terms of min, max, and default values for parameters that are related to motor current. Therefore, each model uses an EDS file specific to that model. Configuration tools use “product codes” to identify which EDS file to use for a given device. The following table summarizes the various product codes.

Table 72 - EDS File Product Codes

Product Code	Name String	Ground Fault	Current Monitoring	Voltage & Power	# of Inputs/ Outputs	DeviceLogix
3	E3 (1…5 A)	None	No	No	2/1	No
4	E3 Plus (1…5 A)	Internal			4/2	Yes
5	E3 (3…15 A)	None			2/1	No
6	E3 Plus (3…15 A)	Internal			4/2	Yes
7	E3 (5…25 A)	None			2/1	No
8	E3 Plus (5…25 A)	Internal			4/2	Yes
9	E3 (9…45 A)	None			2/1	No
10	E3 Plus (9…45 A)	Internal			4/2	Yes
11	E3 (18…90 A)	None			2/1	No
12	E3 Plus (18…90 A)	Internal			4/2	Yes
29	E3 (0.4…2 A)	None			2/1	No
30	E3 Plus (0.4…2 A)	External			4/2	Yes
31	E3 (9…5000 A)				2/1	
36	E3 EC3 (1…5 A)				4/2	
38	E3 EC3 (3…15 A)					
40	E3 EC3 (5…25 A)					
42	E3 EC3 (9…45 A)					
44	E3 EC3 (18…90 A)					
46	E3 EC3 (0.4…2 A)					
48	E3 EC3 (9…5000 A)					
50	E3 EC4 (1…5 A)		Yes			
52	E3 EC4 (3…15 A)					
54	E3 EC4 (5…25 A)					
56	E3 EC4 (9…45 A)					
58	E3 EC4 (18…90 A)					
60	E3 EC4 (0.4…2 A)					
62	E3 EC4 (9…5000 A)					
64	E3 EC5 (1…5 A)		No	Yes	6/2	
66	E3 EC5 (3…15 A)					
68	E3 EC5 (5…25 A)					
70	E3 EC5 (9…45 A)					
72	E3 EC5 (18…90 A)					
74	E3 EC5 (0.4…2 A)					
76	E3 EC5 (9…5000 A)					

DeviceNet Objects

The E3 Overload Relay supports the following DeviceNet object classes.

Table 73 - DeviceNet Object Classes

Class	Object
0x0001	Identity
0x0002	Message Router
0x0003	DeviceNet
0x0004	Assembly
0x0005	Connection
0x0008	Discrete Input Point
0x0009	Discrete Output Point
0x000F	Parameter Object
0x0010	Parameter Group Object
0x001E	Discrete Output Group
0x0029	Control Supervisor
0x002B	Acknowledge Handler
0x002C	Overload Object
0x0097	DPI Fault Object
0x0098	DPI Warning Object
0x00B4	DN Interface Object
0x00C2	MCC Object
0x030E	Logic Supervisor
0x0375	E3 Status Object

Identity Object – Class Code 0x01

The following class attributes are supported for the Identity Object.

Table 74 - Identity Object Class Attributes

Attribute ID	Access Rule	Name	Data Type	Value
1	Get	Revision	UINT	1

Two instances of the Identity Object will be supported. The following table shows what each instance will represent and what the revision attribute will report.

Table 75 - Revision Attribute Display

Instance	Description	Revision Attribute
1	Operating System Flash	The firmware revision of the OS stored in flash memory
2	Boot Code Flash	The firmware revision of the boot code stored in flash memory

Instance 1 of the Identity Object will contain the following attributes.

Table 76 - Identity Attribute Instance Attributes

Attribute ID	Access Rule	Name	Data Type	Value	
1	Get	Vendor ID	UINT	Programmable via test object	
2	Get	Device Type	UINT	3	
3	Get	Product Code	UINT	See Product Code table	
4	Get	Revision: Major Minor	Structure of: USINT USINT	4 1	
5	Get	Status	WORD	Bit 0	0 = Not owned, 1 = Owned by master
				Bit 2	0 = Factory Defaulted, 1 = Configured
				Bit 8	Minor recoverable fault
				Bit 9	Minor unrecoverable fault
				Bit 10	Major recoverable fault
				Bit 11	Major unrecoverable fault
6	Get	Serial Number	UDINT	Unique number for each device	
7	Get	Product Name: String Length ASCII String	Structure of: USINT STRING	Product code-specific	
8	Get	State	USINT	Returns the value "3 = Operational"	
9	Get	Configuration Consistency Value	UINT	Unique value depending upon output of the parameter checksum algorithm	
10	Get/Set	Heartbeat Interval	USINT	In seconds. Default = 0	

The following common services are implemented for the Identity Object.

Table 77 - Identity Object Common Services

	Implemented for:		
Service Code	**Class**	**Instance**	**Service Name**
0x0E	Yes	Yes	Get_Attribute_Single
0x05	No	Yes	Reset (DeviceNet only)

Message Router – Class Code 0x02

No class or instance attributes are supported. The message router object exists only to route explicit messages to other objects.

DeviceNet Object – Class Code 0x03

The following class attributes are supported for the DeviceNet Object:

Table 78 - DeviceNet Object Class Attributes

Attribute ID	Access Rule	Name	Data Type	Value
1	Get	Revision	UINT	2

A single instance (instance 1) of the DeviceNet Object is supported. The following instance attributes are supported.

Table 79 - DeviceNet Object Instance Attributes

Attribute ID	Access Rule	Name	Data Type	Value
1	Get/Set	MAC ID	USINT	0...63
2	Get/Set	Baud Rate	USINT	0 = 125 kbaud 1 = 250 kbaud 2 = 500 kbaud
5	Get	Allocation Information: Allocation's Choice Byte Master's MAC ID	Structure of: BYTE USINT	Allocation byte ❶ 0...63 = address 255 = unallocated
❶ Allocation byte:		Bit 0 — Explicit Messaging Bit 1 — Polled I/O Bit 4 — Change of State I/O Bit 5 — Cyclic I/O Bit 6 — Acknowledge Suppress I/O		

The following services are implemented for the DeviceNet Object.

Table 80 - DeviceNet Object Common Services

Service Code	Implemented for: Class	Implemented for: Instance	Service Name
0x0E	Yes	Yes	Get_Attribute_Single
0x10	No	Yes	Set_Attribute_Single
0x4B	No	Yes	Allocate_Master/Slave_Connection_Set
0x4C	No	Yes	Release_Master/Slave_Connection_Set

Assembly Object – Class Code 0x04

The following class attributes will be supported for the Assembly Object.

Table 81 - Assembly Object Class Attributes

Attribute ID	Access Rule	Name	Data Type	Value
2	Get	Max Instance	UINT	

The following static assembly instance attributes will be supported for each assembly instance.

Table 82 - Static Assembly Instance Attributes

Attribute ID	Access Rule	Name	Data Type	Value
1	Get	Number of Members in Member List	UINT	
2	Get	Member List	Array of STRUCT	Array of CIP paths
		Member Data Description	UINT	Size of Member Data in bits
		Member Path Size	UINT	Size of Member Path in bytes
		Member Path	Packed EPATH	See Appendix A for Member EPATHs for each assembly instance
3	Conditional	Data	Array of BYTE	
4	Get	Size	UINT	Number of bytes in attribute 3
100	Get	Name String	STRING	

The following services will be implemented for the Assembly Object.

Table 83 - Assembly Object Services

Service Code	Implemented for:		Service Name
	Class	Instance	
0x0E	Yes	Yes	Get_Attribute_Single
0x10	No	Yes	Set_Attribute_Single

Output Assemblies

The following assembly object instances are implemented. Note that most of these assembly object instances are part of the "motor control hierarchy" of the DeviceNet specification. Other vendor specific assembly object instances have been added to allow the monitoring of the auxiliary inputs, etc.

Table 84 - Assembly Object Instance 2 Data Format TRIP RESET COMMAND

Byte	Bit 7	Bit 6	Bit 5	Bit 4	Bit 3	Bit 2	Bit 1	Bit 0
0						Fault Reset		

The following assemblies are similar to those found in the Motor Starter Profile. The only difference is that OutA and OutB map to Discrete Output Points instead of the Control Supervisor. The instance numbers are 100 plus the number assigned in corresponding assemblies in the Motor Starter Profile.

Table 85 - Assembly Object Instance 101 Data Format OUT A CMD

Byte	Bit 7	Bit 6	Bit 5	Bit 4	Bit 3	Bit 2	Bit 1	Bit 0
0								OutA

Table 86 - Assembly Object Instance 103 Data Format BASIC CMD

Byte	Bit 7	Bit 6	Bit 5	Bit 4	Bit 3	Bit 2	Bit 1	Bit 0
0			Remote Trip			Fault Reset		OutA

Table 87 - Assembly Object Instance 104 Data Format OUTPUT COMMAND

Byte	Bit 7	Bit 6	Bit 5	Bit 4	Bit 3	Bit 2	Bit 1	Bit 0
0						Fault Reset	OutB	OutA

Table 88 - Assembly Object Instance 105 Data Format COMMAND

Byte	Bit 7	Bit 6	Bit 5	Bit 4	Bit 3	Bit 2	Bit 1	Bit 0
0			Remote Trip			Fault Reset	OutB	OutA

Table 89 - Instance 110 Status Parameter Data Link Output Assembly

Byte	Bit 7	Bit 6	Bit 5	Bit 4	Bit 3	Bit 2	Bit 1	Bit 0
0			Remote Trip			Fault Reset	Output B	Output A
1	Reserved							
2	Network Input 7	Network Input 6	Network Input 5	Network Input 4	Network Input 3	Network Input 2	Network Input 1	Network Input 0
3	Network Input 15	Network Input 14	Network Input 13	Networl nput 12	Network Input 11	Network Input 10	Network Input 9	Network Input 8
4	Status Parameter A (low)							
5	Status Parameter A (high)							
6	Status Parameter B (low)							
7	Status Parameter B (high)							

Table 90 - Assembly Object Instance 140 Data Format DEVICELOGIX CMD

Byte	Bit 7	Bit 6	Bit 5	Bit 4	Bit 3	Bit 2	Bit 1	Bit 0
0			Remote Trip			Fault Reset	Output B	Output A
1	Network Input 7	Network Input 6	Network Input 5	Network Input 4	Network Input 3	Network Input 2	Network Input 1	Network Input 0
2	Network Input 15	Network Input 14	Network Input 13	Network Input 12	Network Input 11	Network Input 10	Network Input 9	Network Input 8

Input Assemblies

Table 91 - Assembly Object Instance 50 Data Format TRIP STATUS

Byte	Bit 7	Bit 6	Bit 5	Bit 4	Bit 3	Bit 2	Bit 1	Bit 0
0								Faulted

Table 92 - Assembly Object Instance 51 Data Format TRIP WARN STATUS

Byte	Bit 7	Bit 6	Bit 5	Bit 4	Bit 3	Bit 2	Bit 1	Bit 0
0							Warning	Faulted

Table 93 - Assembly Object Instance 106 Data Format BASIC STATUS

Byte	Bit 7	Bit 6	Bit 5	Bit 4	Bit 3	Bit 2	Bit 1	Bit 0
0			Input2	Input1		OutA_Stat	Warning	Faulted

Table 94 - Assembly Object Instance 107 Data Format STATUS

Byte	Bit 7	Bit 6	Bit 5	Bit 4	Bit 3	Bit 2	Bit 1	Bit 0
0	Input4	Input3	Input2	Input1	OutB_Stat	OutA_Stat	Warning	Faulted

Table 95 - Assembly Object Instance 108 EC5 Motor Starter Input Assembly

Byte	Bit 7	Bit 6	Bit 5	Bit 4	Bit 3	Bit 2	Bit 1	Bit 0
0	Input4	Input3	Input2	Input1	OutB_Stat	OutA_Stat	Warning	Tripped
1							Input 6	Input 5

Table 96 - Assembly Object Instance 100 Attributes PARAMETER BASED

Byte	Word	Value
0	0	Value of parameter pointed to by param #61 (Low Byte)
1		Value of parameter pointed to by param #61 (High Byte)
2	1	Value of parameter pointed to by param #62 (Low Byte)
3		Value of parameter pointed to by param #62 (High Byte)
4	2	Value of parameter pointed to by param #63 (Low Byte)
5		Value of parameter pointed to by param #63 (High Byte)
6	3	Value of parameter pointed to by param #64 (Low Byte)
7		Value of parameter pointed to by param #64 (High Byte)

Table 97 - Assembly Object Instance 111 Status Parameter Data Link Input Assy

Byte	Bit 7	Bit 6	Bit 5	Bit 4	Bit 3	Bit 2	Bit 1	Bit 0
0	Param A Number (low)							
1	Param A Number(high)							
2	Param A Data (low)							
3	Param A Data (high)							
4	Param B Number (low)							
5	Param B Number(high)							
6	Param B Data (low)							
7	Param B Data (high)							

Table 98 - Assembly Object Instance 141 Data Format DEVICELOGIX STAT

Byte	Bit 7	Bit 6	Bit 5	Bit 4	Bit 3	Bit 2	Bit 1	Bit 0
0	Input4	Input3	Input2	Input1	OutB_Stat	OutA_Stat	Warning	Faulted
1	Network Output 7	Network Output 6	Network Output 5	Network Output 4	Network Output 3	Network Output 2	Network Output 1	Network Output 0
2	DLogix Enabled	Network Output 14	Network Output 13	Network Output 12	Network Output 11	Network Output 10	Network Output 9	Network Output 8

Table 99 - Assembly Object Instance 142 EC5 DeviceLogix Input Assembly

Byte	Bit 7	Bit 6	Bit 5	Bit 4	Bit 3	Bit 2	Bit 1	Bit 0
0	Input 4	Input 3	Input 2	Input 1	Out B Stat	Out A Stat	Warning	Tripped
0							Input 6	Input 5
1	Network Output 7	Network Output 6	Network Output 5	Network Output 4	Network Output 3	Network Output 2	Network Output 1	Network Output 0
2	DLogix Enabled	Network Output 14	Network Output 13	Network Output 12	Network Output 11	Network Output 10	Network Output 9	Network Output 8

Table 100 - Assembly Object Instance 184 Data Format PNB STATUS

Byte	Bit 7	Bit 6	Bit 5	Bit 4	Bit 3	Bit 2	Bit 1	Bit 0
0	Network Output 7	Network Output 6	Network Output 5	Network Output 4	Network Output 3	Network Output 2	Network Output 1	Network Output 0
1	DLogix Enabled	Network Output 14	Network Output 13	Network Output 12	Network Output 11	Network Output 10	Network Output 9	Network Output 8

Connection Object – Class Code 0x05

Multiple instances of the Connection Object are supported. Instance 1 is the explicit message connection, instance 2 is the polled I/O connection, instance 4 is the Change of State/Cyclic I/O connection, and instances 5-7 are available for explicit UCMM connections.

The following Instance 1 (explicit message connection) attributes are supported.

Table 101 - Connection Object Instance 1 Attributes

Attribute ID	Access Rule	Name	Data Type	Value
1	Get	State	USINT	0 = Nonexistent 1 = Configuring 3 = Established 4 = Timed out
2	Get	Instance Type	USINT	0 = Explicit message
3	Get	Transport Class Trigger	BYTE	0x83 (Class 3 Server)
4	Get	Produced Connection ID	UINT	10xxxxxx011 xxxxxx = Node address
5	Get	Consumed Connection ID	UINT	10xxxxxx100 xxxxxx = Node address
6	Get	Initial Comm Characteristics	BYTE	0x22
7	Get	Produced Connection Size	UINT	0x61
8	Get	Consumed Connection Size	UINT	0x61
9	Get/Set	Expected Packet Rate	UINT	in ms
12	Get/Set	Watchdog Action	USINT	1 = Auto delete 3 = Deferred delete
13	Get	Produced Connection Path Length	UINT	0
14	Get	Produced Connection Path		Null (no data)
15	Get	Consumed Connection Path Length	UINT	0
16	Get	Consumed Connection Path		Null (no data)

The following Instance 2 (polled I/O connection) attributes are supported.

Table 102 - Connection Object Instance 2 Attributes

Attribute ID	Access Rule	Name	Data Type	Value
1	Get	State	USINT	0 = Nonexistent 1 = Configuring 3 = Established 4 = Timed out
2	Get	Instance Type	USINT	1 = I/O Message
3	Get	Transport Class Trigger	BYTE	If alloc choice = polled OR If alloc choice = !polled && !ack suppressed: 0x82 (Server Class 2) If alloc choice = !polled && ack suppressed: 0x80 (Server Class 0)
4	Get	Produced Connection ID	UINT	01111xxxxxx xxxxxx = Node address
5	Get	Consumed Connection ID	UINT	10xxxxxx101 xxxxxx = Node address

Attribute ID	Access Rule	Name	Data Type	Value
6	Get	Initial Comm Characteristics	BYTE	0x21
7	Get	Produced Connection Size	UINT	0…8
8	Get	Consumed Connection Size	UINT	0…8
9	Get/Set	Expected Packet Rate	UINT	in ms
12	Get/Set	Watchdog Action	USINT	0 = Transition to timed out 1 = Auto delete 2 = Auto reset
13	Get	Produced Connection Path Length	UINT	8
14	Get/Set	Produced Connection Path	EPATH	21 04 00 25 (assy. inst.) 00 30 03
15	Get	Consumed Connection Path Length	UINT	8
16	Get/Set	Consumed Connection Path	EPATH	21 04 00 25 (assy. inst.) 00 30 03

The following Instance 4 (Change of State/Cyclic I/O connection) attributes are supported.

Table 103 - Connection Object Instance 4 Attributes

Attribute ID	Access Rule	Name	Data Type	Value
1	Get	State	USINT	0 = Nonexistent 1 = Configuring 3 = Established 4 = Timed out
2	Get	Instance Type	USINT	1 = I/O Message
3	Get	Transport Class Trigger	BYTE	Cyclic: 0x03 Cyclic Ack Suppressed: 0x00 COS: 0x13 COS Ack Suppressed: 0x10
4	Get	Produced Connection ID	UINT	01101xxxxxx xxxxxx = Node address
5	Get	Consumed Connection ID	UINT	10xxxxxx010 xxxxxx = Node address
6	Get	Initial Comm Characteristics	BYTE	0x02 (acknowledged) 0x0F (unacknowledged)
7	Get	Produced Connection Size	UINT	0…8
8	Get	Consumed Connection Size	UINT	0…8
9	Get/Set	Expected Packet Rate	UINT	in ms

Attribute ID	Access Rule	Name	Data Type	Value
12	Get/Set	Watchdog Action	USINT	0 = Transition to timed out 1 = Auto delete 2 = Auto reset
13	Get	Produced Connection Path Length	UINT	8
14	Get/Set	Produced Connection Path	EPATH	21 04 00 25 (assy. inst.) 00 30 03
15	Get	Consumed Connection Path Length	UINT	8
16	Get/Set	Consumed Connection Path	EPATH	21 04 00 25 (assy. inst.) 00 30 03

The following Instances 5...7 (Group 3 Explicit Message Connections Allocated through UCMM) are supported.

Table 104 - Connection Object Instances 5…7 Attributes

Attribute ID	Access Rule	Name	Data Type	Value
1	Get	State	USINT	0 = Nonexistent 1 = Configuring 3 = Established 4 = Timed out
2	Get	Instance Type	USINT	0 = Explicit Message
3	Get	Transport Class Trigger	BYTE	0x83 — Server, Transport Class 3
4	Get	Produced Connection ID	UINT	Depends on message group and message ID
5	Get	Consumed Connection ID	UINT	Depends on message group and message ID
6	Get	Initial Comm Characteristics	BYTE	0x33 (Group 3)
7	Get	Produced Connection Size	UINT	0
8	Get	Consumed Connection Size	UINT	
9	Get/Set	Expected Packet Rate	UINT	in ms
12	Get	Watchdog Action	USINT	01 = Auto delete 03 = Deferred delete
13	Get	Produced Connection Path Length	UINT	0
14	Get	Produced Connection Path		Empty
15	Get	Consumed Connection Path Length	UINT	0
16	Get	Consumed Connection Path		Empty

Discrete Input Point Object – Class Code 0x08

The following class attributes are supported for the Discrete Input Object:

Table 105 - Discrete Input Point Object Class Attributes

Attribute ID	Access Rule	Name	Data Type	Value
1	Get	Revision	UINT	2
2	Get	Max Instances	UINT	2 or 4

Multiple instances of the Discrete Input Object are supported, one instance for each general purpose discrete input on the E3 Overload Relay. All instances will contain the following attributes:

Table 106 - Discrete Input Point Object Instance Attributes

Attribute ID	Access Rule	Name	Data Type	Value
3	Get	Value	BOOL	0=OFF, 1=ON
115	Get/Set	Force Enable	BOOL	0=Disable, 1=Enable
116	Get/Set	Force Value	BOOL	0=OFF, 1=ON

The following common services will be implemented for the Discrete Input Point Object:

Table 107 - Discrete Input Point Object Common Services

Service Code	Implemented for:		Service Name
	Class	Instance	
0x0E	Yes	Yes	Get_Attribute_Single
0x10	No	Yes	Set_Attribute_Single

Discrete Output Point Object – Class Code 0x09

The following class attributes are supported for the Discrete Output Point Object:

Table 108 - Discrete Output Point Object Class Attributes

Attribute ID	Access Rule	Name	Data Type	Value
1	Get	Revision	UINT	1
2	Get	Max Instances	UINT	1 or 2

Multiple instances of the Discrete Output Point Object are supported, one instance for each general purpose discrete output on the E3 Overload Relay. All instances will contain the following attributes:

Table 109 - Discrete Output Point Object Instance Attributes

Attribute ID	Access Rule	Name	Data Type	Value
3	Get/Set	Value	BOOL	0=OFF, 1=ON
5	Get/Set	Fault Action	BOOL	0=Fault Value attribute, 1=Hold Last State
6	Get/Set	Fault Value	BOOL	0=OFF, 1=ON

Table 109 - Discrete Output Point Object Instance Attributes

Attribute ID	Access Rule	Name	Data Type	Value
7	Get/Set	Idle Action	BOOL	0=Fault Value attribute, 1=Hold Last State
8	Get/Set	Idle Value	BOOL	0=OFF, 1=ON
113	Get/Set	Pr Fault Action	BOOL	0=Pr Fault Value attribute, 1=Ignore
114	Get/Set	Pr Fault Value	BOOL	0=OFF, 1=ON
115	Get/Set	Force Enable	BOOL	0=Disable, 1=Enable
116	Get/Set	Force Value	BOOL	0=OFF, 1=ON
117	Get/Set	Input Binding	STRUCT: USINT Array of USINT	Size of appendix I encoded path Appendix I encoded path NULL path means attribute 3 drives the output. Otherwise, this is a path to a bit in the Bit Table.

The following common services are implemented for the Discrete Output Point Object:

Table 110 - Discrete Output Point Object Common Services

Service Code	Implemented for:		Service Name
	Class	Instance	
0x0E	Yes	Yes	Get_Attribute_Single
0x10	No	Yes	Set_Attribute_Single

Parameter Object – Class Code 0x0F

The following class attributes are supported for the Parameter Object:

Table 111 - Parameter Object Class Attributes

Attribute ID	Access Rule	Name	Data Type	Value
1	Get	Revision	UINT	1
2	Get	Max Instances	UINT	Product Code Dependent
8	Get	Parameter Class Descriptor	WORD	0x03
10	Get	Native Language	USINT	1 = English

Multiple instances of the Parameter Object are supported. All instances will contain the following attributes:

Table 112 - Parameter Object Instance Attributes

Attribute ID	Access Rule	Name	Data Type	Value
1	Get/Set (Only Get is supported for monitoring parameters)	Parameter Value	See Data Type & Data Size Attributes	
2	Get	Link Path Size	USINT	08
3	Get	Link Path Segment Type/ Port Segment Address	BYTE Path Data Dependent	Path to specific device object attribute if applicable
4	Get	Descriptor	WORD	Parameter Dependent: 0000000000ab0cd0 a - Monitoring Parameter b - Read Only Parameter c - Scaled Parameter d - Enumerated String
5	Get	Data Type	USINT	Parameter Dependent
6	Get	Data Size	USINT	Parameter Dependent
7	Get	Parameter Name	SHORT_STRING	Parameter Dependent
8	Get	Units String	SHORT_STRING	Parameter Dependent
10	Get	Minimum Value	Data Type	Parameter Dependent
11	Get	Maximum Value	Data Type	Parameter Dependent
12	Get	Default Value	Data Type	Parameter Dependent
13	Get	Scaling Multiplier	UINT	01
14	Get	Scaling Divisor	UINT	01
15	Get	Scaling Base	UINT	01
16	Get	Scaling Offset	INT	00
17	Get	Multiplier Link	UINT	0
18	Get	Divisor Link	UINT	0
19	Get	Base Link	UINT	0
20	Get	Offset Link	UINT	0
21	Get	Decimal Precision	USINT	Parameter Dependent

The following common services will be implemented for the Parameter Object:

Table 113 - Parameter Object Common Services

Service Code	Implemented for:		Service Name
	Class	Instance	
0x0E	Yes	Yes	Get_Attribute_Single
0x10	No	Yes	Set_Attribute_Single

Parameter Group Object – Class Code 0x10

The following class attributes are supported for the Parameter Group Object:

Table 114 - Parameter Group Object Class Attributes

Attribute ID	Access Rule	Name	Data Type	Value
1	Get	Revision	UINT	1
2	Get	Max Instances	UINT	7
8	Get	Native Language	USINT	1 = English

Parameter Group Instance names and member parameter instances for each group are product specific. The following instance attributes will be supported for all parameter group instances:

Attribute ID	Access Rule	Name	Data Type	Value
1	Get	Group Name String	SHORT_STRING	
2	Get	Number of Members	UINT	
3	Get	1st Parameter	UINT	
4	Get	2nd Parameter	UINT	
n	Get	Nth Parameter	UINT	

The following common services will be implemented for the Parameter Group Object.

Service Code	Implemented for:		Service Name
	Class	Instance	
0x0E	Yes	Yes	Get_Attribute_Single

Discrete Output Group Object - CLASS CODE 0x001E

A single instance of the Discrete Output Group Object will be supported. All instances will contain the following attributes.

Attribute ID	Access Rule	Name	Data Type	Value
1	Get	Group Name String	SHORT_STRING	
3	Get	Number of Instances	USINT	1 for E3, 2 for E3 Plus
4	Get	Binding	Array of UINT	List of DOP instances
6	Get/Set	Command	BOOL	0=idle; 1=run
104	Get/Set	Network Status Override	BOOL	0=No Override (go to safe state) 1=Override (run local logic)
105	Get/Set	Comm Status Override	BOOL	0=No override (go to safe state) 1=Override (run local logic)

The following common services will be implemented for the Discrete Input Group Object.

Service Code	Implemented for:		Service Name
	Class	Instance	
0x0E	No	Yes	Get_Attribute_Single
0x10	No	Yes	Set_Attribute_Single

Control Supervisor Object – Class Code 0x29

The following instance attributes are supported for the Control Supervisor Object.

Table 115 - Control Supervisor Object Instance Attributes

Attribute ID	Access Rule	Name	Data Type	Value
10	Get	Tripped	BOOL	0 = No Fault present 1 = Fault Latched
11	Get	Warning	BOOL	0 = No Warning present 1 = Warning present (not latched)
12	Get/Set	Fault Reset	BOOL	0->1 = Trip Reset otherwise no action
13	Get	Trip Code	UINT	ODVA Trip Code – In trip state indicates cause of trip; If not tripped, indicates cause of last trip.
14	Get	Warning Code	UINT	ODVA Warning Code - In warning state indicates cause of warning; If no warning, indicates cause of last warning.
17	Get/Set	Force Trip	BOOL	0->1 = Trip. Test trip generated. This attribute returns object state conflict when "Test Enable" bitr is set in Trip Enable.
100	Get	Elapsed Time	UINT	Logs motor-on (Current Present) hours.
101	Get	Starts Counter	UINT	Logs the number of motor starts.
102	Get	Starts Available	USINT	Starts left for the programmed start interval
103	Get	Time To Start	UINT	Time before the next start can be preformed (in seconds)
104	Get/Set	Starts per Hour	USINT	Number of starts allowed per hour.
105	Get/Set	Starts Interval	UINT	Minimum time between starts,
106	Get/Set	PM – Start Count	UINT	The Preventative Maintenance Start Count flag is set after this number of starts
107	Get/Set	PM – Oper Hours	UINT	The Preventative Maintenance Operating Hours flag is set after this number of hours
108	Get/Set	Test Enable	BOOL	Enables/Disables the Test Button.
109	Get	Warning Log 0	WORD	Enumerated same as attribute 115
110	Get	Warning Log 1	WORD	Enumerated same as attribute 115
111	Get	Warning Log 2	WORD	Enumerated same as attribute 115
112	Get	Warning Log 3	WORD	Enumerated same as attribute 115
113	Get	Warning Log 4	WORD	Enumerated same as attribute 115

Table 115 - Control Supervisor Object Instance Attributes

Attribute ID	Access Rule	Name	Data Type	Value
114	Get	Trip Status	WORD	Bit 0 = Test Trip Bit 1 = Overload Bit 2 = Phase Loss Bit 3 = Ground Fault ❶❷ Bit 4 = Stall Bit 5 = Jam Bit 6 = Underload Bit 7 = PTC ❶ Bit 8 = Current Imbal Bit 9 = Comm Fault Bit 10 = Comm Idle Bit 11 = NonVol Mem Bit 12 = Hardware Fault Bit 13 = Reserved Bit 14 = Remote Trip Bit 15 = Blocked Start
115	Get	Warning Status	WORD	Bit 0 = Reserved Bit 1 = Overload Bit 2 = Phase Loss Bit 3 = Ground Fault ❶❷ Bit 4 = Reserved Bit 5 = Jam Bit 6 = Underload Bit 7 = PTC ** Bit 8 = Current Imbal Bit 9 = Comm Fault Bit 10 = Comm Idle Bit 11 = Reserved Bit 12 = Config Fault Bit 13 = PM Starts Bit 14 = PM Oper Hours
116	Get	Trip Log 0	WORD	Last trip condition. Bit definitions of the value are the same as attribute 114
117	Get	Trip Log 1	WORD	Last trip condition. Bit definitions of the value are the same as attribute 114
118	Get	Trip Log 2	WORD	Last trip condition. Bit definitions of the value are the same as attribute 114
119	Get	Trip Log 3	WORD	Last trip condition. Bit definitions of the value are the same as attribute 114
120	Get	Trip Log 4	WORD	Last trip condition. Bit definitions of the value are the same as attribute 114
121	Get	Device Status	WORD	Bit 0 = Trip Bit 1 = Warning Bit 2 = OutputA Bit 3 = OutputB ❶❷ Bit 4 = Input 1 Bit 5 = Input 2 Bit 6 = Input 3 ❶❷ Bit 7 = Input 4 ❶❷ Bit 8 = Motor Current Bit 9 = GF Current ❶ Bit 10 = Input 5 ❷ Bit 11 = Input 6 ❷ Bit 12 = Motor Voltage ❷

Table 115 - Control Supervisor Object Instance Attributes

Attribute ID	Access Rule	Name	Data Type	Value
124	Get/Set	Trip Enable	WORD	Bit 0 = Reserved Bit 1 = Overload Bit 2 = Phase Loss Bit 3 = Ground Fault ❶❷ Bit 4 = Stall Bit 5 = Jam Bit 6 = Underload Bit 7 = PTC ❶ Bit 8 = Current Imbal Bit 9 = Comm Fault Bit 10 = Comm Idle Bit 11 = Reserved Bit 12 = Reserved Bit 13 = Reserved Bit 14 = Remote Trip Bit 15 = Start Inhibit
125	Get/Set	Warning Enable	WORD	Bit 0 = Reserved Bit 1 = Overload Bit 2 = Phase Loss Bit 3 = Ground Fault ❶ Bit 4 = Stall Bit 5 = Jam Bit 6 = Underload Bit 7 = PTC ❶ Bit 8 = Current Imbal Bit 9 = Comm Fault Bit 10 = Comm Idle Bit 11 = Reserved Bit 12 = Device Config Bit 13 = PM Starts Bit 14 = PM Oper Hours
126	Get/Set	Trip Reset	BOOL	0->1 = Trip Reset otherwise no action
130	Get/Set	Reset Mode	BOOL	0 = Manual 1 = Automatic
131	Get/Set	OL Reset Level	USINT	%FLA
132	Get/Set	Clear Queues	BOOL	0->1 = Clear fault and warning queues, start counters and operating hour accumulators otherwise no action
177	Get/Set	IN1 Assignment	USINT	0 = Normal 1 = Trip Reset 2 = Remote Trip 3 = 2 Speed
178	Get/Set	IN2 Assignment	USINT	0 = Normal 1 = Trip Reset 2 = Remote Trip 3 = 2 Speed
179	Get/Set	IN3 Assignment	USINT	0 = Normal 1 = Trip Reset 2 = Remote Trip 3 = 2 Speed
180	Get/Set	IN4 Assignment	USINT	0 = Normal 1 = Trip Reset 2 = Remote Trip 3 = 2 Speed

❶ E3 Plus Models EC2 and EC3
❷ E3 Plus Model EC5

The following common services are implemented for the Control Supervisor Object:

Table 116 - Control Supervisor Object Common Services

Service Code	Implemented for:		Service Name
	Class	Instance	
0x0E	Yes	Yes	Get_Attribute_Single
0x10	No	Yes	Set_Attribute_Single

Control Supervisor ODVA Fault and Warning Codes

Table 117 - Control Supervisor ODVA Fault and Warning Codes

Warning/Trip Name	Code	EC1, EC2, EC3	EC5
Test Trip	10	x	x
Remote Trip	11	x	x
Thermal Overload	21	x	x
Phase Loss	22	x	x
L1 Loss	23		
L2 Loss	24		
L3 Loss	25		
Phase Imbalance	26	x	x
Ground Fault	27	x	x
Jam	28	x	x
Underload	29	x	x
Under Voltage L-L	51		x
Over Voltage L-L	52		x
Voltage Unbalance	53		x
Phase Rotation	54		x
Hardware / Config Flt	60	x	x
Non-Volatile Memory	62	x	x
Starts/Hour Exceeded	73	x	x
Stall	101	x	x
Comm Fault	102	x	x
Comm Idle Fault	103	x	x
PTC Fault	104	x	
PM Starts	105	x	x
PM Oper Hours	106	x	x
L1 Undercurrent	107		
L2 Undercurrent	108		
L3 Undercurrent	109		
L1Overcurrent	110		
L2Overcurrent	111		
L3Overcurrent	112		

Table 117 - Control Supervisor ODVA Fault and Warning Codes

Warning/Trip Name	Code	EC1, EC2, EC3	EC5
Voltage Hardware	113		x
Over Frequency	114		x
Under Frequency	115		x
Under Real Power kW	116		x
Over Real Power kW	117		x
Under Condumed kVAR	118		x
Over Consumed kVAR	119		x
Under Generated kVAR	120		x
Over Generated kVAR	121		x
Under Power kVA	122		x
Over Power kVA	123		x
Under PF Lagging	124		x
Over PF Lagging	125		x
Under PF Leading	126		x
Over PF Leading	127		x
Power Overflow	128		x

Acknowledge Handler Object – 0x2B

A single instance (instance 1) of the Acknowledge Handler Object is supported. The following instance attributes are supported:

Table 118 - Acknowledge Handler Object Instance Attributes

Attribute ID	Access Rule	Name	Data Type	Value
1	Get/Set	Acknowledge Timer	UINT	in milliseconds
2	Get/Set	Retry Limit	USINT	0 or 1
3	Get	COS Producing Connection Instance	UINT	4

The following common services are implemented for the Acknowledge Handler Object:

Table 119 - Acknowledge Handler Object Common Services

Service Code	Implemented for:		Service Name
	Class	Instance	
0x0E	Yes	Yes	Get_Attribute_Single
0x10	No	Yes	Set_Attribute_Single

Overload Object – Class Code 0x2C

A single instance (instance 1) of the Overload Object is supported. The following instance attributes are supported:

Table 120 - Overload Object Instance Attributes

Attribute ID	Access Rule	Name	Data Type	Value	Default
3	Get/Set	TripFLCSet	INT	See Table 32:	1.0
4	Get/Set	TripClass	USINT	5…30	10
5	Get	AvgCurrent	INT	See Table 34:	0.0
6	Get	%PhImbal	USINT	0…200%	0
7	Get	%Thermal	USINT	0…100%	0
8	Get	CurrentL1	INT	See Table 34:	0.0
9	Get	CurrentL2	INT	See Table 34:	0.0
10	Get	CurrentL3	INT	See Table 34:	0.0
11	Get	Ground Current	INT	0.0…12.7 A	0.0
The following attributes are all vendor specific.					
101	Get	L1 Current	INT	These attributes exist only for current ranges that report 1 or 2 decimal places current resolution	
102	Get	L2 Current	INT		
103	Get	L3 Current	INT		
104	Get	Average Current	INT		
105	Get	L1%FLA	UINT	0…1000 %FLA	0
106	Get	L2%FLA	UINT	0…1000 %FLA	0
107	Get	L3%FLA	UINT	0…1000 %FLA	0
108	Get	Average %FLA	UINT	0…1000 %FLA	0
109	Get	%Therm Utilized	USINT	0…100%	0
110	Get	GF Current	INT	0.00...12.75 A	0.0
111	Get	Current Imbal	USINT	0…200%	0
112	Get	Time to Trip	UINT	0…9999 s	0
113	Get	Time to Reset	UINT	0…9999 s	0
127	Get/Set	Single/Three Ph	BOOL	0 = Single 1 = Three Phase	1
128	Get/Set	FLA Setting	UINT	This attribute exists only for current ranges that report 1 or 2 decimal places current resolution	Current range dependent
129	Get/Set	Trip Class	USINT	5…30	10
132	Get/Set	OL Warn Level	USINT	0…100 %TCU	85
133	Get/Set	PL Inhibit Time	USINT	0…250 seconds	0
134	Get/Set	PL Trip Delay	USINT	0.1…25.0 seconds	1.0
135	Get/Set	GF Inhibit Time	USINT	0…250 seconds	0
136	Get/Set	GF Trip Delay	USINT	0.1…25.0 seconds	0.5
137	Get/Set	GF Trip Level	USINT	1.0…5.0 A	2.5
138	Get/Set	GF Warn Level	USINT	1.0…5.0 A	2.0
139	Get/Set	Stall Enabld Time	USINT	0…250 seconds	0
140	Get/Set	Stall Trip Level	UINT	100…600	600
141	Get/Set	Jam Inhibit Time	USINT	0…250 seconds	0
142	Get/Set	Jam Trip Delay	USINT	0.1…25.0 seconds	5.0

Table 120 - Overload Object Instance Attributes

Attribute ID	Access Rule	Name	Data Type	Value	Default
143	Get/Set	Jam Trip Level	UINT	0…600 %FLA	250
144	Get/Set	Jam Warn Level	UINT	0…600 %FLA	150
145	Get/Set	UL Inhibit Time	USINT	0…250 seconds	10
146	Get/Set	UL Trip Delay	USINT	0.1…25.0 seconds	5.0
147	Get/Set	UL Trip Level	USINT	10…100 %FLA ❶	50
148	Get/Set	UL Warn Level	USINT	10…100 %FLA ❶	70
149	Get/Set	CI Inhibit Time	USINT	0…250 seconds	10
150	Get/Set	CI Trip Delay	USINT	0.1…25.0 seconds	5.0
151	Get/Set	CI Trip Level	USINT	10…100 %FLA	35
152	Get/Set	CI Warn Level	USINT	10…100 %FLA	20
153 ❹	Get/Set	GF Trip Inhibit	USINT	0 = Enabled 1 = Disabled	0
154 ❹	Get/Set	2-Spd Net Enable	USINT	0 = Disabled 1 = Enabled	0
155 ❹	Get/Set	2-Spd FLA Set	UINT	This attribute exists only for current ranetgs that report 1 or 2 decimal places resolution	Current Range Dependent
156 ❹	Get/Set	2-Spd FLA Set Times 10	UINT	This attribute exists only for current ranetgs that report 2 decimal places resolution	Current Range Dependent
157 ❹	Get/Set	2-Spd FLA Set Div 10	UINT	This attribute exists only for current ranetgs that report 0 decimal place resolution	Current Range Dependent
178	Get/Set	CT Ratio	USINT	50:5…5000:5	50:5
180	Get/Set	GF Warning Delay	USINT	0.1 s	
181	Get/Set	GF Ssensing Range	UINT	0 = 20…100 mA 1 = 100…500 mA 2 = 0.2…1.0 mA 3 = 1.0…5.0 mA	
The following attributes are used to support multiple current ranges.					
190❷ 224❸	Get/Set	FLC Set Times 10	UINT	This attribute exists only for current ranges that report 2 decimal place resolution	Current Range Dependent
191❷ 225❸	Get/Set	FLC Set Div 10	UINT	This attribute exists only for current ranges that report 0 decimal place resolution	Current Range Dependent
192❷ 226❸	Get	Avg Current Times 10	UINT	This attribute exists only for current ranges that report 2 decimal place resolution	Current Range Dependent
193❷ 227❸	Get	L1 Current Times 10	UINT	This attribute exists only for current ranges that report 2 decimal place resolution	Current Range Dependent
194❷ 228❸	Get	L2 Current Times 10	UINT	This attribute exists only for current ranges that report 2 decimal place resolution	Current Range Dependent

Table 120 - Overload Object Instance Attributes

Attribute ID	Access Rule	Name	Data Type	Value	Default
195❷ 229❸	Get	L3 Current Times 10	UINT	This attribute exists only for current ranges that report 2 decimal place resolution	Current Range Dependent
196❷ 230❸	Get	Avg Current Div 10	UINT	This attribute exists only for current ranges that report 0 decimal place resolution	Current Range Dependent
197❷ 231❸	Get	L1 Current Div 10	UINT	This attribute exists only for current ranges that report 0 decimal place resolution	Current Range Dependent
198❷ 232❸	Get	L2 Current Div 10	UINT	This attribute exists only for current ranges that report 0 decimal place resolution	Current Range Dependent
199❷ 233❸	Get	L3 Current Div 10	UINT	This attribute exists only for current ranges that report 0 decimal place resolution	Current Range Dependent

❶ 50…100% for devices with FRN 1.003 and earlier.
❷ FRN 2.000 and later.
❸ FRN 1.003 and earlier.
❹ FRN 3.001 and later.

The following common services are implemented for the Overload Object:

Table 121 - Overload Object Common Services

Service Code	Implemented for:		Service Name
	Class	Instance	
0x0E	Yes	Yes	Get_Attribute_Single
0x10	No	Yes	Set_Attribute_Single

DPI Fault Object - CLASS CODE 0x0097

This object provides access to fault information within the device. The following class attributes will be supported:

Table 122 - Fault Object Instance Attributes

Attribute ID	Access Rule	Name	Data Type	Value
1	Get	Class Revision	UINT	1
2	Get	Number of Instances	UINT	5
3	Get/Set	Fault Cmd Write	USINT	0=NOP; 1=Clear Fault; 2=Clear Flt Queue
4	Get	Fault Instance Read	UINT	The instance of the Fault Queue Entry containing information about the Fault that tripped the Device
6	Get	Number of Recorded Faults	UINT	The number of Faults recorded in the Fault Queue

Five instances of the DPI Fault Object will be supported.

Table 123 -

Attribute ID	Access Rule	Name	Data Type	Value
0	Get	Full/All Info	Struct of:	
		Fault Code	UINT	See Table 124 -
		Fault Source	Struct of:	
		DPI Port Number	USINT	0
		Device Object Instance	USINT	0x2c
		Fault Text	BYTE[16]	See Table 124 -
		Fault Time Stamp	Struct of:	
		Timer Value	ULDINT	
		Timer Descriptor	WORD	
		Help Object Instance	USINT	
		Fault Data		
1	Get	Basic Info	Struct of:	
		Fault Code	UINT	See Table 124 -
		Fault Source	Struct of:	
		DPI Port Number	USINT	0
		Device Object Instance	USINT	0x2C
		Fault Time Stamp	Struct of:	
		Timer Value	ULINT	
		Timer Descriptor	WORD	
3	Get	Help Text	STRING	See Table 124 - below

The following common services will be implemented for the DPI Fault Object.

Service Code	Implemented for:		Service Name
	Class	Instance	
0x0E	Yes	Yes	Get_Attribute_Single
0x10	Yes	No	Set_Attribute_Single

The table below lists EC1, EC2, EC3 and EC5 Fault Codes, Fault Text, and Fault Help Strings.

Table 124 - EC1, EC2, EC3 and EC5 Fault Codes, Fault Text, and Fault Help Strings

Fault Code	Fault Text	Help Text
0	No Fault	No Fault Conditions Detected
1	Test Trip	Test trip caused by holding the Test/Rest button for 2 seconds
2	Overload	Motor current overload condition
3	Phase Loss	Phase current Loss detected in one of the motor phases
4	Ground Fault	Power conductor or motor winding is shorting to ground
5	Stall	Motor has not reached full speed by the end of Stall Enable Time

Table 124 - EC1, EC2, EC3 and EC5 Fault Codes, Fault Text, and Fault Help Strings

Fault Code	Fault Text	Help Text
6	Jam	Motor current has exceed the programmed jam trip level
7	Underload	Motor current has fallen below normal operating levels
8	PTC	PTC input indicates that the motor stator windings overheated
9	Current Imbal	Phase to phase current imbalance detected
10	Comm Fault	DeviceNet communication loss detected
11	Comm Idle	DeviceNet idle condition detected
12	NonVol Mem	Internal memory failure. Contact the factory.
13	Hardware Fault	Hardware configuration fault. Check for shorts on input terminal
14	Fault 14	
15	Remote Trip	Remote trip command detected
16	Blocked Start	Maximum starts per hour exceeded
17	Voltage Hdw Flt	A problem with the external voltage hardware has been detected
18	Under Volt L-L	Line to Line Under-Voltage condition detected
19	Over Volt L-L	Line to Line Over-Voltage condition detected
20	Voltage Unbal	Phase to phase voltage imbalance detected
21	Phase Rotation	The unit detects the supply voltage phases are rotated
22	Under Frequency	Line voltage frequency is below trip level
23	Over Frequency	Line voltage frequency has exceeded trip level
24	Fault 24	
25	Fault 25	
26	Fault 26	
27	Fault 27	
28	Fault 28	
29	Fault 29	
30	Fault 30	
31	Fault 31	
32	Fault 32	
33	Under Real Pwr	Total Real Power(kW)is below trip level
34	Over Real Pwr	Total Real Power(kW)has exceeded trip level
35	Under Con kVAR	Under Total Reactive Power Consumed (+kVAR) condition detected
36	Over Con kVAR	Over Total Reactive Power Consumed (+kVAR) condition detected
37	Under Gen kVAR	Under Total Reactive Power Generated (-kVAR) condition detected
38	Over Gen kVAR	Over Total Reactive Power Generated (-kVAR) condition detected
39	Under Power kVA	Total Apparent Power (VA or kVA or MVA) is below trip level
40	Over Power kVA	Total Apparent Power (VA or kVA or MVA) exceeded trip level
41	Under PF Lagging	Under Total Power Factor Lagging (-PF) condition detected

Table 124 - EC1, EC2, EC3 and EC5 Fault Codes, Fault Text, and Fault Help Strings

Fault Code	Fault Text	Help Text
42	Over PF Lagging	Over Total Power Factor Lagging (-PF) condition detected
43	Under PF Leading	Under Total Power Factor Leading (+PF) condition detected
44	Over PF Leading	Over Total Power Factor Leading (+PF) condition detected
45	Power Overflow	kW, kVAR or kVA has exceeded its maximum display value
46	Fault 46	
47	Fault 47	
48	Fault 48	

DPI Warning Object - CLASS CODE 0x0098

This object provides access to warning information within the device. The following class attributes will be supported:

Table 125 -

Attribute ID	Access Rule	Name	Data Type	Value
1	Get	Class Revision	UINT	1
2	Get	Number of Instances	UINT	4
3	Get/Set	Fault Cmd Write	USINT	0=NOP; 1=Clear Fault; 2=Clear Flt Queue
4	Get	Fault Instance Read	UINT	The instance of the Fault Queue Entry containing information about the Fault that tripped the Device
6	Get	Number of Recorded Faults	UINT	The number of Faults recorded in the Fault Queue

Four instances of the DPI Warning Object will be supported.

Table 126 - DPI Warning Object Instances

Attribute ID	Access Rule	Name	Data Type	Value
0	Get	Full/All Info	Struct of:	
		Fault Code	UINT	See Table 127 -
		Fault Source	Struct of:	
		DPI Port Number	USINT	0
		Device Object Instance	USINT	0x2c
		Fault Text	BYTE[16]	See Table 127 -
		Fault Time Stamp	Struct of:	
		Timer Value	ULDINT	
		Timer Descriptor	WORD	
		Help Object Instance	USINT	
		Fault Data		

Table 126 - DPI Warning Object Instances

Attribute ID	Access Rule	Name	Data Type	Value
		Basic Info	Struct of:	
		Fault Code	UINT	See Table 127 -
		Fault Source	Struct of:	
		DPI Port Number	USINT	0
1	Get	Device Object Instance	USINT	0x2C
		Fault Time Stamp	Struct of:	
		Timer Value	ULINT	
		Timer Descriptor	WORD	
3	Get	Help Text	STRING	See Table 127 -

The following common services will be implemented for the DPI Fault Object.

Service Code	Implemented for:		Service Name
	Class	Instance	
0x0E	Yes	Yes	Get_Attribute_Single
0x10	Yes	No	Set_Attribute_Single

The table below lists EC1, EC2, EC3, EC5 Warning Codes, Warning Text, and Warning Help Strings.

Table 127 - EC1, EC2, EC3, EC5 Warning Codes, Warning Text, and Warning Help Strings

Fault Code	Fault Text	Help Text
0	No Warning	No Warning Conditions Detected
1	Warning 1	
2	Overload	Approaching a motor current overload condition
3	Warning 3	
4	Ground Fault	Power conductor or motor winding is shorting to ground
5	Warning 5	
6	Jam	Motor current has exceed the programmed jam warning level
7	Underload	Motor current has fallen below normal operating levels
8	PTC	PTC input indicates that the motor stator windings overheated
9	Current Imbal	Phase to phase current imbalance detected
10	Comm Fault	DeviceNet communication loss detected
11	Comm Idle	DeviceNet idle condition detected
12	Warning 12	
13	Config Fault	Device parameter configuration problem
14	PM Starts	Number of Starts Warning Level Exceeded
15	PM Oper Hours	Operating Hours Warning Level Exceeded
16	Warning 16	

Table 127 - EC1, EC2, EC3, EC5 Warning Codes, Warning Text, and Warning Help Strings

Fault Code	Fault Text	Help Text
17	Voltage Hdw Flt	A problem with the external voltage hardware has been detected
18	Under Volt L-L	Line to Line Under-Voltage condition detected
19	Over Volt L-L	Line to Line Over-Voltage condition detected
20	Voltage Unbal	Phase to phase voltage imbalance detected
21	Phase Rotation	The unit detects the supply voltage phases are rotated
22	Under Frequency	Line voltage frequency is below the warning level
23	Over Frequency	Line voltage frequency has exceeded warning level
24	Warning 24	
25	Warning 25	
26	Warning 26	
27	Warning 27	
28	Warning 28	
29	Warning 29	
30	Warning 30	
31	Warning 31	
32	Warning 32	
33	Under Real Pwr	Total Real Power (kW)is below warning level
34	Over Real Pwr	Total Real Power (kW)has exceeded warning level
35	Under Fwd kVAR	Under Total Reactive Power Forward (+kVAR) condition detected
36	Over Fwd kVAR	Over Total Reactive Power Forward (+kVAR) condition detected
37	Under Rev kVAR	Under Total Reactive Power Reverse (-kVAR) condition detected
38	Over Rev kVAR	Over Total Reactive Power Reverse (-kVAR) condition detected
39	Under Power kVA	Total Apparent Power (VA or kVA or MVA) is below warning level
40	Over Power kVA	Total Apparent Power (VA OR Kva or MVA) exceeded warning level
41	Under PF Lagging	Under Total Power Factor Lagging (-PF) condition detected
42	Over PF Lagging	Over Total Power Factor Lagging (-PF) condition detected
43	Under PF Leading	Under Total Power Factor Leading (+PF) condition detected
44	Over PF Leading	Over Total Power Factor Leading (+PF) condition detected
45	Power Overflow	kW, kVAR or kVA has exceeded its maximum display value
46	Warning 46	
47	Warning 47	
48	Warning 48	

DeviceNet Interface Object – Class Code 0xB4

This "vendor specific"object includes no class attributes. A single instance (instance 1) of the DeviceNet Interface Object is supported. The following instance attributes are supported.

Table 128 - DeviceNet Interface Object Instance Attributes

Attribute ID	Access Rule	Name	Data Type	Min/Max	Default	Desc.
1	Get	Zero Byte	USINT	0	0	Always returns zero
2	Get	Zero Word	UINT	0	0	Always returns zero
5	Get/Set	Nonvolatile MAC ID	USINT	0 .. 63	63	
6	Get/Set	Nonvolatile Baud	USINT	0 .. 2	0	
7	Get/Set	Prod Assy Word 0	USINT	Min = 0 Max = maximum param inst #	21	Defines Word 0 of Assy 100
8	Get/Set	Prod Assy Word 1	USINT		1	Defines Word 1 of Assy 100
9	Get/Set	Prod Assy Word 2	USINT		2	Defines Word 2 of Assy 100
10	Get/Set	Prod Assy Word 3	USINT		3	Defines Word 3 of Assy 100
12	Get	Firmware Rev	UINT	0 .. 65.535	3.001	Firmware rev in EDS parameter format
13	Get/Set	COS Mask	WORD	0 – 0xFFFF	0xFFFF	Change of state mask
15	Get/Set	Autobaud Enable	BOOL	0 – 1	1	1= enabled; 0 = disabled
16	Get/Set	Consumed Assy	USINT			Output Assembly Instance
17	Get/Set	Produced Assy	USINT			Input Assembly Instance
18	Get/Set	Param Lock	BOOL	0 .. 1	0	0=Unlocked; 1=Locked
19	Get/Set	Set To Defaults	BOOL	0 to 1	0	0=No action; 1=Reset
20	Get	Device Configuration	WORD	0 to 0x3F	0	Bit 0 = 4 In/2 out hardware present Bit 1 = PTC hardware present Bit 2 = GF hardware present Bit 3 = External GF present Bit 4 = Heat Trace unit Bit 5 = Voltage hardware present
50	Get/Set	PNB COS Mask	WORD	0 to 0x00FF	0	Change of state mask for PNBs

Table 129 - DeviceNet Interface Object Common Services

Service Code	Implemented for:		Service Name
	Class	Instance	
0x0E	No	Yes	Get_Attribute_Single
0x10	No	Yes	Set_Attribute_Single

MCC Object - CLASS CODE 0x00C2

A single instance (instance 1) of the MCC Object will be supported:

Table 130 - MCC Object Instance Attributes

Attribute ID	Access Rule	Name	Data Type	Range	Value
1	Get/Set	Mcc Number	USINT	0…255	0
2	Get/Set	Vertical Section Number	USINT	0…255	0
5	Get/Set	Strarting Section Letter	USINT	0…255	65
6	Get/Set	Space Factors	USINT	0…255	0x3F
7	Get/Set	Cabinet Width	USINT	0…255	0
8	Get/Set	Mcc Number	USINT	0…255	0
9	Get	Number of Device Inputs	USINT		EC1=2 EC2=EC3=EC4=4 EC5=6
10	Get/Set	Devices Connected at Inputs	Array of USINT		00000000000000

The following common services will be implemented for the MCC Object:

Table 131 - MCC Object Common Services

Service Code	Implemented for:		Service Name
	Class	Instance	
0x0E	No	Yes	Get_Attribute_Single
0x10	No	Yes	Set_Attribute_Single
0x18	No	Yes	Get_Member
0x19	No	Yes	Set_Member

Logic Supervisor Object - CLASS CODE 0x030E

A single instance (instance 1) will be supported. The following instance attributes will be supported.

Table 132 - Logic Supervisor Object Instance Attributes

Attribute ID	Access Rule	Name	Data Type	Range	Value
1	Get/Set	Logic Enable	BOOL	0=Logic Disabled 1=Logic Enabled	0
2	Get	Data Table	Array of BYTE	The Standard Bit Table	0
5	Get	Last Error	UDINT	Last error code	65
6	Get	FB Classes Implemented	STRUCT of: USINT Array of UINT	4 775, 776, 777, 778	0x3F

The following common services will be implemented for the Logic Supervisor Object.

Table 133 - Logic Supervisor Object Common Services

Service Code	Implemented for:		Service Name
	Class	Instance	
0x08	No	Yes	Reset
0x0E	No	Yes	Get_Attribute_Single
0x10	No	Yes	Set_Attribute_Single

E3 Status Object - CLASS CODE 0x0375

The following instance attributes are for EC1, EC2, EC3, and EC5:

Table 134 - E3 Status Object Instance Attributes

Attribute	Name	Byte	Data
1	Phase / Gnd Currents	0	L1 Current
		1	
		2	L2 Current
		3	
		4	L3 Current
		5	
		6	Average Current
		7	
		8	Ground Current (Reserved in EC1 and C1. Returns 0)
		9	
2	Motor Load	0	L1 %FLA
		1	
		2	L2 %FLA
		3	
		4	L3 %FLA
		5	
		6	Average %FLA
		7	
		8	Current Imbal
		9	
3	Overload Data	0	OL Time to Trip
		1	
		2	OL Time to Reset
		3	
		4	%Therm Utilized
		5	
4	Current Trip / Warning	0	Current Trip Status
		1	
		2	Current Trip Warning
		3	

Table 134 - E3 Status Object Instance Attributes

Attribute	Name	Byte	Data
5	Current Trip Log	0	Current Trip Log 0
		1	
		2	Current Trip Log 1
		3	
		4	Current Trip Log 2
		5	
		6	Current Trip Log 3
		7	
		8	Current Trip Log 4
		9	
6	Device Data	0	Device Status
		1	
		2	Firmware
		3	
		4	Device Configuration
		5	
7	Current Warning Log	0	Current Warn Log 0
		1	
		2	Current Warn Log 1
		3	
		4	Current Warn Log 2
		5	
		6	Current Warn Log 3
		7	
		8	Current Warn Log 4
		9	
8	Motor Statistics	0	Elapsed Time
		1	
		2	Starts Counter
		3	
		4	Starts Available
		5	
		6	Time to Start
		7	
9	Network Outputs	0	Network Outputs
		1	
10	Trip History	0	Trip History 0
		1	
		2	Trip History 1
		3	
		4	Trip History 2
		5	
		6	Trip History 3
		7	
		8	Trip History 4
		9	

Table 134 - E3 Status Object Instance Attributes

Attribute	Name	Byte	Data
11	Warning History	0	Warn History 0
		1	
		2	Warn History 1
		3	
		4	Warn History 2
		5	
		6	Warn History 3
		7	
		8	Warn History 4
		9	
12	Trip Snapshot Note that the EC1, EC2 and EC3 return a snapshot of 10 bytes only. EC5 returns 24 bytes	0	SS L1 Current
		1	
		2	SS L2 Current
		3	
		4	SS L3 Current
		5	
		6	SS % TCU
		7	
		8	SS GF Current
		9	
		10	SS L1-L2 Voltage (EC5 Only)
		11	
		12	SS L2-L3 Voltage (EC5 Only)
		13	
		14	SS L3-L1 Voltage (EC5 Only)
		15	
		16	SS Total Real Power (EC5 Only)
		17	
		18	SS Total kVAR (EC5 Only)
		19	
		20	SS Total kVA (EC5 Only)
		21	
		22	SS Total PF (EC5 Only)
		23	
13	Voltage Trip/Warn (EC5 only)	0	Voltage Trip Status
		1	
		2	Voltage Warning Status
		3	
14	Line Voltages (EC5 only)	0	L1-L2 Voltage
		1	
		2	L2-L3 Voltage
		3	
		4	L3-L1 Voltage
		5	
		6	Ave Voltage L-L
		7	

Table 134 - E3 Status Object Instance Attributes

Attribute	Name	Byte	Data
15	Line - Neutral Voltages (EC5 only)	0	L1-N Voltage
		1	
		2	L2-N Voltage
		3	
		4	L3-N Voltage
		5	
		6	Ave Voltage N
		7	
16	Voltage Phase Data (EC5 only)	0	Voltage Unbalance
		1	
		2	Voltage Frequency
		3	
		4	Voltage Phase Rotation
		5	
17	Real Power (EC5 only)	0	L1 Real Power
		1	
		2	L2 Real Power
		3	
		4	L3 Real Power
		5	
		6	Total Real Power
		7	
18	Reactive Power (EC5 only)	0	L1 Reactive Power
		1	
		2	L2 Reactive Power
		3	
		4	L3 Reactive Power
		5	
		6	Total Reactive Power
		7	
19	Apparent Power (EC5 only)	0	L1 Apparent Power
		1	
		2	L2 Apparent Power
		3	
		4	L3 Apparent Power
		5	
		6	Total Apparent Power
		7	
20	Power Factor (EC5 only)	0	L1 Power Factor
		1	
		2	L2 Power Factor
		3	
		4	L3 Power Factor
		5	
		6	Total Power Factor
		7	

Table 134 - E3 Status Object Instance Attributes

Attribute	Name	Byte	Data	
21	Real Energy (EC5 only)	0	Total Real Energy	kWh x 10E6
		1		
		2		kWh x 10E3
		3		
		4		kWh x 10E0
		5		
		6		kWh x 10E-3
		7		
22	Reactive Energy (EC5 only)	0	Total Reactive Energy Consumed	kVARh x 10E6
		1		
		2		kVARh x 10E3
		3		
		4		kVARh x 10E0
		5		
		6		kVARh x 10E-3
		7		
		8	Total Reactive Energy Generated	kVARh x 10E6
		9		
		10		kVARh x 10E3
		11		
		12		kVARh x 10E0
		13		
		14		kVARh x 10E-3
		15		
		16	Total Reactive Energy Net	kVARh x 10E6
		17		
		18		kVARh x 10E3
		19		
		20		kVARh x 10E0
		21		
		22		kVARh x 10E-3
		23		
23	Total Apparent Energy (EC5 only)	0	Total Apparent Energy	kVAh X 10E6
		1		
		2		kVAh X 10E3
		3		
		4		kVAh x 10E0
		5		
		6		kVAh X 10E-3
		7		

Table 134 - E3 Status Object Instance Attributes

Attribute	Name	Byte	Data
24	Energy (EC5 only)	0	Total Real Energy (MWh) 32-bit Floating Point
		1	
		2	
		3	
		4	Total Reactive Energy Consumed (VARh) 32-bit Floating Point
		5	
		6	
		7	
		8	Total Reactive Energy Generated (VARh) 32-bit Floating Point
		9	
		10	
		11	
		12	Total Reactive Energy Net (VARh) 32-bit Floating Point
		13	
		14	
		15	
		16	Total Apparent Energy (VAh) 32-bit Floating Point
		17	
		18	
		19	
25	Demand (EC5 only)	0	kW Demand
		1	
		2	VAR Demand
		3	
		4	VA Demand
		5	
26	Peak Demand	0	Max kW Demand
		1	
		2	Max VAR Demand
		3	
		4	Max VA Demand
		5	
27	Power Trip/Warn	0	Power Trip Status
		1	
		2	Power Warning Status
		3	

The following common services will be implemented.

Table 135 - E3 Status Object Common Services

Service Code	Implemented for:		Service Name
	Class	Instance	
0x03	No	Yes	Get_Attribute_List
0x0E	No	Yes	Get_Attribute_Single

CE Compliance

The E3 Overload Relay is intended for use in a heavy industrial environment. It is CE marked for conformity to the Low Voltage Directive 73/23/EEC (as amended by 93/68/EEC) and the EMC Directive 89/336/EEC (as amended by 92/31/EEC and 93/68/EEC) when installed as described in this manual.

IMPORTANT The conformity of the E3 Overload Relay to these standards **does not** guarantee that an entire installation will conform. Many other factors can influence the entire installation and only direct measurements can verify total system conformity. It is therefore the responsibility if the installer to ensure system conformity.

EC Directive Compliance

To obtain a copy of the E3 Overload Relay's Declaration of Conformity (DoC), contact your local Rockwell Automation sales office or Allen-Bradley distributor or go to http://www.ab.com/certification/#CEmark.

EMC Directive

This product is tested to meet Electromagnetic Compatibility (EMC) Directive 89/336/EC, as amended by 92/31/EEC and 93/68/EEC, by applying the following standards (in whole or in part), and as documented in a technical construction file:

- EN 60947-4-1 – Low Voltage Switchgear and Control Gear; Part 4 – Contactors and Motor Starters, Section 1 – Electromechanical Contactors and Motor Starters
- EN 60947-5-1 – Low Voltage Switchgear and Control Gear; Part 5 – Control Circuit Devices and Switching Devices, Section 1 – Electromechanical Control Circuit Devices

IMPORTANT The grounding requirements specified in this manual must be followed by the installer in order for the product to comply with the EMC directive.

ATTENTION: This is a Class A (heavy industrial) product. In a Class B (light industrial or domestic) environment, this product may cause radio interference in which case the installer may be required to take additional measures to mitigate it.

Low Voltage Directive

This product is tested to meet Low Voltage Directive 73/23/EEC, as amended by 93/68/EEC, by applying the following standards (in whole or in part), and as documented in a technical construction file:

- EN 60947-4-1 – Low Voltage Switchgear and Control Gear; Part 4 – Contactors and Motor Starters, Section 1 – Electromechanical Contactors and Motor Starters
- EN 60947-5-1 – Low Voltage Switchgear and Control Gear; Part 5 – Control Circuit Devices and Switching Devices, Section 1 – Electromechanical Control Circuit Devices
- EN 60947-8 – Low Voltage Switchgear and Control Gear Standard; Part 8 – Control Units for Built-in Thermal Protection (PTC) for rotating electrical machines

Two-Speed Applications

Introduction

The E3 Plus Overload Relay Series B and later provides 2-Speed FLA Set, Parameter 88, for use in two-speed motor applications. This appendix provides overview and guidance on various methods that can be employed to protect two-speed motors.

External Control Applications

For applications in which the two-speed starter control is accomplished externally from the E3 Plus outputs, an auxiliary contact associated with the high speed contactor is wired to one of the E3 Plus inputs. The corresponding input assignment Parameter 83...86 is set to "2-Speed". The overload function's thermal capacity utilized (TCU) calculation is based on the Parameter 88 setting when the two-speed assigned input is asserted.

Output Control Applications

For applications that use the integral outputs of the E3 Plus, Out A is used to control the low speed contactor and Out B is used to control the high speed contactor. Control can be accomplished through commands transmitted by the network master or internal DeviceLogix function blocks. When 2-Spd Net Enable, Parameter 87, is set to "1" or "Enable", the overload function's TCU calculation is based on the 2-Speed FLA Set, Parameter 88, setting when Out B is commanded closed.

Accessories

Accessories

Table 136 - Accessories

Accessory Description		Used With: Bulletin Type	Used With: Adjustment Range	Accessory Catalog Number
Panel Mount Adapter		193-EC_	B	193-ECPM1
			D, Z	193-ECPM2
			E	193-ECPM3
AC Input Interface Module		193-EC_	All Ranges	193-EIMD
		592-EC_	All Ranges	
AC Input Interface Module for Electrically Noisy Environments		193-EC_	All Ranges	193-EIMD60
		592-EC_	All Ranges	
Programming & Control Terminal		193-EC_	All Ranges	193-DNCT
		592-EC_	All Ranges	
Panel Mount Bezel for Programming & Control Terminal		193_DNCT	—	193-DNCTBZ1
DeviceNet to EtherNet/IP Communications Bridge	Single Port	193-EC_, 592-EC_	All Ranges	193-DNENCAT
	Dual Port	193-EC_, 592-EC_	All Ranges	193-DNENCATR
Ground Fault Sensors (Core Balance Current Transformer)				
E3 Plus Series A & B		193-EC2_	F, G, H, Z	825-CBCT
		592-EC2_	E, F, G	
E3 Plus Series C & Later		193-EC3_	All Ranges	193-CBCT1 193-CBCT2 193-CBCT3 193-CBCT4
		592-EC3_		
		193-EC5_		
		592-EC5_		
Replacement Parts				
Relay		193-EC1_	F, G, H	193-NREC1ZZ
		592-EC1_	E, F, G	
		193-EC3_	F, G, H	193-NREC3ZZ
		592-EC3_	E, F, G	
		193-EC5_	F, G, H	193-NREC5ZZ
		592-EC5_	E, F, G	
Voltage Input Module		193-EC	All Models	193-NVEC5VIM
		592-EC		
Connectors & Ribbon Cable		193-EC	All Models	193-NCEC5CNT
		592-EC		

Rockwell Automation Support

Rockwell Automation provides technical information on the Web to assist you in using its products. At http://www.rockwellautomation.com/support/, you can find technical manuals, a knowledge base of FAQs, technical and application notes, sample code and links to software service packs, and a MySupport feature that you can customize to make the best use of these tools.

For an additional level of technical phone support for installation, configuration, and troubleshooting, we offer TechConnect support programs. For more information, contact your local distributor or Rockwell Automation representative, or visit http://www.rockwellautomation.com/support/.

Installation Assistance

If you experience an anomoly within the first 24 hours of installation, review the information that is contained in this manual. You can contact Customer Support for initial help in getting your product up and running.

United States or Canada	1.440.646.3434
Outside United States or Canada	Use the Worldwide Locator at http://www.rockwellautomation.com/support/americas/phone_en.html, or contact your local Rockwell Automation representative.

New Product Satisfaction Return

Rockwell Automation tests all of its products to ensure that they are fully operational when shipped from the manufacturing facility. However, if your product is not functioning and needs to be returned, follow these procedures.

United States	Contact your distributor. You must provide a Customer Support case number (call the phone number above to obtain one) to your distributor to complete the return process.
Outside United States	Please contact your local Rockwell Automation representative for the return procedure.

Documentation Feedback

Your comments will help us serve your documentation needs better. If you have any suggestions on how to improve this document, complete this form, publication RA-DU002, available at http://www.rockwellautomation.com/literature/.

www.rockwellautomation.com

Power, Control and Information Solutions Headquarters

Americas: Rockwell Automation, 1201 South Second Street, Milwaukee, WI 53204 USA, Tel: (1) 414.382.2000, Fax: (1) 414.382.4444
Europe/Middle East/Africa: Rockwell Automation, Vorstlaan/Boulevard du Souverain 36, 1170 Brussels, Belgium, Tel: (32) 2 663 0600, Fax: (32) 2 663 0640
Asia Pacific: Rockwell Automation, Level 14, Core F, Cyberport 3, 100 Cyberport Road, Hong Kong, Tel: (852) 2887 4788, Fax: (852) 2508 1846

Rockwell Automation Publication 193-UM002I-EN-P - December 2011
Supersedes Publication 193-UM002H-EN-P - June 2011
Copyright © 2011 Rockwell Automation, Inc. All rights reserved. Printed in the U.S.A.