Installation Instructions

Original Instructions

Allen-Bradley

PHOTOSWITCH Series 5000 Modular Photoelectric Sensors

Catalog Numbers 42MRU-5000, 42MRU-5200, 42MRP-5000, 42MRR-5000, 42MRL-5000, 42MRA-5000-FO, 42MRF-5000-FO, 42MRA-5000-FF, 42MRA-5000-WA, 42MRP-5000P, 42MRF-5000-FF, 42MRF-5000-WA, 42MTB-5000, 42MTB-5001, 42MTB-5003, 42MTB-5004, 42MTB-5002, 42MTB-5000QD5-1, 42MTB-5004QD4-1

Topic	Page
Summary of Changes	1
Description	1
Features	1
Operating Distance Selection	1
Specifications	2
Terminal Style Power Base Wiring Diagrams	3
Mini Quick-disconnect Wiring Diagrams	3
Typical Response Curves	4
Terminal-style Power Base Dimensions [mm (in.)]	5
Cable-style Power Base Dimensions	5
QD-style Power Base Dimensions [mm (in.)]	5
Lens Assembly Accessories	5
Right Angle Mirror Adapter Accessories [mm (in.)]	5
General-purpose Mounting Assembly	6
Heavy-duty Mounting Assembly [mm (in.)]	6

Summary of Changes

Updated terminal-style power base wiring diagram for Catalog Number 42MTB-5004.

Description

Series 5000 Modular Photoelectric Sensors consist of two major components: a photohead and a power base. The photohead that houses most of the electronics can be quickly removed from the power base with a turn of a screw. If an application changes, a switch to one of several other Series 5000 sensing modes is quick and easy—no rewiring or realignment. Six product families within the PHOTOSWITCH® Series 5000 product line can solve many difficult industrial-photoelectric applications.

Features

- Modular package for increased flexibility
- Wide variety of sensing modes
- Selectable light/dark operation
- Both NPN and PNP outputs
- Screw terminal connections

Operating Distance Selection

Install the sensor in a relatively clean environment to maximize operating distance. Normal industrial environments range from moderately dusty to dirty. Greater operating margin can be required, which can be obtained by reducing the operating distance of the sensor.

Specifications

All Sensors	Retroreflective	Polarized Retroreflective	Standard/Long-Range Diffuse	Transmitted Beam		Glass Fiber-optic	Plastic Fiber-optic	Fixed Focus Diffuse	Wide Angle Diffuse
Sensor Type				**Receiver**	**Light Source**				
Sensing Distance	10 m (33 ft)	6 m (20 ft)	3 m (10 ft)/ 4.8 m (16 ft)	170 m (560 ft)	—	Depends on fiber-optic cable		(IR) 127 mm (5 in.) (VR) 101.6 mm (4 in.)	(IR) 508 mm (20 in.) (VR) 177.8 mm (7 in.)
Transmitting LED	Infrared 880 nm	Visible red 660 nm	Infrared 880 nm				Visible red 660 nm	—	—
Indicators	Red: Output								
Field of View	2.5°		3.0°		—	Depends on fiber-optic cable		—	—
Sensitivity Adjustment	Yes								
Operating Temperature	EM Relay: -40…+65 °C (-40…+150 °F) SS Relay: -40…+52 °C (-40…+125 °F)								
Relative Humidity	90% maximum								
Housing/Lens Material	Valox®/Acrylic (Polarized Retroreflective = Valox/Glass)								
Cover Gasket Material	Nitrile								
Operating Environment	NEMA 3, 4, 12, 13, and IP66 (IEC 529), corrosion resistant, high-impact housing								
Approvals	UL Listed, CSA Certified (except cable style power base), and CE Marked for all applicable directives								
Protections	Power on False Pulse protection								
Vibration	10…55 Hz, 1 mm (0.04 in.) amplitude; meets or exceeds IEC 947-5-2								
Shock	30 g (1.06 oz), meets or exceeds IEC 947-5-2								
Photohead									
Catalog Number	42MRU-5000	42MRU-5200	42MRP-5000	42MRR-5000	42MRL-5000	42MRA-5000-F0	42MRF-5000-F0	42MRA-5000-FF	42MRA-5000-WA
	—	—	42MRP-5000P	—	—	—	—	42MRF-5000-FF	42MRF-5000-WA
Output Energized	L.O./D.O. Selectable								
Load Current	See Specifications for plug-in output module								
Leakage Current	See Specifications for plug-in output module								
Response Time	1 ms + module	2.5 ms + module		5 ms + module	—	2.5 ms + module			
Base									
Operating Voltage	120V AC	240V AC	24V AC	24V DC	—				
Catalog Number Terminal	42MTB-5000	42MTB-5001	42MTB-5003	42MTB-5004	—	—	42MTB-5002	—	—
Catalog Number Mini QD	42MTB-5000QD5-1	—	—	42MTB-5004QD4-1	—	—	—	—	—
Supply Voltage	102…132V AC	204…254V AC	20…30V AC	20…30V AC	—	—	40…54V AC	—	—
Power Consumption	2V A	4V A	1V A	1V A	—	—	1V A	—	—
Plug-in Output Module									
Catalog Number	8-590	8-594 (5004 only)	8-591	8-592	8-593 (5004 only)	—	—	—	—
Output Type	SPDT EM Relay		SP NO FET SS	SP NO AC TRIAC	NPN and PNP	—	—	—	—
Output Range	2 A @ 120V AC 1 A @ 240V AC		30 mA @ 0…120V AC/DC	0.75 A @ 24…240V AC	100 mA @ 30V DC	—	—	—	—
Leakage Current	—	—	10 µA	1 mA	1 µA	—	—	—	—
Response Time	ON: 10 ms - OFF: 15 ms		1 ms	8 ms	1 ms	—	—	—	—
Plug-in Function Module									
Catalog Number	60-1790	60-1791	60-1798	60-1792	60-1793	60-1794	60-1795	60-1796	60-1797
Function	ON/OFF delay			One Shot		Delayed One Shot		Motion Detector	
ON Delay Adjustment	0.05…1.0	0.5…10	0.5…15	—	—	0.1…1.5	1.0…15	—	—
OFF Delay Adjustment	0.05…1.5	2.0…4.0	2.0…6.0	—	—	—	—	0.05…1.5	0.05…1.
Adjustable Dwell	ON/OFF delay			0.005-0.5	0.5…15	0.02…0.2	—	—	—

Terminal Style Power Base Wiring Diagrams

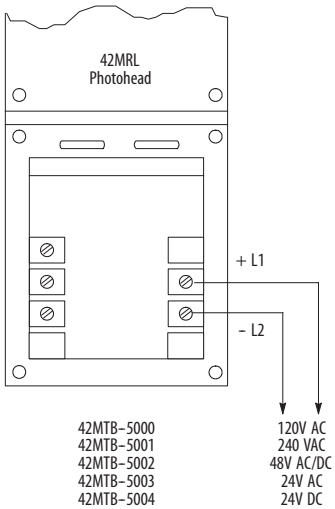

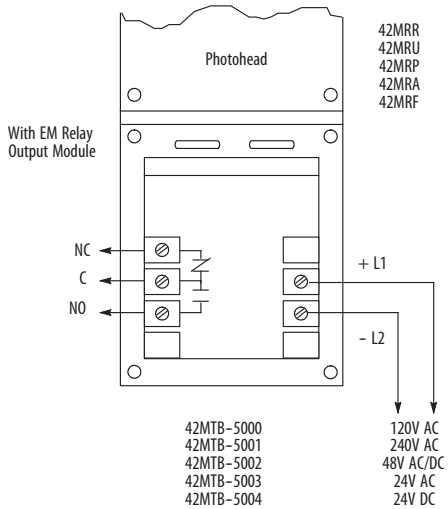

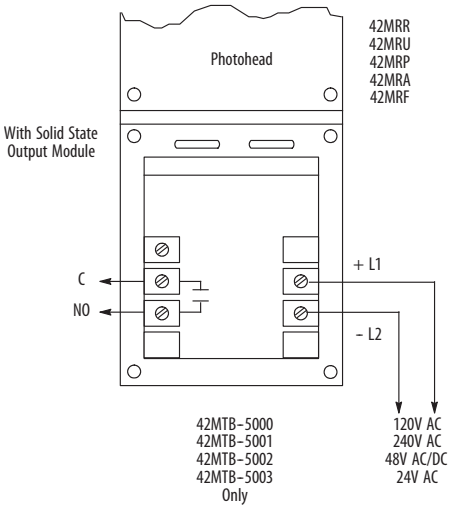

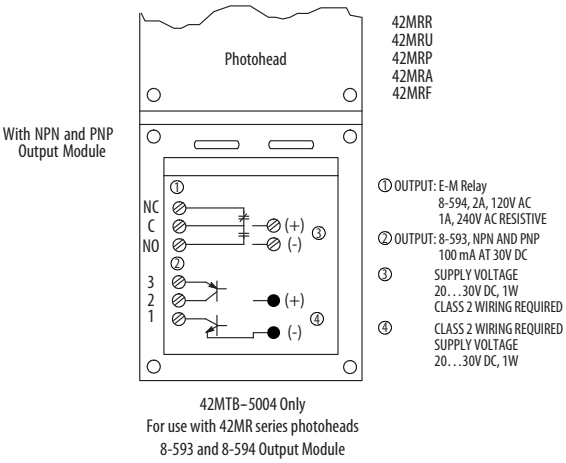

Mini Quick-disconnect Wiring Diagrams

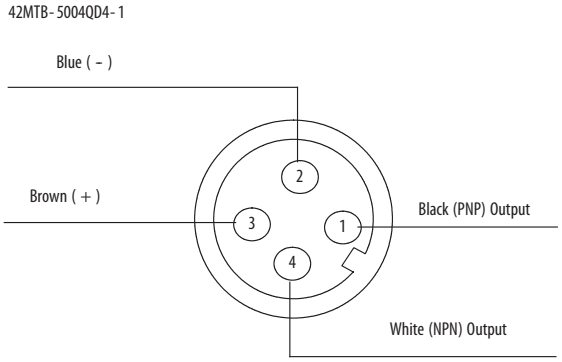

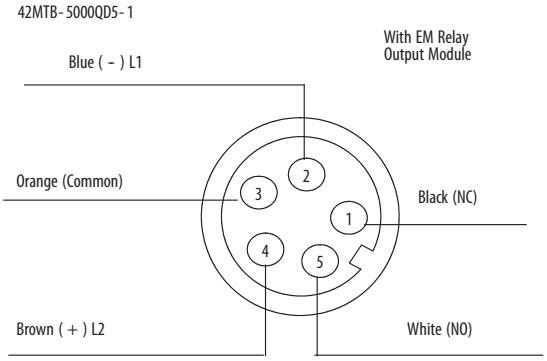

Typical Response Curves

Retroreflective

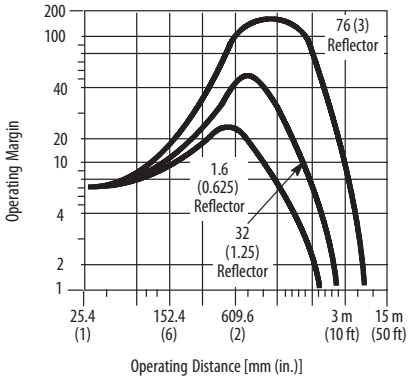

Polarized Retroreflective

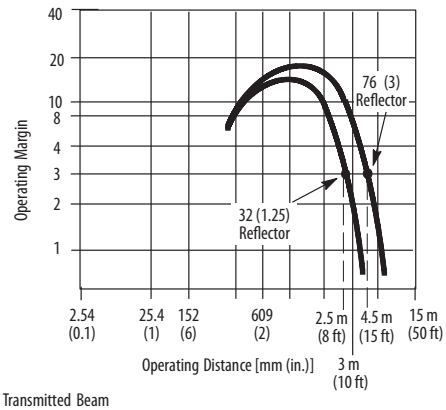

Standard Diffuse

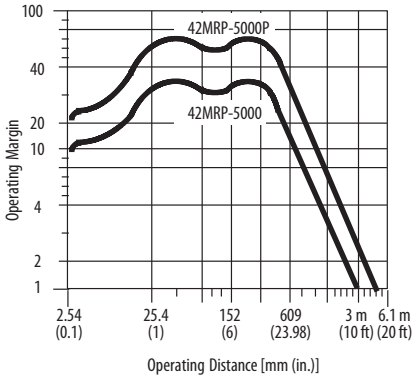

Transmitted Beam

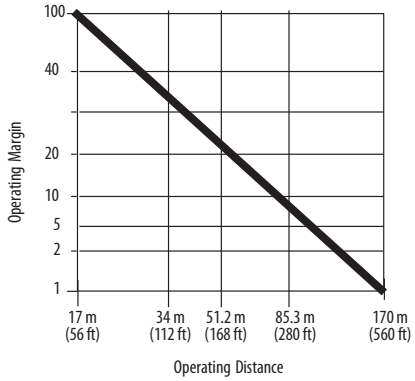

Infrared Glass Fiber Optic/Fixed Focus/Wide Angle Diffuse
Fixed Focus Lens

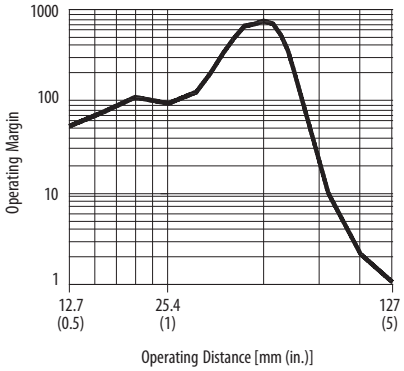

Wide Angle Lens — Infrared Emitter

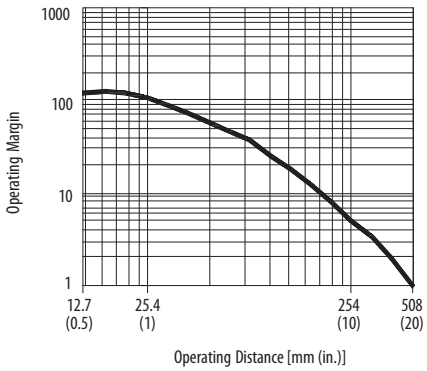

Visible Red Plastic Fiber Optic/Fixed Focus/Wide Angle Diffuse
Fixed Focus Lens

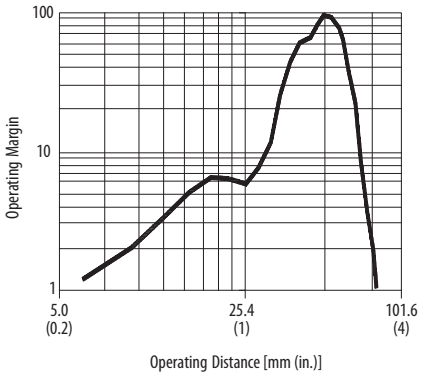

Wide Angle Lens — Visible Red

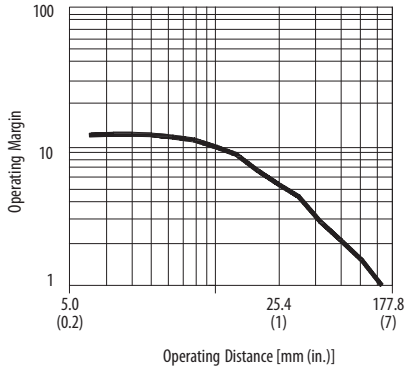

Terminal-style Power Base Dimensions [mm (in.)]

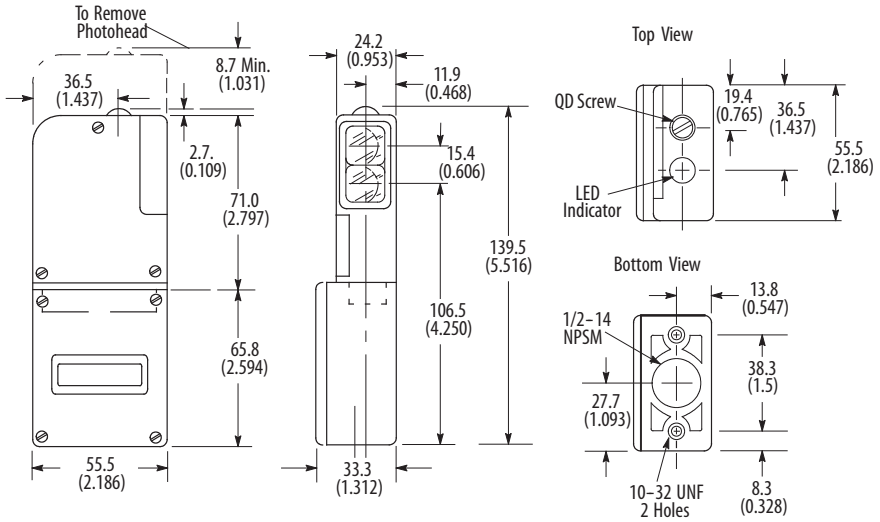

Cable-style Power Base Dimensions

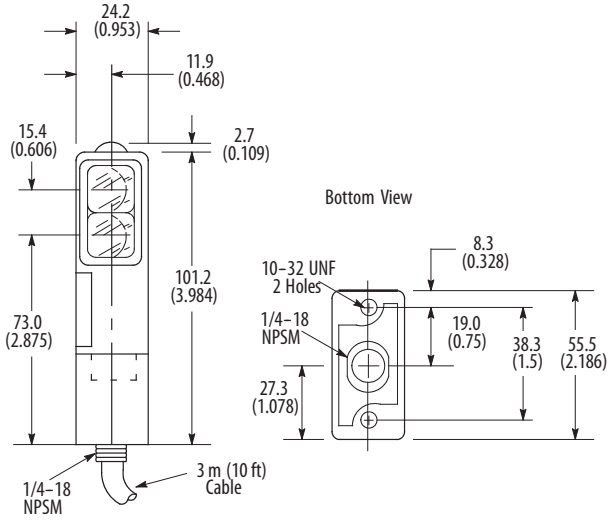

QD-style Power Base Dimensions [mm (in.)]

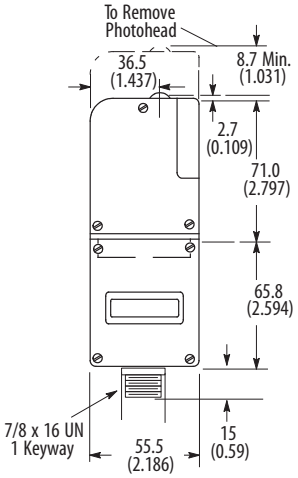

Lens Assembly Accessories

Cat. No.	Description
61–5550	Glass Fiber Optic
61–5551	Fixed Focus
61–5611	Wide Angle
61–6310	Plastic Fiber Optic

Right Angle Mirror Adapter Accessories [mm (in.)]

Right Angle Mirror Adaptor #60-1840

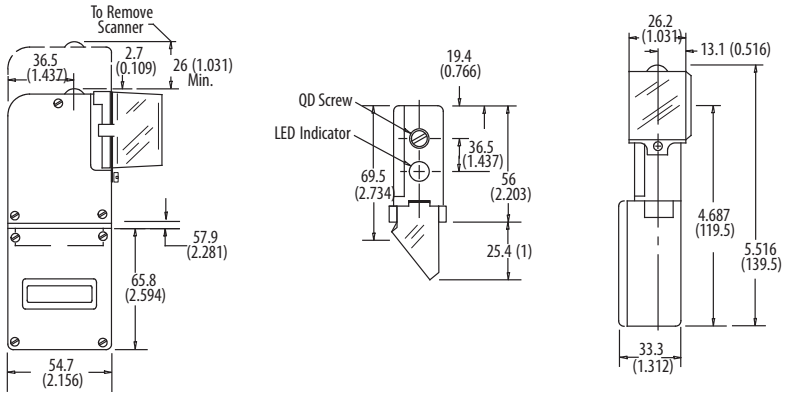

General-purpose Mounting Assembly

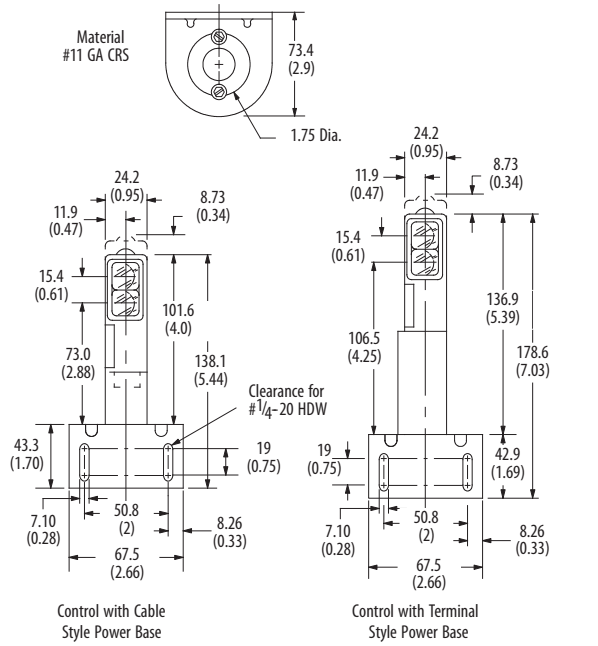

Heavy-duty Mounting Assembly [mm (in.)]

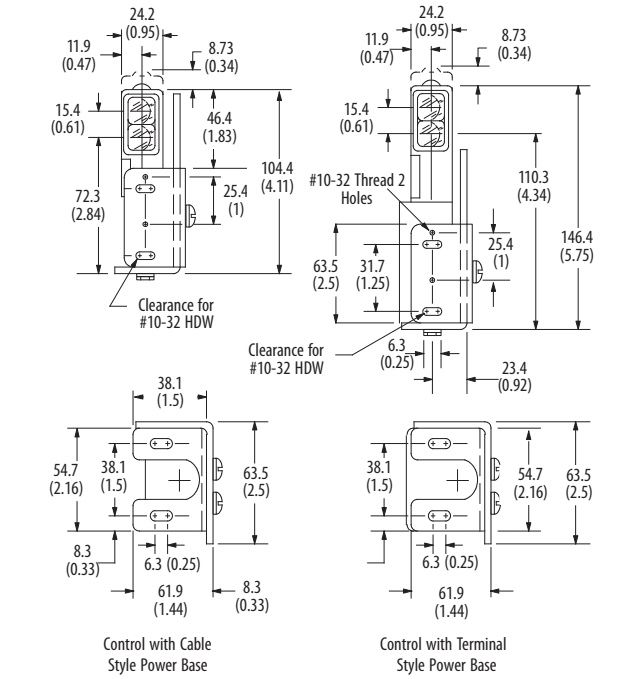

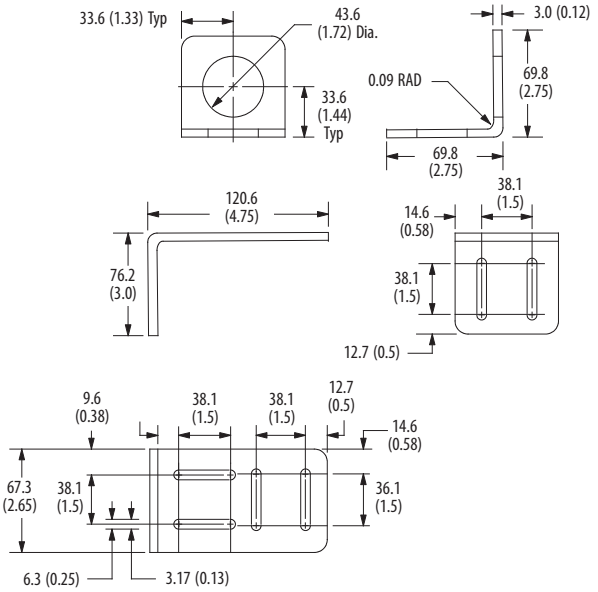

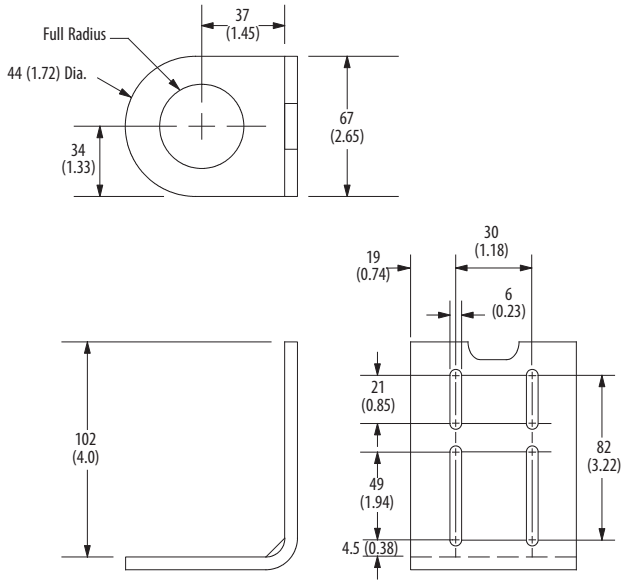

Notes:

Rockwell Automation Support

Use the following resources to access support information.

Technical Support Center	Knowledgebase Articles, How-to Videos, FAQs, Chat, User Forums, and Product Notification Updates.	https://rockwellautomation.custhelp.com/
Local Technical Support Phone Numbers	Locate the phone number for your country.	http://www.rockwellautomation.com/global/support/get-support-now.page
Direct Dial Codes	Find the Direct Dial Code for your product. Use the code to route your call directly to a technical support engineer.	http://www.rockwellautomation.com/global/support/direct-dial.page
Literature Library	Installation Instructions, Manuals, Brochures, and Technical Data.	http://www.rockwellautomation.com/global/literature-library/overview.page
Product Compatibility and Download Center (PCDC)	Get help determining how products interact, check features and capabilities, and find associated firmware.	http://www.rockwellautomation.com/global/support/pcdc.page

Documentation Feedback

Your comments will help us serve your documentation needs better. If you have any suggestions on how to improve this document, complete the How Are We Doing? form at http://literature.rockwellautomation.com/idc/groups/literature/documents/du/ra-du002_-en-e.pdf.

Waste Electrical and Electronic Equipment (WEEE)

At the end of life, this equipment should be collected separately from any unsorted municipal waste.

Rockwell Automation maintains current product environmental information on its website at http://www.rockwellautomation.com/rockwellautomation/about-us/sustainability-ethics/product-environmental-compliance.page.

Allen-Bradley, PHOTOSWITCH, Rockwell Automation, and Rockwell Software are trademarks of Rockwell Automation, Inc.
Trademarks not belonging to Rockwell Automation are property of their respective companies.

Rockwell Otomasyon Ticaret A.Ş., Kar Plaza İş Merkezi E Blok Kat:6 34752 İçerenköy, İstanbul, Tel: +90 (216) 5698400

www.rockwellautomation.com

Power, Control and Information Solutions Headquarters

Americas: Rockwell Automation, 1201 South Second Street, Milwaukee, WI 53204-2496 USA, Tel: (1) 414.382.2000, Fax: (1) 414.382.4444
Europe/Middle East/Africa: Rockwell Automation NV, Pegasus Park, De Kleetlaan 12a, 1831 Diegem, Belgium, Tel: (32) 2 663 0600, Fax: (32) 2 663 0640
Asia Pacific: Rockwell Automation, Level 14, Core F, Cyberport 3, 100 Cyberport Road, Hong Kong, Tel: (852) 2887 4788, Fax: (852) 2508 1846

Publication 5000-IN015B-EN-P - February 2018
Supersedes Publication 5000-IN015A-EN-P - February 1999

PN-474486
10003781274 Ver 00
Copyright © 2018 Rockwell Automation, Inc. All rights reserved. Printed in the U.S.A.