# 1771 Digital I/O
# Relay Contact Output Modules

**(Cat. Nos. 1771-OW, -OW16, -OWN, -OWNA, -OX, -OYL, -OZL)**

***Product Data***

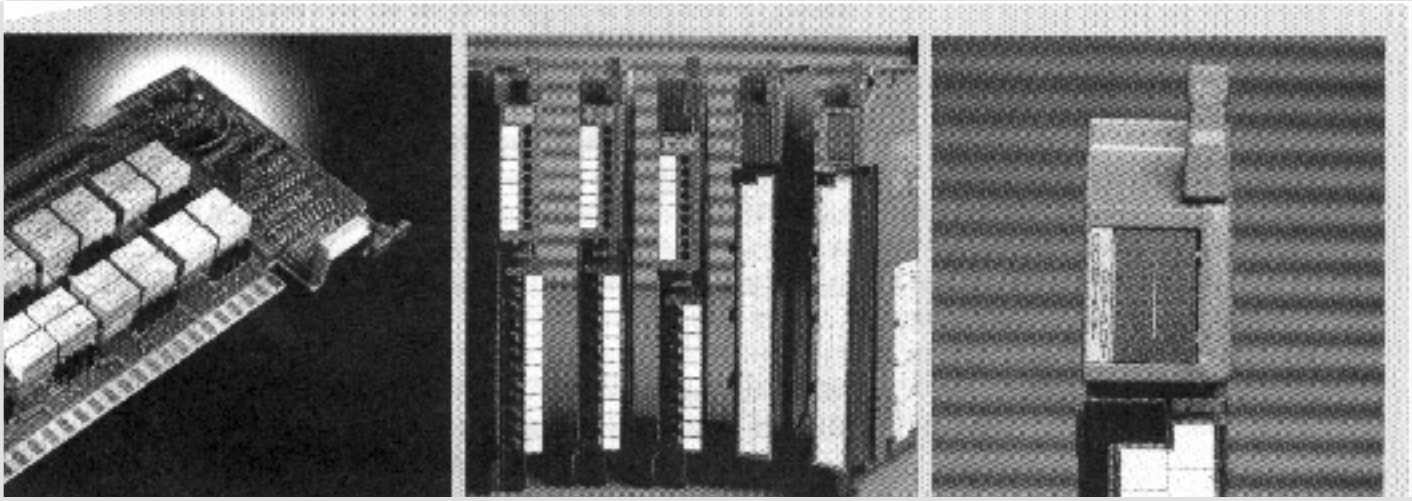

**Eliminate leakage current.** Relay contact output modules offer dry circuits, that is, circuits without leakage current. Leakage currents are present on solid-state outputs; these currents are capable of energizing highly sensitive output load devices such as low-power latching relays. Open contacts on output relays assure that no leakage currents occur in critical applications.

**Select the configuration mode for outputs.** Allen-Bradley relay contact output modules offer either normally-open (Form A) or normally-closed (Form B) configurations. You can select the form configuration for four of the contact output modules, the 1771-OW, -OW16, -OWN, and -OX. The 1771-OW has eight selectable outputs. The 1771-OW16 has eight normally-open and eight selectable outputs. The 1771-OWN has 32 selectable outputs.The 1771-OX has four selectable outputs. Selectable–configuration means you can predetermine whether an output will be on or off when local power is lost to the control system or the output module. The 1771-OWNA has 32 non-selectable normally-open contacts.

Rockwell Automation
Allen-Bradley

Publication 1771-2.181 – September 1997

## Benefits

**Provide output isolation.** Isolation helps assure that a failure on one output circuit does not pull down another output circuit, thus increasing overall system integrity. This isolation also protects the backplane logic from line transients on the output circuits.

**Increase flexibility in applied voltages.** You can apply either ac or dc voltages to relay contact output circuits. The range of these voltages can be broad (within the module's operating specifications) without impacting the module's performance.

**Sink or source power.** Contacts on relays permit dc outputs to be sinking or sourcing as required by the devices being controlled. Solid-state outputs require specific compatibility with the load device as to current sinking or sourcing.

**Switch analog signals through relays.** You can use analog module inputs for different devices by switching circuits through relays. Analog signals are typically low voltage (+10V dc) and low current (4-20 mA). Contact resistance can be critical, and should be accounted for in low-impedance circuits.

## Using This Publication

This publication provides you with information about Allen-Bradley's relay contact output modules. The publication is divided into two sections. The first section contains general information that pertains to all of the relay modules; the second section contains module-specific information. The following table lists the relay contact modules and the page number on which you can find information about each.

**Relay Contact Output Modules**

| For more information about this module: | Refer to page: |
|---|---|
| 1771-OW (8 outputs/selectable) | 15 |
| 1771-OW16 (8 fixed, 8 selectable) | 15 |
| 1771-OWN (32 outputs/selectable) | 17 |
| 1771-OWNA (32 outputs) | 19 |
| 1771-OX (4 outputs/power) | 21 |
| 1771-OYL (24V/8outputs) | 23 |
| 1771-OZL (24V/8outputs) | 25 |

Allen-Bradley relay contact output modules use one of the following relay types:

| Relay Type | Catalog Number |
|---|---|
| Electromechanical | 1771-OW<br>1771-OW16<br>1771-OWN<br>1771-OWNA |
| Dry-Reed | 1771-OYL, 1771-OYZ |
| Mercury-Wetted | 1771-OX |

## Electromechanical Relays

Electromechanical relays contain the most economical design for power applications. These modules typically can handle line surges and noise through closed contacts. Electromechanical relays are not recommended for low voltage/low current applications. Electromechanical relays are generally slower than dry-reed relays. They are not recommended for use in environments with contaminants such as acid, ammonia, nitrogen, or chlorine (noxious environments) because they are not hermetically sealed. Allen-Bradley modules that use electromechanical relays include the 1771-OW, 1771-OW16, 1771-OWN, and 1771-OWNA modules.

## Dry-Reed Relays

Dry-reed relays are noted for their speed. These relays are well-suited for low-voltage, low-power applications. They are hermetically sealed and thus offer protection in noxious environments. Dry reeds, however, cannot handle surge currents due to their low-voltage design. Allen-Bradley modules that use dry-reed relays are the 1771-OYL and 1771-OZL modules.

## Mercury-Wetted Relays

The mercury-wetted relay is a power version of the dry-reed switch. These relays feature long life and high contact reliability because the mercury re-coats the contacts on every operation. Mercury-wetted relays are also hermetically sealed and have no bounce on outputs and offer a clean switch. Of the three types of relays, mercury-wetted relays are the slowest (10 ms). ATTENTION: The 1771-OX module contains mercury-wetted relays. At the end of the equipment's life, it should be collected separately from any unsorted municipal waste.

## System Compatibility

The following table lists the Allen-Bradley relay contact output modules and shows compatibility and use of data table for each.

**System Compatibility and Use of Data Table**

| Module Cat No. | Module Series | Output Image Bits Used | Addressing | | | Compatible Chassis |
|---|---|---|---|---|---|---|
| | | | 2-slot | 1-slot | 1/2-slot | |
| 1771-OW | A | 8 | Y | Y | Y | A,B |
| 1771-OW16 | B | 16 | R | Y | Y | B |
| 1771-OWN | A | 32 | N | R | Y | B |
| 1771-OWNA | A | 32 | N | R | Y | B |
| 1771-OX | A | 8 (4 actual outputs) | Y | Y | Y | A,B |
| 1771-OYL | A | 8 | Y | Y | Y | A,B |
| 1771-OZL | A | 8 | Y | Y | Y | A,B |

A = Compatible with superseded chassis (1771-A1, -A2, -A4)
B= Compatible with current chassis (1771-A1B, -A2B, -A3B, -A3B1, -A4B, -AM1, -AM2)
Y = Compatible without restriction
N = Not compatible
R = Conditional module placement; you must use an input module and an output module in an odd/even pair of slots of the I/O chassis beginning with slot 0.

## Power Supply Requirements

Relay contact output modules receive power through the 1771 I/O chassis backplane from the chassis power supply. Refer to the module specifications on pages 11 through 24 for the current required from the power supply (in mA) to operate the module. You should total the current requirements for all the modules in the chassis to avoid overloading the power supply or the I/O chassis backplane.

## Keying

Plastic keying bands shipped with each I/O chassis let you configure your I/O slots to accept only one type of module. You can configure any backplane connector in an I/O chassis to receive your contact output module except for the leftmost connector, which is reserved for adapter or processor modules. Since mixed voltages are often used on relay modules, most of the contact output relay modules all have the same keying slots. Refer to the module specifications for specific keying positions.

## Status Indicators

Status indicators on the front of each module show the system logic side status of the output relays. Each module has one indicator per output. When the indicator is on, it means the output relay coil is energized; when the indicator is off, it means the output relay coil is not energized. You can quickly isolate many types of external hardware-related faults by comparing these indicators with their corresponding output devices, and the control program.

## Application Considerations

When using relay contact output modules, you must consider the following:

### Limited Life

Relays have a finite number of operations during their life. This varies depending on the current loads and voltages you apply relative to the relay's design specifications. A relay that is always operating at the same load conditions has a very predicatable life. A low power load delivers longer contact life when the minimum load conditions are met. Varying load conditions can drastically shorten contact life. Do not operate a contact at low current or voltage conditions after operating the same relay under high power conditions. Operate at low power first, then at high power.

Electromechanical relays typically have a longer life than dry-reed relays. When selecting a relay type, we recommend that you consider the number of operations expected over time and the load placed on the relay.

The switching frequency of a relay is limited by its mechanical characteristics. To obtain maximum relay life, do not exceed the maximum switching frequency of the module.

### Excitation, Contact Closure, Speed, and Bounce

All types of relay outputs have a specified time in which contact is made or broken (pull-in or drop-out times). Dry-reed relays are notably faster than electromechanical. Electromechanical and dry-reed relays have contact bounce. Mercury-wetted relays do not have bounce.

### Load Characteristics

All wiring between the module and the load creates a certain amount of capacitive loading for the relay contacts. This capacitance is discharged during contact closure. The resulting peak current flow causes additional wear of the contact. Avoid this effect by keeping your cable lengths as short as possible, and, if possible, insert a resistor in series with your load. Locate the resistor as near as possible to the field wiring arm. Size the resistor properly.

Many loads (relays, coils, motor starters, solenoids, motors, etc.) contain a certain amount of inductance. This inductance does not allow an instantaneous change of current when the relay contacts open. As a result, the voltage across the contacts rises to a very high level, and causes arcing between the contacts. This arcing reduces the life of the contacts.We recommend you use a resistor-capacitor (RC) network (also called a “snubber”) across the contacts in all circuits.

**ATTENTION:** Failure to use a resistor-capacitor (RC) network across the relay contacts can result in generation of electromagnetic noise which could disrupt nearby electrical equipment, including the 1771 I/O chassis.

The best location for the RC network is across the relay contact terminals on the field wiring arm. This location suppresses the noise where it is generated, and does not let the noise radiate along the wiring going to the load.

The 1771-OW, -OW16, -OWN, -OWNA, -OYL, and -OZL modules are not approved by UL/CSA for use with reactive loads. The 1771-OX module is designed with selectable dc surge protection circuitry.

The formula necessary to determine the appropriate values for the RC network is shown below. Use a capacitor with an ac voltage rating greater than the maximum voltage seen across the contacts. Use a 5%, 1 Watt carbon composition resistor.

**Resistor-Capacitor Network Calculation of Values**

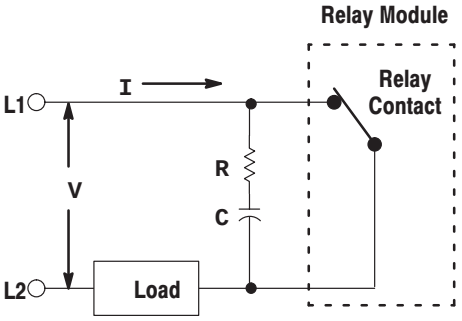


$C = I^2/10$ in $\mu F$

$R = V/(10I^a)$ in ohms

Where: I = Amps
V = Volts
a = 1 + (50/V)

Incandescent lamps also create a spike due to their low turn-on resistance before they become hot. Therefore, you must use derating or surge suppression (for example Allen-Bradley surge suppressors 1492-H2K120, 1492-H2K024, and 1492-H2K240). Specified relay current is typically derated at ten times the steady-state current of the incandescent lamp load. For derating, you can calculate cold-start load by measuring the cold load resistance. You can also experience large current surges when bulbs burn out (e.g. 20-50 amps).

### Environments

The operating temperature of the relay greatly influences the life of the relay contacts. The 1771 relay contact output modules have a maximum operating temperature of 60º. Operation at lower temperatures will extend relay contact life.

Since electromechanical relays are not hermetically sealed, they are not recommended in environments with contaminants such as acid, ammonia, nitrogen, and chlorine— especially with voltages under 24V ac/dc or for prolonged periods without operation. Such environments contaminate the relay contacts, causing reliability problems. Higher voltage usage, between 24 and 120V ac/dc, and continued operation help keep contacts clean as a result of the burning off of contact contaminants. Relays are also subject to reliability problems under high vibration environments as mechanical motion can intermittently break contacts.

Mercury-wetted relays and dry-reed relays are hermetically sealed from the environments, thus preventing environmental reliability problems. Mercury-wetted relays are generally sensitive to mounting position.

## Output Module Loading

The life of the relays in the output modules is directly affected by the load through the contacts and the operating temperature.

Minimum currents and voltages specified for 1771 relay contact output modules are selected to provide clean contacts throughout the life of the contacts. The relays can operate below the minimum specifications, but operation will not be reliable.

Exceeding the maximum power ratings for the module will shorten the life of the relay contacts. Do not operate relay contact output modules at power levels greater than maximum specifications.

By using the operating range graphs, you can determine if you are within the operating capability of the relay. You only need to know any two of the following:

- voltage
- load current (mA)
- load power consumption (W)

Using Figure 1, follow this example:

Given a 30V dc, 4W indicator, is this in operating range?

1. Locate the vertical line for 30V.
2. Locate the angled line for 4W; it is at this angle (\).
3. Find where the two lines cross. If this is within the shaded area of the graph, you are in the permissible operating area for the relay contact output module. (In this example, you are in the permissible operating range.)

Refer to the following operating range graphs to determine the operating capability of the relay.

**Figure 1**
**1771-OW, -OWN, -OWNA ac and dc Operating Load Range[1]**
**(Relay Contacts)**

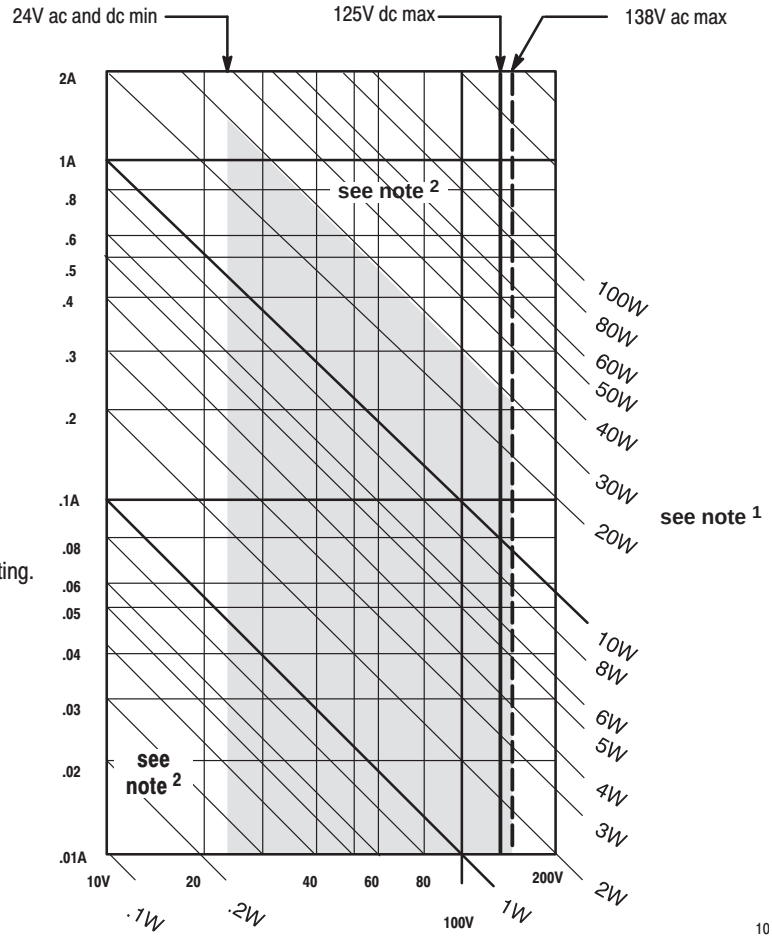


[1] Spikes, peaks and surges must be within the power rating. Resistive loads only. ac or dc power = 30W max.

[2] **CAUTION!** Do not operate in this area.

**Figure 2**
**1771-OW16 ac and dc Operating Load Range[1]**
**(Relay Contacts)**

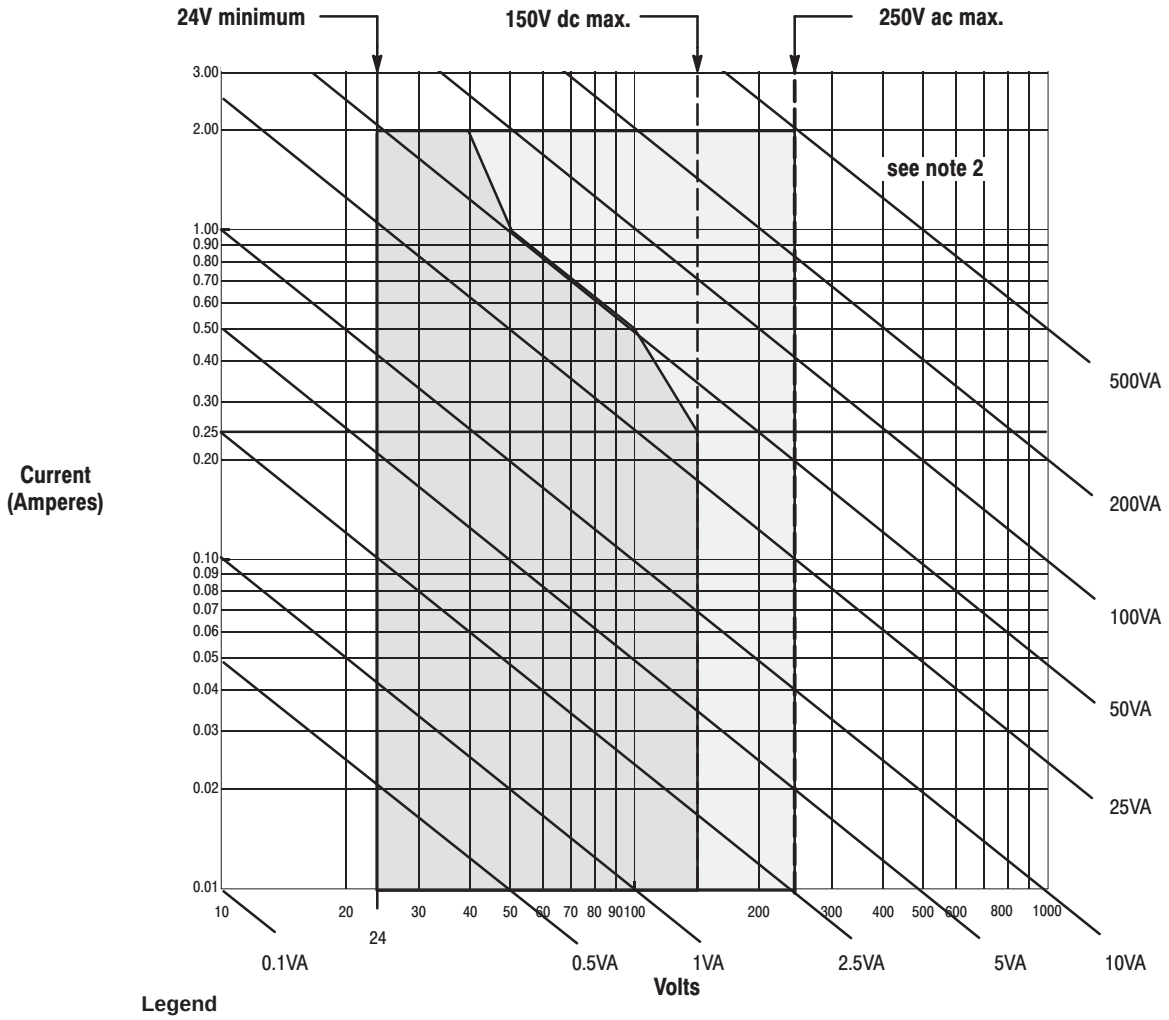


**Legend**

ac and dc

ac only

[1] Spikes, peaks and surges must be within the power rating.
Resistive, capacitive or inductive loads only.
ac power = 500VA max; dc power = 80W max.

[2] **CAUTION!** Do not operate in this area.

10507–I

**Figure 3**
**1771-OX ac and dc Operating Load Range[1]**
**(Relay Contacts)**

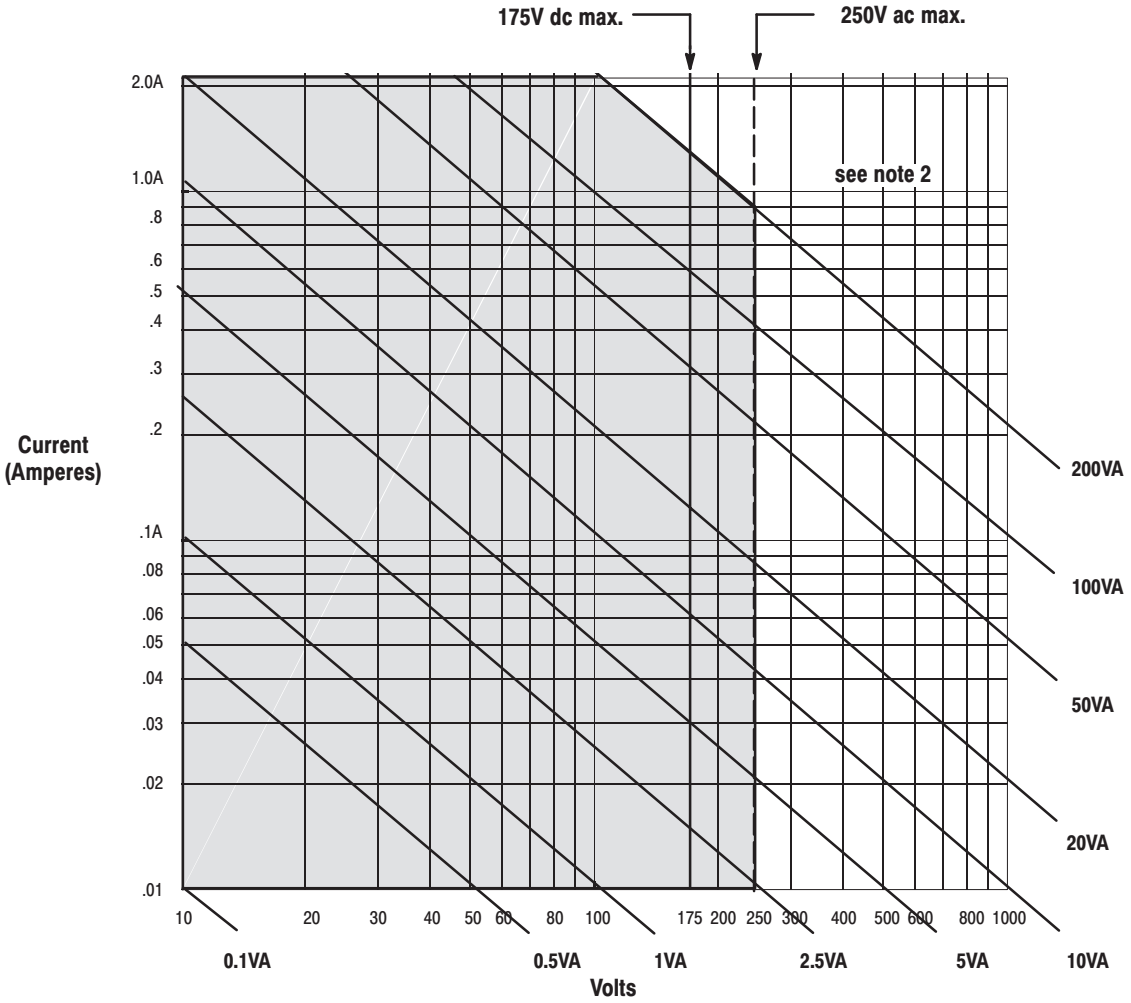


[1] Spikes, peaks and surges must be within the power rating.
Resistive or inductive loads only.
ac or dc power = 200VA max.

[2] **CAUTION!** Do not operate in this area.

10507–I

**Figure 4**
**1771-OYL, -OZL ac and dc Operating Load Range[1]**
**(Relay Contacts)**

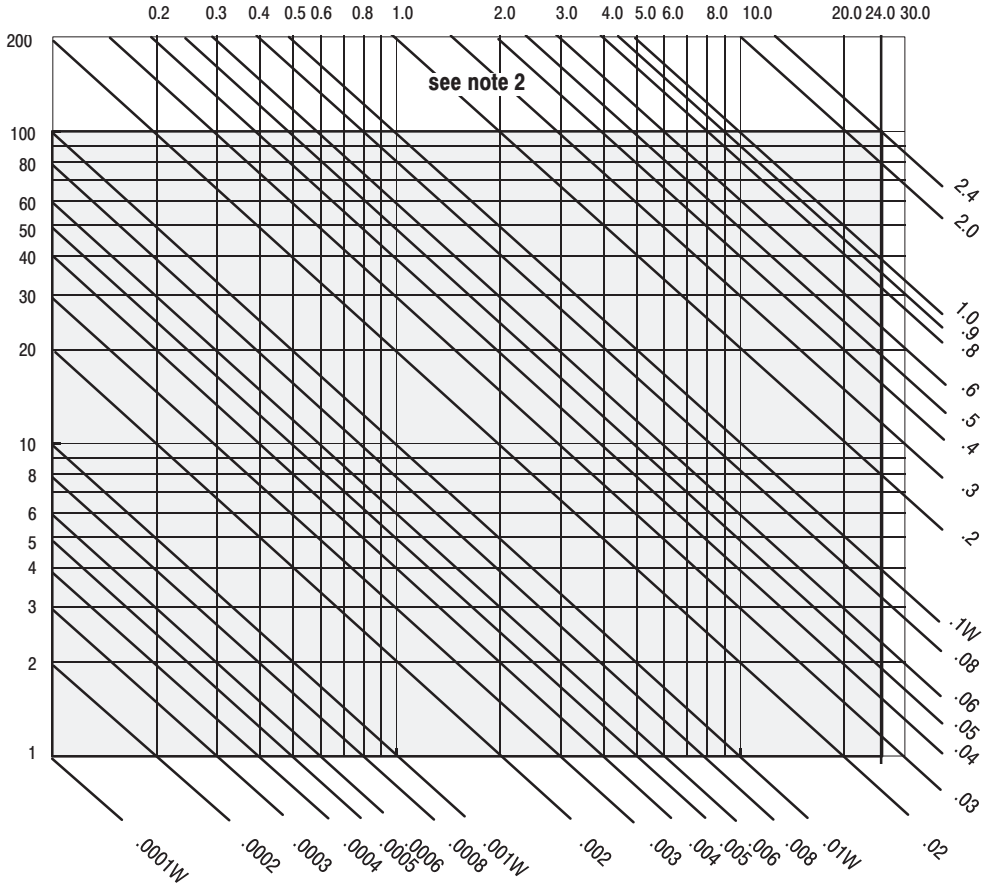


[1] Resistive loads only. ac or dc power = 2.4W max.

[2] **CAUTION!** Do not operate in this area.

## Compliance to European Union Directives

If this product has the CE mark it is approved for installation within the European Union and EEA regions. It has been designed and tested to meet the following directives.

### EMC Directive

This product is tested to meet Council Directive 89/336/EEC Electromagnetic Compatibility (EMC) and the following standards, in whole or in part, documented in a technical construction file:

- EN 50081-2EMC – Generic Emission Standard, Part 2 – Industrial Environment
- EN 50082-2EMC – Generic Immunity Standard, Part 2 – Industrial Environment

This product is intended for use in an industrial environment.

### Low Voltage Directive

This product is tested to meet Council Directive 73/23/EEC Low Voltage, by applying the safety requirements of EN 61131–2 Programmable Controllers, Part 2 – Equipment Requirements and Tests.

For specific information required by EN 61131-2, see the appropriate sections in this publication, as well as the following Allen-Bradley publications:

- Industrial Automation Wiring and Grounding Guidelines For Noise Immunity, publication 1770-4.1
- Guidelines for Handling Lithium Batteries, publication AG-5.4
- Automation Systems Catalog, publication B111

## Agency Certification

Individual discrete I/O modules can also comply with various other agency requirements when product or packaging is so marked.

| | |
|---|---|
| Agency Certification (when product or packaging is marked) | • CSA certified<br>• CSA Class I, Division 2, Groups A, B, C, D certified<br>• UL listed<br>• CE marked for all applicable directives |

## Module Information

Refer to the following pages for detailed information about each Allen-Bradley relay contact output module. This information includes:

- simplified schematic
- application notes
- connection diagram
- driving an input module with an output module
- switch and jumper settings
- specifications

| For more information about this module: | Refer to page: |
|---|---|
| 1771-OW (8 outputs/selectable) | 15 |
| 1771-OW16 (8 fixed, 8 selectable) | 15 |
| 1771-OWN (32 outputs/selectable) | 17 |
| 1771-OWNA (32 outputs) | 19 |
| 1771-OX (4 outputs/power) | 21 |
| 1771-OYL (24V/8outputs) | 23 |
| 1771-OZL (24V/8outputs) | 25 |

# Selectable Relay Contact Output Module (Cat. No. 1771-OW)

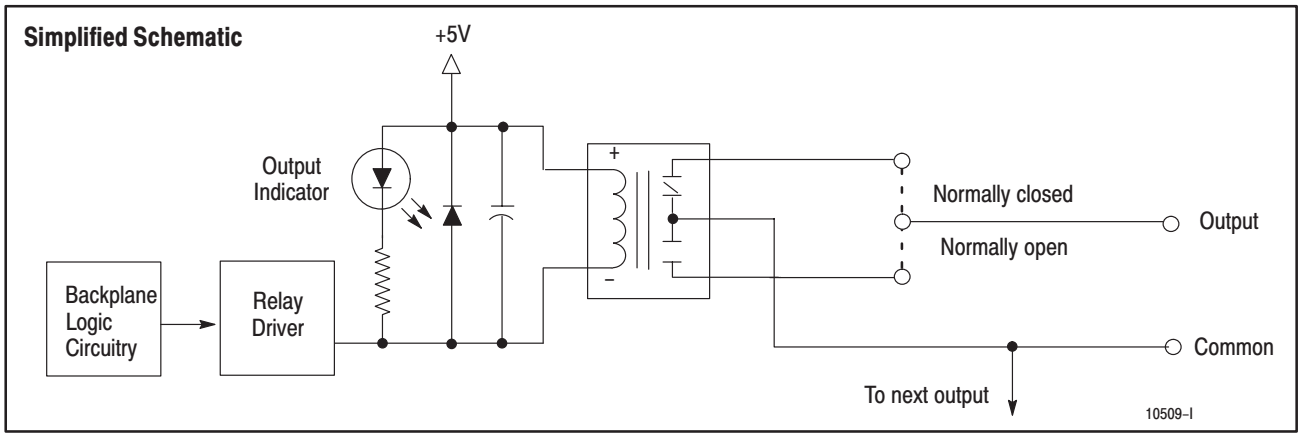


## Application Notes

**Load Type.** 1771-OW modules do not contain surge limiting circuitry. Use these modules for switching resistive loads only (e.g., lamps, indicators, heating elements). They are not recommended for inductive or capacitive loads (e.g., motor starters, solenoids, relays).

**Isolation.** Outputs on the 1771-OW module are arranged in 4 groups of 2, each group with its own common. Each output is electrically isolated from module logic circuitry. The module can simultaneously switch all 8 outputs to separate loads, each conducting a maximum load of 1.0A continuously, at rated power. AC loads switched by the modules should have a power factor of 1.0.

**Connection to Input Modules.** You can use the 1771-OW module to drive an input of the following ac modules: 1771-IA, -IA2, -IAD, -IAN, -ID, -ID16, -IN, -IND. The 1771-OW module can drive an input of the following dc modules at nominal voltage: 1771-IB, -IBD, -IBN, -IH, -IQ, -IQ16, -IT, -IV, and -IVN. For reliable operation, a load current of at least 10mA should be maintained.

**No Increase from Parallel Operation**. Do not attempt to increase load current or wattage capability beyond the rating by connecting two or more outputs in parallel. The slightest variation in output relay switching time may cause one set of the contacts to switch the total load current.

**Configuring Output Selection.** When the output image table bit at the address corresponding to any output is energized (set to 1), the corresponding relay contact is closed or opened, respective to the jumper setting.

All outputs are individually selectable for either normally-open or normally-closed operation. They are preset for normally-open operation at the factory. See next page for relay output jumper setting.

## Connection Diagram

(internal circuits on left; external circuits on right.)

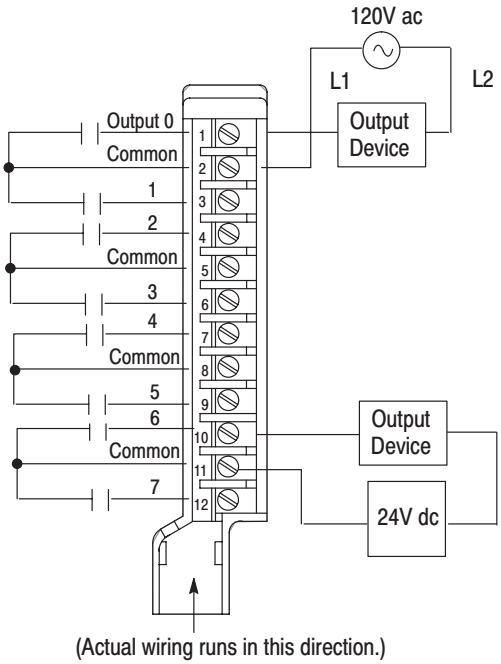


Note: Contacts are shown in N.O. configuration for simplicity. Placement of each relay's jumper sets N.O. or N.C. operation.

10510–I

| Specifications (Cat. No. 1771-OW) | |
|---|---|
| Outputs per Module | 8 (4 groups of 2) |
| Module Location | 1771 I/O chassis |
| Voltage Rating | 24 – 138V ac rms<br>24 – 125V dc |
| Current Rating[1] | 1A per output (maximum) |
| Surge Current | 1A maximum per output (at rated power)[2] |
| Power Rating | dc: 30W per output (resistive)<br>ac (suppressed)[2]: 30W per output (resistive) |
| Minimum Contact Load | dc: 10mA @ 24V<br>ac: 10mA @ 24V |
| Operate/Release Time | 5ms(±1ms) typical |
| Bounce Time | 1ms maximum |
| Switching Frequency | 10Hz maximum |
| Power Dissipation | 3.7 Watts (max.); 3.3 Watts (min.) |
| Thermal Dissipation | 12.6 BTU/hr (max.); 11.3 BTU/hr (min.) |
| Backplane Current | 700mA maximum |
| Isolation Voltage | 1000V between open contacts<br>1500V between coil and contact |
| Conductors Wire Size<br>Category | 14 gauge (2mm$^2$) stranded maximum<br>3/64 inch (1.2mm) insulation maximum<br>1[3] |
| Environmental Conditions<br>Operating Temperature<br>Storage Temperature<br>Relative Humidity | <br>0 to 60ºC (32 to 140ºF)<br>–40 to 85ºC (–40 to 185ºF)<br>5 to 95% (without condensation) |
| Keying | Between 6 and 8<br>Between 16 and 18 |
| Field Wiring Arm | 1771-WD |
| Wiring Arm Screw Torque | 7-9 inch-pounds |
| Agency Certification (when product or packaging is marked) | • CSA certified<br>• CSA Class I, Division 2, Groups A, B, C, D certified<br>• UL listed<br>• CE marked for all applicable directives |
| Installation Data | 1771-2.110 |

1 Spikes peaks and surges must be within the power rating. Resistive loads only. ac or dc power = 30W max.
2 Surge limiting circuitry is not provided in the module. For reliable operation, the user must ensure that surges do not exceed either the voltage or current rating of the module.
3 You use this conductor category information for planning conductor routing as described in the system level installation manual.

| Output | Jumper | Output | Jumper |
|---|---|---|---|
| 0 | K1 | 4 | K5 |
| 1 | K2 | 5 | K6 |
| 2 | K3 | 6 | K7 |
| 3 | K4 | 7 | K8 |

**Sample Connection Diagram for the 1771-OW Module Driving a 120V ac Input Module**

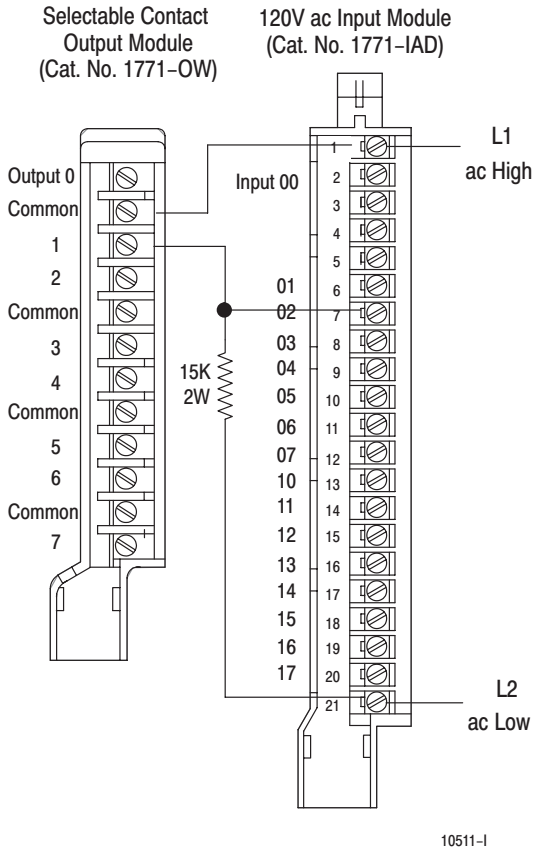


**Relay Output Jumper Setting**

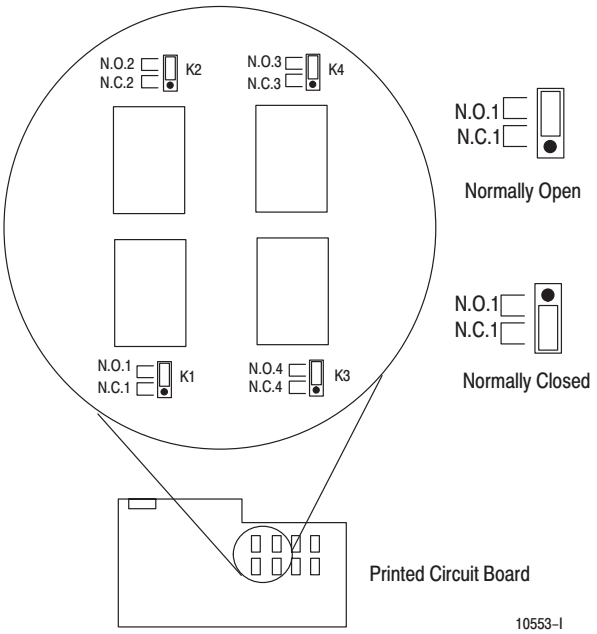

# Selectable Relay Contact Output Module (Cat. No. 1771-OW16 Series B)

**Simplified Schematic**

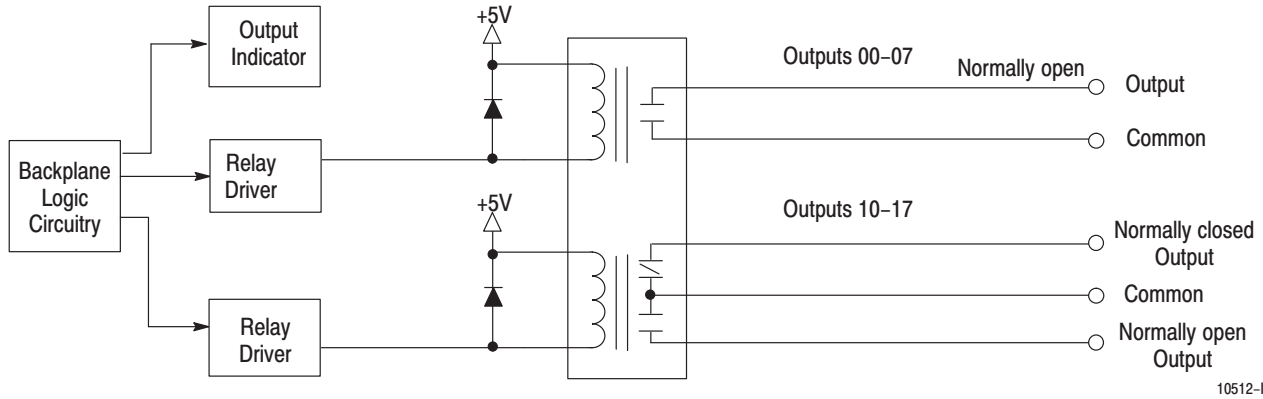


## Application Notes

**Load Type.** 1771-OW16 modules do not contain surge limiting circuitry. With properly chosen surge limiting devices, this module can be used to switch resistive (e.g., lamps, indicators, heating elements), capacitive and inductive loads (e.g., motor starters, solenoids, relays). When driving inductive or high current loads, a resistor-capacitor network should be placed across the module's relay contacts at the field wiring arm. This will help reduce the generation of electromagnetic noise created by the contacts when changing state.

**Isolation**. Outputs on the 1771-OW16 module are arranged in 2 groups of 8. Each output has a separate common and is electrically isolated from module logic circuitry. The first group of outputs are arranged as normally-open contacts. The second group of outputs are selectable normally-open or normally-closed. The module can simultaneously switch all 16 outputs to separate loads. Each output can conduct a maximum load of 2.0A continuously at 500VA for ac loads, and 80W maximum for dc loads, but the total output power of the module cannot exceed 1440VA or 1280W.

**Connection to Input Modules.** You can use the 1771-OW16 module to drive an input of the following ac modules: 1771-IA, -IA2, -IAD, -IAN, -ID, -ID16, -IN, -IND. The 1771-OW16 module can drive an input of the following dc modules at nominal voltage: 1771-IB, -IBD, -IBN, -IH, -IQ, -IQ16, -IT, -IV, and -IVN. For reliable operation, a load current of at least 10mA should be maintained.

**No Increase from Parallel Operation**. Do not attempt to increase load current or wattage capability beyond the rating by connecting two or more outputs in parallel. The slightest variation in output relay switching time may cause one set of the contacts to switch the total load current.

**Configuring Output Selection.** When the output image table bit at the address corresponding to any output is energized (set to 1), the corresponding relay contact is closed or opened, respective to the jumper setting.

**Connection Diagram (showing internal circuits only)**

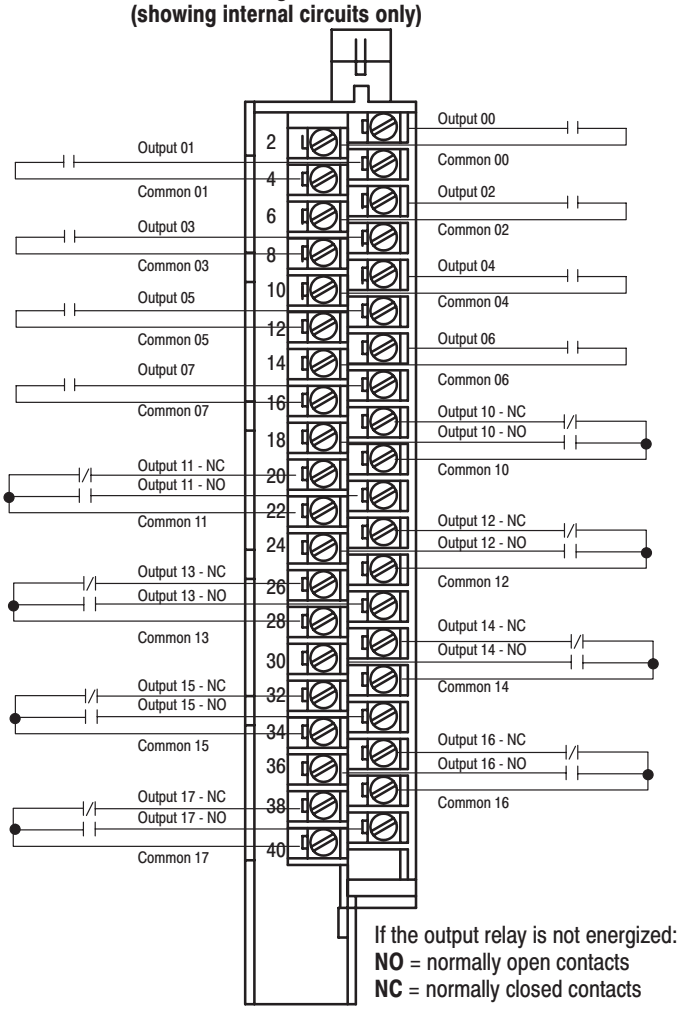

| Specifications (Cat. No. 1771-OW16 Series B) | |
|---|---|
| Outputs per module | 16 |
| Module Location | 1771-A1B thru -A4B I/O Chassis; 1771-AM1 or -AM2 |
| Voltage Rating | 24-250V ac (rms), 47-63Hz; 24-150V dc |
| Power Rating[1] | dc: 80 Watts per output (max); 1280 Watts per module (max.)<br>ac: 500 VA per output (max); 1440 VA per module (max.)<br>**cos $\Phi \geqslant$ 0.4** |
| Current Rating (maximum per channel)[2] | ac: 2A per output at rated power<br>dc: 2A per output up to 40V; 1A per output at 50V<br>0.5A per output at 100V; 0.25A per output at 150V |
| Maximum Surge Current | dc: 2A maximum per output (at rated power);<br>ac: Refer to Table A below |
| Minimum Contact Load | 10mA |
| Operate/Release Time | 10ms maximum; 5ms ($\pm$1ms) typical |
| Bounce Time Maximum | 4ms |
| Switching Frequency Maximum | 1/3Hz @ maximum load |
| Expected Life of Electrical Contacts | 300K operations @ 25ºC (**cos $\Phi$ = 1)** |
| Power Dissipation | All relays off: 0.015 Watts; All relays on: 6.55 Watts |
| Thermal Dissipation | All relays off: 0.05 BTU/hr; All relays on: 22.24 BTU/hr |
| Backplane Current | 1.3A maximum |
| Maximum Cable Length | 1000ft (304.8m) |
| Isolation Voltage | 1500V ac for 1 second customer side to system side;<br>1500V ac for 1 second channel to channel;<br>relay rated 4000V coil to contact |
| Conductors Wire Size<br>Category | 14 gauge (2mm$^2$) stranded maximum[3]<br>3/64 inch (1.2mm) insulation maximum<br>1[4] |
| Environmental Conditions<br>Operational Temp.<br>Storage Temperature<br>Relative Humidity | <br>0º to 60ºC (32º to 140ºF)<br>-40º to 85ºC (-40º to 185ºF)<br>5 to 95% (without condensation) |
| Keying | Between 2 and 4<br>Between 32 and 34 |
| Field Wiring Arm | Catalog Number 1771-WN |
| Wiring Arm Screw Torque | 7-9 inch-pounds |
| Agency Certification (when product or packaging is marked) | • CSA certified<br>• CSA Class I, Division 2, Groups A, B, C, D certified<br>• UL listed<br>• CE marked for all applicable directives |
| Installation Data | 1771-2.206 |

1 An individual output should not be subjected to high power loads and then be required to run low power loads.
2 Output current maximum per module is limited by the maximum output power rating.
3 14 gauge wire connected to all terminals may not allow the field wiring arm cover to close. A smaller wire size may be required.
4 You use this conductor category information for planning conductor routing as described in the system-level installation manual.

**Table A**
**Maximum ac Surge Current**

| Maximum Contact Rating | | | | | |
|---|---|---|---|---|---|
| ac Voltage | Amperes | | Continuous Carrying Current | Maximum VoltAmperes | |
| | Make | Break | | Make | Break |
| 120 | 30 | 3 | 2 | 3600 | 360 |
| 240 | 15 | 1.5 | 2 | 3600 | 360 |

**Sample Connection Diagram for the 1771-OW16 Module Driving a 120V ac Input Module**

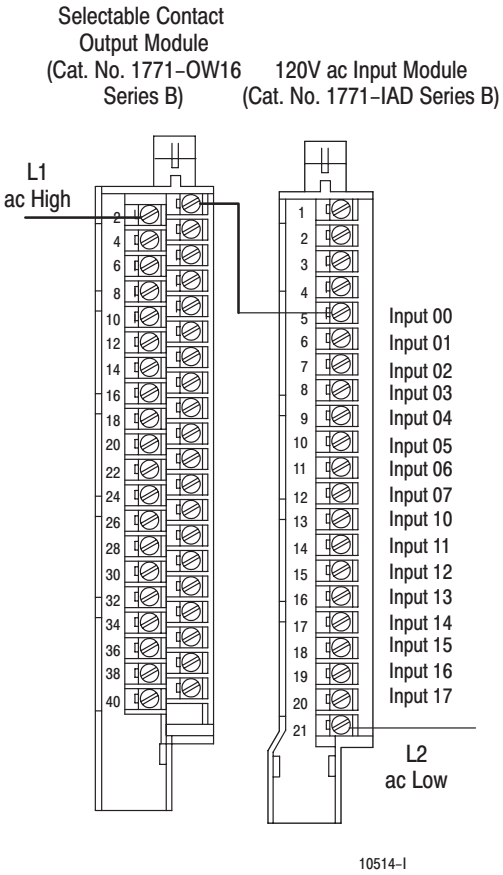

# Selectable Relay Contact Output Module (Cat. No. 1771-OWN)

**Simplified Schematic**

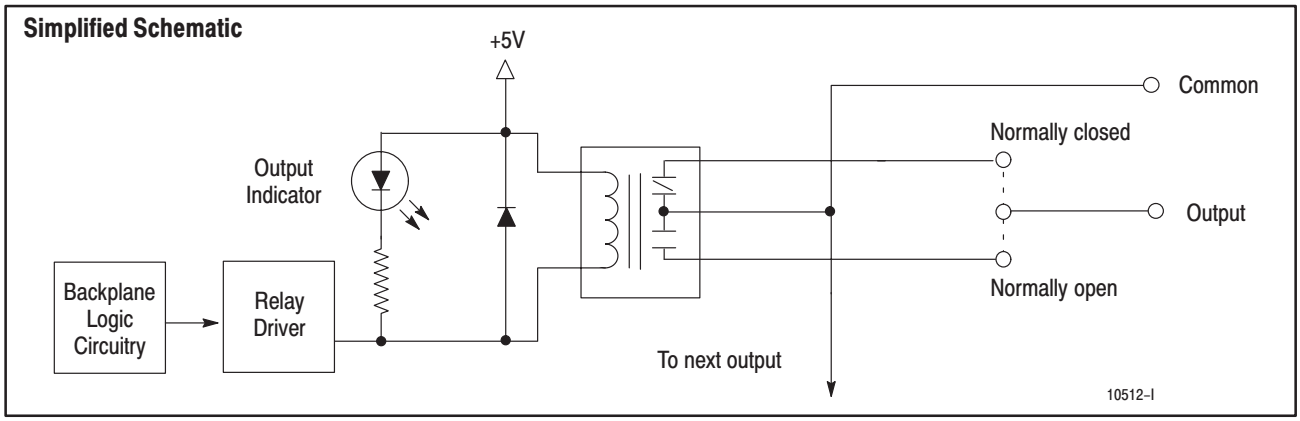


## Application Notes

**Load Type.** 1771-OWN modules do not contain surge limiting circuitry. Use these modules for switching resistive loads only (e.g., lamps, indicators, heating elements). They are not recommended for inductive or capacitive loads (e.g., motor starters, solenoids, relays).

**Isolation**. Outputs on the 1771-OWN module are arranged in 4 groups of 8, each group with its own common. Each output is electrically isolated from module logic circuitry. The module can simultaneously switch all 32 outputs to separate loads, with a maximum of 12A per module. Each output can conduct a maximum load of 1.0A continuously at 30W maximum. AC loads switched by the modules should have a power factor of 1.0.

**Connection to Input Modules.** You can use the 1771-OWN module to drive an input of the following ac modules: 1771-IA, -IA2, -IAD, -IAN, -ID, -ID16, -IN, -IND. The 1771-OWN module can drive an input of the following dc modules at nominal voltage: 1771-IB, -IBD, -IBN, -IH, -IQ, -IQ16, -IT, -IV, and -IVN. For reliable operation, a load current of at least 10mA should be maintained.

**No Increase from Parallel Operation**. Do not attempt to increase load current or wattage capability beyond the rating by connecting two or more outputs in parallel. The slightest variation in output relay switching time may cause one set of the contacts to switch the total load current.

**Configuring Output Selection.** When the output image table bit at the address corresponding to any output is energized (set to 1), the corresponding relay contact is closed or opened, respective to the jumper setting.

All outputs are individually selectable for either normally-open or normally-closed operation. They are preset for normally-open operation at the factory. See next page for relay output jumper settings.

**Connection Diagram (showing internal circuits only)**

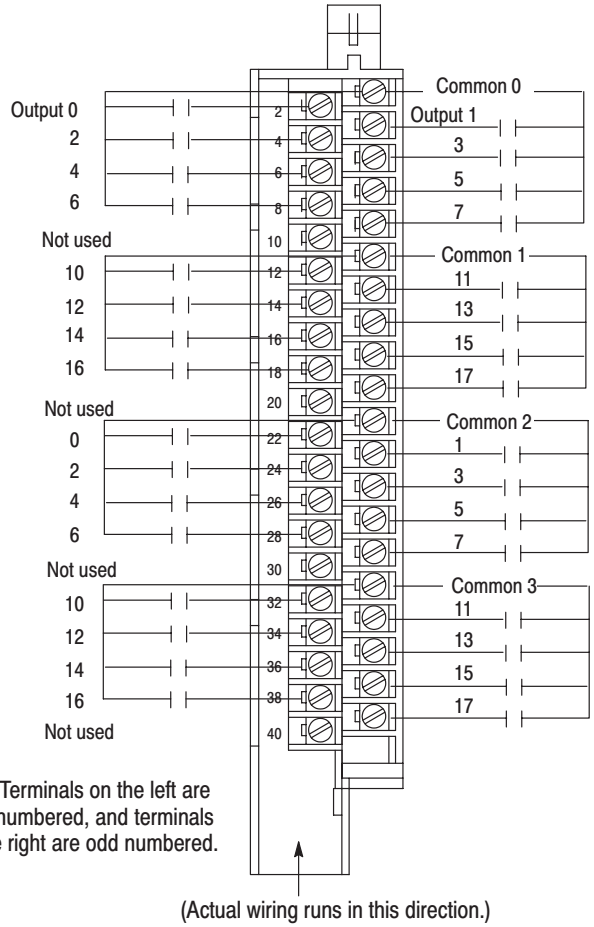


Note: Terminals on the left are even numbered, and terminals on the right are odd numbered.

Note: Contacts shown in N.O. configuration for simplicity.

10513–I

## Specifications (Cat. No. 1771-OWN)

| | |
|---|---|
| Outputs per module | 32 (4 groups of 8) |
| Module Location | 1771–A1B thru –A4B, 1771-AM1, -AM2 Chassis |
| Voltage Rating | 24 – 138V ac rms; 24 – 125V dc |
| Current Rating[1]<br>Max. per output<br>Max. per module<br>Max. per group | <br>1A derate linearly .033A/°C above 45°C<br>12A derate linearly .4A/°C above 45°C<br>4A derate linearly .133A/°C above 45°C |
| Surge Current | 1A (max) per output (at rated power)[2] |
| Power Rating | dc: 30W per output (resistive) maximum<br>ac: 30W per output (resistive) maximum |
| Minimum Contact Load | 10mA |
| Operate/Release Time | 5ms (±1ms) typical |
| Bounce Time | 1ms (max) |
| Switching Frequency | 10Hz (max) |
| Power Dissipation | All relays off: 15mW;<br>All relays on: 12.5W (max.) |
| Thermal Dissipation | All relays off: 0.05 BTU/hr;<br>All relays on: 42.75 BTU/hr (max.) |
| Backplane Current | 2.5A maximum; 1.8A nominal |
| Isolation Voltage | 1000V between open contacts<br>1500V between coil and contact |
| Interconnect Cable Length | 1000 ft. (304.8 meters) max |
| Conductors Wire Size<br>Category | 14 gauge (2mm$^2$) stranded (max)<br>3/64 inch (1.2mm) insulation (max)<br>1[3] |
| Environmental Conditions<br>Operational Temp.<br>Storage Temperature<br>Relative Humidity | <br>0 to 60°C (32 to 140°F)<br>–40 to 85°C (–40 to 185°F)<br>5 to 95% (without condensation) |
| Keying | Between 6 and 8<br>Between 16 and 18 |
| Field Wiring Arm | 1771-WN |
| Wiring Arm Screw Torque | 7-9 inch-pounds |
| Agency Certification (when product or packaging is marked) | • CSA certified<br>• CSA Class I, Division 2, Groups A, B, C, D certified<br>• UL listed<br>• CE marked for all applicable directives |
| Installation Data | 1771-5.37 |

[1] Spikes peaks and surges must be within the power rating. Resistive loads only. ac or dc power = 30W max.
[2] Surge limiting circuitry is not provided in the module. For reliable operation, the user must ensure that surges do not exceed either the voltage or current rating of the module.
[3] You use this conductor category information for planning conductor routing as described in the system level installation manual.

| Output | Jumper No. |
|---|---|
| Outputs 00 – 07 | L–00 – L–07 |
| Outputs 10 – 17 | L–10 – L–17 |
| Outputs 20 – 27 | H–00 – H–07 |
| Outputs 30 – 37 | H–10 – H–17 |

### Sample Connection Diagram for the 1771-OWN Module Driving a 120V ac Input Module

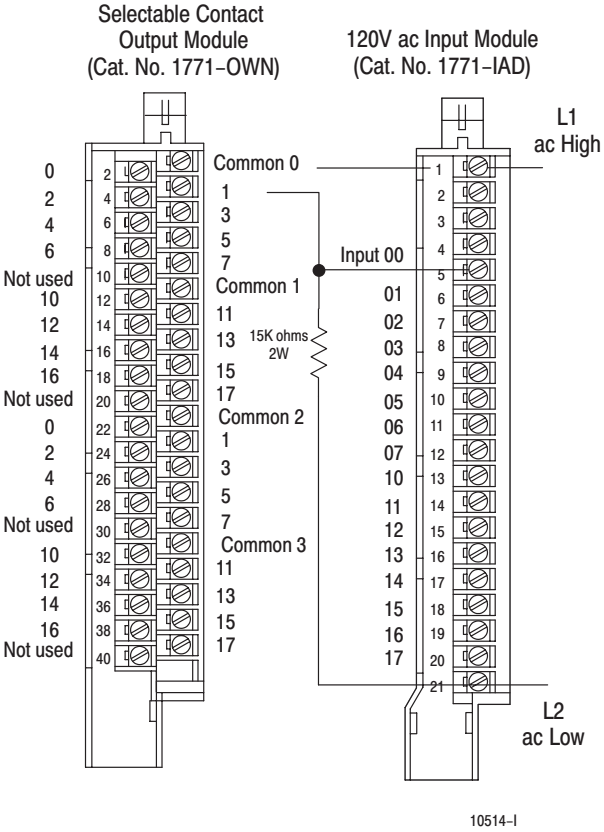


### Relay Output Jumper Setting

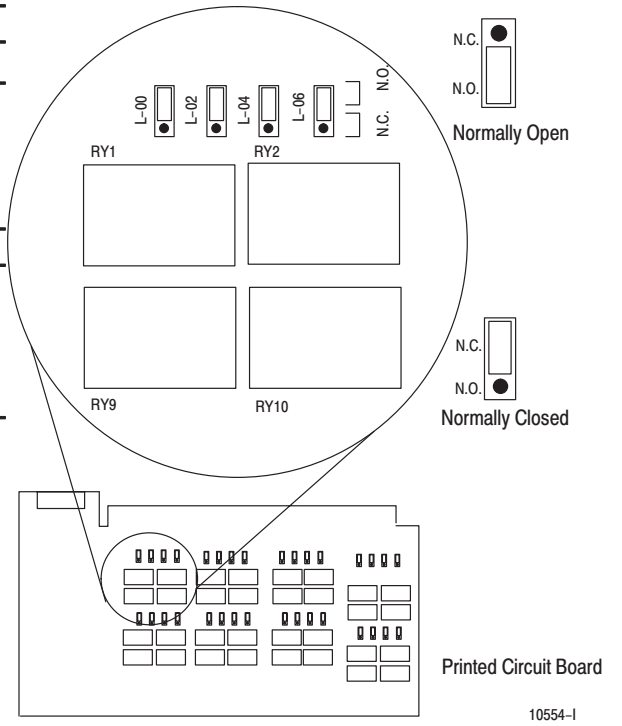

# Relay Contact Output Module (Cat. No. 1771-OWNA)

**Simplified Schematic**

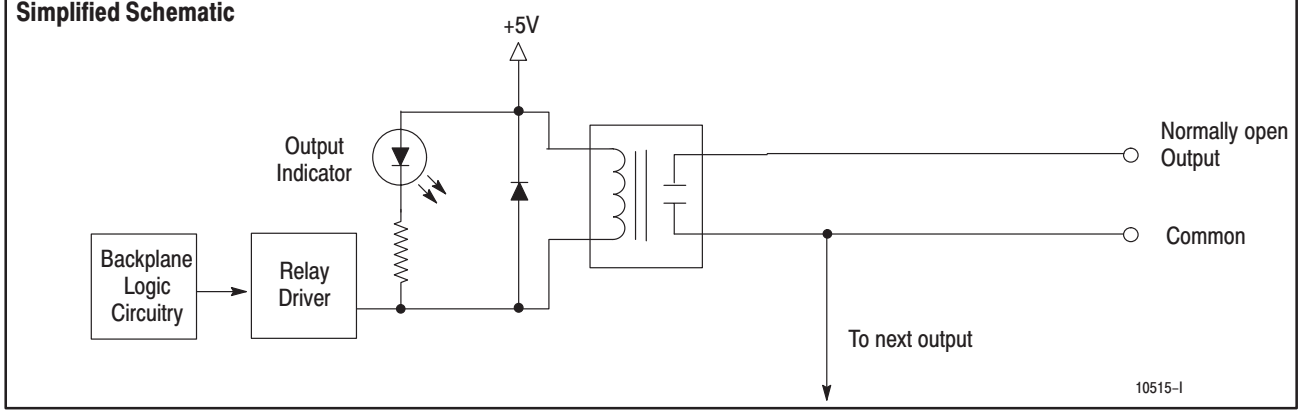


## Application Notes

**Load Type.** 1771-OWNA modules do not contain surge limiting circuitry. Use these modules for switching resistive loads only (e.g., lamps, indicators, heating elements). They are not recommended for inductive or capacitive loads (e.g., motor starters, solenoids, relays).

**Isolation.** Outputs on the 1771-OWNA module are arranged in 4 groups of 8, each group with its own common. The module can simultaneously switch all 32 outputs to separate loads, with a maximum of 12A per module. Each output can conduct a maximum load of 1.0A continuously at 30W maximum. AC loads switched by the modules should have a power factor of 1.0.

**Connection to Input Modules.** You can use the 1771-OWNA module to drive an input of the following ac modules: 1771-IA, -IA2, -IAD, -IAN, -ID, -ID16, -IN, -IND. The 1771-OWNA module can drive an input of the following dc modules at nominal voltage: 1771-IB, -IBD, -IBN, -IH, -IQ, -IQ16, -IT, -IV, and -IVN. For reliable operation, a load current of at least 10mA should be maintained.

**No Increase from Parallel Operation**. Do not attempt to increase load current or wattage capability beyond the rating by connecting two or more outputs in parallel. The slightest variation in output relay switching time may cause one set of the contacts to switch the total load current.

**Connection Diagram**
(showing internal circuits only)

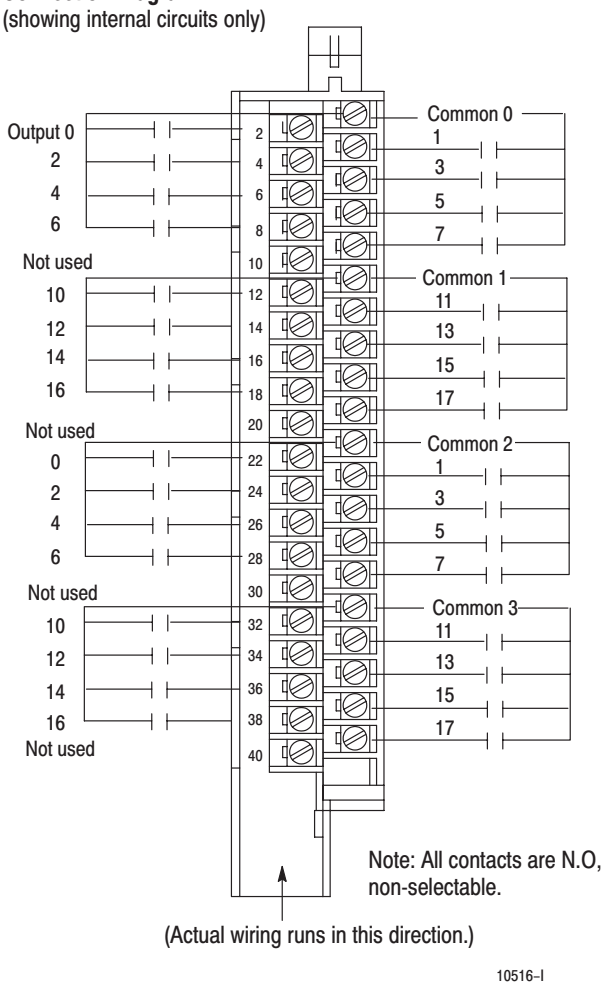

## Specifications (Cat. No. 1771-OWNA)

| | |
|---|---|
| Outputs per module | 32 (4 groups of 8) |
| Module Location | 1771–A1B thru –A4B, and 1771-AM1, -AM2 I/O Chassis |
| Voltage Rating | 24 – 138V ac rms<br>24 – 125V dc |
| Current Rating[1]<br>Max. per output<br>Max. per module<br>Max. per group | <br>1A derate linearly .033A/°C above 45°C<br>12A derate linearly .4A/°C above 45°C<br>4A derate linearly .133A/°C above 45°C |
| Surge Current | 1A (max) per output (at rated power)[2] |
| Power Rating | dc: 30W per output (resistive) maximum<br>ac: 30W per output (resistive) maximum |
| Minimum Contact Load | 10mA |
| Operate/Release Time | 5ms (±1ms) typical |
| Bounce Time | 1ms (max) |
| Switching Frequency | 10Hz (max) |
| Power Dissipation | All relays OFF: 15mW;<br>All relays ON: 12.5W (max.) |
| Thermal Dissipation | All relays OFF: 0.05 BTU/hr;<br>All relays ON: 42.75 BTU/hr (max.) |
| Backplane Current | 2.5A maximum; 1.8A nominal |
| Isolation Voltage | 1000V between open contacts<br>1500V between coil and contact |
| Interconnect Cable Length | 1000 ft. (304.8 meters) max |
| Conductors<br>Wire Size<br><br>Category | <br>14 gauge (2mm$^2$) stranded (max)<br>3/64 inch (1.2mm) insulation (max)<br>1[3] |
| Environmental Conditions<br>Operating Temperature<br>Storage Temperature<br>Relative Humidity | <br>0 to 60°C (32 to 140°F)<br>–40 to 85°C (–40 to 185°F)<br>5 to 95% (without condensation) |
| Keying | Between 6 and 8<br>Between 16 and 18 |
| Field Wiring Arm | Cat. No. 1771-WN |
| Wiring Arm Screw Torque | 7-9 inch-pounds |
| Agency Certification (when product or packaging is marked) | • CSA certified<br>• CSA Class I, Division 2, Groups A, B, C, D certified<br>• UL listed<br>• CE marked for all applicable directives |
| Installation Data | 1771-5.38 |

[1] Spikes peaks and surges must be within the power rating. Resistive loads only. ac or dc power = 30W max.
[2] Surge limiting circuitry is not provided in the module. For reliable operation, the user must ensure that surges do not exceed either the voltage or current rating of the module.
[3] You use this conductor category information for planning conductor routing as described in the system level installation manual.

### Sample Connection Diagram for the 1771-OWNA Module Driving a 120V ac Input Module

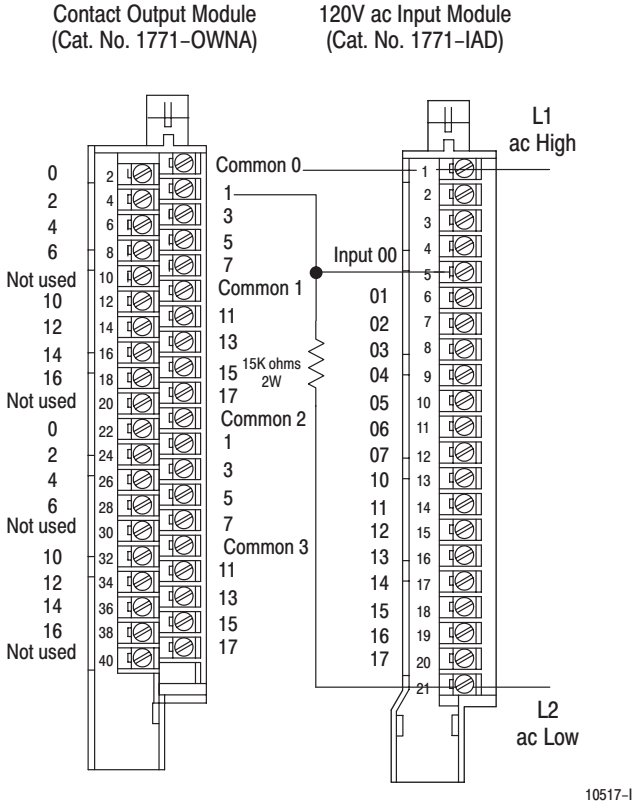

# Power Relay Contact Output Module (Cat. No. 1771-OX)

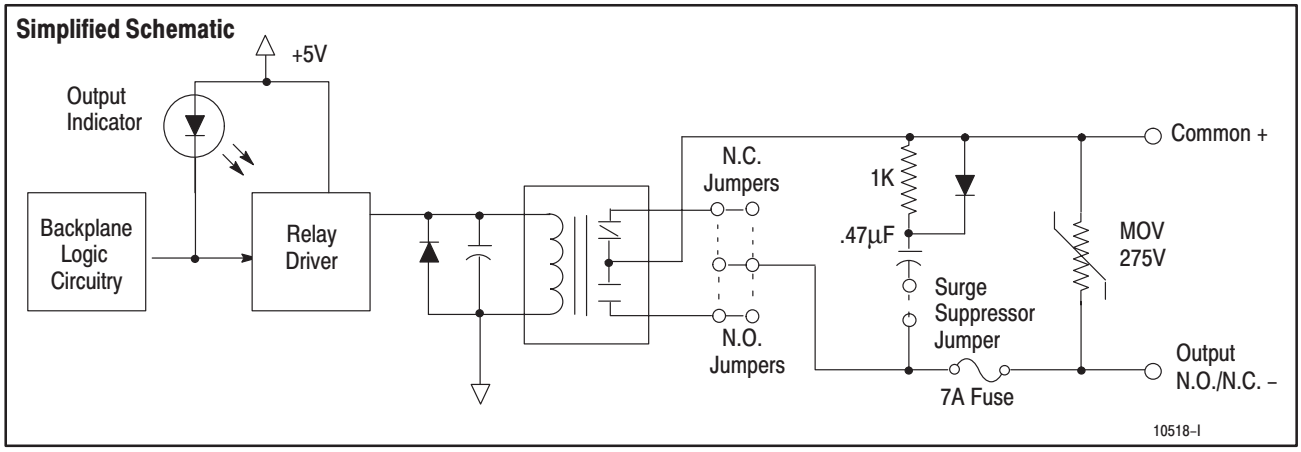


## Application Notes

**Vibration.** The 1771-OX module contains mercury-wetted relays. Handle the module carefully and avoid excessive vibration. This can cause damage to the glass bulb which houses the mercury and contacts. Failure to observe this caution may cause damage to the module's circuitry.

**Mounting.** The power contact output module **must** be mounted within 30° of vertical for the mercury-wetted relays to function. After installation, wait 3 minutes, or manually operate the relays 16 times, before powering up the module in an actual application.

**Surge Suppression.** The 1771-OX module includes a selectable RC network for switching dc voltages. When switching these voltages, include the on-board surge suppression. When switching inductive ac voltages, you must supply an external rc network as close as possible to the load terminals. These are listed below.

**No Increase from Parallel Operation**. Do not attempt to increase load current or wattage capability beyond the rating by connecting two or more outputs in parallel. The slightest variation in output relay switching time may cause one set of the contacts to switch the total load current.

| Starter Size | Starter Voltage | Number of Poles | R(Ω) | C(µF) | Leakage Current | Electrocube PN |
|---|---|---|---|---|---|---|
| 0 | 120V ac | 2–5 | 68 | 0.1 | 8mA | RG 1782–4 |
| | 240V ac | 2–5 | 270 | 0.027 | 4.5mA | |
| 1 | 120V ac | 2–5 | 68 | 0.1 | 8mA | RG 1782–4 |
| | 240V ac | 2–5 | 270 | 0.027 | 4.5mA | |
| 2 | 120V ac | 2–3 | 68 | 0.1 | 8mA | RG 1782–4 |
| | 120V ac | 4–5 | 47 | 0.1 | 8mA | RG 1782–3 |
| | 240V ac | 2–3 | 270 | 0.027 | 4.5mA | |
| | 240V ac | 4–5 | 180 | 0.047 | 7.5mA | |
| 3 | 120V ac | 2–3 | 47 | 0.1 | 8mA | RG 1782–3 |
| | 240V ac | 2–3 | 150 | 0.047 | 8mA | |
| | 240V ac | 4–5 | 100 | 0.1 | 16mA | RG 1782–6 |
| 4 | 240V ac | 2–3 | 100 | 0.1 | 16mA | RG 1782–6 |

**Connection Diagram**

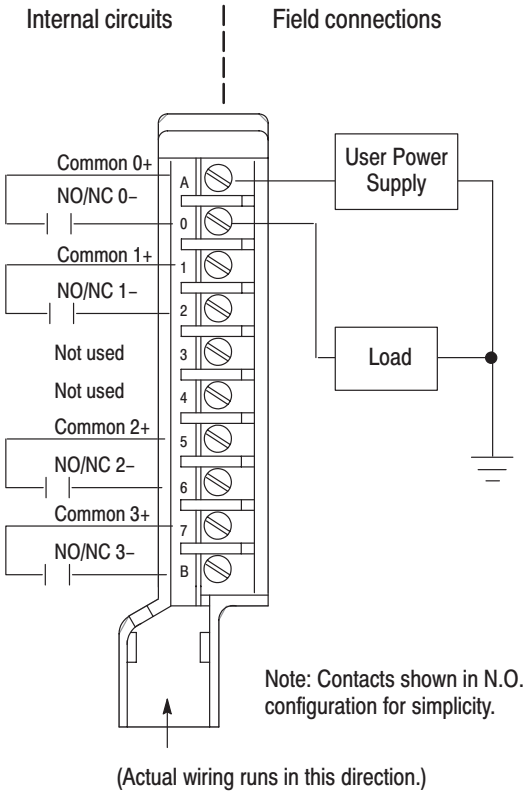

## Specifications (Cat. No. 1771-OX)

| | |
|---|---|
| Outputs per Module | 4 N.O/N.C. |
| Module Location | 1771 I/O chassis |
| Voltage Rating | 0–250V ac rms; 0–175V dc |
| Current Rating | 2A (maximum) |
| Surge Current<br>(Repeatable every 10 seconds) | 5.5A ac peak for 5 seconds<br>6A dc for 5 seconds<br>15A dc for 500ms |
| Power Rating | 200VA |
| On–state Contact Resistance | 0.25 ohms maximum |
| Operate/Release Time | 10ms maximum |
| Power Dissipation | 2.9 Watts (max.), 2.6 Watts (min.) |
| Thermal Dissipation | 9.9 BTU/hr (max.), 8.9 BTU/hr (min.) |
| Backplane Current | 550mA maximum |
| Isolation Voltage | 2500V ac rms |
| Conductors Wire Size<br>Category | 14 gauge (2mm$^2$) stranded maximum<br>3/64 inch (1.2mm) insulation maximum<br>1[1] |
| Environmental Conditions<br>Operating Temperature<br>Storage Temperature<br>Relative Humidity | <br>0 to 60ºC (32 to 140ºF)<br>–40 to 85ºC (–40 to 185ºF)<br>5 to 95% (without condensation) |
| Keying | Between 6 and 8<br>Between 16 and 18 |
| Fuse | 7A, 250V Type 3AG Slo Blow (1 per circuit)<br>Bussman MSL 7.0; Littelfuse 313007 |
| Field Wiring Arm | 1771-WC |
| Wiring Arm Screw Torque | 7-9 inch-pounds |
| Agency Certification<br>(when product or packaging is marked) | • CSA certified<br>• CSA Class I, Division 2, Groups A, B, C, D certified<br>• UL listed<br>• CE marked for all applicable directives |
| Installation Data | 1771-2.43 |

[1] You use this conductor category information for planning conductor routing as described in the system level installation manual.

**Caution:** The power contact output module **must** be mounted within 30° of vertical for the mercury-wetted relays to function. After installation, wait 3 minutes, or manually operate the relays 16 times, before powering up the module in an actual application.

### Jumper Locations

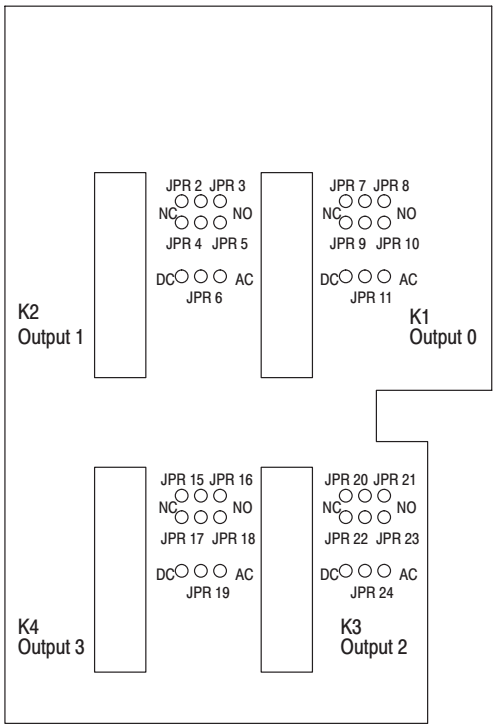


10555–I

### ac and dc Programming Plug Selections

| Output | Jumper (JPR) |
|---|---|
| 0 | 11 |
| 1 | 6 |
| 2 | 24 |
| 3 | 19 |

### Normally-open and Normally-closed Programming Plug Locations

| Module output | Normally–open | Normally–closed |
|---|---|---|
| 0 | JPR 8, 10 | JPR 7, 9 |
| 1 | JPR 3, 5 | JPR 2, 4 |
| 2 | JPR 21, 23 | JPR 20, 22 |
| 3 | JPR 16, 18 | JPR 15, 17 |

# 0-24V Relay Contact Output Module (Cat. No. 1771-OYL)

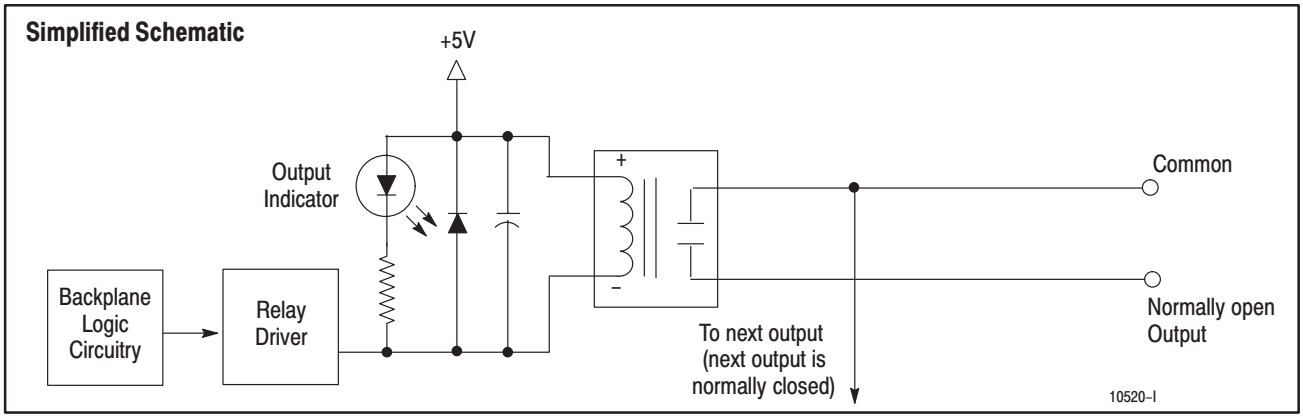


## Application Notes

**Load Type.** 1771-OYL modules do not contain surge limiting circuitry. Use these modules for switching resistive loads only (e.g., lamps, indicators, heating elements). They are not recommended for inductive or capacitive loads (e.g., motor starters, solenoids, relays).

**Isolation.** The 1771-OYL module has 4 normally-open (Form A) and 4 normally-closed (Form B) relays. Outputs are arranged in 4 groups of 2, each group with its own common. Each output is is electrically isolated from module logic circuitry. The module can simultaneously switch all 8 outputs to separate loads, each conducting a maximum load of 100mA continuously at rated power. AC loads switched by the modules should have a power factor of 1.0.

**Connection to Input Modules.** You can use the 1771-OYL module to drive an ac input module up to 24V ac. The 1771-OYL module can drive an input of the following dc modules: 1771-IB, -IBD, -IBN, -IG, -IGD,-IH, -IN, -IND, -IQ, -IQ16, -IT, -IV, and -IVN.

**No Increase from Parallel Operation.** Do not attempt to increase load current or wattage capability beyond the rating by connecting two or more outputs in parallel. The slightest variation in output relay switching time may cause one set of the contacts to switch the total load current.

## Connection Diagram

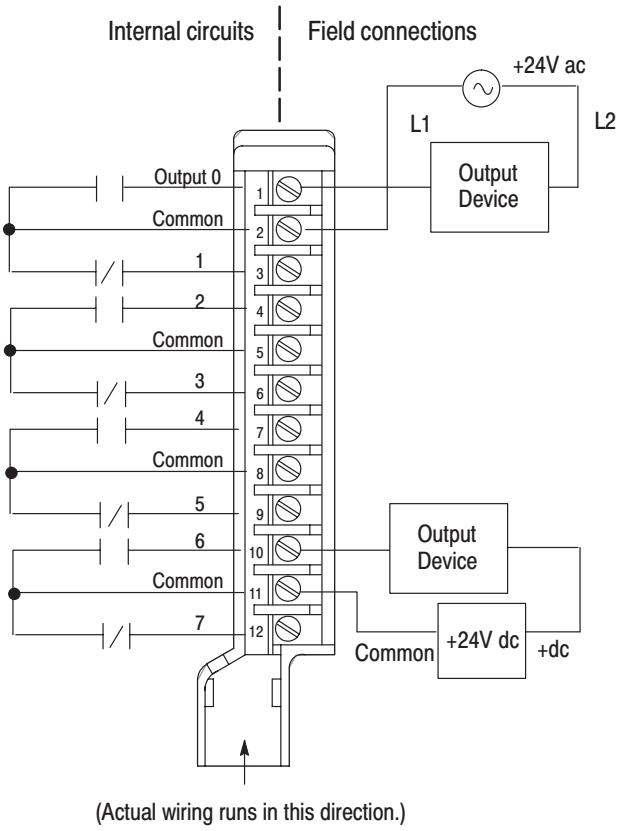

| Specifications (Cat. No. 1771-OYL) | |
|---|---|
| Outputs per Module | 8 (4 groups of 2) |
| Module Location | 1771 I/O chassis |
| Contact Configuration | 4 Form A (N.O.), 4 Form B (N.C.) |
| Voltage Rating | 0–24V ac rms;<br>0–24V dc |
| Current Rating[1] | 100mA per output (maximum) |
| Surge Current | 100mA maximum per output[2]<br>(at rated power) |
| Power Rating | dc: 2.4W per output (resistive)<br>ac (suppressed)[2]: 2.4W per output (resistive) |
| Minimum Contact Load | dc: 1mA @ 0–24V<br>ac: 1mA @ 0–24V |
| Operate/Release Time | 1ms maximum |
| Bounce Time | 1ms maximum |
| Switching Frequency | 10Hz maximum |
| Power Dissipation | 2.2 Watts (max.), 2 Watts (min.) |
| Thermal Dissipation | 7.6 BTU/hr (max.), 6.9 BTU/hr (min.) |
| Backplane Current | 420mA maximum |
| Isolation Voltage | 1000V between open contacts<br>1500V between coil and contact |
| Conductors Wire Size<br>Category | 14 gauge (2mm$^2$) stranded maximum<br>3/64 inch (1.2mm) insulation maximum<br>1[3] |
| Environmental Conditions<br>Operating Temperature<br>Storage Temperature<br>Relative Humidity | <br>0 to 60°C (32 to 140°F)<br>–40 to 85°C (–40 to 185°F)<br>5 to 95% (without condensation) |
| Keying | Between 6 and 8<br>Between 16 and 18 |
| Field Wiring Arm | 1771-WD |
| Wiring Arm Screw Torque | 7-9 inch-pounds |
| Agency Certification<br>(when product or packaging is marked) | • CSA certified<br>• CSA Class I, Division 2, Groups A, B, C, D certified<br>• UL listed<br>• CE marked for all applicable directives |
| Installation Data | 1771-2.184 |

[1] Spikes, peaks, and surges must be within the power rating. Resistive loads only. ac or dc power = 2.4W maximum

[2] Surge limiting circuitry is not provided in the module. For reliable operation, the use must ensure that surges do not exceed either the voltage or current rating of the module.

[3] You use this conductor category information for planning conductor routing as described in the system level installation manual.

**Sample Connection Diagram for the 1771-OYL Module Driving an ac Input Module**

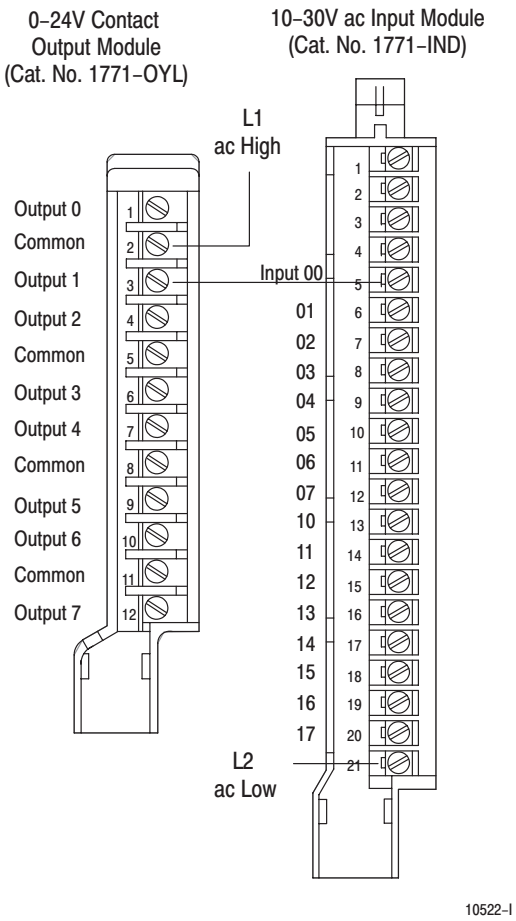

# 0-24V Relay Contact Output Module (Cat. No. 1771-OZL)

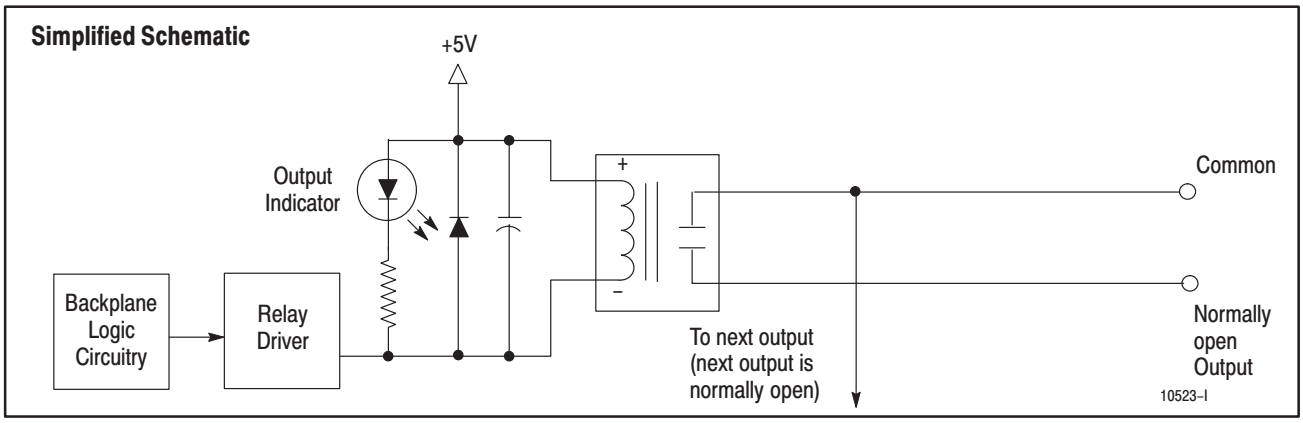


## Application Notes

**Load Type.** 1771-OZL modules do not contain surge limiting circuitry. Use these modules for switching resistive loads only (e.g., lamps, indicators, heating elements). They are not recommended for inductive or capacitive loads (e.g., motor starters, solenoids, relays).

**Isolation.** The 1771-OZL module has 8 normally-open (Form A) relays.The outputs are arranged in 4 groups of 2, each with its own common. Each output is electrically isolated from module logic circuitry. The module can simultaneously switch all 8 outputs to separate loads, each conducting a maximum load of 100mA continuously, at rated power. AC loads switched by the modules should have a power factor of 1.0.

**Connection to Input Modules.** You can use the 1771-OZL module to drive an ac input module up to 24V ac. The 1771-OYL module can drive an input of the following dc modules: 1771-IB, -IBD, -IBN, -IG, -IGD,-IH, -IN, -IND, -IQ, -IQ16, -IT, -IV, and -IVN.

**No Increase from Parallel Operation.** Do not attempt to increase load current or wattage capability beyond the rating by connecting two or more outputs in parallel.The slightest variation in output relay switching time may cause one set of the contacts to switch the total load current.

## Connection Diagram

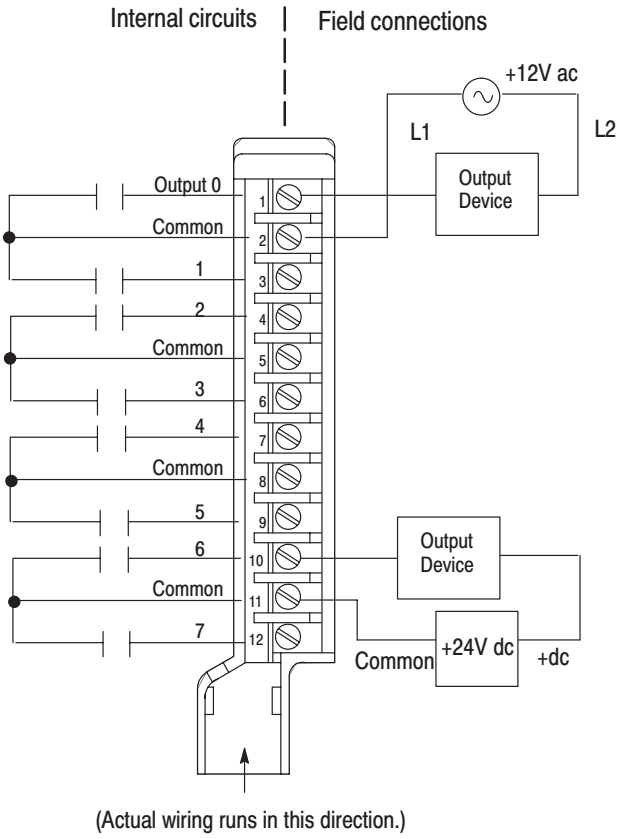

| Specifications (Cat. No. 1771-OZL) | |
|---|---|
| Outputs per Module | 8 (4 groups of 2) |
| Module Location | 1771 I/O chassis |
| Contact Configuration | 8 Form A (N.O.) |
| Voltage Rating | 0–24V ac rms<br>0–24V dc |
| Current Rating[1] | 100mA per output (maximum) |
| Surge Current | 100mA maximum per output[2]<br>(at rated power) |
| Power Rating | dc: 2.4W per output (resistive)<br>ac (suppressed)[2]: 2.4W per output (resistive) |
| Minimum Contact Load | dc: 1mA @ 0–24V<br>ac: 1mA @ 0–24V |
| Operate/Release Time | 1ms maximum |
| Bounce Time | 1ms maximum |
| Switching Frequency | 10Hz maximum |
| Power Dissipation | 2.2 Watts (max.), 2 Watts (min.) |
| Thermal Dissipation | 7.6 BTU/hr (max.), 6.9 BTU/hr (min.) |
| Backplane Current | 420mA maximum |
| Isolation Voltage | 1000V between open contacts<br>1500V between coil and contact |
| Conductors Wire Size<br>Category | 14 gauge (2mm$^2$) stranded maximum<br>3/64 inch (1.2mm) insulation maximum<br>1[3] |
| Environmental Conditions<br>Operating Temperature<br>Storage Temperature<br>Relative Humidity | <br>0 to 60°C (32 to 140°F)<br>–40 to 85°C (–40 to 185°F)<br>5 to 95% (without condensation) |
| Keying | Between 6 and 8<br>Between 16 and 18 |
| Field Wiring Arm | 1771-WD |
| Wiring Arm Screw Torque | 7-9 inch-pounds |
| Agency Certification (when product or packaging is marked) | • CSA certified<br>• CSA Class I, Division 2, Groups A, B, C, D certified<br>• UL listed<br>• CE marked for all applicable directives |
| Installation Data | 1771-2.129 |

1 Spikes, peaks, and surges must be within the power rating. Resistive loads only. ac or dc power = 2.4W max

2 Surge limiting circuitry is not provided in the module. For reliable operation, the user must ensure that surges do not exceed either the voltage or current rating of the module.

3 You use this conductor category information for planning conductor routing as described in the system level installation manual.

**Sample Connection Diagram for the 1771-OZL Module Driving an ac Input Module**

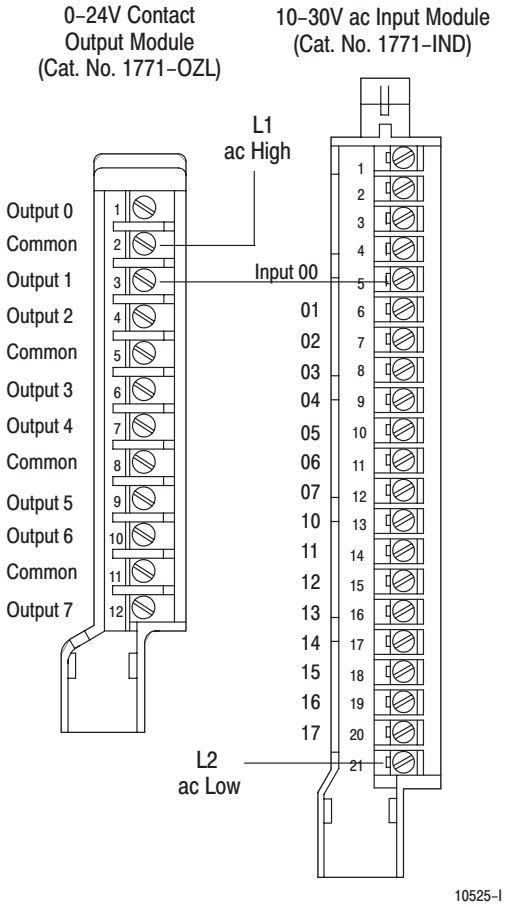

## Related Publications

You can refer to the following publications for more information about Allen-Bradley relay contact modules and other Allen-Bradley discrete I/O modules:

| For information about | Refer to this publication | Publication Number |
|---|---|---|
| 1771–OW module | Selectable Contact Output Module (cat. no. 1771–OW) Installation Data | 1771–2.110 |
| 1771–OW16 module | Selectable Contact Output Module (cat. no. 1771–OW16) Installation Data | 1771–2.206 |
| 1771–OWN module | Contact Output Module (cat. no. 1771–OWN) Installation Data | 1771–5.37 |
| 1771–OWNA module | Contact Output Module (cat. no. 1771–OWNA) Installation Data | 1771–5.38 |
| 1771–OX module | Power Contact Output Module (cat. no. 1771–OX) Installation Data | 1771–2.43 |
| 1771–OYL module | 0–24V Contact Output Module (cat. no. 1771–OYL) Installation Data | 1771–2.134 |
| 1771–OZL module | 0–24V Contact Output Module (cat. no. 1771–OZL) Installation Data | 1771–2.129 |
| all Allen-Bradley 1771 digital I/O modules | 1771 Universal Discrete I/O Modules Selection Guide | 1771–1.25 |
| Allen-Bradley dc solid state digital I/O modules | 1771 Digital dc Solid State I/O Modules Product Data | 1771–2.180 |
| Allen-Bradley ac solid state digital I/O modules | 1771 Digital ac Solid State I/O Modules Product Data | 1771–2.182 |
| Allen-Bradley analog I/O modules | 1771 Analog I/O Modules Product Data | 1771–2.183 |

# Notes

## Support Services

At Allen-Bradley, customer service means experienced representatives at Customer Support Centers in key cities throughout the world for sales service and support. Our value-added services include:

### Technical Support

- SupportPlus programs
- telephone support and 24-hour emergency hotline
- software and documentation updates
- technical subscription services

### Engineering and Field Services

- application engineering assistance
- integration and start-up assistance
- field service
- maintenance support

### Technical Training

- lecture and lab courses
- self-paced computer and video-based training
- job aids and workstations
- training needs analysis

### Repair and Exchange Services

- your only “authorized” source
- current revisions and enhancements
- worldwide exchange inventory
- local support

PLC is a registered trademark of Allen-Bradley Company, Inc.
PLC-2 is a trademark of Allen-Bradley Company, Inc.
PLC-3 is a trademark of Allen-Bradley Company, Inc.
PLC-5 is a trademark of Allen-Bradley Company, Inc.
SLC is a trademark of Allen-Bradley Company, Inc.

**Rockwell** *Automation*

***Allen-Bradley***

Allen-Bradley, a Rockwell Automation Business, has been helping its customers improve productivity and quality for more than 90 years. We design, manufacture and support a broad range of automation products worldwide. They include logic processors, power and motion control devices, operator interfaces, sensors and a variety of software. Rockwell is one of the world's leading technology companies.

## Worldwide representation.

Argentina • Australia • Austria • Bahrain • Belgium • Brazil • Bulgaria • Canada • Chile • China, PRC • Colombia • Costa Rica • Croatia • Cyprus • Czech Republic • Denmark • Ecuador • Egypt • El Salvador • Finland • France • Germany • Greece • Guatemala • Honduras • Hong Kong • Hungary • Iceland • India • Indonesia • Ireland • Israel • Italy • Jamaica • Japan • Jordan • Korea • Kuwait • Lebanon • Malaysia • Mexico • Netherlands • New Zealand • Norway • Pakistan • Peru • Philippines • Poland • Portugal • Puerto Rico • Qatar • Romania • Russia–CIS • Saudi Arabia • Singapore • Slovakia • Slovenia • South Africa, Republic • Spain • Sweden • Switzerland • Taiwan • Thailand • Turkey • United Arab Emirates • United Kingdom • United States • Uruguay • Venezuela • Yugoslavia

Allen-Bradley Headquarters, 1201 South Second Street, Milwaukee, WI 53204 USA, Tel: (1) 414 382-2000 Fax: (1) 414 382-4444

Publication 1771-2.181 – September 1997
Supersedes Publication 1771-2.181 – March 1993

Copyright 1997 Allen-Bradley Company, Inc. Printed in USA