Rockwell Automation

SMC Dialog Plus™ Controller

User Manual

Bulletin 150

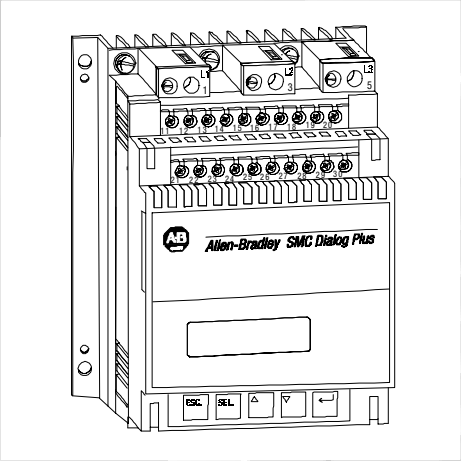

Please Read!

This manual is intended to *guide* qualified personnel in the installation and operation of this product.

Because of the variety of uses for this equipment and because of the differences between this solid-state equipment and electromechanical equipment, the user of and those responsible for applying this equipment must satisfy themselves as to the acceptability of each application and use of the equipment. In no event will Allen-Bradley Company, Inc. be responsible or liable for indirect or consequential damages resulting from the use or application of this equipment.

The illustrations shown in this manual are intended solely to illustrate the text of this manual. Because of the many variables and requirements associated with any particular installation, the Allen-Bradley Company, Inc. cannot assume responsibility or liability for actual use based on the illustrative uses and applications.

No patent liability is assumed by Allen-Bradley Company, Inc. with respect to use of information, circuits, or equipment described in this text.

Reproduction of the content of this manual, in whole or in part, without written permission of the Allen-Bradley Company, Inc. is prohibited.

Important User Information

The information in this manual is organized in numbered chapters. Read each chapter in sequence and perform procedures when you are instructed to do so. Do not proceed to the next chapter until you have completed all procedures.

Throughout this manual attention statements make you aware of safety considerations:

ATTENTION: Identifies information about practices or circumstances that can lead to personal injury or death, property damage, or economic loss.

Attentions help you:

- Identify a hazard
- Avoid the hazard
- Recognize the consequences

Important: Identifies information that is especially important for successful application and understanding of this product.

SMC Dialog Plus, SMB, SCANport, and Accu-Stop are trademarks of Rockwell Automation.
DeviceNet is a trademark of the Open DeviceNet Vendors Association (O.D.V.A.)

For Bulletin 150 SMC Smart Motor Controller technical support on start-up or existing installations, contact your Allen-Bradley representative. In the United States and Canada, you can also call 1-800-765-SMCS (765-7627) for assistance Monday through Friday from 8:00 a.m. to 12:00 noon and 1:00 p.m. to 4:30 p.m. (central time zone). Areas outside the United States and Canada can call 001-414-382-4650 for assistance.

Chapter 1 Product Overview 1-1

Description 1-1
Operation 1-1
Starting Modes 1-2
Soft Start 1-2
Selectable Kickstart 1-3
Current Limit Start. 1-3
Dual Ramp Start 1-4
Full Voltage Start 1-4
Energy Saver 1-5
Phase Rebalance 1-5
Protection and Diagnostics 1-5
Overload 1-5
Stall Protection and Jam Detection 1-8
Open Gate 1-9
Line Faults 1-9
Underload 1-9
Excessive Starts/Hour 1-10
Overtemperature 1-10
Metering 1-10
Communication 1-11
Programming 1-11
Status Indication 1-11
Control Options. 1-12
Soft Stop Option 1-12
Pump Control Option 1-13
Preset Slow Speed Option 1-13
SMB‰ Smart Motor Braking Option 1-14
Accu-Stop‰ Option 1-15
Slow Speed with Braking Option 1-15

Chapter 2 Installation

Receiving 2-1
Unpacking 2-1
Inspecting. 2-1
Storing 2-1
General Precautions 2-2
Heat Dissipation 2-2
Enclosures 2-2
Ventilated Enclosures 2-3
Non-ventilated Enclosures 2-3
Mounting 2-4

Dimensions 2-4
Power Factor Correction Capacitors 2-9
Fast Acting Current-limiting Fuses 2-10
Protective Modules 2-11
Motor Overload Protection 2-11
Bypass 2-11
Two-speed Motors 2-11
Multi-motor Protection 2-11
Human Interface Module 2-12
Connecting the Human Interface Module to the Controller . . . 2-13
Control Enable 2-13
Communication Modules 2-16
Converter Modules 2-16
Electromagnetic Compatibility (EMC) 2-18
Enclosure 2-18
Grounding 2-18
Wiring 2-19
Accessory Requirements 2-19

Chapter 3 Wiring

Terminal Locations 3-1
Power Wiring 3-3
Control Power 3-4
Control Voltage 3-4
Control Wiring 3-4
Fan Power 3-5
Fan Terminations 3-5
Control Terminal Designations 3-6
Grounding Provision 3-6
Standard Controller Wiring Diagrams 3-7

Chapter 4 Programming

Overview 4-1
Keypad Description 4-1
Programming Menu 4-1
Password 4-5
Search 4-5
Parameter Management 4-6
Random Access Memory (RAM) 4-6
Read-only Memory (ROM) 4-6
Electrically Erasable Programmable Read-only Memory (EEPROM) 4-6
Using Parameter Management 4-7
Parameter Modification 4-8
Soft Start 4-9
Current Limit Start 4-9
Dual Ramp Start 4-10
Full Voltage Start 4-10
Basic Setup 4-11
Advanced Setup 4-12

Example Settings 4-13
Undervoltage 4-13
Overvoltage 4-13
Jam 4-13
Underload 4-13

Chapter 5 Calibration
Overview 5-1
Motor Data Entry 5-1
Calibration Procedure 5-3

Chapter 6 Metering
Overview 6-1
Viewing Metering Data 6-1

Chapter 7 Options
Overview 7-1
Human Interface Module 7-1
Programming Parameters 7-3
Control Wiring for SCANport Control 7-5
Soft Stop, Pump Control, and
SMB Smart Motor Braking Options 7-6
Soft Stop Option 7-12
Pump Control Option 7-13
SMB Smart Motor Braking Option 7-14
Preset Slow Speed and Accu-Stop Options 7-15
Preset Slow Speed Option 7-20
Accu-Stop Option 7-21
Slow Speed with Braking Option 7-22

Chapter 8 Serial Communications
Overview 8-1
Logic Control Data 8-1
Control Wiring 8-1
Control Enable 8-2
SMC Status Data 8-3
Reference/Feedback 8-3
Parameter Listing 8-3
Scale Factor Conversion 8-3
Display Unit Equivalents 8-4
Datalinks 8-4
Interfacing 8-4
Processing Time 8-4
Remote I/O Examples 8-5
Example #1 – SLC 500 Controller without Block Transfer 8-5
1203-GD1 Communication Module Switch Settings 8-6
G File Configuration 8-7
I/O Addressing 8-7
Example #1 - Ladder Logic Program 8-9
Example #2 - SLC 500 Controller with Block Transfer 8-10
1203-GD1 Communication Module Switch Settings 8-10
Example #2 – Ladder Logic Program 8-15

Example #3 – PLC 5/20, 5/40, 5/60, and 5/80 8-18
1203-GD1 Communication Module Switch Settings 8-19
I/O Addressing 8-19
Block Transfer Instructions 8-21
Block Transfer Datafiles 8-22
Example #3 Ladder Logic Program 8-23
DeviceNet Examples 8-24
Example #1 SLC Controller with Explicit Messaging 8-24
1203-GK5 Communication Module Switch Settings 8-24
Example Information 8-25
Switch Settings 8-25
I/O Mapping 8-25
SMC Dialog Plus Controller Logic Command Addresses 8-29
Explicit Messaging. 8-29
Explicit Message Request (Get Attribute Multiple) 8-29
Explicit Message Response (Get Attribute Multiple) 8-29
Examples 8-30
Sequence of Events. 8-31
Setting up the Data File 8-31
Example Ladder Logic Program 8-32

Chapter 9 Diagnostics

Overview 9-1
Protection Programming 9-1
Fault Display 9-1
Clear Fault 9-1
Fault Buffer. 9-2
Fault Codes 9-2
Fault Auxiliary Contact 9-2
Fault Definitions 9-3
Power Loss 9-3
Line Fault 9-3
Phase Reversal 9-3
Overvoltage and Undervoltage Protection 9-3
Voltage Unbalance. 9-4
Stall Protection 9-4
Jam Detection. 9-4
Overload Protection. 9-4
Underload 9-4
Open Gate. 9-5
Excess Starts/Hour 9-5
Controller Temp. 9-5
Comm Fault 9-5

Chapter 10 Troubleshooting

Introduction. 10-1
Control Module Removal 10-6
24–135 Amp 10-7

180–360 Amp 10-8
500–1000 Amp 10-10
Control Module Replacement 10-11
Protective Cover Removal 10-12
650–1000 Amp 10-12
MOV Fuse Replacement 10-13
500–1000 Amp 10-13
Power Module and Interface Board Resistance Check 10-13
24–135 Amp 10-14
180-1000 Amp 10-23

Appendix A **Specifications**

Appendix B **Parameter Information**

Appendix C **Renewal Parts**

Appendix D **Accessories**

Figures

Figure 1.1 Soft Start 1-2
Figure 1.2 Selectable Kickstart 1-3
Figure 1.3 Current Limit Start 1-3
Figure 1.4 Dual Ramp Start 1-4
Figure 1.5 Full Voltage Start 1-4
Figure 1.6 Overload Trip Curves 1-7
Figure 1.7 Restart Trip Curves after Auto Reset. 1-7
Figure 1.8 Stall Protection 1-8
Figure 1.9 Jam Detection 1-8
Figure 1.10 ScanPort Location 1-11
Figure 1.11 Built-in Keypad and LCD 1-11
Figure 1.12 Soft Stop Option 1-12
Figure 1.13 Pump Control Option 1-13
Figure 1.14 Preset Slow Speed Option 1-13
Figure 1.15 SMB Smart Motor Braking Option. 1-14
Figure 1.16 Accu-Stop Option 1-15
Figure 1.17 Slow Speed with Braking Option 1-15
Figure 2.1 Dimensions: 24, 35, and 54 Amp Controllers 2-4
Figure 2.2 Dimensions: 97 and 135 Amp Controllers 2-5
Figure 2.3 Dimensions: 180 through 360 Amp Controllers . . . 2-6
Figure 2.4 Dimensions: 500 Amp Controller 2-7
Figure 2.5 Dimensions: 650-1000 Amp Controllers 2-8
Figure 2.6 Typical Wiring Diagram for Power Factor Correction Capacitors 2-9
Figure 2.7 SMC Dialog Plus Controller with Human Interface Module 2-13
Figure 2.8 SMC Dialog Plus Controller with Communication Module 2-16
Figure 2.9 Converter Module Connection Interface 2-17

Figure 2.10 Current Transformer Connection to Converter Module 2-18
Figure 3.1 Wiring Terminal Locations (24 to 54 Amp) 3-1
Figure 3.2 Wiring Terminal Locations (97 and 135 Amp) 3-1
Figure 3.3 Wiring Terminal Locations (180 to 360 Amp) 3-2
Figure 3.4 Wiring Terminal Locations (500 Amp). 3-2
Figure 3.5 Wiring Terminal Locations (650 to 1000 Amp) 3-3
FIgure 3.6 97A and 135A Fan Terminations 3-5
Figure 3.7 180A to 500A Fan Terminations. 3-5
Figure 3.8 650A to 1000A Fan Terminations. 3-5
Figure 3.9 SMC Dialog Plus Controller Control Terminals 3-6
Figure 3.10 Grounding Provision 3-6
Figure 3.11 Typical Wiring Diagram for Standard Controller . . . 3-7
Figure 3.12 Typical Wiring Diagram for Two-Wire Control or Programmable Control Interfacing 3-8
Figure 3.13 Typical Wiring Diagram for Dual Ramp Applications 3-9
Figure 3.14 Typical Wiring Diagram for Start-Stop Control via the SCANport 3-10
Figure 3.15 Typical Wiring Diagram for Retrofit Applications. 3-11
Figure 3.16 Typical Wiring Diagram for Isolation Applications 3-12
Figure 3.17 Typical Wiring Diagram for Bypass Applications 3-13
Figure 3.18 Typical Wiring Diagram for Bypass with Isolation Applications 3-14
Figure 3.19 Typical Wiring Diagram for Shunt Trip Applications 3-15
Figure 3.20 Typical Wiring Diagram for Single Speed Reversing Applications 3-16
Figure 3.21 Typical Wiring Diagram for Two-speed Applications 3-17
Figure 3.22 Typical Wiring Diagram for Hand-Off-Auto (SCANport) Control 3-18
Figure 4.1 Menu Structure Hierarchy 4-2
Figure 4.2 Memory Block Diagram 4-6
Figure 7-1 Typical Wiring Diagram 7-6
Figure 7.2 Typical Retrofit Wiring Diagram 7-7
Figure 7.3 Typical Wiring Diagram for Applications Requiring an Isolation Contactor 7-8
Figure 7.4 Typical Wiring Diagram for Applications Requiring a Bypass Contactor 7-9
Figure 7.5 Typical Wiring Diagram for Two-wire Control or Programmable Controller Interfacing 7-10
Figure 7.6 Typical Wiring Diagram for Hand-Off-Auto (SCANport) Control 7-11
Figure 7.7 Soft Stop Option Sequence of Operation 7-12
Figure 7.8 Pump Control Option Sequence of Operation 7-13

Figure 7.9 SMB Smart Motor Braking Sequence of Operation 7-14
Figure 7.10 Typical Wiring Diagram for the Preset Slow Speed Option 7-15
Figure 7.11 Typical Retrofit Wiring Diagram 7-16
Figure 7.12 Typical Wiring Diagram for Applications Requiring an Isolation Contactor 7-17
Figure 7.13 Typical Wiring Diagram for Applications Requiring a Bypass Contactor 7-18
Figure 7.14 Typical Wiring Diagram for Hand-Off-Auto (SCANport) Control 7-19
Figure 7.15 Preset Slow Speed Option Sequence of Operation 7-20
Figure 7.16 Accu-Stop Option Sequence of Operation 7-21
Figure 7.17 Typical Wiring Diagram for the Slow Speed with Braking Option 7-22
Figure 7.18 Typical Retrofit Wiring Diagram for the Slow Speed with Braking Option 7-23
Figure 7.19 Typical Wiring Diagram for the Slow Speed with Braking Option with an Isolation Contactor . . 7-24
Figure 7.20 Typical Wiring Diagram for the Slow Speed with Braking Option with a Bypass Contactor 7-25
Figure 7.21 Slow Speed with Braking Option Sequence of Operation 7-26
Figure 9.1 Fault Display 9-1
Figure 10.1 Troubleshooting Flowchart. 10-2
Figure 10.2 Removal of Control Module (24–135A) 10-7
Figure 10.3 Removal of Control Module (180–360A) 10-9
Figure 10.4 Removal of Protective Cover (500–1000A) 10-12
Figure 10.5 Removal of Control Module (500–1000A) 10-10
Figure 10.6 MOV Fuse Replacement 10-13
Figure 10.7 Pin Locations for Power Module Resistance Check 10-22
Figure 10.8 Pin Locations for Power Pole Resistance Check (180–1000A) 10-24
Figure 10.9 Gate and Thermistor Lead Identification (180–1000A) 10-25

Tables

Table 2.A Maximum Heat Dissipation. 2-2
Table 2.B Minimum Ventilation Openings 2-3
Table 2.C Recommended Fuses 2-10
Table 2.D Converter Module Selection Guide 2-16
Table 3.A Lug Wire Capacity 3-3
Table 3.B Tightening Torque 3-3
Table 3.C Lug Wire Capacity and Tightening Torque 3-4
Table 3.D Heatsink Fan Control Power 3-4
Table 3.E Control Wiring and Tightening Torque 3-4
Table 4.A Parameter Linear List 4-4
Table 5.A Motor Codes 5-2

Table 8.A Logic Control Data 8-1
Table 8.B SMC Status Data 8-3
Table 8.C Fault Code Cross-reference 9-2
Table 10.A SMC Fault Display Explanation 10-3
Table 10.B Motor Will Not Start — No Output Voltage to the Motor 10-4
Table 10.C Motor Rotates (but does not accelerate to full speed) 10-4
Table 10.D Motor Stops While Running 10-4
Table 10.E Miscellaneous Situations 10-5
Table B.1 Parameter Text/Display Unit Cross Reference. B-5

Product Overview

Description

The SMC Dialog Plus controller offers a full range of starting modes as standard:

- Soft Start with Selectable Kickstart
- Current Limit Start with Selectable Kickstart
- Dual Ramp Start
- Full Voltage Start

Other features that offer further user benefit include:

- Expanded protective features
- Metering
- Communication capability

Innovative starting and stopping options provide enhanced performance:

- Soft Stop
- Pump Control
- Preset Slow Speed
- SMB™ Smart Motor Braking
- Accu-Stop™
- Slow Speed with Braking

These modes, features, and options are further described in this chapter.

Operation

The SMC Dialog Plus controller can operate three-phase squirrel cage motors rated 1–1000A; 200–480V AC or 200–600V AC; 50/60 Hz. Depending upon the catalog number ordered, the controller will accept a control power input of either 100–240V AC or 24V AC/DC. If the control power input option is 100–240V AC, the controller's microprocessor will self-adjust to the input control voltage.

Starting Modes

Soft Start

This mode has the most general application. The motor is given an initial torque setting, which is user-adjustable from 0 to 90% of locked rotor torque. From the initial torque level, the output voltage to the motor is steplessly increased during the acceleration ramp time. The acceleration ramp time is user-adjustable from 0 to 30 seconds. If the SMC Dialog Plus controller senses that the motor has reached the up-to-speed condition during the voltage ramp operation, the output voltage automatically switches to full voltage.

Figure 1.1 Soft Start

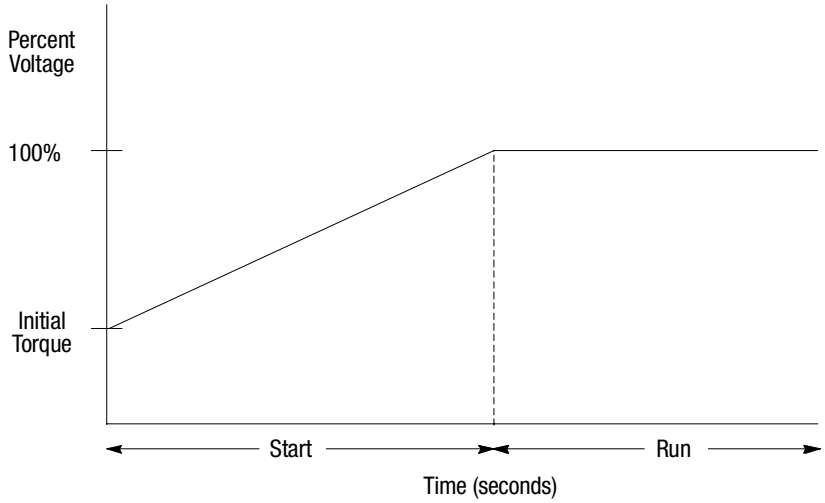

Selectable Kickstart①

This feature provides a boost at startup to break away loads that require a pulse of high torque to get started. This is intended to provide a pulse of current that is 550% of full load current. Selectable kickstart is user-adjustable from 0.0 to 2.0 seconds.

Figure 1.2 Selectable Kickstart

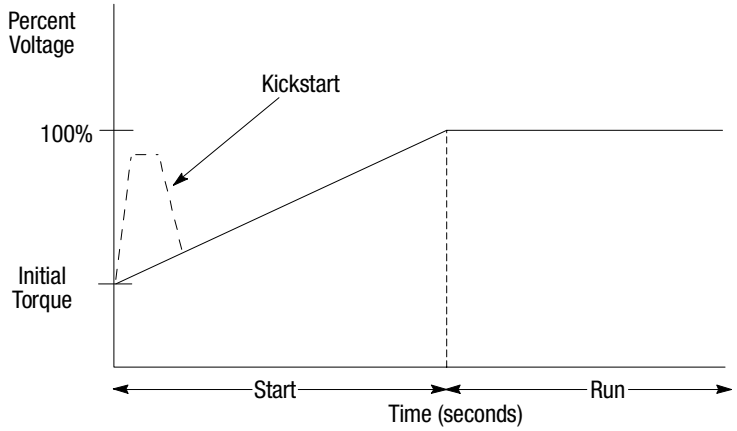

Current Limit Start②

This starting mode provides a fixed reduced voltage start; it is used when limiting maximum starting current is necessary. The Current Limit level is user-adjustable from 50 to 600% of the motor full load ampere rating; and the current limit time is user-adjustable from 0 to 30 seconds. If the SMC Dialog Plus controller senses that the motor has reached the up-to-speed condition during the current limit starting mode, the output voltage automatically switches to full voltage.

Figure 1.3 Current Limit Start

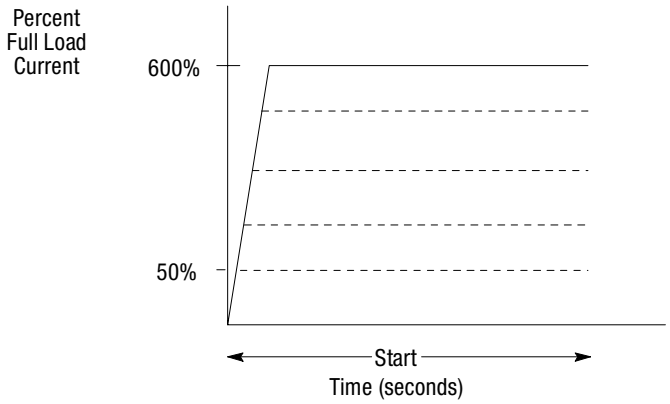

① Kickstart is also available with Current Limit Start.

② The Current Limit Start mode design is based on a motor with a locked rotor current rating that is 600% of the full load current rating.

Starting Modes (cont.)

Dual Ramp Start①

This starting mode is useful on applications that have varying loads (and therefore varying starting torque requirements). Dual Ramp Start allows the user to select between two separate Soft Start profiles with separately adjustable ramp times and initial torque settings.

Figure 1.4 Dual Ramp Start

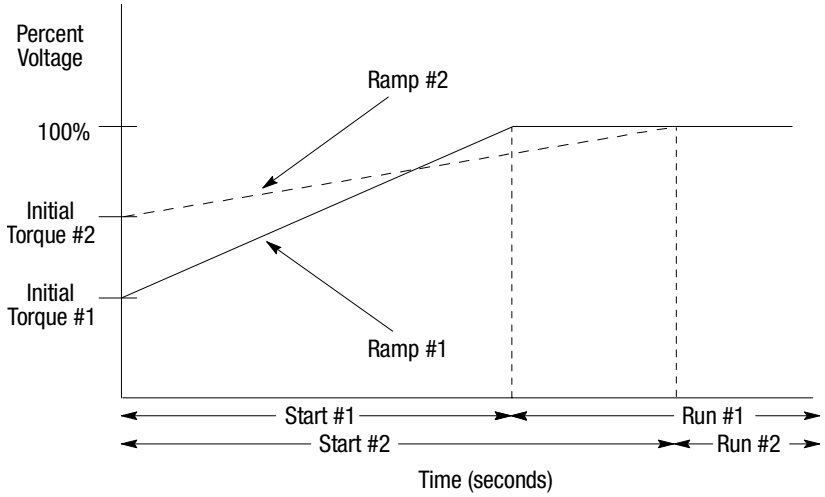

Full Voltage Start

This starting mode is used for applications requiring across-the-line starting. The output voltage to the motor will reach full voltage within 1/4 second.

Figure 1.5 Full Voltage Start

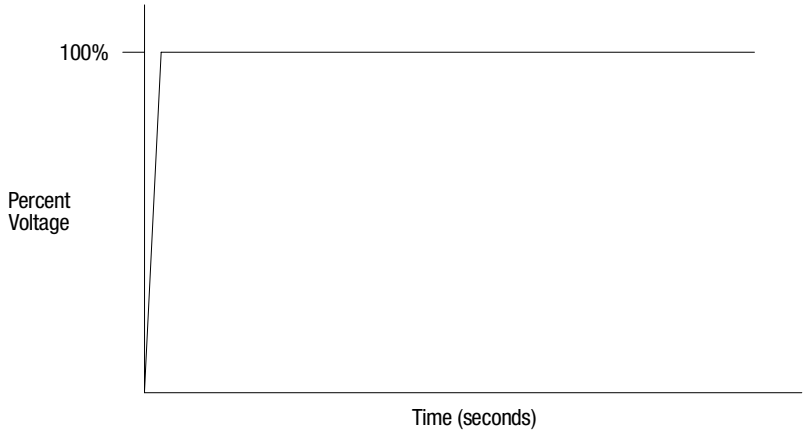

① Dual Ramp Start is available only with the standard controller.

Energy Saver

The Energy Saver feature is typically used in applications where the motor is lightly loaded or unloaded for extended periods of time. With the Energy Saver feature enabled, the SMC Dialog Plus controller continuously monitors motor load with its internal feedback circuitry. Because SCRs control the output voltage, motor power losses may be reduced by decreasing the motor terminal voltage.

Notes: (1) The Energy Saver feature is not available when a bypass contactor is used.
(2) When Energy Saver and Phase Rebalance are both enabled, Phase Rebalance takes precedence in operation.

Phase Rebalance

With the Phase Rebalance feature enabled, the SMC Dialog Plus controller continuously monitors the incoming three-phase line voltage and automatically adjusts the output voltage to balance the three phase currents drawn by the motor.

Notes: (1) Phase Rebalance requires that the Bulletin 825 converter module is utilized.
(2) Phase Rebalance is not active during bypass operation.
(3) When Phase Rebalance and Energy Saver are both enabled, Phase Rebalance takes precedence in operation.

Protection and Diagnostics

The SMC Dialog Plus controller provides the protective and diagnostic features described below.

Overload

The SMC Dialog Plus controller meets applicable requirements as a motor overload protective device. Thermal memory provides added protection and is maintained even when control power is removed. The built-in overload algorithm controls the value stored in Parameter 11, Motor Thermal Usage; an Overload Fault will occur when this value reaches 100%. The programming parameters below provide application flexibility and easy setup.

Parameter	Range
Overload Class	Off, 10, 15, 20, 30
Overload Reset	Manual – Auto
Motor FLC	1.0–999.9 Amps
Service Factor	0.01–1.99

ATTENTION: During slow speed and/or braking operations, current waveforms exhibit non-sinusoidal characteristics. These non-sinusoidal characteristics inhibit the controller's current measurement capability. To compensate for additional motor heating that may result, the controller uses motor thermal modeling, which increments motor thermal usage. This compensation takes place when these options are in use: Preset Slow Speed, Smart Motor Braking, Accu-Stop, and Slow Speed with Braking.

Protection and Diagnostics (cont.)

Notes:

(1) The factory default setting for Overload Class, which is "Off," disables overload protection. An overload trip class and the motor's full load current rating must be programmed to enable overload protection.

(2) The current sensing capability of the SMC Dialog Plus controller is disabled during bypass operation. Using a Bulletin 825 converter module in these applications is recommended to provide current feedback. Otherwise, a separate overload relay is required.

(3) Motors with full load current ratings of 5 Amps and below may require the use of the converter module (Cat. No. 825-MCM20) for improved current measurement accuracy.

(4) Automatic reset of an overload fault requires the start input to be cycled in a 2-wire control scheme. This applies to the following firmware releases: 1.07 (standard), 1A07L (Soft Stop) and 1B05L (Pump Control) or earlier.

Figure 1.6 and Figure 1.7 provide the overload trip curves for the available trip classes.

Figure 1.6 Overload Trip Curves

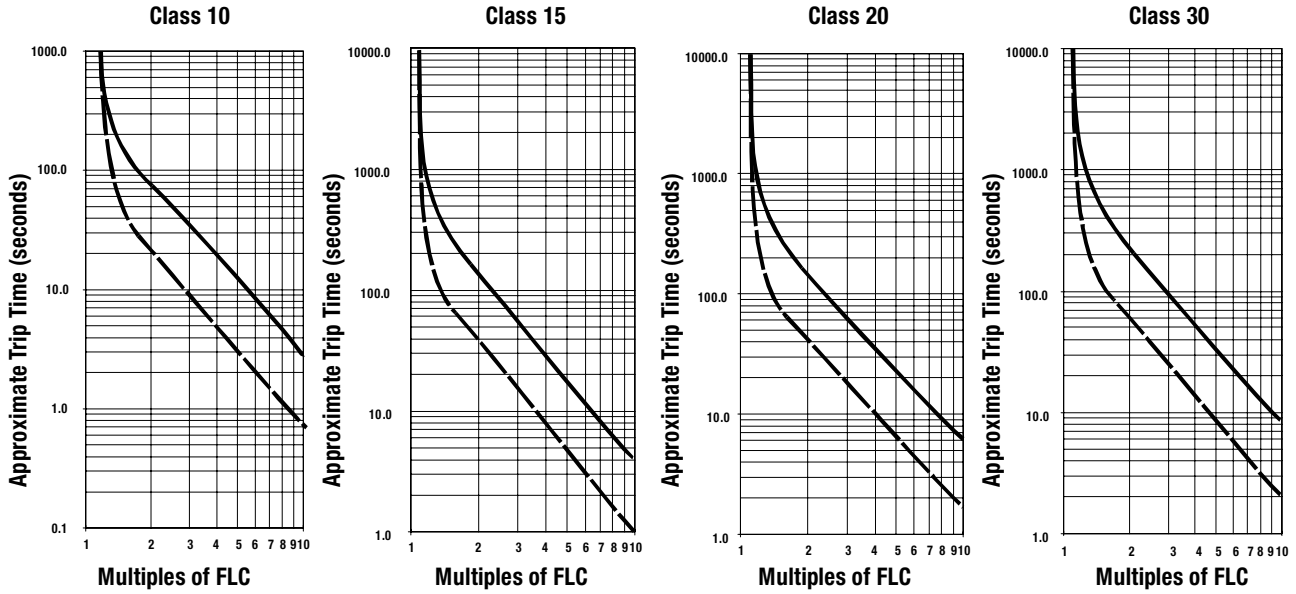

Approximate trip time for 3-phase balanced condition from cold start.

Approximate trip time for 3-phase balanced condition from cold start.

Figure 1.7 Restart Trip Curves after Auto Reset

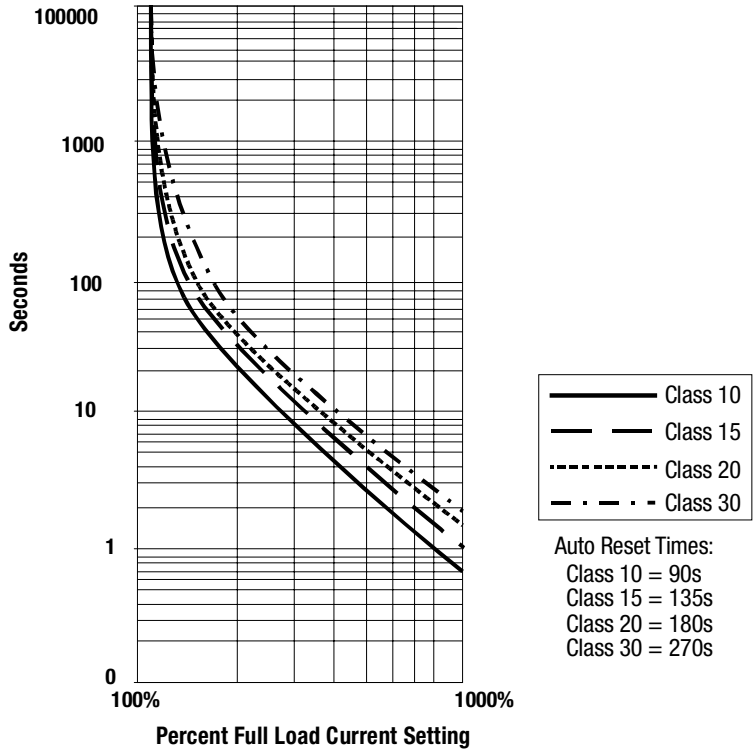

Protection and Diagnostics (cont.)

Stall Protection and Jam Detection

The SMC Dialog Plus controller provides both stall protection and jam detection for enhanced motor and system protection.

- Stall protection is user-adjustable from 0.0 to 10.0 seconds (in addition to the ramp time programmed).
- Jam detection allows the user to determine the jam level (up to 999% of the motor's FLC rating) and the delay time (up to 10.0 seconds) for application flexibility.

Figure 1.8 Stall Protection

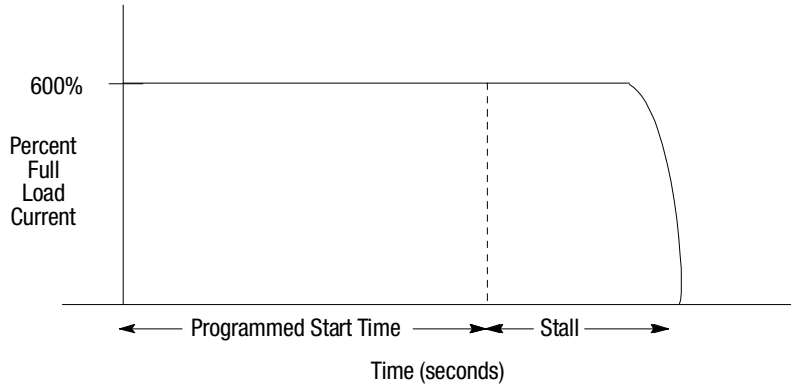

Figure 1.9 Jam Detection①

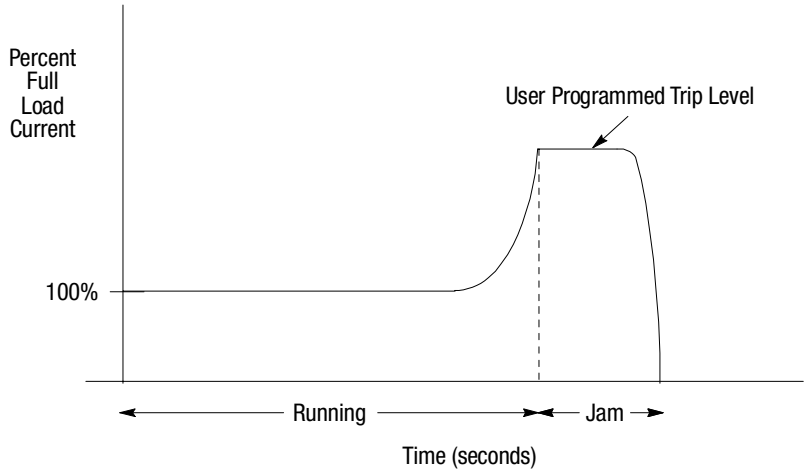

① Jam detection is disabled during slow speed and braking operation.

Open Gate

An open gate fault indicates that improper SCR firing, typically caused by an open SCR gate, has been detected on one of the power poles. Before the controller shuts down, it will attempt to start the motor a total of three times.

Line Faults

The SMC Dialog Plus controller continually monitors line conditions for abnormal factors. Pre-start protection includes:

- Power Loss (with phase indication)
- Line Fault (with phase indication)
  - Power loss
  - Missing load connection
  - Shorted SCR

Running protection includes:

- Line Fault (no phase indication)
  - Power loss
  - Missing load connection
  - Shorted SCR

Additional programmable parameters are provided for the following protective features:

- Undervoltage① can be adjusted from 0 to 99% of the programmed line voltage and has a programmable delay time of 0 to 99 seconds.
- Overvoltage① can be adjusted from 0 to 199% of the programmed line voltage and has a programmable delay time of 0 to 99 seconds.
- Phase reversal② protection can be toggled either On or Off.
- Voltage unbalance① protection can be programmed for trip levels of 0 to 25% with a programmable delay time of 0 to 99 seconds.

Underload③

Utilizing the underload protection of the SMC Dialog Plus controller, motor operation can be halted if a sudden drop in current is sensed.

The SMC Dialog Plus controller provides an adjustable underload trip setting from 0 to 99% of the programmed motor full load current rating. Trip delay time can be adjusted from 0 to 99 seconds.

① Undervoltage, overvoltage, and voltage unbalance protection are disabled during braking operation.

② Phase reversal protection is functional only at pre-start.

③ Underload protection is disabled during slow speed and braking operations.

Protection and Diagnostics (cont.)

Excessive Starts/Hour

The SMC Dialog Plus controller allows the user to program the allowed number of starts per hour (up to 99). This helps eliminate motor stress caused by repeated starting over a short time period.

Overtemperature

The SMC Dialog Plus controller monitors the temperature of the SCRs by using internal thermistors. When the power poles' maximum rated temperature is reached, SCR firing is inhibited.

An overtemperature condition can indicate inadequate ventilation, high ambient temperature, overloading, or excessive cycling. After the SCR temperature is reduced to allowable levels, the fault can be cleared (see page 9-1 for instructions).

Metering

Power monitoring parameters include:

- Three-phase current
- Three-phase voltage
- Power in kW
- Power usage in kWH
- Power factor
- Motor thermal capacity usage
- Elapsed time

Notes:
(1) The current sensing capability of the SMC Dialog Plus controller is disabled during bypass operation. A Bulletin 825 converter module is required to maintain the three-phase current, kW, kWH, and motor thermal capacity measurements.
(2) Current measurement is not available during the slow speed and/or braking operations of the Preset Slow Speed, SMB Smart Motor Braking, Accu-Stop and Slow Speed with Braking control options.
(3) Voltage measurement is not available during the braking operation of the SMB Smart Motor Braking, Accu-Stop, and Slow Speed with Braking control options.
(4) The power factor parameter is provided as a displacement power factor value. Power factor measurement is disabled during bypass operation.
(5) The elapsed time and kWH values are automatically saved to memory every 12 hours.
(6) Motor thermal capacity usage is determined by the built-in electronic thermal overload protection system. An overload fault occurs when this value reaches 100%.

Communication

A serial interface port (called SCANport™) is provided as standard, which allows connection to the Bulletin 1201 human interface modules and the Bulletin 1203 communication modules.

Figure 1.10 SCANport Location

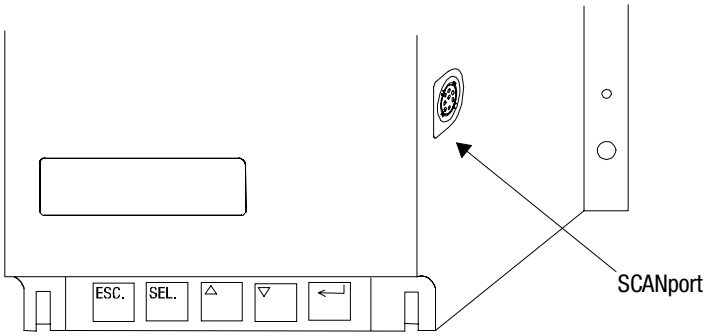

ATTENTION: Only one peripheral device can be connected to the SCANport. The maximum output current through the SCANport is 100 ma.

Programming

Setup is easy with the built-in keypad and two-line, sixteen character backlit LCD. Parameters are organized in a four-level menu structure, using a text format for straightforward programming.

Figure 1.11 Built-in Keypad and LCD

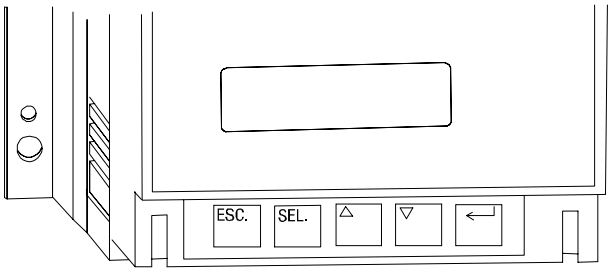

Status Indication

Three programmable hard contact outputs are provided as standard. The first two contacts are Form C and programmable for Normal/Up-to-speed. The third contact is programmable as Normal/Fault.

Control Options

The SMC Dialog Plus controller offers the control options described below.

Important: The options listed in this section are mutually exclusive and must be specified when ordering. An existing controller may be upgraded to another control option by replacing the control module. Consult your nearest/local Allen-Bradley sales office.

Soft Stop Option

This option can be used in applications that require an extended coast-to-rest. The voltage ramp down time is user-adjustable from 0 to 60 seconds and is adjusted independently from the starting time. The load will stop when the output voltage drops to a point where the load torque is greater than the developed motor torque.

Figure 1.12 Soft Stop Option

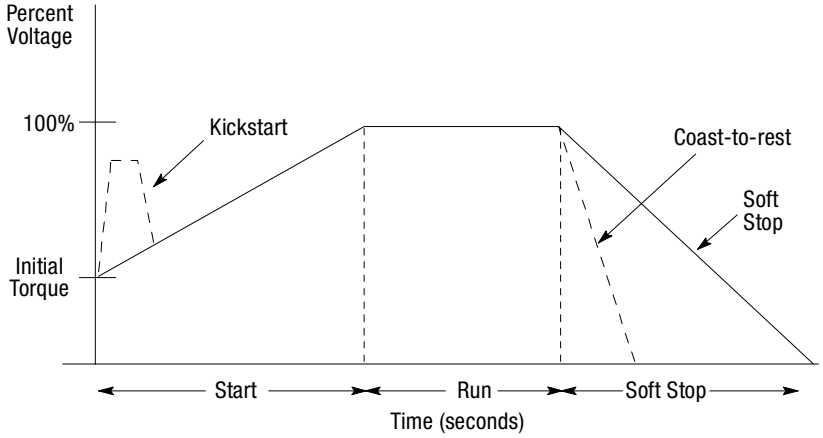

ATTENTION: Soft Stop is not intended to be used as an emergency stop. Refer to the applicable standards for emergency stop requirements.

Pump Control Option

This option reduces surges during the starting and stopping of a centrifugal pump by smoothly accelerating and decelerating the motor. The microprocessor analyzes the motor variables and generates commands that control the motor and reduce the possibility of surges occurring in the system.

The starting time is programmable from 0–30 seconds, and the stopping time is programmable from 0–120 seconds.

Figure 1.13 Pump Control Option

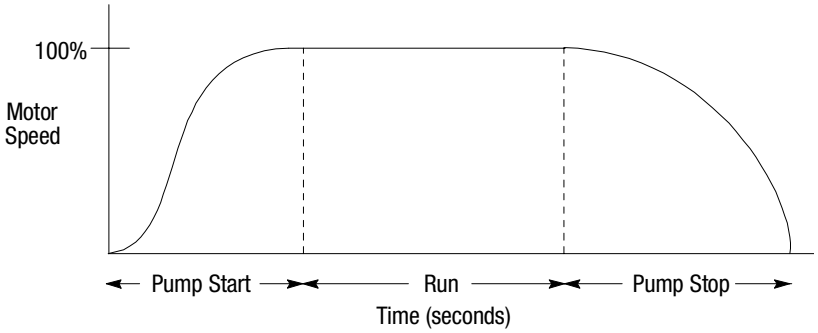

ATTENTION: Pump stopping is not intended to be used as an emergency stop. Refer to the applicable standard for emergency stop requirements.

ATTENTION: Pump stopping may cause motor heating depending on the mechanical dynamics of the pumping system. Therefore, select the lowest stopping time setting that will satisfactorily stop the pump.

Preset Slow Speed Option

This option can be used in applications that require a slow speed jog for general purpose positioning. Preset Slow Speed provides either 7% of base speed (low) or 15% of base speed (high) settings in the forward direction. Reverse can also be programmed and offers 10% of base speed (low) and 20% of base speed (high) settings.

Figure 1.14 Preset Slow Speed Option

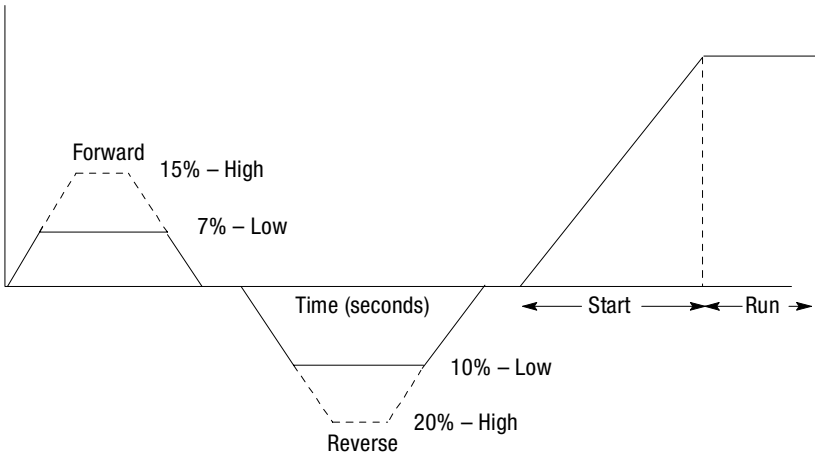

ATTENTION: Slow speed running is not intended for continuous operation due to reduced motor cooling.

Control Options (cont.)

SMB™ Smart Motor Braking Option

This option can be used in applications that require reduced stopping times. The SMC Dialog Plus controller incorporates a microprocessor-based system that applies braking current to a standard squirrel cage induction motor without any additional equipment. This option offers a user-adjustable braking current setting from 0% to 400% of the motor's full load current rating. Further, it provides automatic shut-off at zero speed detection.

Figure 1.15 SMB Smart Motor Braking Option

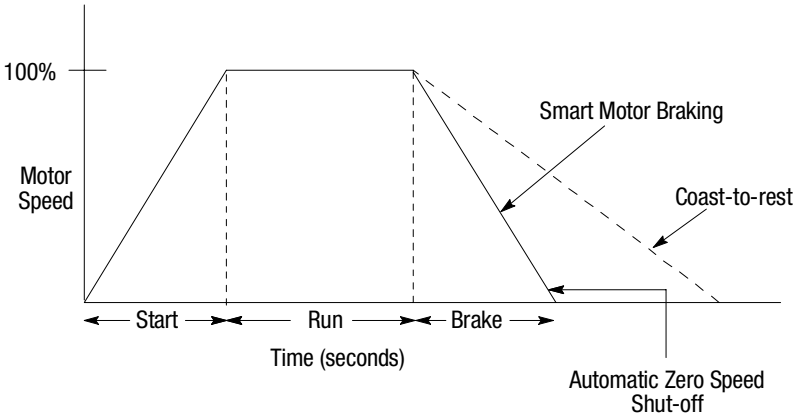

Note: All braking current settings in the range of 1–100% will provide 100% braking current to the motor.

ATTENTION: SMB Smart Motor Braking is not intended to be used as an emergency stop. Refer to applicable standards for emergency stop requirements.

Accu-Stop™ Option

This option combines the benefits of the SMB Smart Motor Braking and Preset Slow Speed options. For general purpose positioning, the Accu-Stop option provides a brake from full speed to the preset slow speed setting, then brakes to stop.

Figure 1.16 Accu-Stop Option

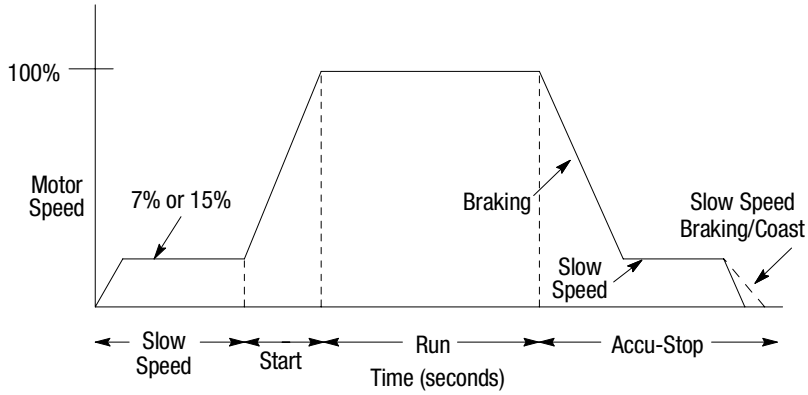

Slow Speed with Braking Option

The Slow Speed with Braking option provides a jog speed for process set-up and braking-to-stop at the end of the cycle.

Figure 1.17 Slow Speed with Braking Option

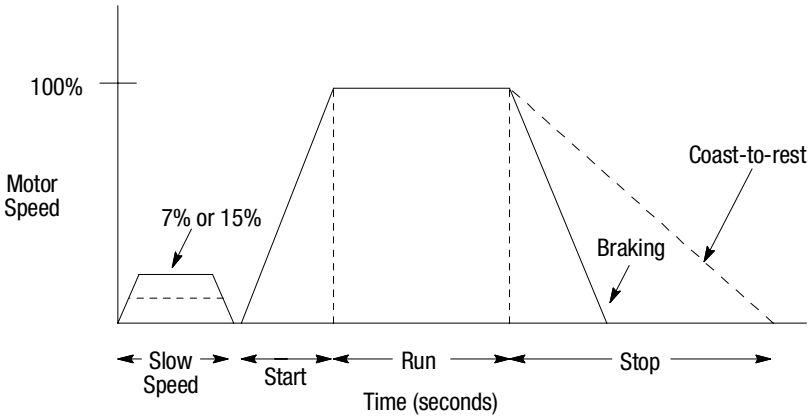

ATTENTION: Accu-Stop and Slow Speed with Braking are not intended to be used as an emergency stop. Refer to applicable standards for emergency stop requirements.

Installation

Receiving

It is the responsibility of the user to thoroughly inspect the equipment before accepting the shipment from the freight company. Check the item(s) received against the purchase order. If any items are damaged, it is the responsibility of the user not to accept delivery until the freight agent has noted the damage on the freight bill. Should any concealed damage be found during unpacking, it is again the responsibility of the user to notify the freight agent. The shipping container must be left intact and the freight agent should be requested to make a visual inspection of the equipment.

Unpacking

Remove all packing material, wedges, or braces from within and around the controller. Remove all packing material from the heat sink.

Inspecting

After unpacking, check the item(s') nameplate catalog number against the purchase order.

Storing

The controller should remain in its shipping container prior to installation. If the equipment is not to be used for a period of time, it must be stored according to the following instructions in order to maintain warranty coverage.

- Store in a clean, dry location.
- Store within an ambient temperature range of –20°C to +75°C (–4°F to +167°F).
- Store within a relative humidity range of 0% to 95%, noncondensing.
- Do not store equipment where it could be exposed to a corrosive atmosphere.
- Do not store equipment in a construction area.

General Precautions

In addition to the precautions listed throughout this manual, the following statements, which are general to the system, must be read and understood.

ATTENTION: The controller contains ESD (electrostatic discharge) sensitive parts and assemblies. Static control precautions are required when installing, testing, servicing, or repairing the assembly. Component damage may result if ESD control procedures are not followed. If you are not familiar with static control procedures, refer to applicable ESD protection handbooks.

ATTENTION: An incorrectly applied or installed controller can damage components or reduce product life. Wiring or application errors, such as undersizing the motor, incorrect or inadequate AC supply, or excessive ambient temperatures, may result in malfunction of the system.

ATTENTION: Only personnel familiar with the controller and associated machinery should plan or implement the installation, start-up, and subsequent maintenance of the system. Failure to do this may result in personal injury and/or equipment damage.

Heat Dissipation

The following table provides the maximum heat dissipation at rated current for the controllers. For currents lower than rated value, heat dissipation will be reduced.

Table 2.A Maximum Heat Dissipation

SMC Rating	24A	35A	54A	97A	135A	180A	240A	360A	500A	650A	720A	850A	1000A
Max. Watts	110	150	200	285	410	660	935	1170	1400	2025	2250	2400	2760

Enclosures

The open-style design of the SMC Dialog Plus controller requires that it be installed in an enclosure. **The internal temperature of the enclosure must be kept within the range of 0°C to 50°C.**

Ventilated Enclosures

For Type 1 (IP42) enclosures, the following guidelines are recommended to limit the maximum controller ambient temperature.

There should be a clearance of at least six inches (15 cm) above and below the controller. This area allows air to flow through the heatsink. Ventilation openings are required above and below this air space.

The ventilation outlet should be placed at least six inches (15 cm) above the controller with the ventilation inlet placed near the bottom of the enclosure. A filter is required to prevent contaminants from entering the enclosure.

Use the table below to determine the minimum ventilation openings and fan/blower requirements.

Table 2.B Minimum Ventilation Openings

SMC Rating	Top Cutout ①③	Bottom Cutout ①③	Fan Size ①
24–54A	65 cm^2 (10 in^2)	65 cm^2 (10 in^2)	110 CFM
97 and 135A	233 cm^2 (36 in^2)	233 cm^2 (36 in^2)	110 CFM
180A	13 × 51 (5 × 20)	②	100 CFM
240A	13 × 51 (5 × 20)	②	250 CFM
360A	13 × 51 (5 × 20)	②	(2) 250 CFM
500A	13 × 41 (5 × 16)	②	275 CFM
650A	②	13 × 76 (5 × 30)	(3) 240 CFM
720A	②	13 × 76 (5 × 30)	(3) 240 CFM
850A	②	13 × 76 (5 × 30)	(3) 240 CFM
1000A	②	13 × 76 (5 × 30)	(3) 240 CFM

① Cutout size assumes 50% blockage (filters, louvers, etc.)

② Cutout size is the same as required for the particular fan or blower being used.

③ Dimensions are in centimeters (inches in parentheses).

Non-ventilated Enclosures

For Type 12 (IP54) or non-ventilated enclosures, it is recommended that a bypass contactor be used. This will allow the SMC Dialog Plus controller to bring the motor up-to-speed. After the controller is up to full voltage, it is bypassed. Note that the Energy Saver, Phase Rebalance, some metering functions, and some protective features of the controller may no longer be available. See Figure 3.17 on page 3-13 for this configuration.

Mounting

The controller is convection cooled. Additionally, units rated for 97A and above are fan cooled. It is important to locate the controller in a position that allows air to flow vertically through the power module. **The controller must be mounted with heatsink fins in a vertical plane and have a minimum of six inches (15 cm) free space above and below the controller.**

Dimensions

Figure 2.1 Dimensions: 24, 35, and 54 Amp Controllers

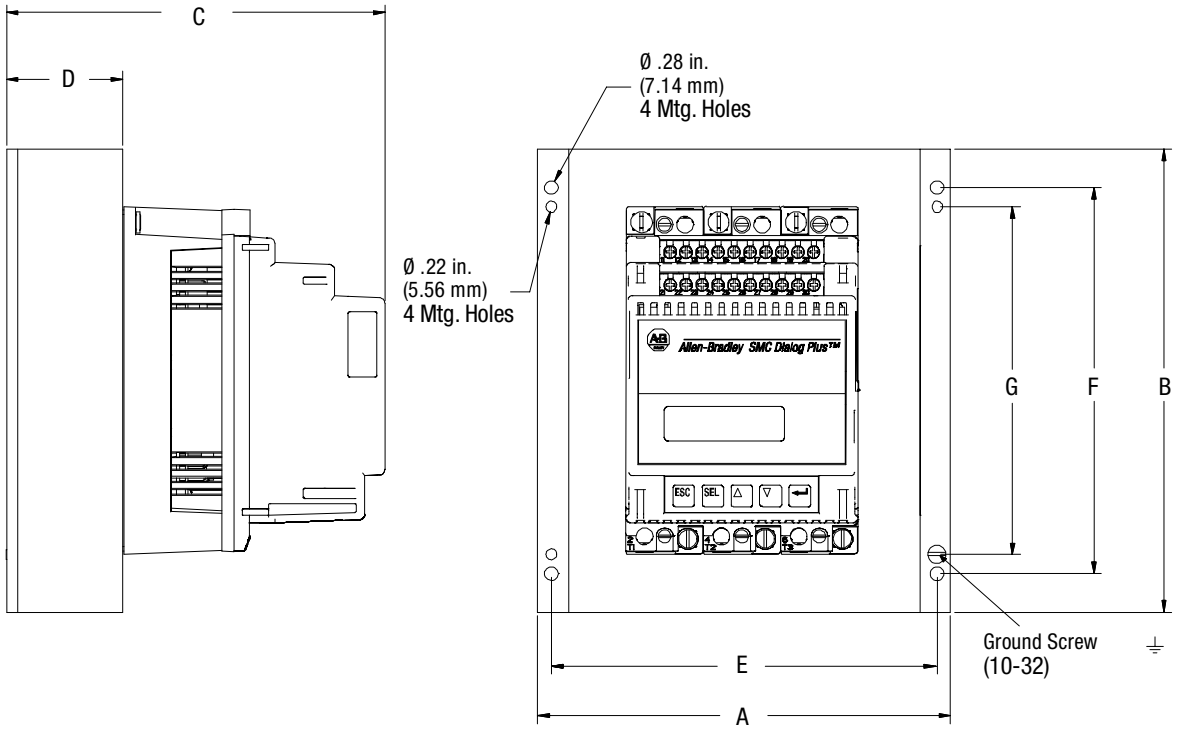

	Unit	A Width	B Height	C Depth	D	E	F	G	H	J	Approx. Ship. Wt.
24A Controller	mm	154	180	185	50	140	160	140	10	20	4.5 kg
	in.	6-1/16	7-3/32	7-19/64	1-31/32	5-33/64	6-5/16	5-33/64	13/32	51/64	10 lbs.
35A Controller	mm	214	240	195	60	200	200	180	20	30	6.8 kg
	in.	8-7/16	9-39/64	7-11/16	2-23/64	7-7/8	7-7/8	7-3/32	51/64	1-3/16	15 lbs.
54A Controller	mm	244	290	225	90	230	240	200	25	45	11.3 kg
	in.	9-39/64	11-22/64	8-7/8	3-35/64	9-1/64	9-29/64	7-7/8	63/64	1-25/32	25 lbs.

All dimensions are approximate and are not intended for manufacturing purposes. Refer to the nearest Allen-Bradley sales office for complete dimension drawings.

Figure 2.2 Dimensions: 97 and 135 Amp Controllers

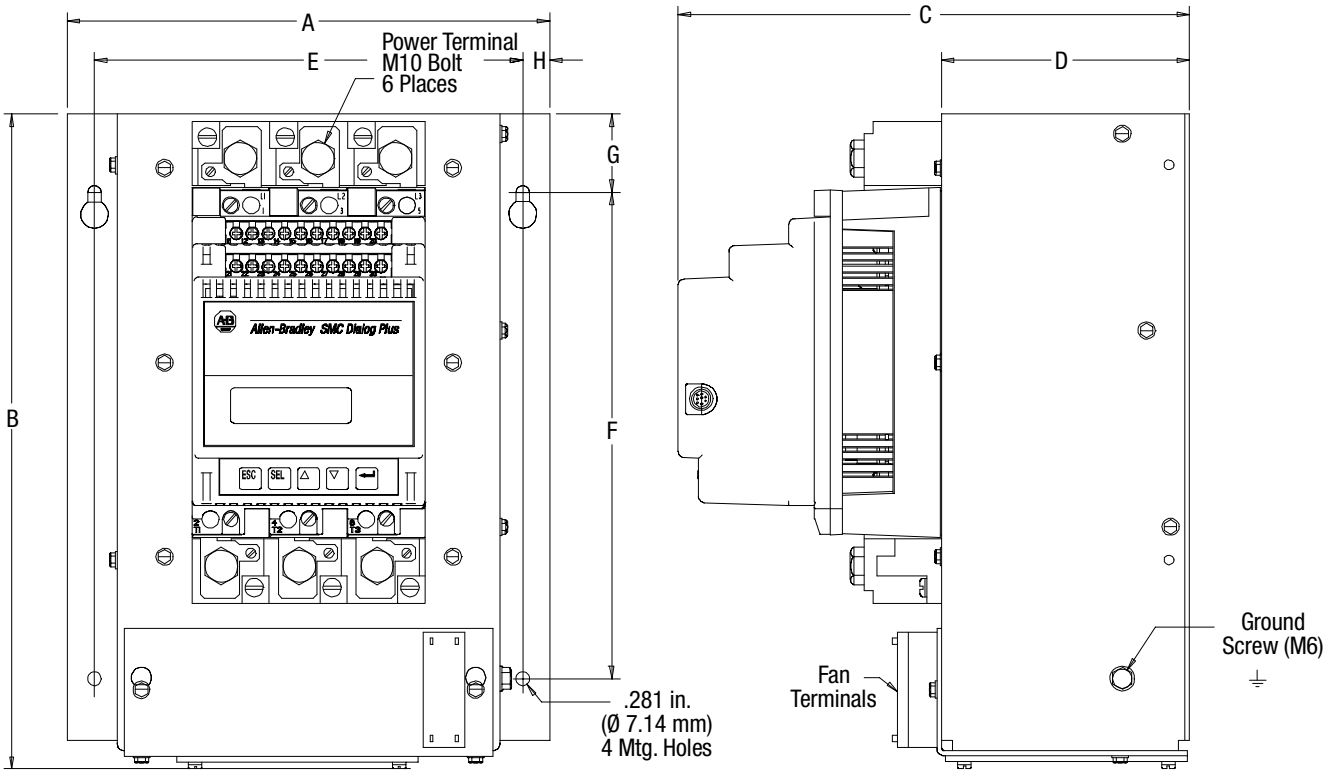

	Unit	A Width	B Height	C Depth	D	E	F	G	H	Approx. Ship. Wt.
97A Controller	mm	248	336	256.2	128	220	250	40.4	14	10.4 kg
	in.	9-49/64	13-15/64	10-3/32	5-3/64	8-21/32	9-27/32	1-39/64	9/16	23 lbs.
135A Controller	mm	248	336	256.2	128	220	250	40.4	14	11.8 kg
	in.	9-49/64	13-15/64	10-3/32	5-3/64	8-21/32	9-27/32	1-39/64	9/16	26 lbs.

All dimensions are approximate and are not intended for manufacturing purposes. Refer to the nearest Allen-Bradley sales office for complete dimension drawings.

Mounting (cont.)

Figure 2.3 Dimensions: 180 through 360 Amp Controllers

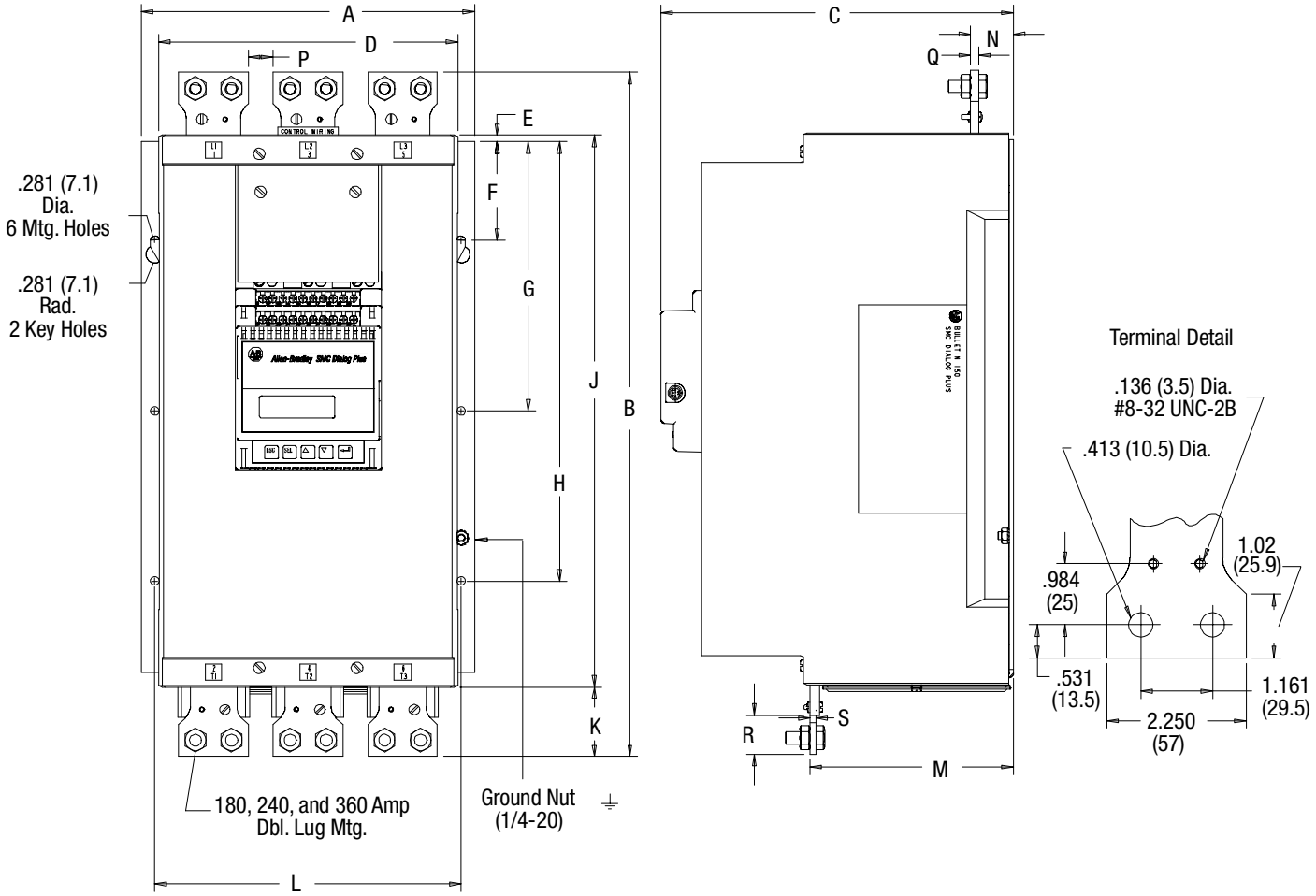

	Unit	A Width	B Height	C Depth	D	E	F	G	H	J	K	L	M	N	P	Q	R	S	Approx. Ship. Wt.
180A Cont.	mm	273	580	294.2	245	5	81	221	361	453	56	251	167	35	19.3	8.4	28	4.7	25 kg
	in.	10.750	22.063	11.583	9.647	.207	3.195	8.695	14.195	17.817	2.213	9.880	6.562	1.375	.76	.250	1.1	.187	55 lbs.
240–360A Cont.	mm	273	580	294.2	245	5	81	221	361	453	56	251	167	35	19.3	8.4	28	4.7	30 kg
	in.	10.750	22.063	11.583	9.647	.207	3.195	8.695	14.195	17.817	2.213	9.880	6.562	1.375	.76	.250	1.1	.187	65 lbs.

All dimensions are approximate and are not intended for manufacturing purposes. Refer to the nearest Allen-Bradley sales office for complete dimension drawings.

Figure 2.4 Dimensions: 500 Amp Controller

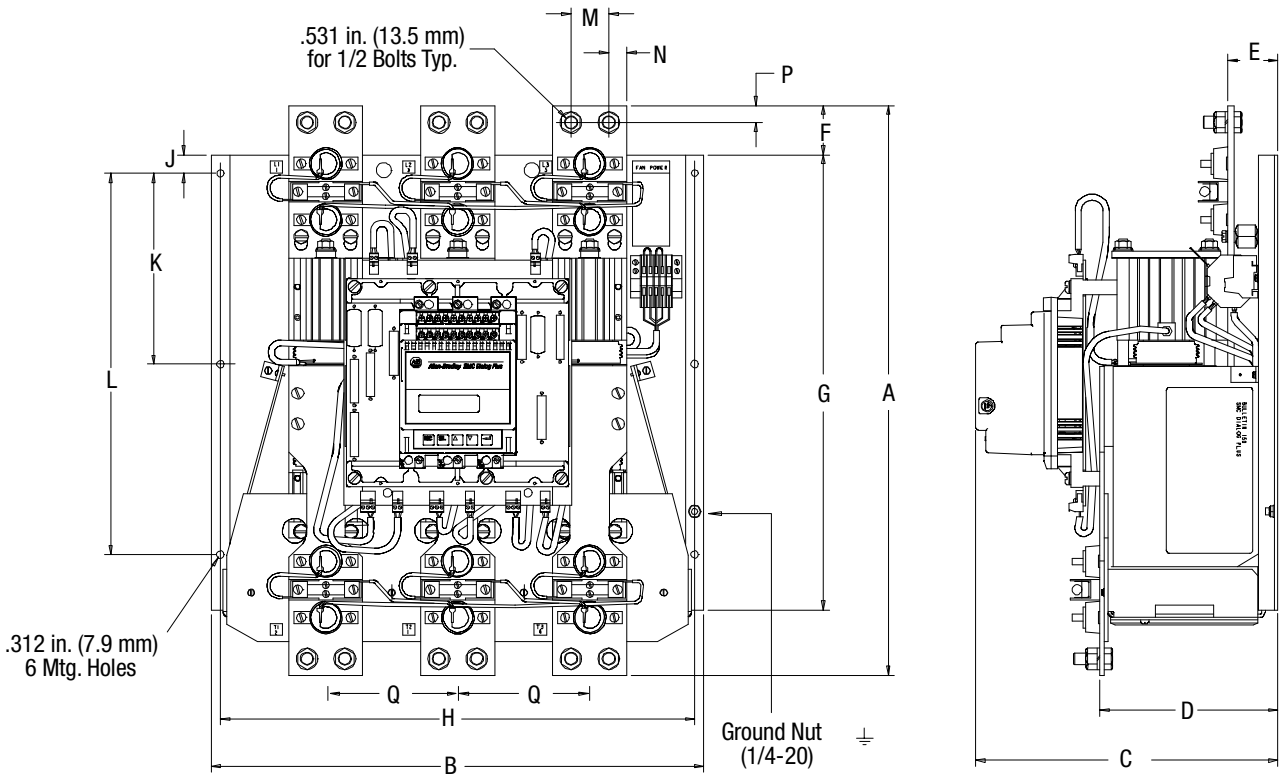

Unit	A Height	B Width	C Depth	D	E	F	G	H	J	K	L	M	N	P	Q	Approx. Ship. Wt.
mm	588.4	508	310.7	183	51.4	50.8	469.9	489	19	196.9	393.7	38.9	18.6	17.5	136	40.8 kg
in.	23-11/64	20	12-15/64	7-13/16	2-1/32	2	18-1/2	19-1/4	3/4	7-3/4	15-1/2	1-17/32	47/64	11/16	5-11/32	90 lbs.

All dimensions are approximate and are not intended for manufacturing purposes. Refer to the nearest Allen-Bradley sales office for complete dimension drawings.

Mounting (cont.)

Figure 2.5 Dimensions: 650-1000 Amp Controllers

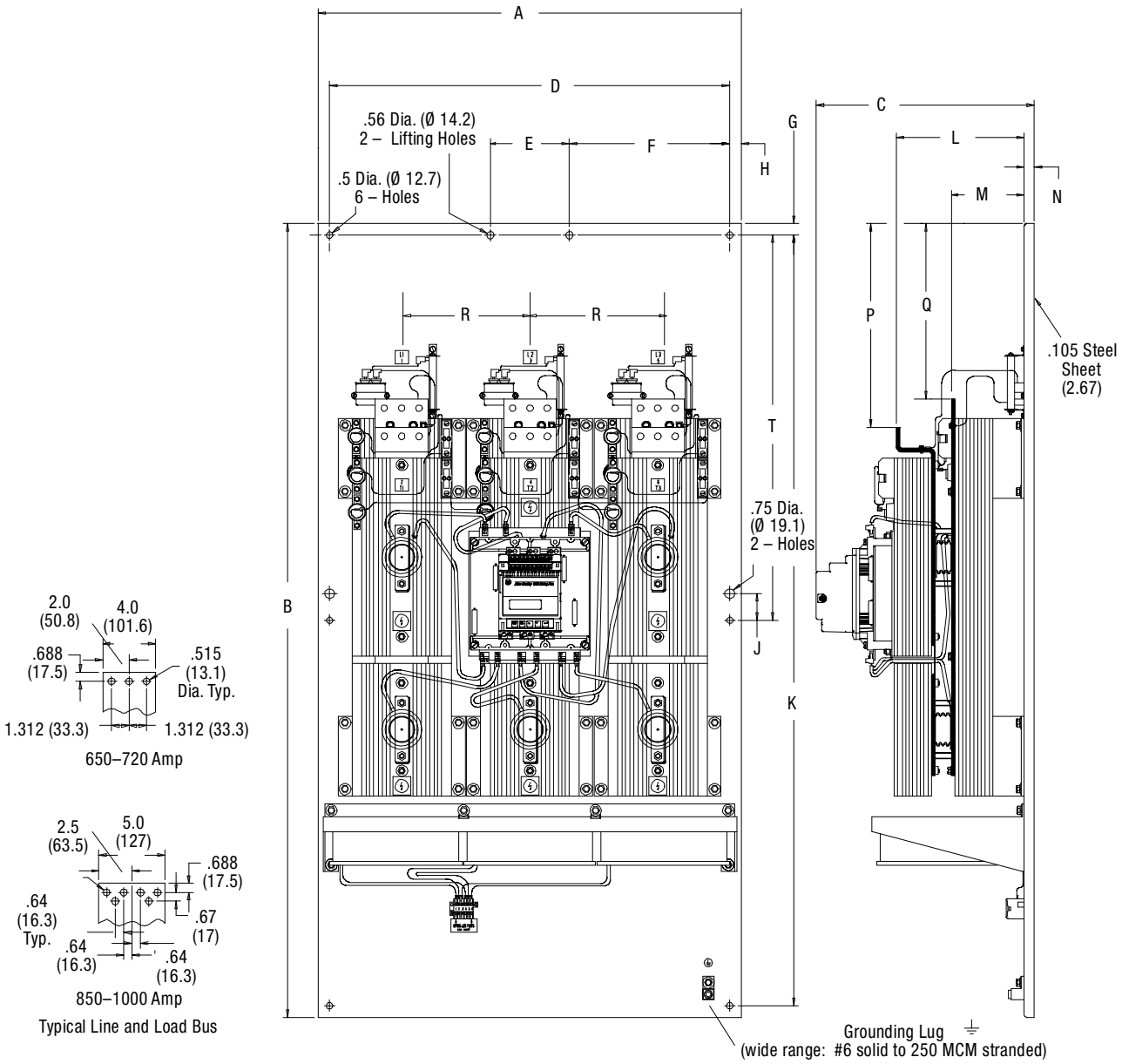

	Unit	A Width	B Height	C Depth	D	E	F	G	H	J	K	L	M	N	P	Q	R
650 and 720A Controller	mm	32.0	60.0	15.83	30.25	6.0	12.13	.875	.875	2.0	58.25	9.935	5.475	.75	329	317.5	246.1
	in.	812.8	1524.0	402.1	768.35	152.4	308.0	22.22	22.23	50.8	1479.55	252.35	139.06	19.05	13	12.5	9.69
850 and 1000A Controller	mm	32.0	60.0	15.83	30.25	6.0	12.13	.875	.875	2.0	58.25	9.935	5.475	.75	383	375	246.1
	in.	812.8	1524.0	402.1	768.35	152.4	308.0	22.22	22.23	50.8	1479.55	252.35	139.06	19.05	15	14.75	9.69

All dimensions are approximate and are not intended for manufacturing purposes. Refer to the nearest Allen-BradleyAllen-Bradley sales office for complete dimension drawings.

Power Factor Correction Capacitors

The controller can be installed on a system with power factor correction (PFC) capacitors. The capacitors **must** be located on the line side of the controller. This must be done to prevent damage to the SCRs in the SMC Dialog Plus controller.

When discharged, a capacitor essentially has zero impedance. For switching, sufficient impedance should be connected in series with the capacitor bank to limit the inrush current. One method for limiting the surge current is to add inductance in the capacitor's conductors. This can be accomplished by creating turns or coils in the power connections to the capacitors.

- 250V – 6 inch diameter coil, 6 loops
- 480–600V – 6 inch diameter coil, 8 loops

Take care in mounting the coils so that they are not stacked directly on top of each other; stacking will cause a canceling effect. Also, mount the coils on insulated supports away from metal parts so they will not act as induction heaters. If an isolation contactor is used, put capacitors in front of contactor.

Note: For further instructions, consult the PFC capacitor vendor.

Figure 2.6 Typical Wiring Diagram for Power Factor Correction Capacitors

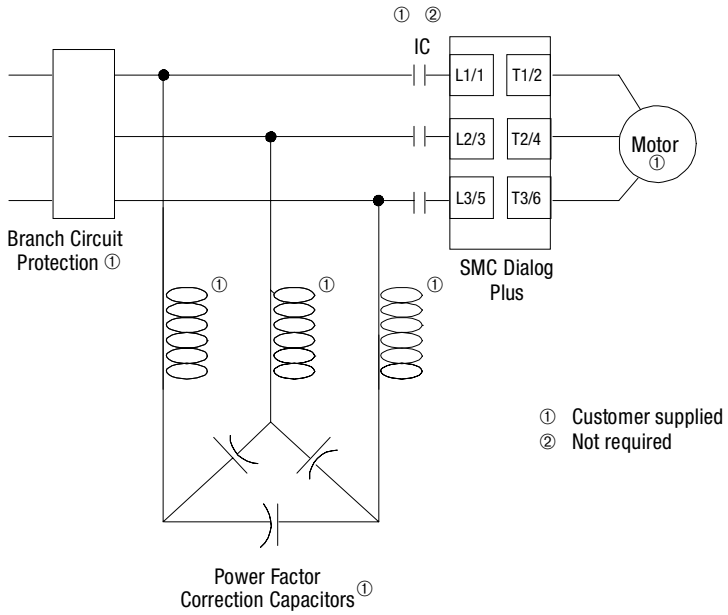

Fast Acting Current-limiting Fuses

Short-circuit protection guidelines are provided in Appendix A of this manual. Enhanced SCR protection may be obtained with the use of fast acting current-limiting fuses. Table 2.C provides a listing of fuses that are coordinated to protect the controller SCRs in the event of a ground fault or short-circuit at the connected load. If SCR fusing is not used, the controller power modules may be damaged and require replacement. Supplementary SCR fusing, however, is not required by the NFPA 70 (National Electric Code).

Table 2.C Recommended Fuses

SMC Rating	Fuse Manufacturer Cat. No. ①				
	Bussman	Shawmut	Edison (Brush)	Ferraz	Littlefuse
24A	SPP-4F60 170M 3610-63	A70P70	XL70F080	A070F060	L70S60
35A	SPP-4F100 170M 3612-100	A70P100	XL70F125	A070F100	L70S100
54A	SPP-4F150 170M 3614-160	A70P200	XL70F200	A070F150	L70S150
97A	SPP-4F300 170M 3617-315	A70P300	XL70F300	A070F300	L70S300
135A	SPP-4F300 170M 3617-315	A70P300	XL70F300	A070F300	L70S300
180A	SPP-4F400 170M 3619-400	A70P400	XL70F400	A070F400	L70S400
240A	SPP-6F400 170M 5608-400	A70P500	XL70F500	A070F400	L70S400
360A	SPP-6F600 170M 5612-630	A70P800	XL70F600	A070F800	L70S600
500A	SPP-6F800 170M 6613-900	A70P1000	XL70F500 ②	A070F800	L70S800
650A	SPP-6F800 170M 6613-900	A70P1000	XL70F500 ②	A070F800	L70S500
720A	SPP-5F600 ② 170M 5612-630 ②	A70P1200	XL70F600 ②	A070F800	L70S500
850A	SPP-7F1200 170M 6615-1100	A70P1000 ②	—	A070F1200	L70S800
1000A	SPP-6F800 ② 170M 6613-900 ②	A70P1000 ②	—	A070F1200	L70S800

Note: Fuse size listed is for 230V, 460V, or 575V.

① Fuse manufacturer's cross reference of the fuse Cat. Nos. listed here may not provide proper coordination.

② Two fuses per phase are required for these controller ratings.

ATTENTION: The fast acting current-limiting fuses specified in Table 2.C may not provide branch circuit protection. Branch circuit protection in accordance with applicable electrical codes may require additional fusing (or a circuit breaker) even though fast acting current-limiting fuses are used.

ATTENTION: Applications requiring extended acceleration times or high duty cycles may experience nuisance tripping of the coordinated fast acting current-limiting fuses. This type of fuse has a limited thermal capacity that is less than that of the SCRs they are designed to protect. This makes them susceptible to thermal fatigue.

Protective Modules

Protective modules containing metal oxide varistors (MOVs) and capacitors can be installed on controllers rated 24A to 360A to protect the power components from electrical transients and/or high electrical noise. The protective modules clip voltage transients generated on the lines to prevent such surges from damaging the SCRs. The capacitors in the protective modules are used to shunt noise energy away from the controller electronics. Surge protection is provided as standard for controllers rated 500–1000A.

ATTENTION: When installing or inspecting the protective module, make sure that the controller has been disconnected from the power source. The protective module should be inspected periodically for damage or discoloration. Replace if necessary.

Motor Overload Protection

Thermal motor overload protection is provided as standard (though it must be programmed) with the SMC Dialog Plus controller. If the overload trip class is less than the acceleration time of the motor, nuisance tripping may occur.

ATTENTION: Overload protection should be properly coordinated with the motor.

Three special applications require consideration: bypass, two-speed motors, and multi-motor protection.

Bypass

In a bypass configuration, the SMC Dialog Plus controller loses current sensing capability. It is recommended that a Bulletin 825 converter module be used to provide current feedback to the SMC Dialog Plus controller for these applications to maintain the thermal memory and to maintain the SMC Dialog Plus controller's power monitoring capability. It is possible, however, to use a traditional electromechanical overload relay for bypass configurations.

Two-speed Motors

The SMC Dialog Plus controller has overload protection available for single speed motors. When the SMC Dialog Plus controller is applied to a two-speed motor, the Overload Class parameter must be programmed to OFF and separate overload relays must be provided for each speed.

Multi-motor Protection

If the SMC Dialog Plus controller is controlling more than one motor, individual overload protection is required for each motor.

Human Interface Module

The Bulletin 1201 human interface modules may be used to program and control the SMC Dialog Plus controller. The human interface modules have two sections: a display panel and a control panel. The display panel duplicates the 2-line, 16-character backlit LCD display and programming keypad found on front of the SMC Dialog Plus controller. Refer to Chapter 4 for a description of the programming keys; refer to Appendix D for a listing of human interface module catalog numbers that are compatible with the controller.

The control panel provides the operator interface to the controller.

Start
The green start button, when pressed, will begin motor operation.

Stop
The red stop button, when pressed, will halt motor operation.

Jog
The jog button is active only when a control option is present. Pressing the jog button will initiate the option maneuver (for example: Pump Stop).

ATTENTION: The Bulletin 1201 human interface module's stop push button is not intended to be used as an emergency stop. Refer to the applicable standards for emergency stop requirements.

All other controls available with the various human interface modules are non-functional with the SMC Dialog Plus controller.

Connecting the Human Interface Module to the Controller

Figure 2.7 shows the connection of the SMC Dialog Plus controller to a human interface module. See Figure 3.14 on page 3-10 for the control wiring diagram that enables start-stop control from a human interface module.

Figure 2.7 SMC Dialog Plus Controller with Human Interface Module

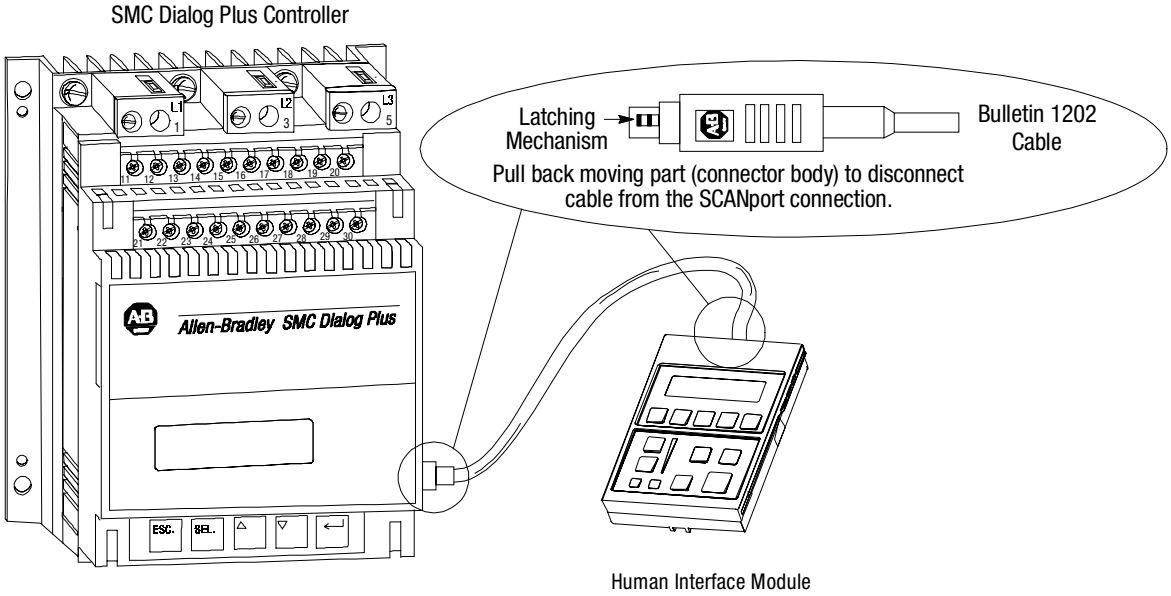

Control Enable

To enable motor control from a connected human interface module, follow the procedure below with the connected human interface module's programming keys.

Note: Series A and Series B human interface modules require different procedures. Be sure to use the correct table.

Human Interface Module (cont.)

Series A Human Interface Modules

Description	Action	Display
—	—	STOPPED 0.0 AMPS
1. Press any key to access the Choose Mode function.	ESC SEL ▲ ▼ ↵	CHOOSE MODE _ _ _ _ _
2. Scroll with the Up/Down keys until the Program option appears.	▲ *or* ▼	CHOOSE MODE PROGRAM
3. Press the Enter key to access the Program option.	↵	PROGRAM _ _ _ _ _
4. Scroll with the Up/Down keys to the Linear List option.	▲ *or* ▼	PROGRAM LINEAR LIST
5. Press the Enter key to access the Linear List programming group.	↵	VOLTS PHASE A-B 0 VOLTS 1
6. Scroll with the Up/Down keys to parameter number 85 – Logic Mask.	▲ *or* ▼	LOGIC MASK 0 85
7. Press the Select key to move the cursor to the second line to modify the parameter.①	SEL	LOGIC MASK 0 85
8. Press the Up key until the value 4 appears.	▲	LOGIC MASK 4 85
9. Press the Enter key to accept the new setting.	↵	LOGIC MASK 4 85

① Zero and 4 are the only valid settings.

Note: If a human interface module is disconnected from the SMC Dialog Plus controller while the Logic Mask is set to 4, a “Comm Fault” will occur.

Series B Human Interface Modules

Description	Action	Display
—	—	STOPPED 0.0 AMPS
1. Press any key to access the Choose Mode function.	ESC SEL ▲ ▼ ↵	CHOOSE MODE _ _ _ _ _
2. Scroll with the Up/Down keys until the Control Logic option is presented.	▲ *or* ▼	CHOOSE MODE CONTROL STATUS
3. Press the Enter key to access Control Logic options.	↵	CONTROL LOGIC DISABLE
4. Press the Select key to access the settings available.	SEL	CONTROL LOGIC DISABLE
5. Use the Up/Down keys to obtain the Enable option.	▲ *or* ▼	CONTROL LOGIC ENABLE
6. Press the Enter key to accept.	↵	CONTROL LOGIC ENABLE

Note: If a human interface module is disconnected from the SMC Dialog Plus controller while Control Logic is enabled, a “Comm Fault” will occur.

Communication Modules

The Bulletin 1203 communication module allows the user to connect the SMC Dialog Plus controller to various networks and communication protocols. The figure below shows how the controller and the communication module connect.

Figure 2.8 SMC Dialog Plus Controller with Communication Module

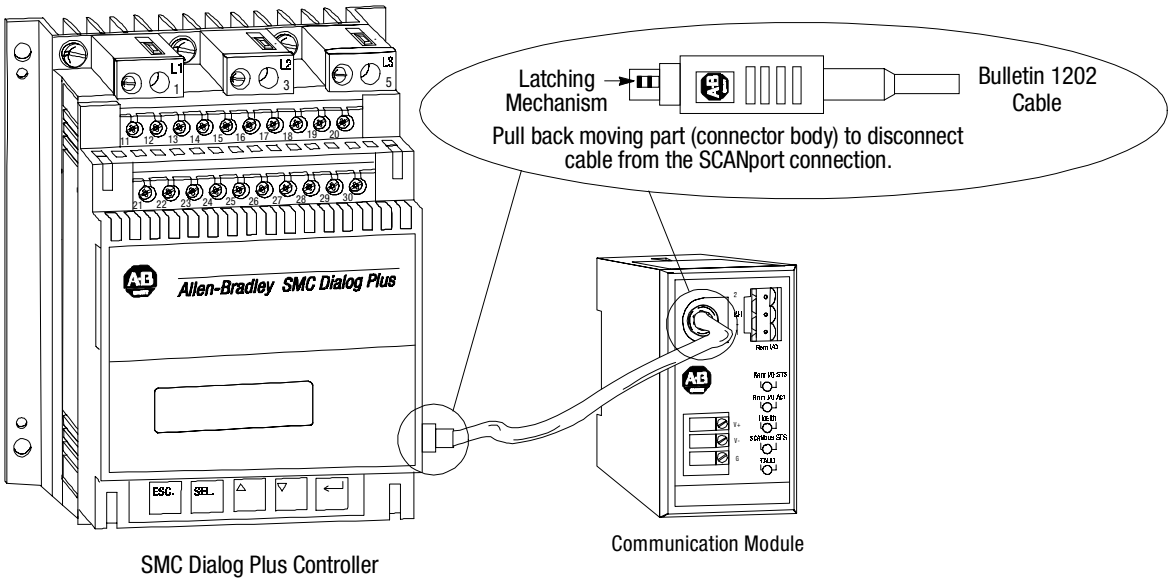

Converter Modules

The Bulletin 825 converter module provides three-phase current feedback to the SMC Dialog Plus controller for metering and overload protection during phase rebalance and bypass operation.

Select the converter module based on the motor full load current (FLC) rating. Table 2.A details the information for proper selection.

Table 2.A Converter Module Selection Guide

Motor FLC Range	Cat. No.
1–12.5A	825-MCM20
9–100A	825-MCM180
64–360A	825-MCM630

Figure 2.9 shows the connection between the controller and the module.

Figure 2.9 Converter Module Connection Interface

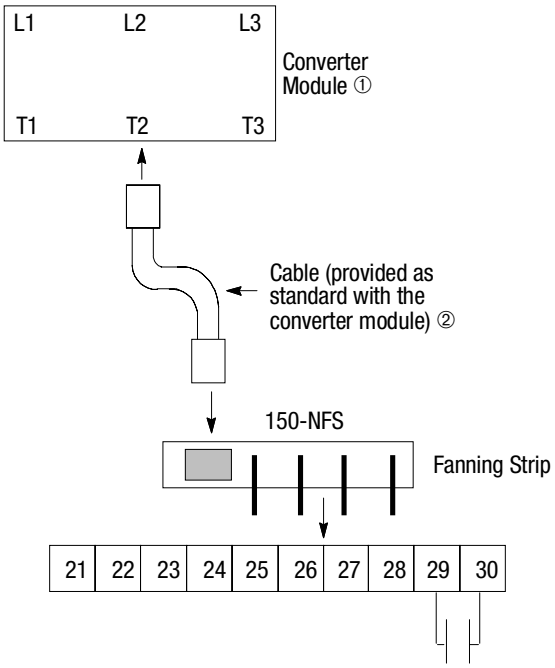

① The converter module rating must be programmed in the calibration group for proper current measurement scaling.

② Cable length is three meters. Only the cable provided with the converter module is compatible with the SMC Dialog Plus controller. Use of any other cable may result in faulty controller operation.

Converter Modules (cont.)

For applications in which the motor's full load current rating is greater than 360A, three additional current transformers with 5A secondaries are required. The figure below illustrates the connection of the current transformers to the converter module.

Figure 2.10 Current Transformer Connection to Converter Module

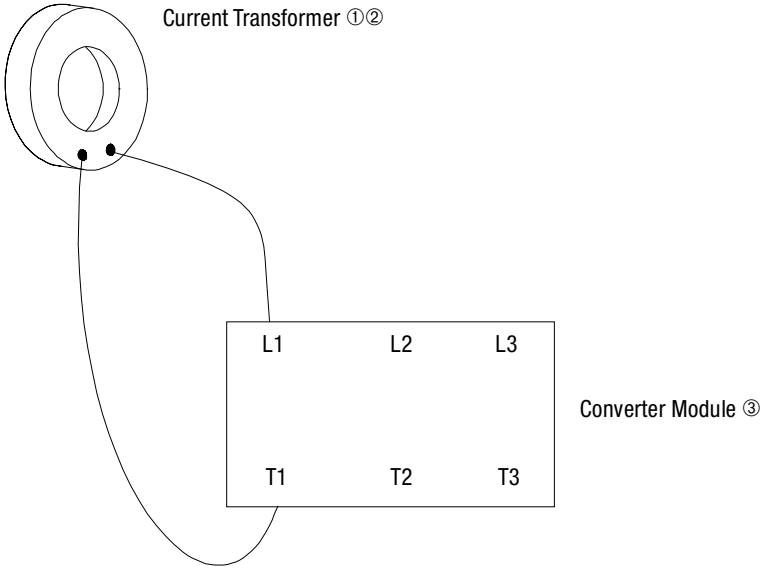

① The current transformer (CT) ration must be programmed in the calibration group for proper current measurement scaling. See page 5-2 for instructions on programming this parameter.

② Another current transformer connects L2 and T2, and another connects L3 and T3.

③ The converter module, Cat No. 825-MCM20, must be used in these applications.

Electromagnetic Compatibility (EMC)

ATTENTION: This product has been designed for Class A equipment. Use of the product in domestic environments may cause radio interference, in which case, the installer may need to employ additional mitigation methods.

The following guidelines are provided for EMC installation compliance.

Enclosure

Install the product in a grounded metal enclosure.

Grounding

Connect a grounding conductor to the screw or terminal provided as standard on each controller. Refer to Figure 2.1 through Figure 2.5 for grounding provision location.

Wiring

Wire in an industrial control application can be divided into three groups: power, control, and signal. The following recommendations for physical separation between these groups is provided to reduce the coupling effect.

- Different wire groups should cross at 90° inside an enclosure.
- Minimum spacing between different wire groups in the same tray should be six inches (16 cm).
- Wire runs outside an enclosure should be run in conduit or have shielding/armor with equivalent attenuation.
- Different wire groups should be run in separate conduits.
- Minimum spacing between conduits containing different wire groups should be three inches (8 cm).

Accessory Requirements

When connection of the Bulletin 825 converter module or Bulletin 1202 communication cable is required, a ferrite core suppressor (Fair-Rite PN 2643802702 or equal) should be used in conjunction. Mount the suppressor as close to the controller as practical, wrapping the cable twice through the suppressor.

Wiring

Terminal Locations

The SMC Dialog Plus controller wiring terminal locations are shown in Figure 3.1 through Figure 3.4. Make wiring connections as indicated in the typical connection diagrams. Connect the line to terminals L1/1, L2/3, and L3/5. Connect the load to terminals T1/2, T2/4, and T3/6. For controllers rated 24–135A, a grounding screw is provided to ground the heatsink per applicable codes. For controllers rated 180A–1000A, a grounding lug is provided on the mounting plate.

Figure 3.1 Wiring Terminal Locations (24 to 54 Amp)

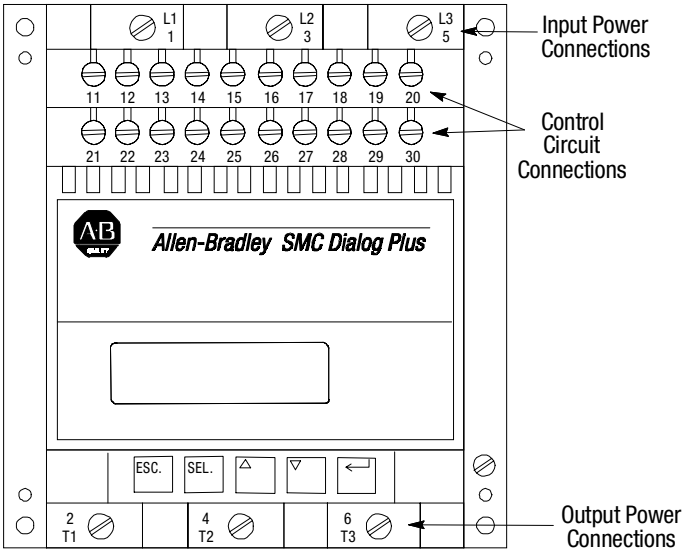

Figure 3.2 Wiring Terminal Locations (97 and 135 Amp)

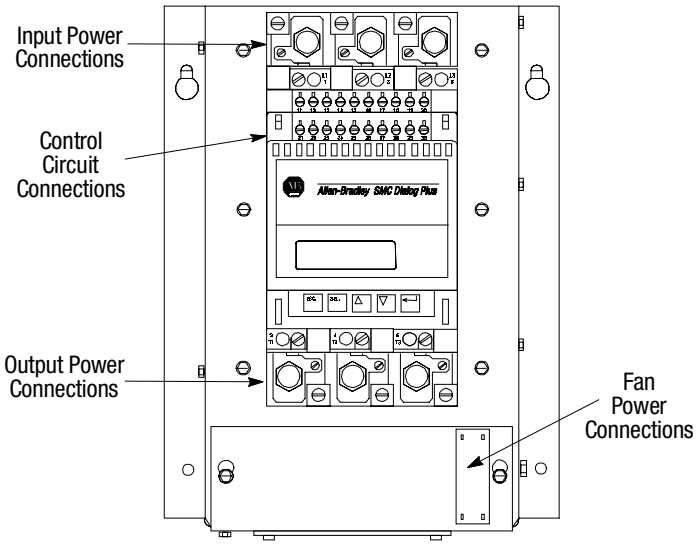

Terminal Locations (cont.)

Figure 3.3 Wiring Terminal Locations (180 to 360 Amp)

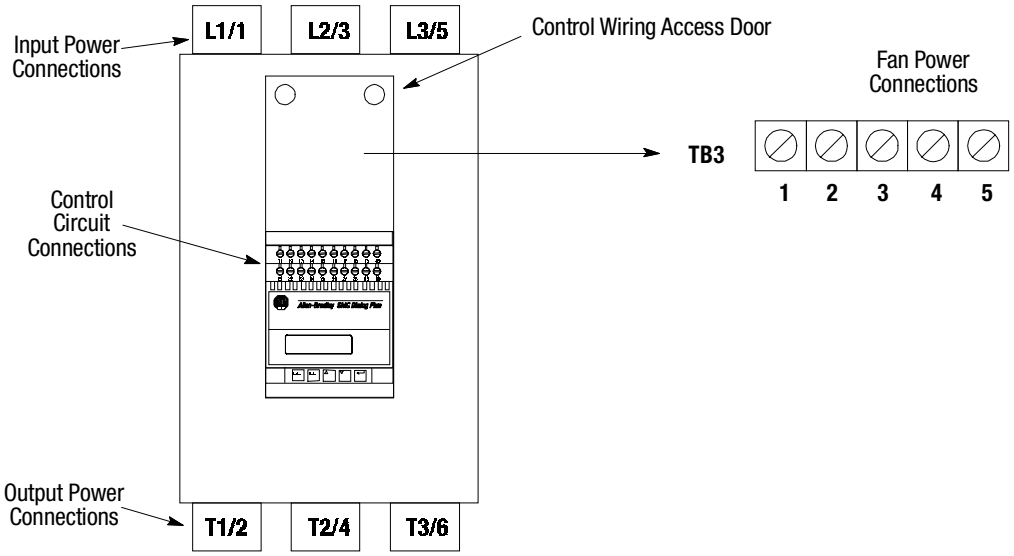

Figure 3.4 Wiring Terminal Locations (500 Amp)

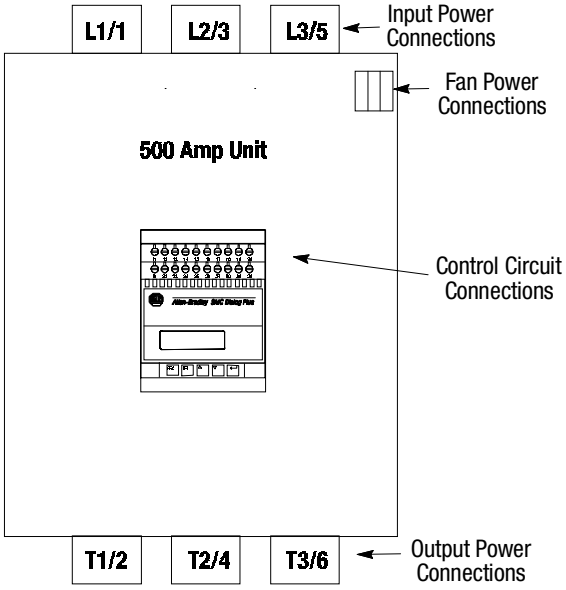

Figure 3.5 Wiring Terminal Locations (650 to 1000 Amp)

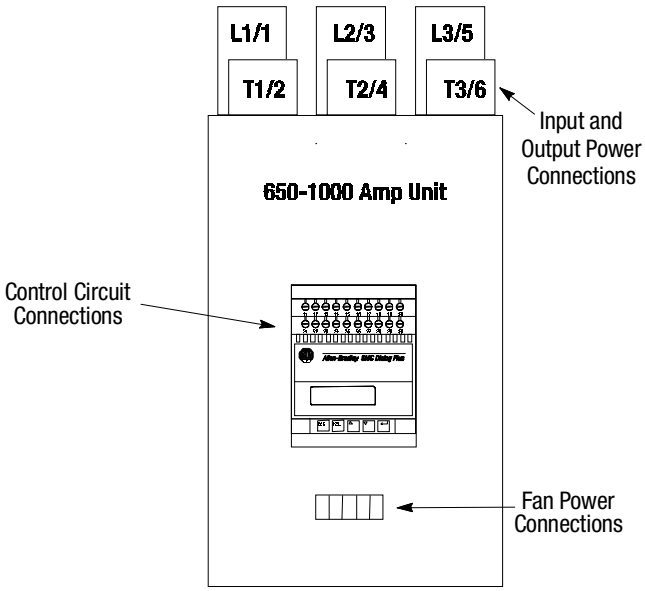

Power Wiring

24–54A

The power modules for controllers rated 24A–54A have internal mechanical-type lugs to accept line and load cables. Table 3.A and Table 3.B provide the lug wire capacity and tightening torque requirements.

Table 3.A Lug Wire Capacity

Metric	AWG
2.5–25 mm^2	#14–#4

Table 3.B Tightening Torque

Tightening Torque			
Wire Size	2.5–6 mm^2 (14–10 AWG)	10 mm^2 (8 AWG)	16–25 mm^2 (6–4 AWG)
Torque	2.80 N-m (25 Lb-in)	3.4 N-m (30 Lb-in)	3.95 N-m (35 Lb-in)

97–1000A

Power lugs are available as optional kits. Each kit contains three lugs. The number of terminal lug kits required is listed in the table below. Table 3.C also provides the lug wire capacity and the tightening torque requirements.

Terminal Locations (cont.)

Table 3.C Lug Wire Capacity and Tightening Torque

SMC Rating	Lug Kit Cat. No.	Conductor Range	Max. No. Lugs/Pole		Tightening Torque	
			Line Side	Load Side	Wire – Lug	Lug – Busbar
97–135A	199-LF1	16–120 mm^2 (#6–4/0 AWG)	3	3	31 N-m (275 lb-in)	31 N-m (275 lb-in)
180–360A	199-LF1	16–120 mm^2 (#6–4/0 AWG)	6	6	31 N-m (275 lb-in)	31 N-m (275 lb-in)
500A	199-LG1	25–240 mm^2 (#4–500 AWG)	6	6	42 N-m (375 lb-in)	45 N-m (400 lb-in)
650–720A	199-LG1	50–240 mm^2 (1/0–500 AWG)	9	9	42 N-m (375 lb-in)	45 N-m (400 lb-in)
850–1000A	199-LJ1	50–240 mm^2 [(2) 1/0–500 AWG]	6	6	42 N-m (375 lb-in)	45 N-m (400 lb-in)

Control Power

Control Voltage

Depending upon the catalog number ordered, the SMC Dialog Plus controller will accept a control power input of:

- 100–240V AC, (–15/+10%), 1 phase, 50/60 Hz
- 24V AC, (–15/+10%), 1 phase, 50/60 Hz
- 24V DC, (–20/+10%), 1 phase

Refer to the product nameplate.

Connect control power to the controller at terminals 11 and 12. The control power requirement for the control module is 40 VA. For controllers rated 97A–1000A, control power is also required for the heatsink fans as defined in Table 3.D. Depending on the specific application, additional control circuit transformer VA capacity may be required.

Table 3.D Heatsink Fan Control Power

SMC Rating	Heatsink Fan VA
97–360A	45
500A	145
650–1000A	320

Control Wiring

Table 3.E provides the control terminal wire capacity and the tightening torque requirements. Each control terminal will accept a maximum of two wires.

Table 3.E Control Wiring and Tightening Torque

Wire Size	Torque
0.75–2.5 mm^2 (#18–#14)	.8 N-m (7 lb-in.)

Fan Power

Controllers rated 97A–1000A have heatsink fan(s). Refer to Table 3.D for the control power VA requirements of the heatsink fans.

Fan Terminations

See Figure 3.2 to Figure 3.4 for fan power connection locations.

ATTENTION: The fan jumpers have been factory installed for 110/120 VAC input. Refer to Figure 3.6 through Figure 3.8 for 220/240 VAC fan wiring. Note that 220/240 VAC fan wiring is not available for the 650A–1000A controllers. After wiring for the 97A and 135A controllers is complete, replace control terminal strip cover.

Figure 3.6 97A and 135A Fan Terminations

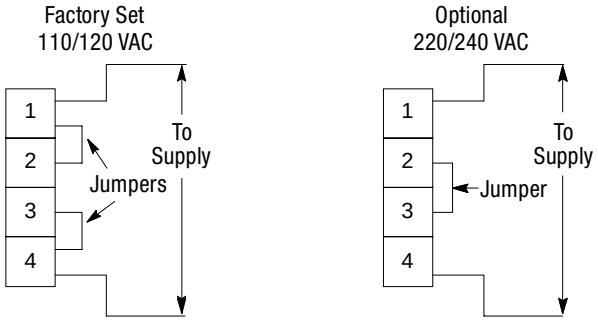

Figure 3.7 180A to 500A Fan Terminations

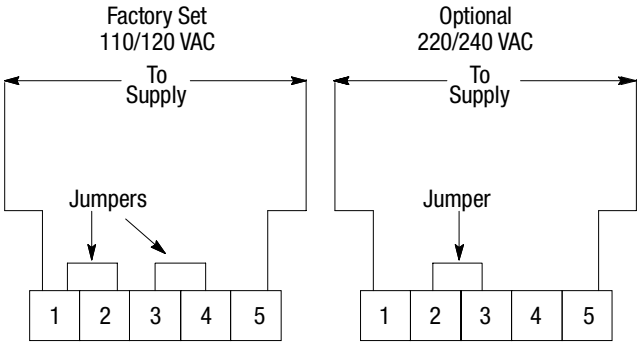

Figure 3.8 650A to 1000A Fan Terminations

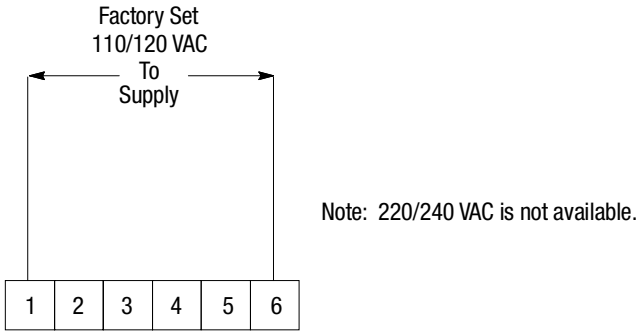

Control Terminal Designations

As shown in Figure 3.9, the SMC Dialog Plus controller contains 20 control terminals on the front of the controller.

Figure 3.9 SMC Dialog Plus Controller Control Terminals

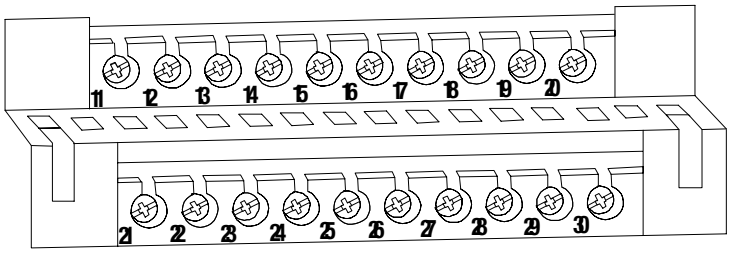

Terminal Number	Description
11	Control Power Input
12	Control Power Common
13	Controller Enable Input ①
14	Logic Ground
15	Dual Ramp/Option Input ①
16	Start Input ①
17	Stop Input ①
18	Auxiliary Relay Common
19	N.O. Auxiliary Contact #1 (Normal/Up-to-speed)
20	N.C. Auxiliary Contact #2 (Normal/Up-to-speed)

Terminal Number	Description
21	Not Used
22	Not Used
23	Not Used
24	Not Used
25	Converter Module Fanning Strip Connection ②
26	Converter Module Fanning Strip Connection ②
27	Converter Module Fanning Strip Connection ②
28	Converter Module Fanning Strip Connection ②
29	N.O./N.C. Auxiliary Contact #3 (Normal/Fault)
30	N.O./N.C. Auxiliary Contact #3 (Normal/Fault)

① Do not connect any additional loads to these terminals. These “parasitic” loads may cause problems with operation, which may result in false starting and stopping.

② When control power is absent from terminals 11 and 12, this contact will be normally open. Upon application of control power, the contact will take the state, normally open or normally closed, as programmed.

Grounding Provision

Provision for connecting a field installed grounding conductor is provided on each controller. It is shown in Figure 3.10 and is located on the heatsink. This symbol is the ground connection identification symbol as defined by IEC Publication 417, Symbol 5019.

If the protective conductor is not connected to the heatsink, the plating and/or paint must be cleaned from the four mounting holes or four star washers (tooth lock washers) must be used.

Figure 3.10 Grounding Provision

Standard Controller Wiring Diagrams

Figure 3.11 through Figure 3.22 show typical wiring for the SMC Dialog Plus controller.

Figure 3.11 Typical Wiring Diagram for Standard Controller

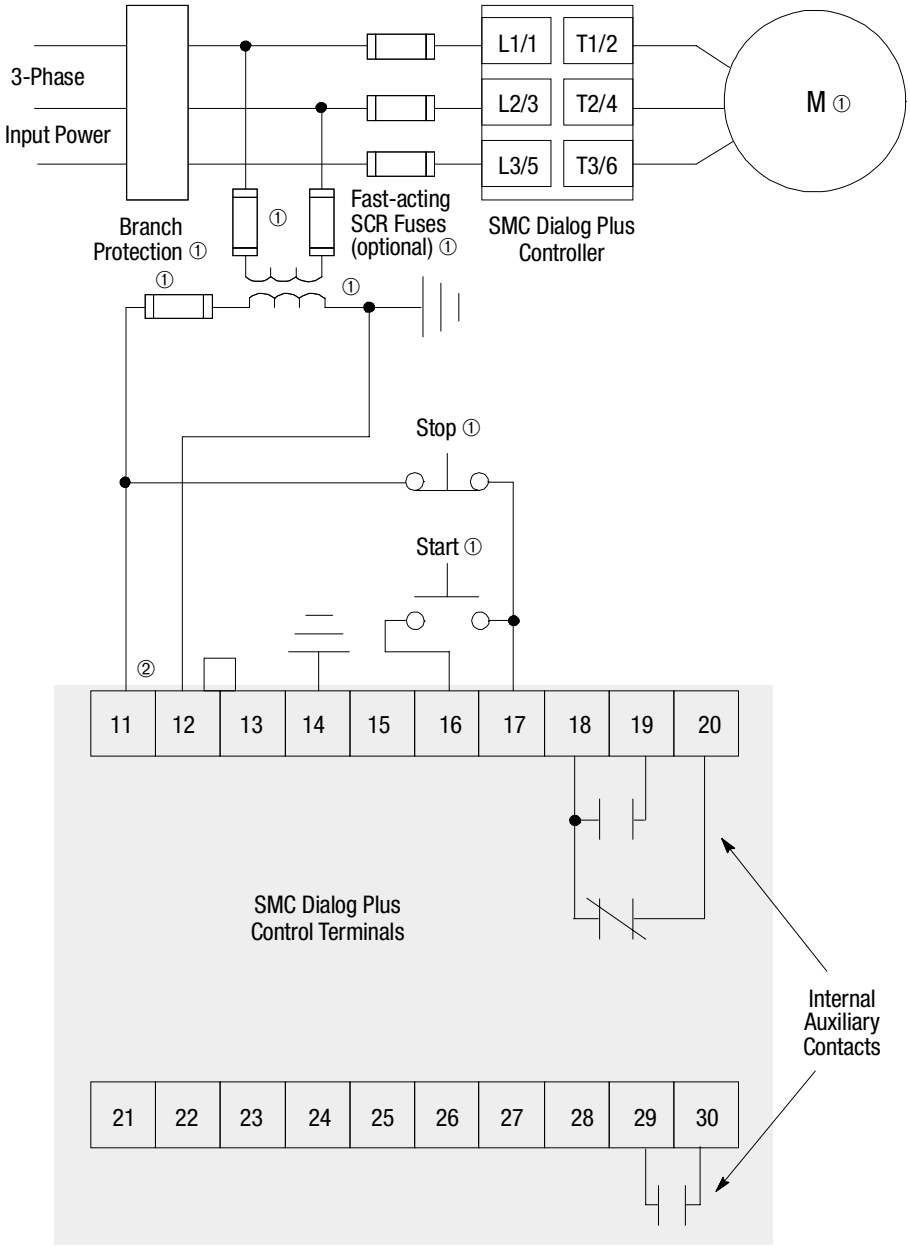

① Customer supplied.

② Refer to the controller nameplate to verify the rating of the control power input voltage.

Standard Controller Wiring Diagrams (cont.)

Figure 3.12 Typical Wiring Diagram for Two-Wire Control or Programmable Control Interfacing

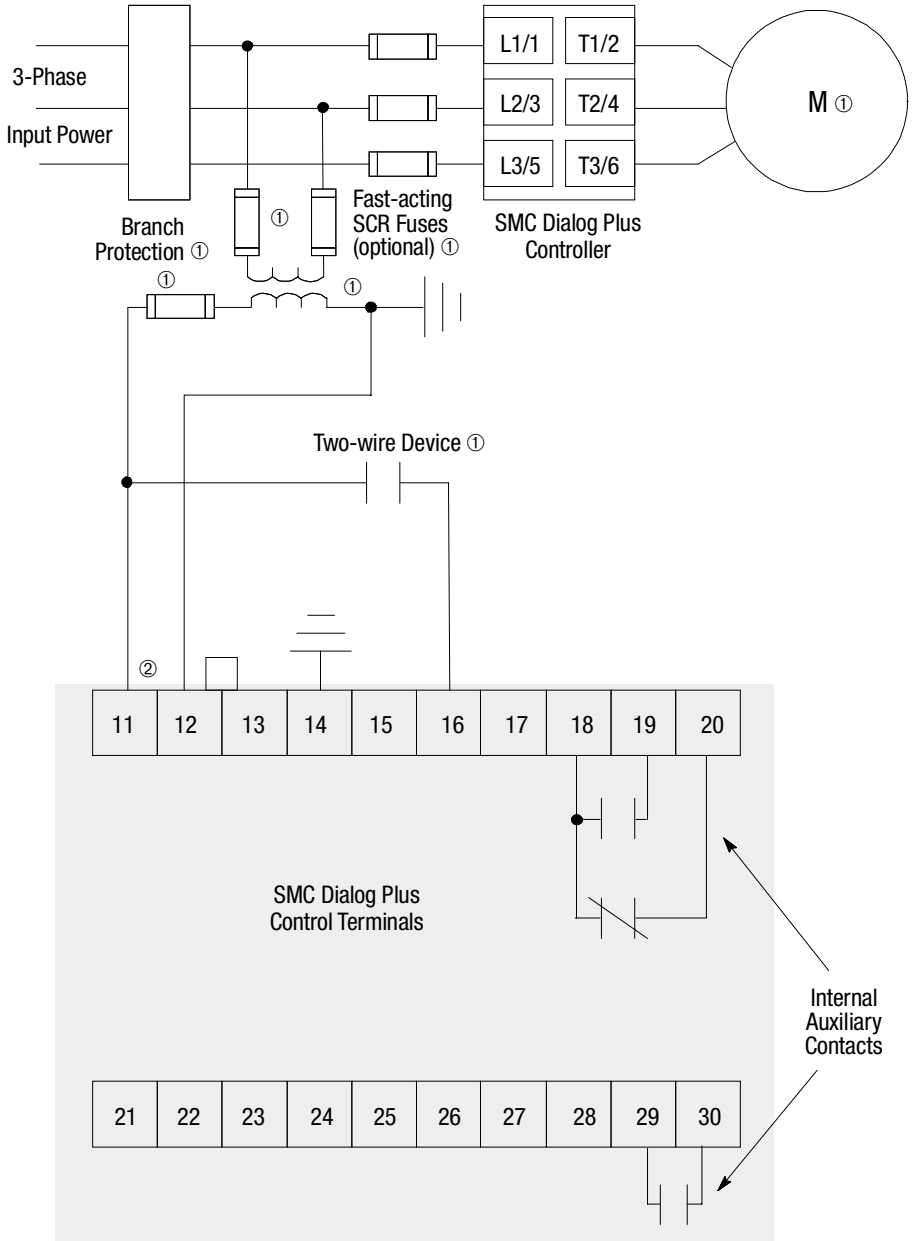

① Customer supplied.

② Refer to the controller nameplate to verify the rating of the control power input voltage.

Notes:
(1) Programmable controller interfacing in this diagram refers to hard-wiring between the PLC's output contacts and the SMC Dialog Plus controller's control terminals. For a wiring diagram related to programmable controller interfacing via the SMC Dialog Plus controller's SCANport, refer to Figure 3.14.
(2) The OFF state leakage current for a solid-state device must be less than 6 mA.

Figure 3.13 Typical Wiring Diagram for Dual Ramp Applications

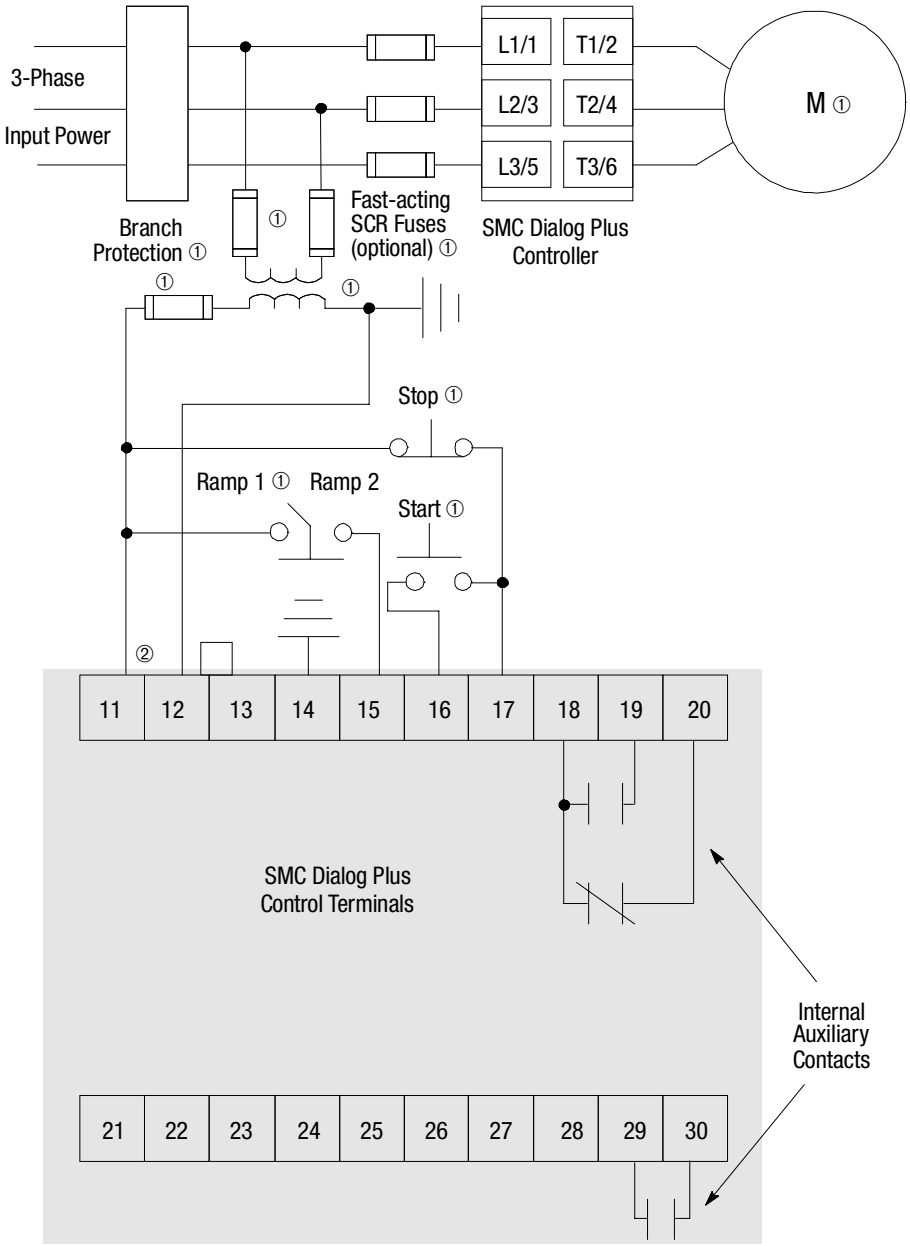

① Customer supplied.

② Refer to the controller nameplate to verify the rating of the control power input voltage.

Note: The Dual Ramp feature is available only with the standard control version.

Standard Controller Wiring Diagrams (cont.)

Figure 3.14 Typical Wiring Diagram for Start-Stop Control via the SCANport

Note: Use this wiring diagram when start-stop will come from either a Bulletin 1201 human interface module or a Bulletin 1203 communication module connected to the SMC Dialog Plus controller's SCANport.

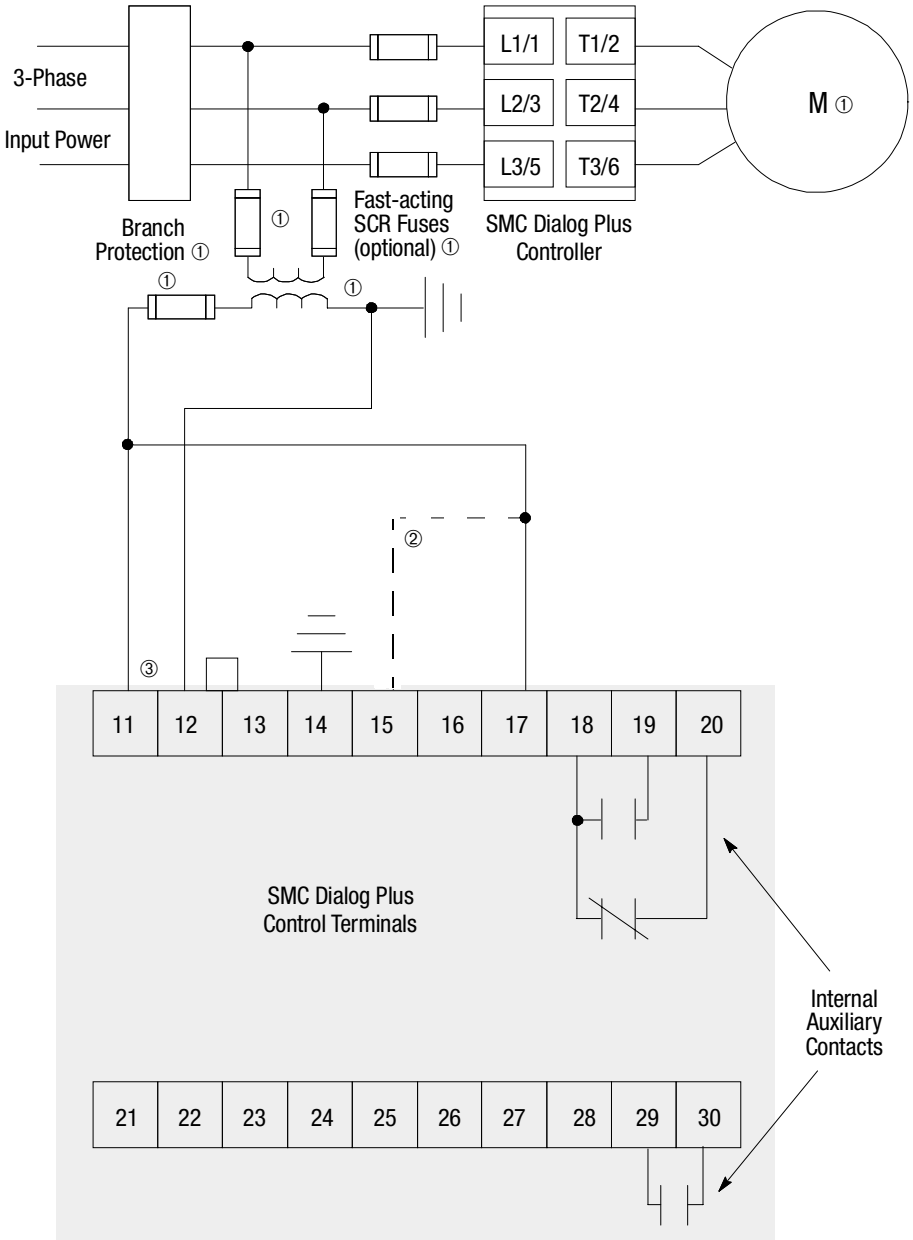

① Customer supplied.

② If the Soft Stop, Pump Control, or the SMB Smart Motor Braking option is installed, place additional jumper to terminal 15.

③ Refer to the controller nameplate to verify the rating of the control power input voltage.

Figure 3.15 Typical Wiring Diagram for Retrofit Applications

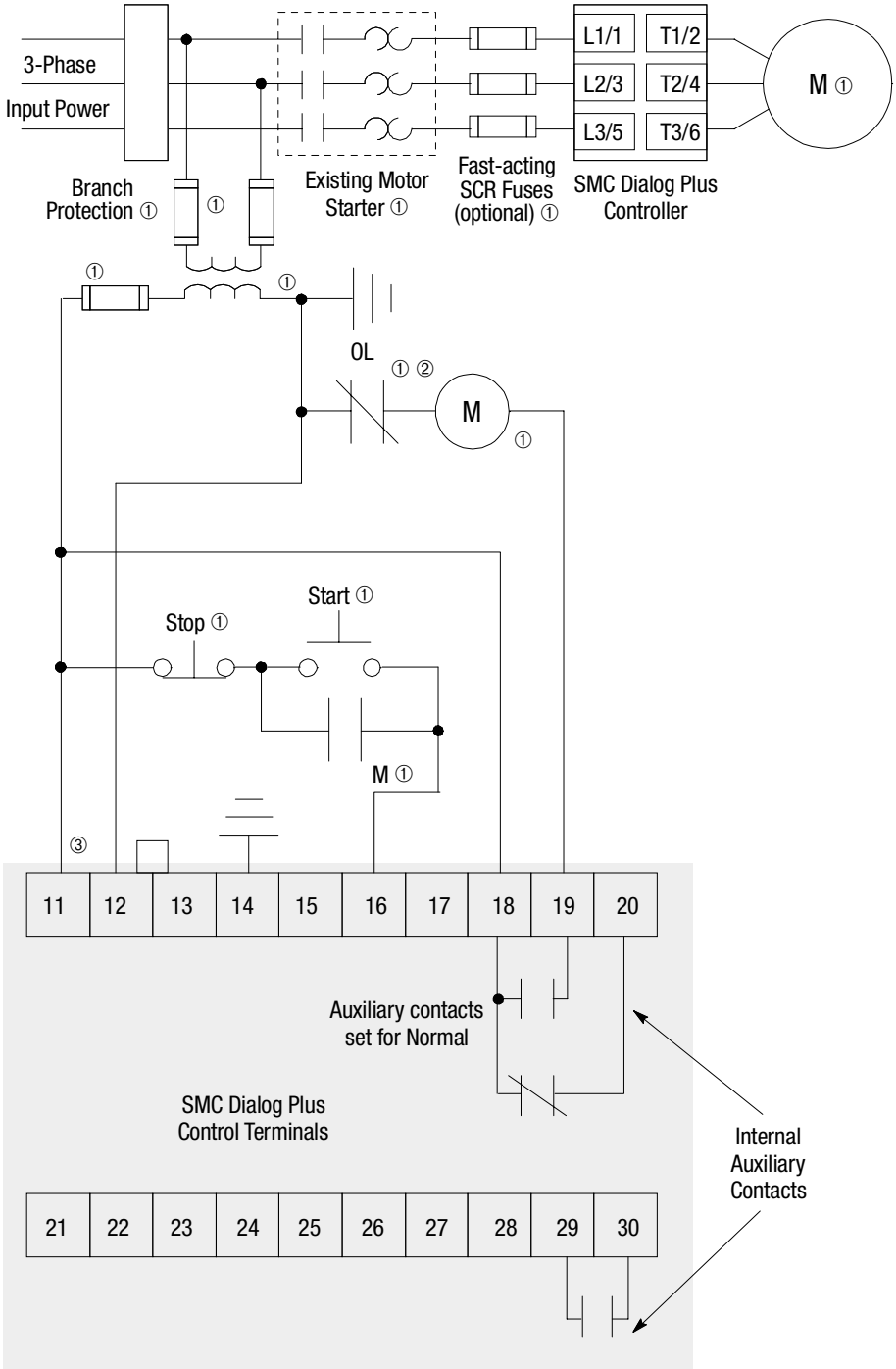

① Customer supplied.

② Overload protection should be disabled in the SMC Dialog Plus controller.

③ Refer to the controller nameplate to verify the rating of the control power input voltage.

Standard Controller Wiring Diagrams (cont.)

Figure 3.16 Typical Wiring Diagram for Isolation Applications

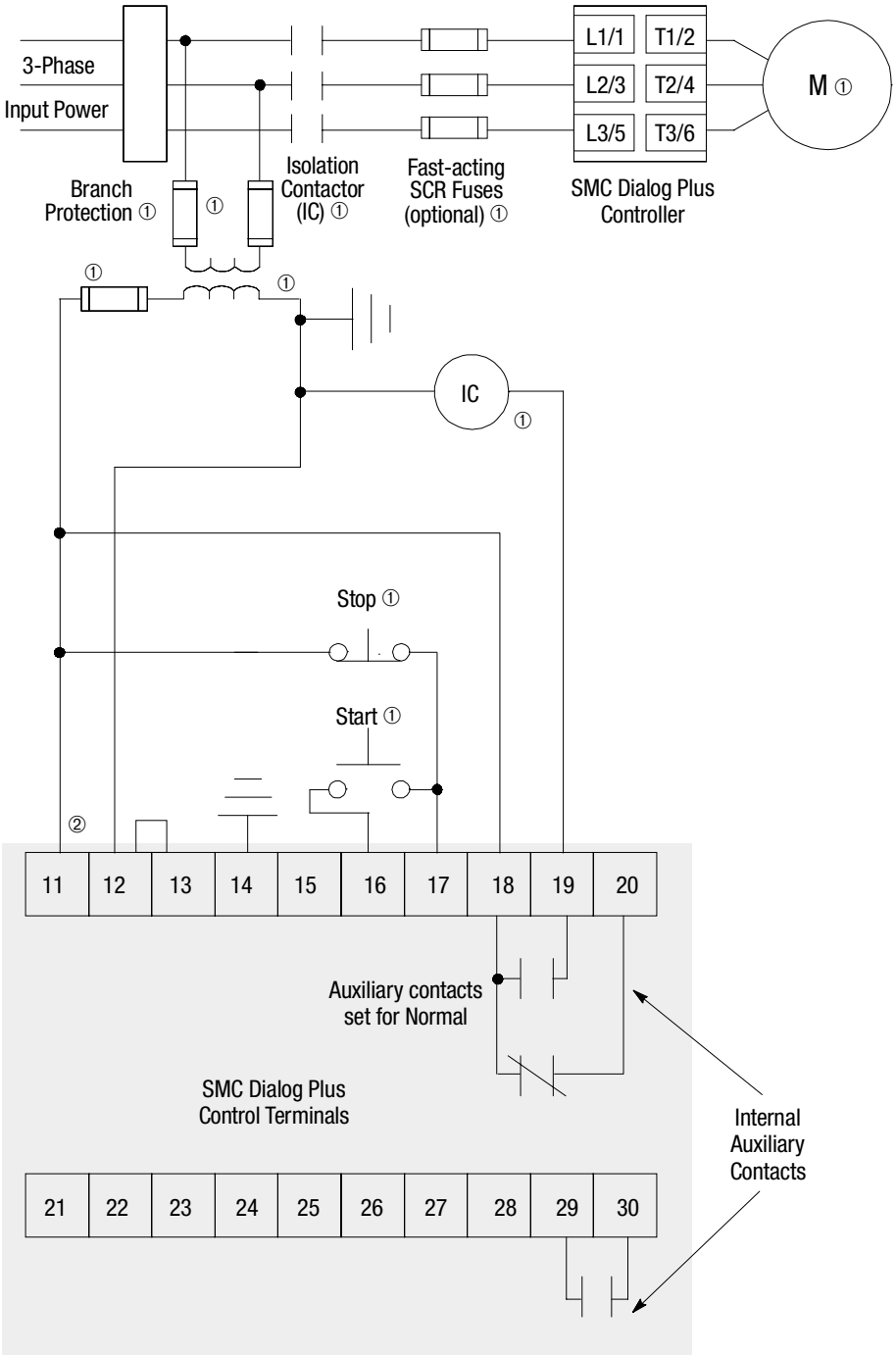

① Customer supplied.

② Refer to the controller nameplate to verify the rating of the control power input voltage.

Figure 3.17 Typical Wiring Diagram for Bypass Applications

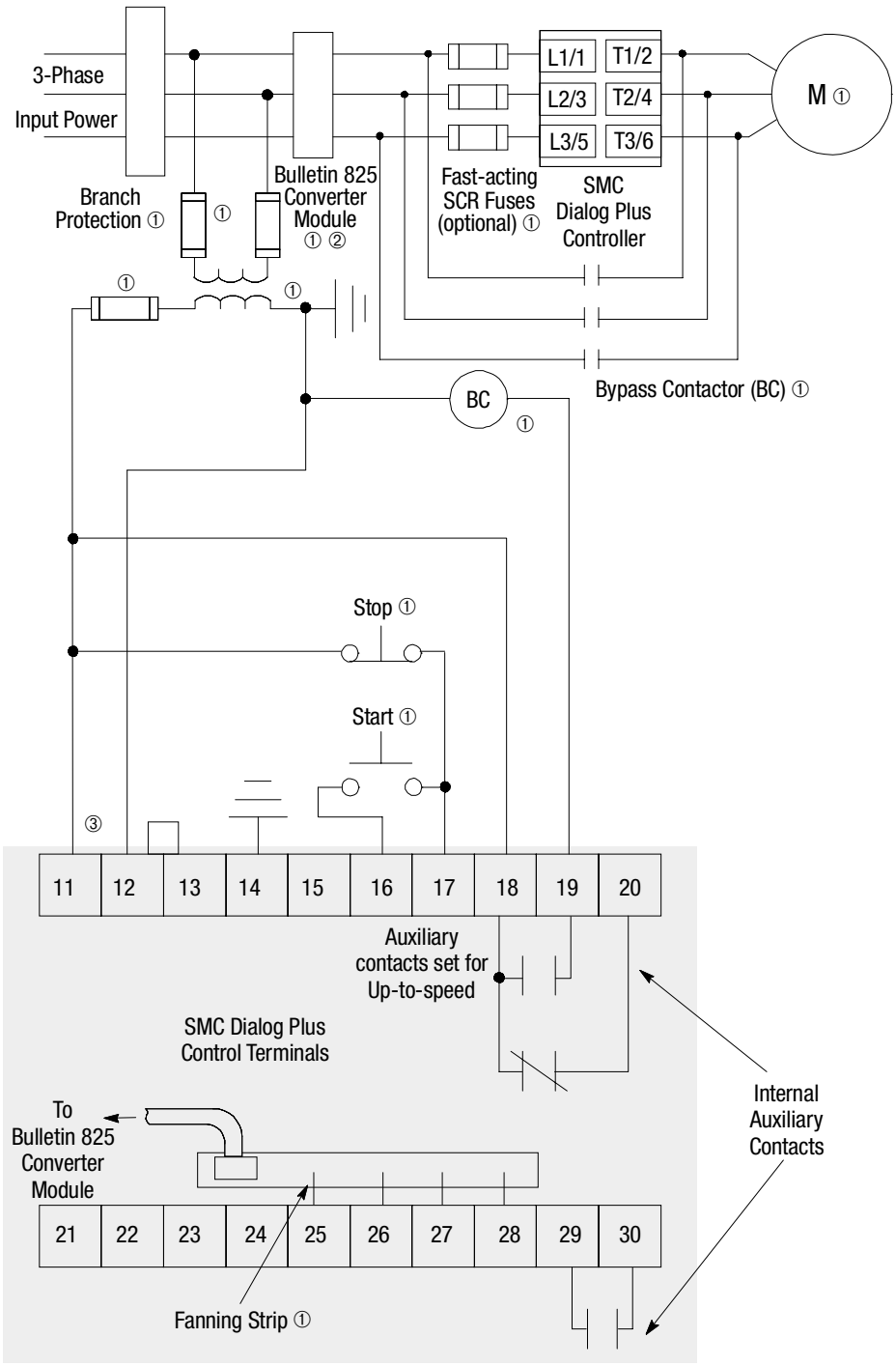

① Customer supplied.

② The Bulletin 825 Converter Module is required when the SMC Dialog Plus controller will be providing motor overload protection during bypass operation.

③ Refer to the controller nameplate to verify the rating of the control power input voltage.

Standard Controller Wiring Diagrams (cont.)

Figure 3.18 Typical Wiring Diagram for Bypass with Isolation Applications

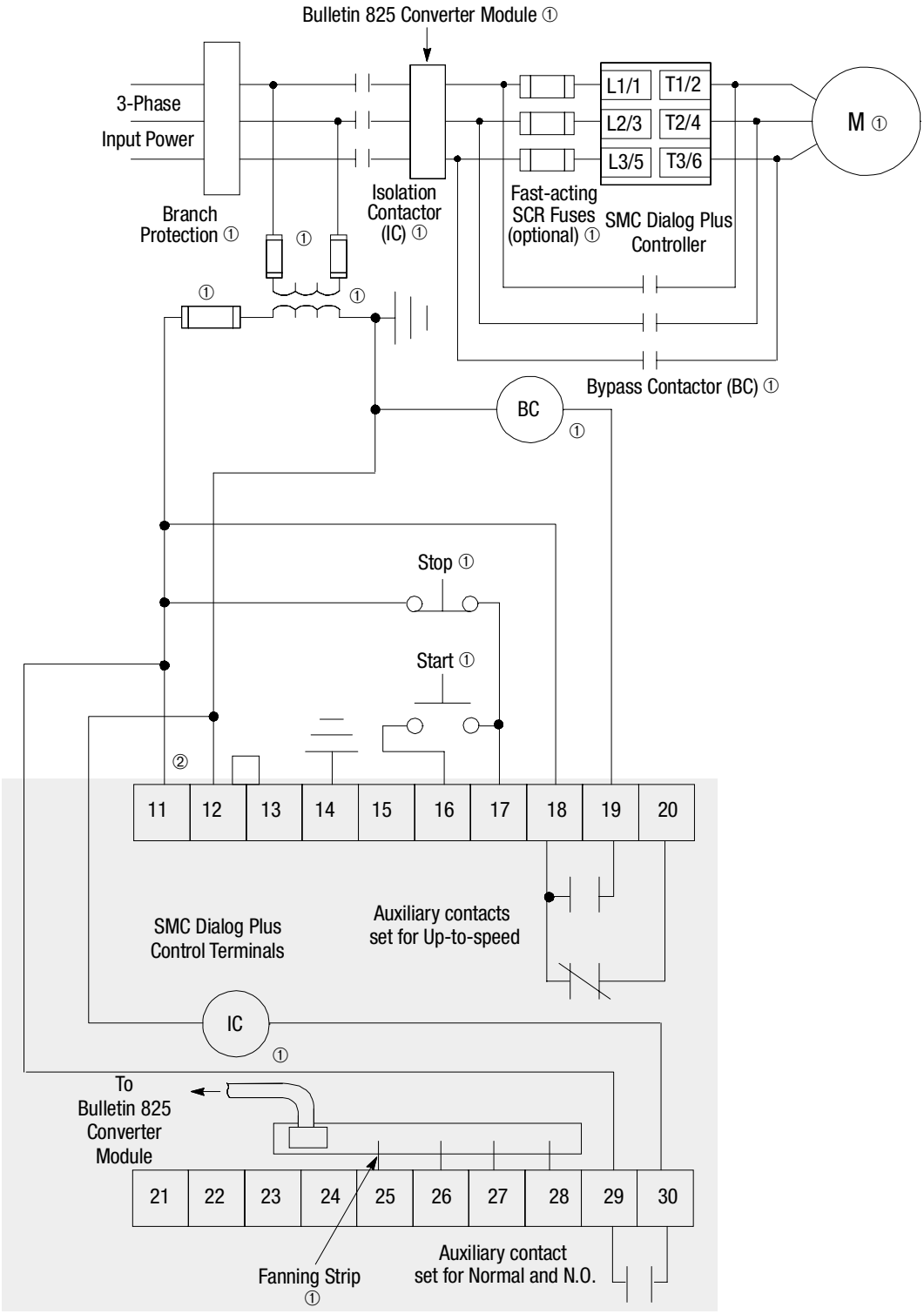

① Customer supplied.

② Refer to the controller nameplate to verify the rating of the control power input voltage.

Figure 3.19 Typical Wiring Diagram for Shunt Trip Applications

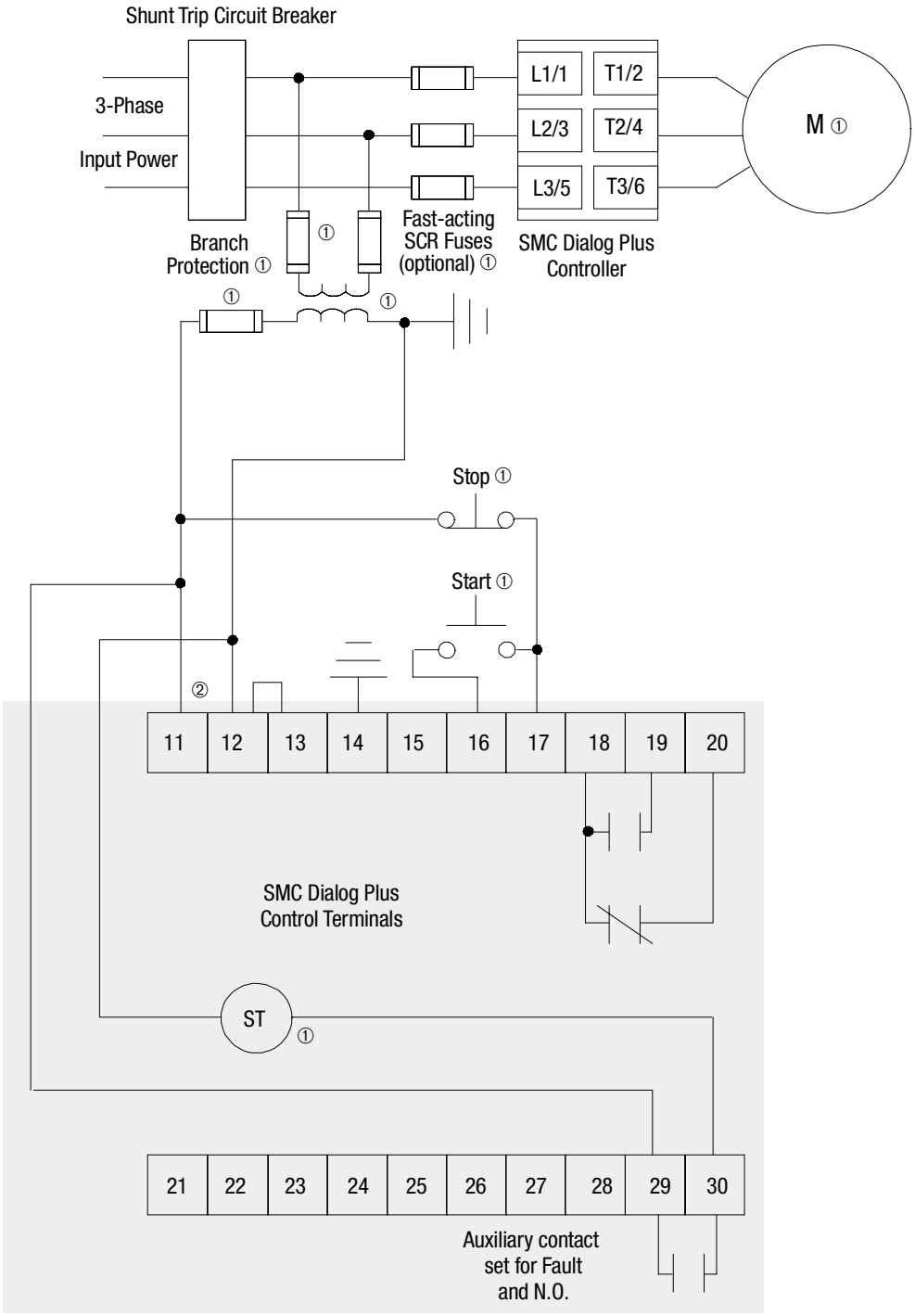

① Customer supplied.

② Refer to the controller nameplate to verify the rating of the control power input voltage.

Standard Controller Wiring Diagrams (cont.)

Figure 3.20 Typical Wiring Diagram for Single Speed Reversing Applications

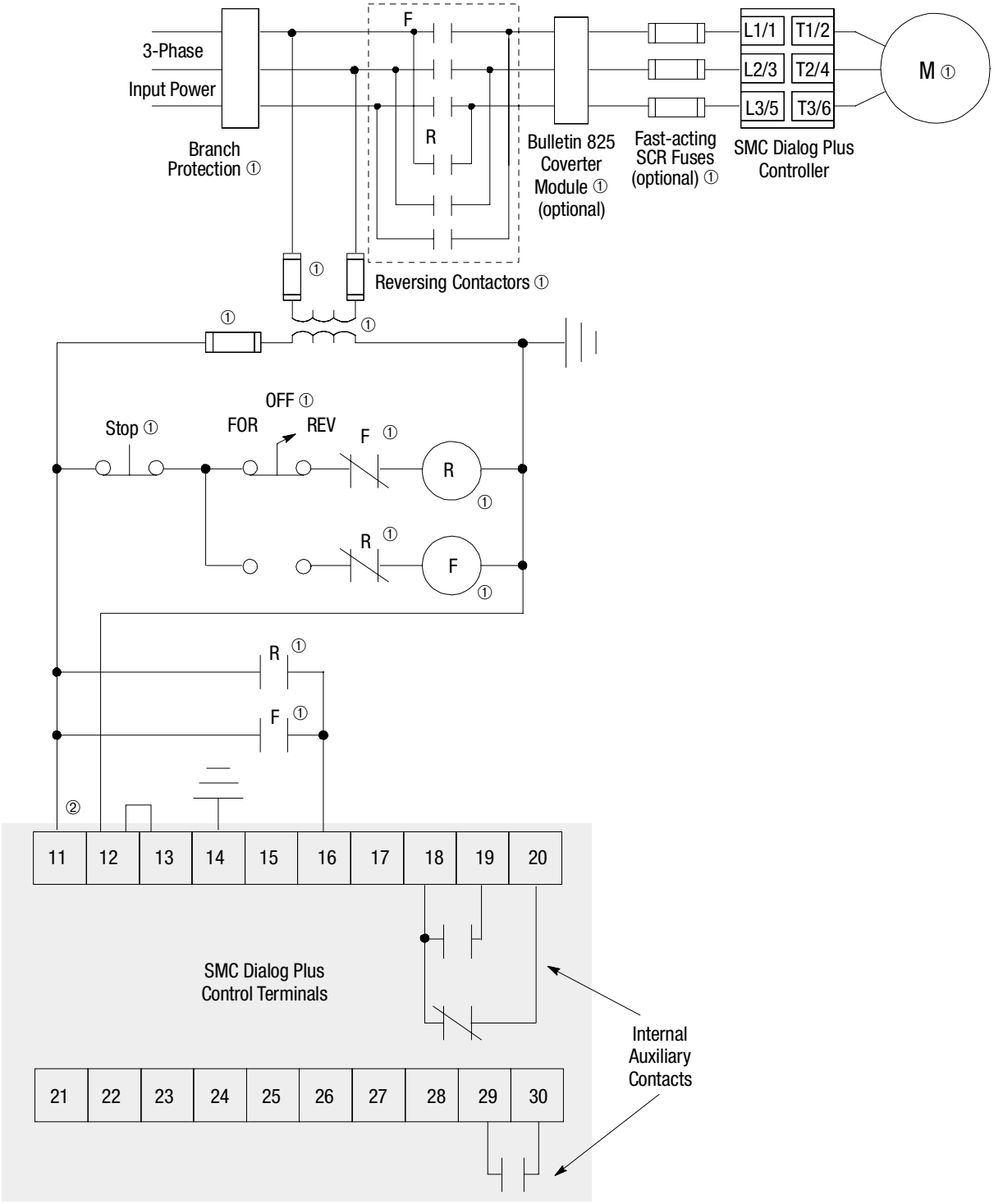

① Customer supplied.

② Refer to the controller nameplate to verify the rating of the control power input rating.

Notes: (1) Minimum transition time for reversing direction is 1/2 second.
(2) Phase Reversal protection **must** be disabled in reversing applications.

Figure 3.21 Typical Wiring Diagram for Two-speed Applications

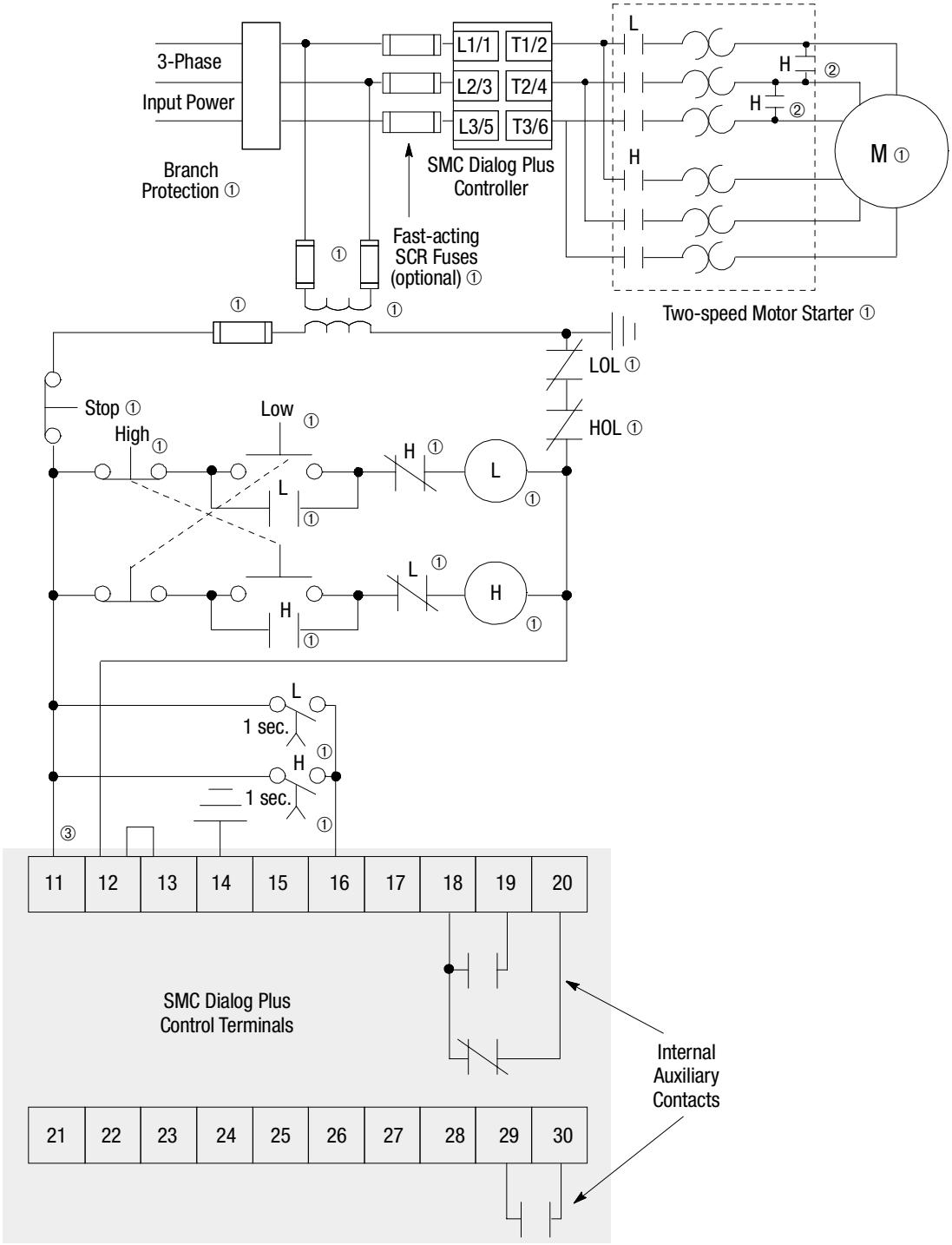

① Customer supplied.

② Two-speed, consequent pole installations.

③ Refer to the controller nameplate to verify the rating of the control power input voltage.

Standard Controller Wiring Diagrams (cont.)

Figure 3.22 Typical Wiring Diagram for Hand-Off-Auto (SCANport) Control

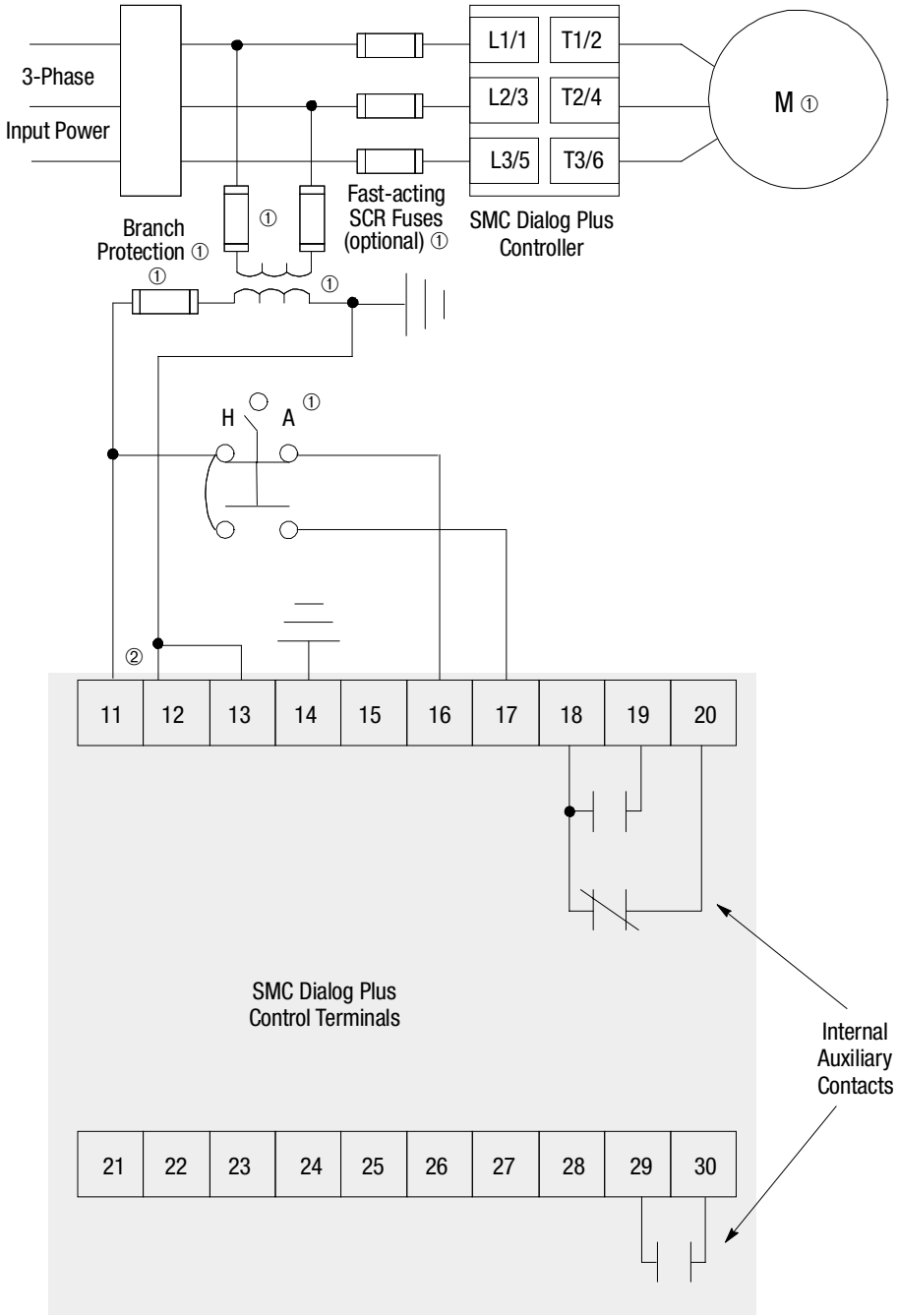

① Customer supplied.

② Refer to the controller nameplate to verify the rating of the control power input voltage.

Programming

Overview

This chapter provides a basic understanding of the programming keypad built into the SMC Dialog Plus controller. This chapter also describes programming the controller by modifying the parameters.

Keypad Description

The keys found on the front of the SMC Dialog Plus controller are described below.

ESC	**Escape**	Pressing the Escape key causes the programming system to move up one level in the menu structure.
SEL	**Select**	The Select key has two functions: • Pressing the Select key alternately causes the top or bottom line of the display to become active (indicated by flashing first character). • In parameter modification with series A FRN 3.00 or greater and series B human interface modules, Select moves the cursor from the least significant digit to the most significant.
▲ ▼	**Up/Down Arrows**	These keys are used to increment and decrement a parameter value or to scroll through the different modes, groups, and parameters.
↵	**Enter**	When pressed, a mode or group will be selected, or a parameter value will be entered into memory. After a parameter value has been entered into memory, the top line of display will automatically become active, allowing the user to scroll to the next parameter.

Programming Menu

Parameters are organized in a four-level menu structure for straightforward programming. Figure 4.1 details the programming menu structure and the four-level hierarchy.

Programming Menu (cont.)

Figure 4.1 Menu Structure Hierarchy

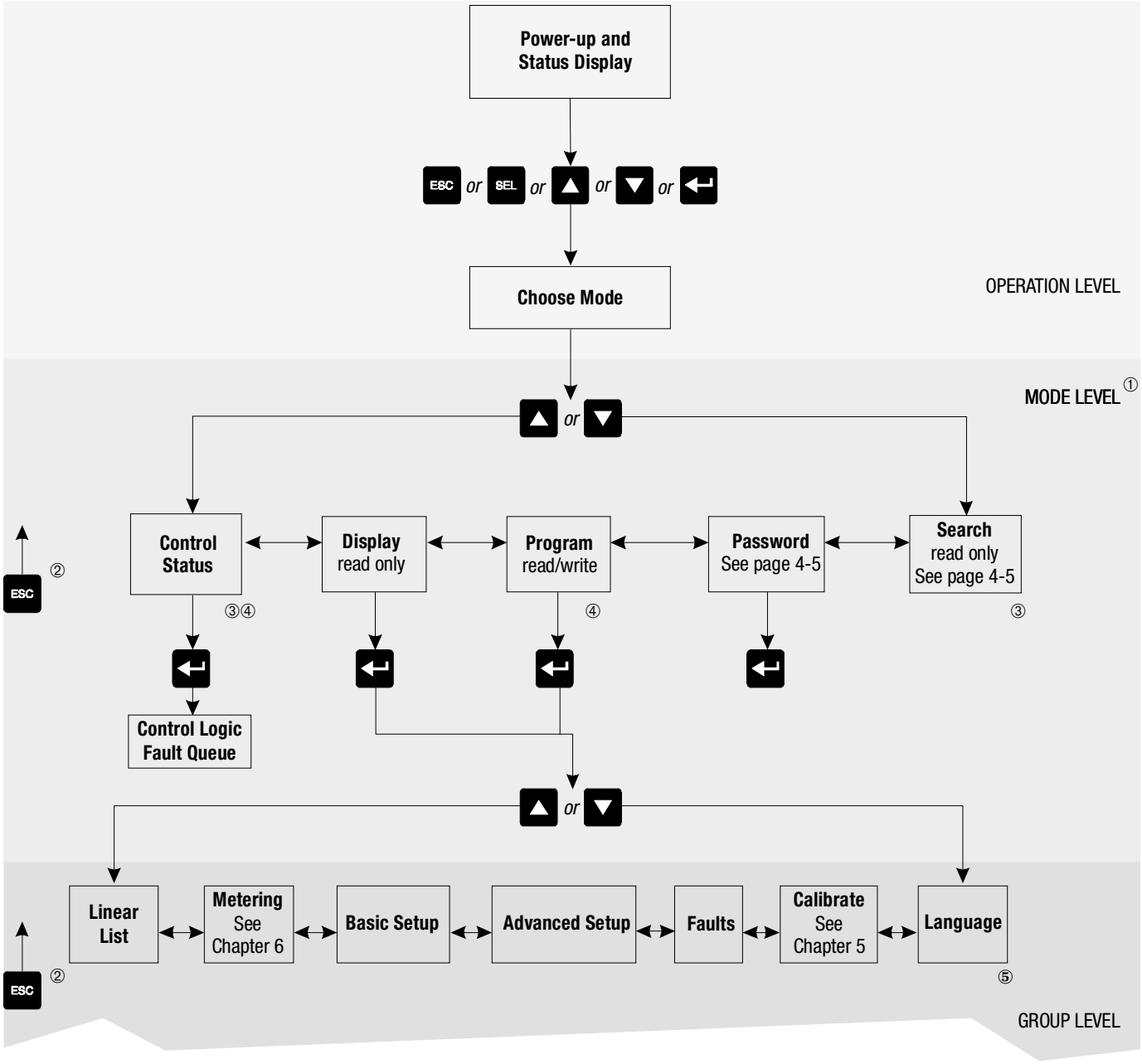

① The SMC Dialog Plus controller does not support EEPROM, Link, Process, or Start-up modes.

② Steps back one level.

③ Control Status and Search are only available when using a Series B Bulletin 1201 human interface module.

④ Password protected.

⑤ English is currently the only available language.

Figure 4.1 (Cont.) Menu Structure Hierarchy

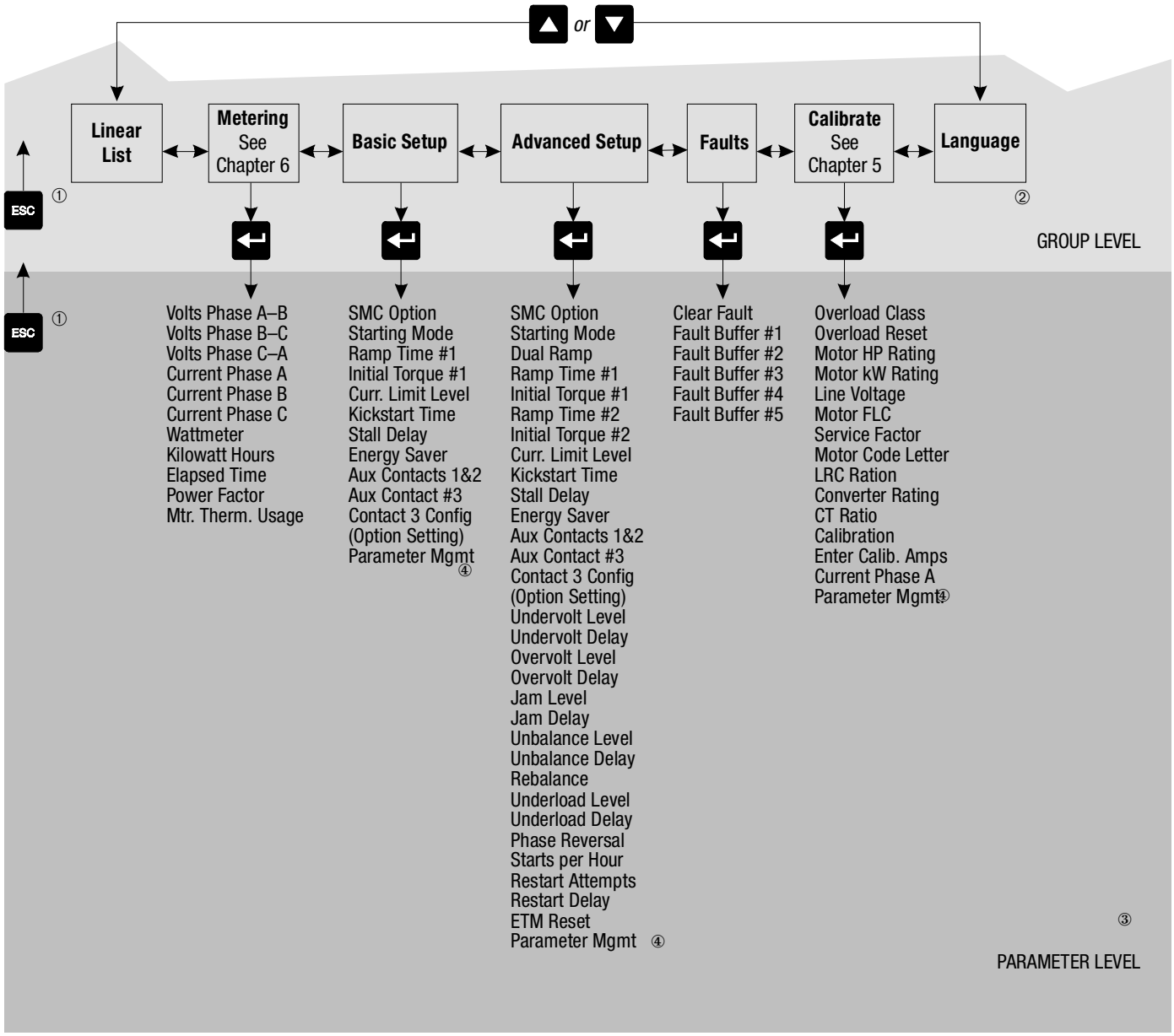

① Steps back one level.

② English is currently the only available language.

③ For further information on parameters, see Appendix B.

④ For further information on parameter management, see pages 4-6 and 4-7.

Programming Menu (cont.)

Table 4.A Parameter Linear List

Parameter No.	Description	Parameter No.	Description
1	Volts Phase A–B	45	Slow Speed Dir.
2	Volts Phase B–C	46	Slow Accel Cur.
3	Volts Phase C–A	47	Slow Running Cur.
4	Current Phase A	48	Braking Current
5	Current Phase B	49	Factory Use
6	Current Phase C	50	Factory Use
7	Wattmeter	51	Stopping Current
8	Kilowatt Hours	52	Undervolt Level
9	Elapsed Time	53	Undervolt Delay
10	Power Factor	54	Overvolt Level
11	Mtr. Therm Usage	55	Overvolt Delay
12	Factory Use	56	Jam Level
13	Factory Use	57	Jam Delay
14	SMC Option	58	Unbalance Level
15	ETM Reset	59	Rebalance
16	Factory Use	60	Underload Level
17	Parameter Mgmt.	61	Underload Delay
18	Clear Fault	62	Phase Reversal
19	Fault Buffer #1	63	Starts per Hour
20	Fault Buffer #2	64	Restart Attempts
21	Fault Buffer #3	65	Restart Delay
22	Fault Buffer #4	66	Factory Use
23	Fault Buffer #5	67	Factory Use
24	Factory Use	68	Factory Use
25	Factory Use	69	Line Voltage
26	Factory Use	70	Motor FLC
27	Factory Use	71	Factory Use
28	Starting Mode	72	Mtr. Code Letter
29	Dual Ramp	73	Factory Use
30	Ramp Time #1	74	Converter Rating
31	Initial Torque #1	75	CT Ratio
32	Ramp Time #2	76	Calibration
33	Initial Torque #2	77	Enter Calib. Amps
34	Curr. Limit Level	78	Language Select
35	Kickstart Time	79	Motor HP Rating
36	Overload Class	80	Motor kW Rating
37	Stall Delay	81	LRC Ratio
38	Energy Saver	82	Factory Use
39	Aux Contacts #1&2	83	Factory Use
40	Aux Contact #3	84	Service Factor
41	Contact 3 Config	85	Logic Mask
42	Stop Time	86	Unbalance Delay
43	Factory Use	87	S/W Version
44	Slow Speed Sel.	88	Overload Reset

Password

The SMC Dialog Plus controller allows the user to limit access to the programming system through password protection. This feature is a disabled with a factory-set parameter with a default setting of 0. To modify the password or login after a password is programmed, complete the procedure below.

Description	Action	Display
—	—	STOPPED 0.0 AMPS
1. Press any key to go from the status display to the Choose Mode menu.	ESC SEL ▲ ▼ ↵	CHOOSE MODE DISPLAY
2. Scroll with the Up/ Down keys until the Password option appears.	▲ *or* ▼	CHOOSE MODE PASSWORD
3. Press the Enter key to access the Password menu.	↵	PASSWORD IMODIFY **Options:**Login, Modify Logout
4. Press the Enter key.	↵	ENTER PASSWORD _ _ _ _ _
5. Press the Up/Down keys to enter the desired number. If you are modifying the password, make a note of it as displayed.	▲ *or* ▼	ENTER PASSWORD #####
6. Press the Enter key after you have completed modifying the password.①	↵	CHOOSE MODE PASSWORD

① After you have completed the programming process, re-enter the Password mode to log out. This will eliminate unauthorized access to the programming system.

Note: If you lose or forget the password, contact your nearest Allen-Bradley sales office. You can also call **1-800-765-SMCS** (765-7627) for assistance.

Search

The Search mode allows the user to view only those parameters that have settings other than the factory default values. This mode is available only when using Bulletin 1201 human interface module.

Parameter Management

Before you begin programming, it's important to understand how the controller memory is:

- structured within the SMC Dialog Plus controller
- used on power-up and during normal operation

Refer to Figure 4.2 and the explanations below.

Figure 4.2 Memory Block Diagram

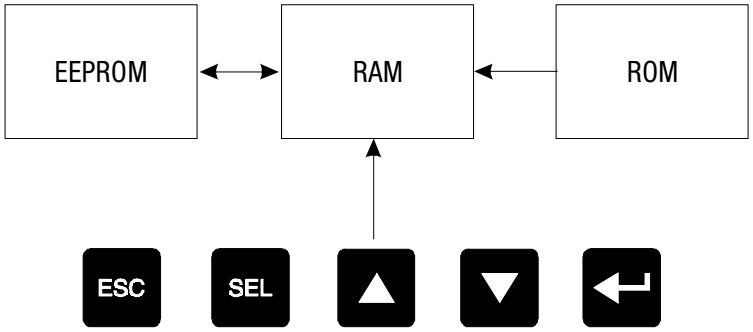

Random Access Memory (RAM)

This is the work area of the controller after it is powered up. When you modify parameters in the Program mode, the new values are stored in RAM. When power is applied to the controller, parameter values stored in the EEPROM are copied to RAM. **RAM is volatile and the values stored in this area are lost when the controller is powered down.**

Read-only Memory (ROM)

The SMC Dialog Plus controller comes with factory default parameter values. These settings are stored in nonvolatile ROM and are displayed the first time you enter the Program mode.

Electrically Erasable Programmable Read-only Memory (EEPROM)

The SMC Dialog Plus controller provides a nonvolatile area for storing user-modified parameter values in the EEPROM.

Using Parameter Management

Description	Action	Display
Saving to EEPROM To ensure that the newly modified parameters are not lost if control power is removed from the controller, store the values into EEPROM.	↵	PARAMETER MGMT STORE IN EE
Recalling from EEPROM Parameters stored in EEPROM can be manually brought to RAM by directing the controller to recall the values stored in its EEPROM.	↵	PARAMETER MGMT RECLL FRM EE
Recalling Defaults After parameter values have been modified and saved to EEPROM, factory default settings can still be re-initialized.	↵	PARAMETER MGMT DEFAULT INT

Parameter Modification

All parameters are modified using the same method. The basic steps to performing parameter modification are described below.

Note: Parameter values modified while the motor is operating are not valid until the next start sequence begins.

Description	Action	Display
—	—	STOPPED 0.0 AMPS
1. Press any key to go from the status display to the Choose Mode menu.	ESC SEL ▲ ▼ ↵	CHOOSE MODE DISPLAY
2. Scroll with the Up/Down keys until the Program option appears.	▲ *or* ▼	CHOOSE MODE PROGRAM
3. Press the Enter key to access the Program menu.	↵	PROGRAM METERING
4. Scroll with the Up/Down keys until the option you want to use (Basic Setup, Advanced Setup, etc.) appears. For this example, Basic Setup will be used.	▲ *or* ▼	PROGRAM BASIC SETUP
5. Press Enter to select the Basic Setup group.	↵	SMC OPTION STANDARD
6. Scroll to the next parameter by using the Up key.	▲	STARTING MODE SOFT START **Options:** Soft Start, Current Limit
7. To modify the parameter, press the Select button to move the cursor to the second line.	SEL	STARTING MODE SOFT START
8. Scroll to the option of your choice by using the Up/Down keys. For this example, we will choose Current Limit.	▲ *or* ▼	STARTING MODE CURRENT LIMIT
9. Press the Enter key to accept the new setting.	↵	STARTING MODE CURRENT LIMIT
10. Scroll to the next parameter by using the Up key. Continue the process until all desired settings are entered.	▲	RAMP TIME # 1 10 SEC
11. Press the Enter key to save the new settings to EEPROM.	↵	PARAMETER MGMT STORE IN EE

① If the Choose Mode menu does not provide the Program option, then you must enter your password.

② The first parameter displayed advises the user if any control option (i.e., Pump Control) is resident. This parameter is factory set and cannot be modified by the user.

③ The display will indicate that the second line is now active by flashing the first character. If the LCD display does not provide a flashing cursor, then the controller is in the Display mode.

④ You will now notice that the cursor has returned to flashing the first character of the first line.

Soft Start

The following parameters are specifically used to adjust the voltage ramp supplied to the motor.

Parameter	Option
Starting Mode This must be programmed for Soft Start.	**Soft Start**, Current Limit
Ramp Time #1 ① This programs the time period that the controller will ramp the output voltage up to full voltage from the Initial Torque level programmed.	0 to 30 seconds
Initial Torque #1 The initial reduced output voltage level for the voltage ramp to the motor is established and adjusted with this parameter.	0 to 90% locked rotor torque
Kickstart Time A boost of 550% full load current is provided to the motor for the programmed time period.	0.0 to 2.0 seconds

① If the controller senses that the motor has reached full speed before completing the voltage ramp, it will automatically switch to providing full voltage to the motor.

Current Limit Start

To apply a fixed reduced output voltage to the motor, the following parameters are provided for user adjustment:

Parameter	Option
Starting Mode This must be programmed for Current Limit.	Soft Start, **Current Limit**
Ramp Time #1 ① This programs the time period that the controller will hold the fixed, reduced output voltage before switching to full voltage.	0 to 30 seconds
Current Limit Level This parameter provides adjustability for the reduced output voltage level provided to the motor.	50 to 600% full load current
Kickstart Time A boost of 550% full load current is provided to the motor for the programmed time period.	0.0 to 2.0 seconds

① If the controller senses that the motor has reached full speed before completing the current limit start, it will automatically switch to providing full voltage to the motor.

Dual Ramp Start

The SMC Dialog Plus controller provides the user with the ability to select between two Soft Start settings. The parameters below are available in the Advanced Setup programming mode to obtain Dual Ramp control:

Parameter	Option
Advanced Setup The user must select the Advanced Setup programming mode to obtain access to the Dual Ramp parameters.	—
Starting Mode This must be programmed for Soft Start.	—
Dual Ramp ① This allows the user the option to choose between two Soft Start profiles defined by: 1. Ramp Time #1/Initial Torque #1 and 2. Ramp Time #2/Initial Torque #2. When this feature is turned on, the ramp time/initial torque combination is determined by a hard contact input to terminal 15. When this input signal is low, ramp time/initial torque #1 are selected. When this input is high, ramp time/initial torque #2 are selected.	No, Yes
Ramp Time #1 This programs the time period during which the controller will ramp the output voltage up to full voltage for the first Soft Start setup.	0 to 30 seconds
Initial Torque #1 This parameter establishes and adjusts the initial reduced output voltage level for the first Soft Start setup.	0 to 90% locked rotor torque
Ramp Time #2 This programs the time period during which the controller will ramp the output voltage up to full voltage for the second Soft Start setup.	0 to 30 seconds
Initial Torque #2 The initial reduced output voltage level for the second Soft Start setup is established and adjusted with this parameter.	0 to 90% locked rotor torque

① The Dual Ramp feature is available only with the standard controller.

Full Voltage Start

The SMC Dialog Plus controller may be programmed to provide a full voltage start (output voltage to the motor reaches full voltage within 1/4 second) with the following programming:

Parameter	Option
Starting Mode This **must** be programmed for Soft Start.	—
Ramp Time #1 This **must** be programmed for 0 seconds for a full voltage start.	—
Initial Torque #1 This **must** be programmed for 90% for a full voltage start.	—
Kickstart Time This **must** be programmed for 0.0 seconds for a full voltage start.	—

Basic Setup

The Basic Setup programming group provides a limited parameter set, allowing quick start-up with minimal adjustment. If the user is planning to implement some of the advanced features (i.e., Dual Ramp, Phase Rebalance, etc.), then the Advanced Setup programming group should be selected. It provides all the Basic Setup parameter set plus the advanced set.

Parameter	Option
SMC Option Displays the type of controller. This is factory set and not adjustable.	Standard
Starting Mode Allows the user to program the SMC Dialog Plus controller for the type of starting that best fits the application.	Soft Start, Current Limit
Ramp Time #1 This sets the time period during which the controller will ramp the output voltage.	0 to 30 seconds
Initial Torque #1 ① The initial reduced voltage output level for the voltage ramp is established and adjusted with this parameter.	0 to 90% of locked rotor torque
Current Limit Level ② This parameter provides adjustability for the reduced output voltage level provided to the motor.	50 to 600% full load current
Kickstart Time A boost of 550% of full load current is provided to the motor for the programmed time period.	0.0 to 2.0 seconds
Stall Delay Allows the user to program the stall protection delay time. The delay time begins after the start time has timed out.	0.0 to 10.0 seconds
Energy Saver The Energy Saver feature monitors the motor load, phasing back the voltage output to the motor when the motor is lightly loaded or unloaded.	Off, On
Aux Contacts 1&2 Form C contacts are provided as standard with the SMC Dialog Plus controller. These contacts are located at terminals 18, 19 and 20. Aux Contacts 1&2 allows the user to configure the operation of the contacts.	Normal, Up-to-speed
Aux Contact 3 A third auxiliary contact is provided between terminals 29 and 30. Aux Contact 3 allows the user to program the operation of the contact.	Normal, Fault
Contact 3 Config This parameter provides the user with the ability to program the “powered up” state of the third auxiliary contact.	N.O., N.C.
Parameter Mgmt ③ The newly programmed parameters’ values can be saved to memory, or the factory default parameter values can be recalled.	Ready, Default Init., Recll Frm EE, Store In EE

① Starting Mode must be programmed to Soft Start to obtain access to the Initial Torque parameter.

② Starting Mode must be programmed to Current Limit to obtain access to the Current Limit Level parameter.

③ The new programmed parameter values will not be stored to the EEPROM without the user’s direction in Parameter Management: Store In EE.

Advanced Setup

While the Basic Setup group allows the user to get started with a minimum number of parameters to modify, the Advanced Setup group allows full access to the SMC Dialog Plus controller's powerful parameter set. Following is a listing of the additional setup parameters provided.

Note: All of the Basic Setup parameters are available in the Advanced Setup group. The parameters shown below are in addition to the parameters in Basic Setup.

Parameter	Option
Dual Ramp ① Allows the user the option to choose between two Soft Start profiles.	Off, On
Ramp Time #2 Determines the soft start time for the second ramp of the Dual Ramp feature.	0 to 30 seconds
Initial Torque #2 Provides the initial torque setting for the second ramp of the Dual Ramp feature.	0 to 90% locked rotor torque
Undervoltage Level Determines the trip level as a percentage of line voltage.	0 to 99% (0 is the Off setting)
Undervoltage Delay ② Provides a delay period prior to a trip occurrence.	0 to 99 seconds
Overvoltage Level Determines the trip level as a percentage of line voltage.	0 to 199% (0 is the Off setting)
Overvoltage Delay ② Provides a delay period prior to a trip occurrence.	0 to 99 seconds
Jam Level ③ Determines the trip level as a percentage of the motor's full load current.	0 to 999% (0 is the Off setting)
Jam Delay Provides a delay period prior to a trip occurrence.	0.0 to 10.0 seconds
Unbalance Level Allows the user to set the voltage unbalance trip level.	0 to 25% (0 is the Off setting)
Unbalance Delay ② Provides a delay period prior to a trip occurrence.	0 to 99 seconds
Rebalance ④ Allows the user access to enable the Rebalance feature. See page 1-5 for a description.	Off, On
Underload Level ② Determines the trip level as a percentage of the motor's full load current.	0 to 99% (0 is the Off setting)
Underload Delay Provides a delay period prior to a trip occurrence.	0 to 99 seconds

① The Dual Ramp feature is available only with the standard controller.

② The delay time must be set to a value greater than zero when Undervoltage, Overvoltage, and Unbalance are enabled.

③ For Jam and Underload detection to function, the Motor FLC must be programmed in the Calibration group. See Chapter 5 for instructions.

④ To enable Rebalance, the Converter Rating parameter in the Calibrate programming group must be set for 20, 180, or 630.

Parameter	Option
Phase Reversal This parameter allows the user to enable phase reversal protection.	Off, On
Starts Per Hour Allows the user to limit the number of starts during a one hour period.	0–99 (0 is the Off setting)
Restart Attempts ① Determines the number of attempts the controller will make to automatically restart the motor after a fault.	0 to 5
Restart Delay ① Provides a delay period prior to a restart attempt.	0 to 60 seconds
ETM Reset Allows the user to reset the accumulated value of the elapsed time meter.	Off, On
Parameter Management ② The newly programmed parameter values can be saved to memory, or the factory defaults parameter values can be recalled.	Ready, Default Init., Recll Frm EE, Store In EE

① The Auto Restart feature is not available.

② The new programmed parameter values will not be stored to the EEPROM without the user's direction in parameter management: Store In EE

Example Settings

Undervoltage ①

With Line Voltage programmed for 480V and the Undervoltage level programmed for 80%, the trip value is 384V.

Overvoltage①

With Line Voltage programmed for 240V and the Overvoltage level programmed for 115%, the trip value is 276V.

Jam ②

With Motor FLC programmed for 150 Amps and the Jam level programmed for 400%, the trip value is 600 Amps.

Underload ②

With Motor FLC programmed for 90 Amps and the Underload level programmed for 60%, the trip value is 54 Amps.

① The average value of the three phase-to-phase voltages is utilized.

② The largest value of the three phase currents is utilized.

Calibration

Overview

The Calibrate programming group allows the user to set parameters to calibrate the controller to the connected motor. It is important to correctly input the data to achieve the best performance from your controller.

ATTENTION: For overload protection, it is critical that the data be entered as it appears on the motor nameplate.

Motor Data Entry

In the Program mode, enter the correct values into the Calibrate group:

Parameter	Option	Display
Overload Class The factory default setting disables overload protection. To enable it, enter the desired trip class in this parameter. See pages 1-5 and 1-7 for further details and trip curves.	Off, 10, 15, 20, 30	OVERLOAD CLASS _____
Overload Reset Allows the user to select either a manual or auto reset after an overload fault.	Manual, Auto	OVERLOAD RESET MANUAL
Motor HP Rating ①② Enter the value from the motor's nameplate.	0.0–6,553.5 HP	MOTOR HP RATING #### HP
Motor kW Rating ①② Enter the value from the motor's nameplate.	0.0–6,553.5 kW	MOTOR KW RATING #### KW
Line Voltage ① Enter the system voltage in this parameter. This **must** be done to ensure optimum motor performance and correct operation of undervoltage and overvoltage protection.	1–9,999V	LINE VOLTAGE #### VOLTS
Motor FLC ① Enter the value from the motor's nameplate.	1.0–999.9A	MOTOR FLC ###.# AMPS
Service Factor Enter the value from the motor's nameplate.	0.01–1.99	SERVICE FACTOR #.##

① Refer to the SMC Dialog Plus controller nameplate for maximum ratings. Exceeding these could result in damage to the controller.

② The controller's programming system will not allow both HP and kW to be programmed.

Motor Data Entry (cont.)

Parameter	Option	Display
Motor Code Letter ① Enter the value from the motor's nameplate. If the motor nameplate does not provide this, consult the motor manufacturer. See Table 5.A for code letter definitions.	A–V	MOTOR CODE LETTER #
LRC Ratio ① IEC motors do not provide a motor code letter. Consult the motor manufacturer for the motor's locked rotor current/full load current ratio.	0.0–19.9	LRC RATIO ##.#
Converter Rating If a Bulletin 825 converter module will provide current feedback to the controller, enter the converter's rating to ensure proper current measurement scaling.	None, 20, 180, 630	CONVERTER RATING ###
CT Ratio For controllers using external current transformers with the 20A converter module for current feedback, current transformers with 5A secondaries are required. Enter the current transformer ratio in this parameter.	5 through 1200:5	CT RATIO #### : 5

① The controller's programming system will not allow both Motor Code Letter and LRC Ratio to be programmed.

Table 5.A Motor Codes

Letter Designation	kVA/HP ①	Letter Designation	kVA/HP ①
A	0–3.15	L	9.0–10.0
B	3.15–3.55	M	10.0–11.2
C	3.55–4.0	N	11.2–12.5
D	4.0–4.5	P	12.5–14.0
E	4.5–5.0	R	14.0–16.0
F	5.0–5.6	S	16.0–18.0
G	5.6–6.3	T	18.0–20.0
H	6.3–7.1	U	20.0–22.4
J	7.1–8.0	V	22.4 and up
K	8.0–9.0		

① Locked kVA per horsepower range includes the lower figure up to, but not including, the higher figure. For example, 3.14 is designated by letter A and 3.15 by letter B.

Calibration Procedure

For current measurement accuracy, use the procedure below to calibrate the SMC Dialog Plus controller to the connected motor. A clamp-on ammeter, which provides a true rms measurement and has a published accuracy of ±1% (Fluke model 33 or equal), is required to perform this procedure.

Notes: (1) If you plan to use the Bulletin 825 converter module for current feedback to the SMC Dialog Plus controller, this calibration procedure is not necessary.
(2) An unbalanced three-phase system may affect the accuracy of the calibration.
(3) It is recommended that Parameter #36, Overload Class, is programmed to OFF during the calibration procedure.

Calibration requires the motor to be operated at full speed. Additionally, the motor must be connected to its load in order that the motor draw as near to its full load current (FLC) rating as possible. This is necessary so that maximum accuracy is achieved for current measurements at overload trip levels.

Description	Action	Display
1. Check all power and control wiring connections to the controller and motor. Apply a start command to the controller and check for motor rotation to full speed.	—	AT SPEED ###.# AMPS
2. Using the clamp-on ammeter, measure the three-phase motor currents. Place the ammeter around the phase with the largest current draw. ①	—	AT SPEED ###.# AMPS
3. In the Calibrate group, scroll to the Calibration parameter.	▲	CALIBRATION OFF
4. Monitor the clamp-on ammeter and verify that the motor current is stable. Press the Select key. Toggle the Up/Down keys to the Activate setting. Press the Enter key to accept. Monitor the ammeter display for the next 2 seconds and record the average value. During this time period, the SMC Dialog Plus controller samples motor response data.	SEL ▲ ▼ ↵	CALIBRATION ACTIVATE
5. Access the next parameter using the Up key.	▲	ENTER CALIB. AMPS 0.0 AMPS
6. Press the Select key. Enter the clamp-on meter value monitored in step 4. Press the Enter key to accept. **The SMC Dialog Plus controller is now calibrated**.	SEL ▲ ▼ ↵	ENTER CALIB. AMPS ###.# AMPS

① The currents should measure a minimum of 70% of the motor's full load current rating in order to achieve the best results in accuracy.

Calibration Procedure (cont.)

Description	Action	Display
7. You can scroll to the next parameter to view the current measurement in phase A.	▲	CURRENT PHASE A ###.# AMPS
8. Scroll to the next parameter to save the Calibrate group settings.	▲	PARAMETER MGMT READY
9. Press the Select key. Scroll with the Up/Down keys to Store In EE selection. Press the Enter key to save the settings to EEPROM.	SEL ▲ ▼ ↵	PARAMETER MGMT STORE IN EE

ATTENTION: After calibration is completed, program the desired overload class and save the setting to the controller's EEPROM.

ATTENTION: This method of current measurement is not applicable to multi-motor installations or resistive heating loads. Utilization of the Bulletin 825 converter module is required for these applications if current measurement is required.

Metering

Overview

While the SMC Dialog Plus controller operates your motor, it also monitors several different parameters, providing a full function metering① package.

Viewing Metering Data

To access the metering information, follow the procedure below.

Description	Action	Display
—	—	AT SPEED ###.# AMPS
1. Press any button to access the Choose Mode menu.	ESC SEL ▲ ▼ ↵	CHOOSE MODE _ _ _ _ _
2. Scroll with the Up/Down keys until the Display option is shown.	▲ *or* ▼	CHOOSE MODE DISPLAY
3. Press the Enter key to select the Display option.	↵	CHOOSE GROUP _ _ _ _ _
4. Scroll with the Up/Down keys until the Metering option is displayed.	▲ *or* ▼	CHOOSE GROUP METERING
5. Press the Enter key to access the Metering group.	↵	

① Refer to page 1-10 for details on the metering functions.

Viewing Metering Data (cont.)

Description	Action	Display
6. Scroll through the Metering parameters with the Up/Down keys to access the desired information.	▲ *or* ▼	VOLTS PHASE A–B ### VOLTS VOLTS PHASE B–C ### VOLTS VOLTS PHASE C–A ### VOLTS CURRENT PHASE A ###.# AMPS CURRENT PHASE B ###.# AMPS CURRENT PHASE C ###.# AMPS WATTMETER ##### kW KILO-WATT HOURS ##### kWH ELAPSED TIME ##### HOURS POWER FACTOR .## MTR. THERM USAGE ## %

Options

Overview

The SMC Dialog Plus controller offers a variety of unique control options that provide enhanced motor starting and stopping capabilities. (See pages 1-12 through 1-15 for brief descriptions of each option.)

Note: Only one option can reside in a controller.

Human Interface Module

The control buttons available with the Bulletin 1201 human interface modules are compatible with the SMC Dialog Plus controller's control options. The following table details the functionality of each button with regards to each option.

Notes: (1) Control logic must be enabled prior to initiating control commands to the SMC Dialog Plus controller. Refer to pages 2-14 and 2-15 for instructions.

(2) The control terminals must be wired according to Figure 3.14 on page 3-10.

Option	Action	Operation
Soft Stop	I	The green start button, when pressed, will commence motor acceleration to full speed.
	O	The red stop button, when pressed, will provide a coast stop.
	JOG	The jog button, when pressed, will initiate a soft stop maneuver.
Pump Control	I	The green start button, when pressed, will commence motor acceleration to full speed.
	O	The red stop button, when pressed, will provide a coast stop.
	JOG	The jog button, when pressed, will initiate a pump stop maneuver.

Option	Action	Operation
Preset Slow Speed	I	The green start button, when pressed, will commence motor acceleration to full speed.
	O	The red stop button, when pressed, will provide a coast stop.
	JOG	The jog button, when pressed, will initiate slow speed motor operation from a “stopped” status.
Smart Motor Braking	I	The green start button, when pressed, will commence motor acceleration to full speed.
	O	The red stop button, when pressed, will provide a coast stop.
	JOG	The jog button, when pressed, will initiate a brake stop.
Accu-Stop	I	The green start button, when pressed, will commence motor acceleration to full speed.
	O	The red stop button, when pressed, will provide a coast stop.
	JOG	With a “stopped” status, the jog button, when pressed, will initiate slow speed motor operation. From an “at speed” condition, the jog button, when pressed, will initiate braking to slow speed operation. The controller will maintain slow speed operation as long as the jog button is pressed.
Slow Speed with Braking	I	The green start button, when pressed, will commence motor acceleration to full speed.
	O	The red stop button, when pressed, will provide a coast stop.
	JOG	With a “stopped” status, the jog button, when pressed, will initiate slow speed motor operation. From an “at speed” condition, the jog button, when pressed, will initiate a brake stop.

ATTENTION: The Bulletin 1201 human interface module’s stop push button is not intended to be used as an emergency stop. Refer to applicable standards for emergency stop requirements.

Programming Parameters

The following table provides the option-specific parameters that are provided with each control option. These parameters are in addition to those already discussed in the Basic Setup, Advanced Setup, Metering, and Calibration groups. Diagrams supporting the options described below are shown later in this chapter.

Option	Parameter	Range
Soft Stop	**SMC Option** This parameter identifies the type of control present and is not user programmable.	Soft Stop
	Soft Stop Time Allows the user to set the time period for the soft stopping function.	0–60 seconds
Pump Control	**SMC Option** This parameter identifies the type of control present and is not user programmable.	Pump Control
	Pump Stop Time Allows the user to set the time period for the pump stopping function.	0–120 seconds
	Starting Mode Allows the user to program the SMC Dialog Plus controller for the type of starting that best fits the application.	Pump Start, Soft Start, Current Limit Start
Preset Slow Speed	**SMC Option** This parameter identifies the type of control present and is not user programmable.	Preset Slow
	Slow Speed Select Allows the user to program the slow speed that best fits the application.	Low: 7% – forward, 10% – reverse High: 15% – forward, 20% – reverse
	Slow Speed Direction This parameter programs the slow speed motor rotational direction.	Forward, Reverse
	Slow Accel Current Allows the user to program the required current to accelerate the motor to slow speed operation.	0–450% of full load current
	Slow Running Current Allows the user to program the required current to operate the motor at the slow speed setting.	0–450% of full load current

Programming Parameters (cont.)

SMB Smart Motor Braking	**SMC Option** This parameter identifies the type of control present and is not user programmable.	SMB Braking
	Braking Current ① Allows the user to program the intensity of the braking current applied to the motor.	0–400% of full load current
Accu-Stop	**SMC Option** This parameter identifies the type of control present and is not user programmable.	Accu-Stop
	Slow Speed Select Allows the user to program the slow speed that best fits the application.	Low: 7% High: 15%
	Slow Accel Current Allows the user to program the required current to accelerate the motor to slow speed operation.	0–450% of full load current
	Slow Running Current Allows the user to program the required current to operate the motor at the slow speed setting.	0–450% of full load current
	Braking Current ① Allows the user to program the intensity of the braking current applied to the motor.	0–400% of full load current
	Stopping Current ① Allows the user to program the intensity of the braking current applied to the motor from slow speed operation.	0–400% of full load current
Slow Speed with Braking	**SMC Option** This parameter identifies the type of control present and is not user programmable.	Slow Speed Brake
	Slow Speed Select Allows the user to program the slow speed that best fits the application.	Low: 7% High: 15%
	Slow Accel Current Allows the user to program the required current to accelerate the motor to slow speed operation.	0–450% of full load current
	Slow Running Current Allows the user to program the required current to operate the motor at the slow speed setting.	0–450% of full load current
	Braking Current ① Allows the user to program the intensity of the braking current applied to the motor.	0–400% of full load current

① All braking/stopping current settings in the range of 1–100% will provide 100% braking current to the motor.

Control Wiring for SCANport Control

Refer to Figure 3.14 on page 3-10 for the applicable wiring diagram to achieve start-stop control via the SCANport.

Soft Stop, Pump Control, and SMB Smart Motor Braking Options

Figure 7.1 through Figure 7.6 show the different wiring for the Soft Stop, Pump Control, and SMB Smart Motor Braking options.

Figure 7.1 Typical Wiring Diagram

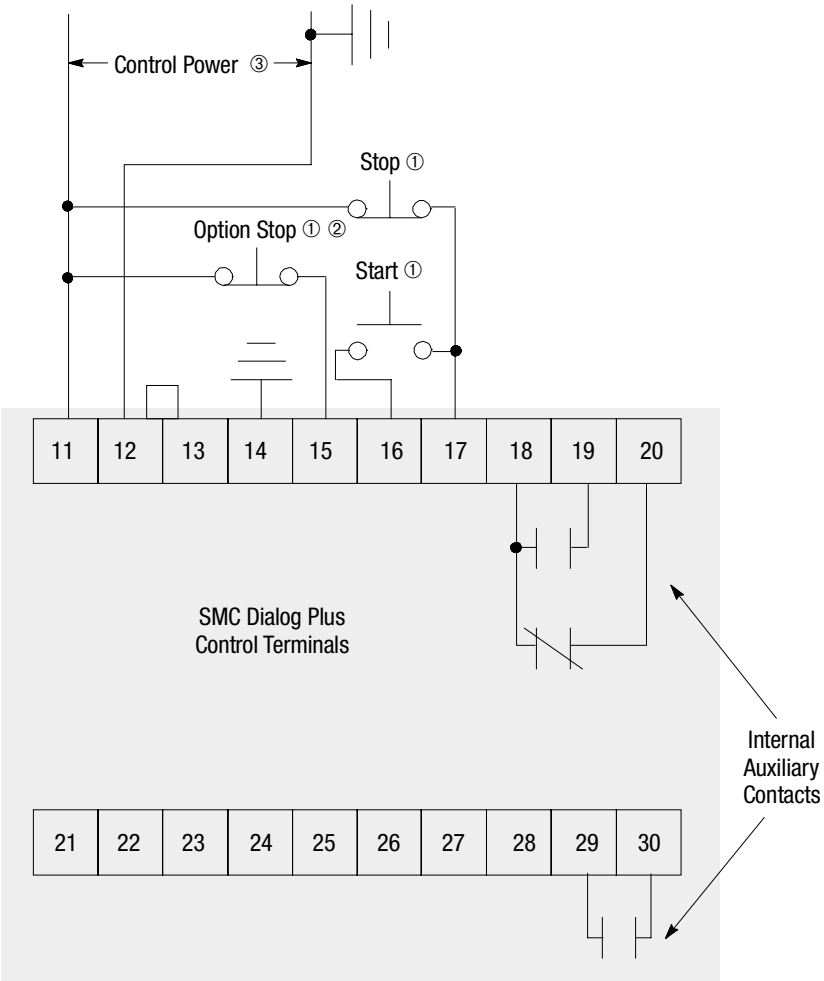

① Customer supplied.

② Soft Stop, Pump Stop, or Brake.

③ Refer to the controller nameplate to verify the rating of the control power input voltage.

Note: Refer to Chapter 3 for typical power circuits.

Figure 7.2 Typical Retrofit Wiring Diagram

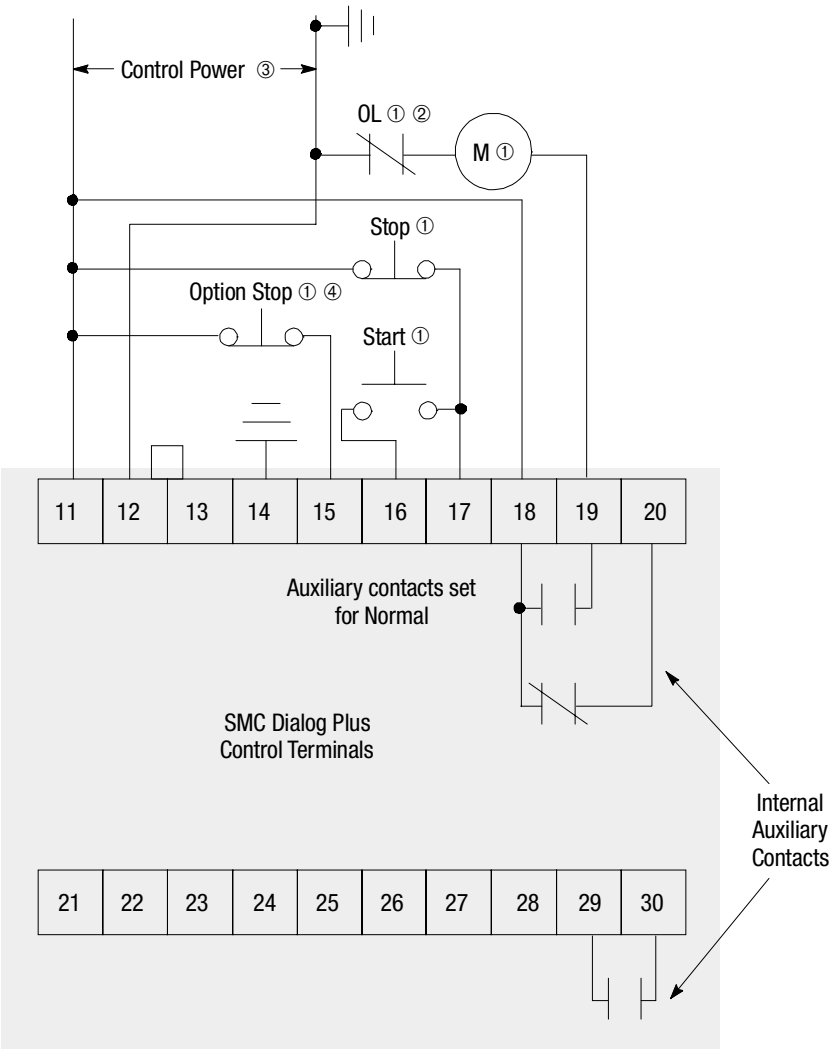

① Customer supplied.

② Overload protection should be disabled in the SMC Dialog Plus controller.

③ Refer to the controller nameplate to verify the rating of the control power input voltage.

④ Soft Stop, Pump Stop, or Brake.

Note: Refer to Chapter 3 for typical power circuits.

Figure 7.3 Typical Wiring Diagram for Applications Requiring an Isolation Contactor

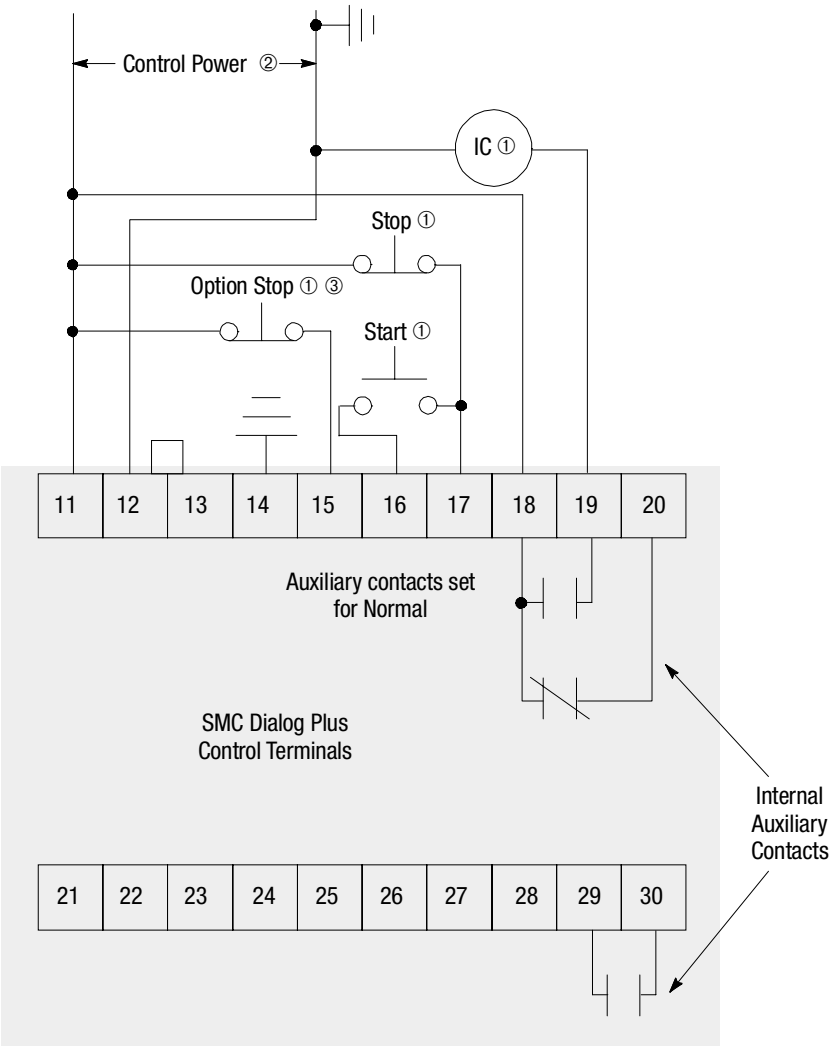

① Customer supplied.

② Refer to the controller nameplate to verify the rating of the control power input voltage.

③ Soft Stop, Pump Stop, or Brake.

Note: Refer to Chapter 3 for typical power circuits.

Figure 7.4 Typical Wiring Diagram for Applications Requiring a Bypass Contactor

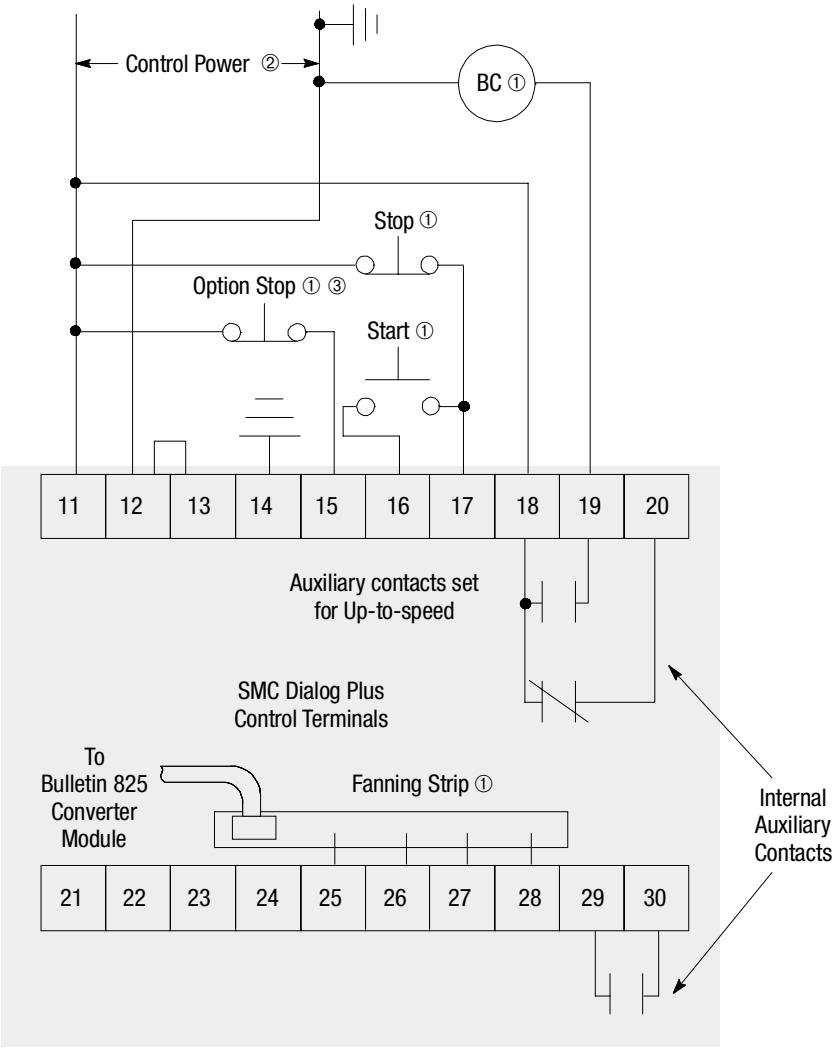

① Customer supplied.

② Refer to the controller nameplate to verify the rating of the control power input voltage.

③ Soft Stop, Pump Stop, or Brake.

Note: Refer to Chapter 3 for typical power circuits.

Figure 7.5 Typical Wiring Diagram for Two-wire Control or Programmable Controller Interfacing

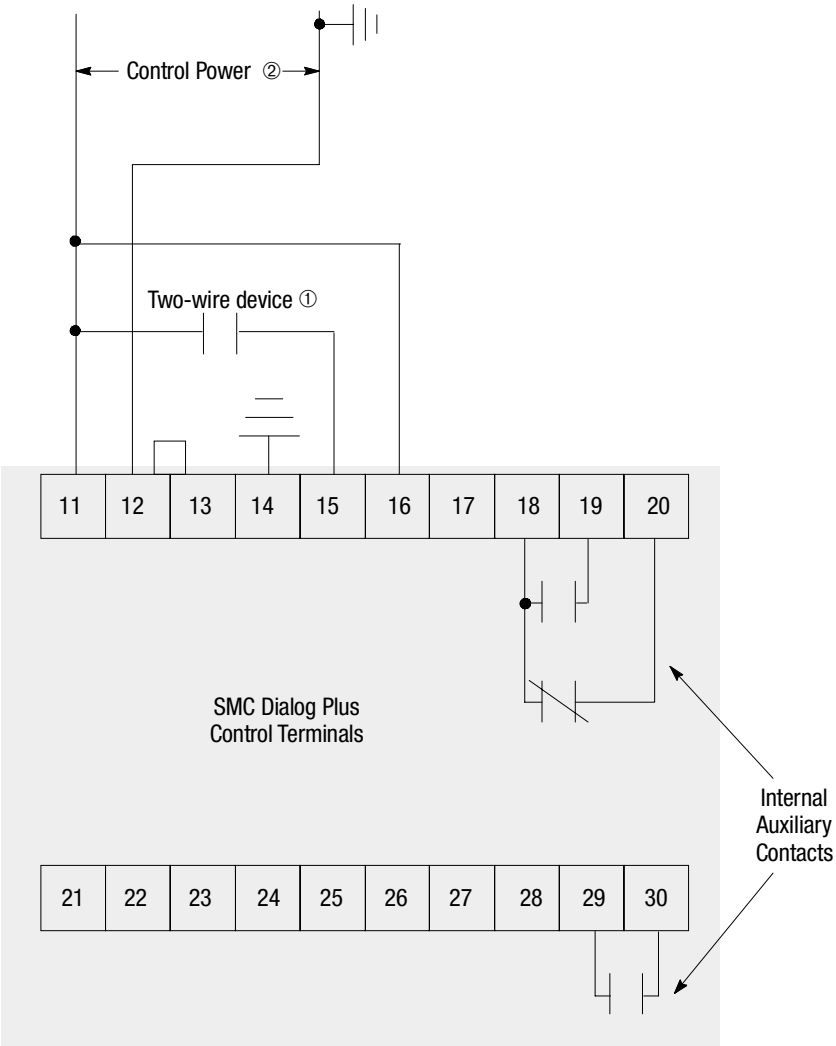

① Customer supplied.

② Refer to the controller nameplate to verify the rating of the control power input voltage.

Notes: (1) Refer to Chapter 3 for typical power circuits.
(2) The OFF state leakage current for a solid-state device must be less than 6 mA.

Soft Stop, Pump Control, and SMB Smart Motor Braking Options (cont.)

Figure 7.6 Typical Wiring Diagram for Hand-Off-Auto (SCANport) Control

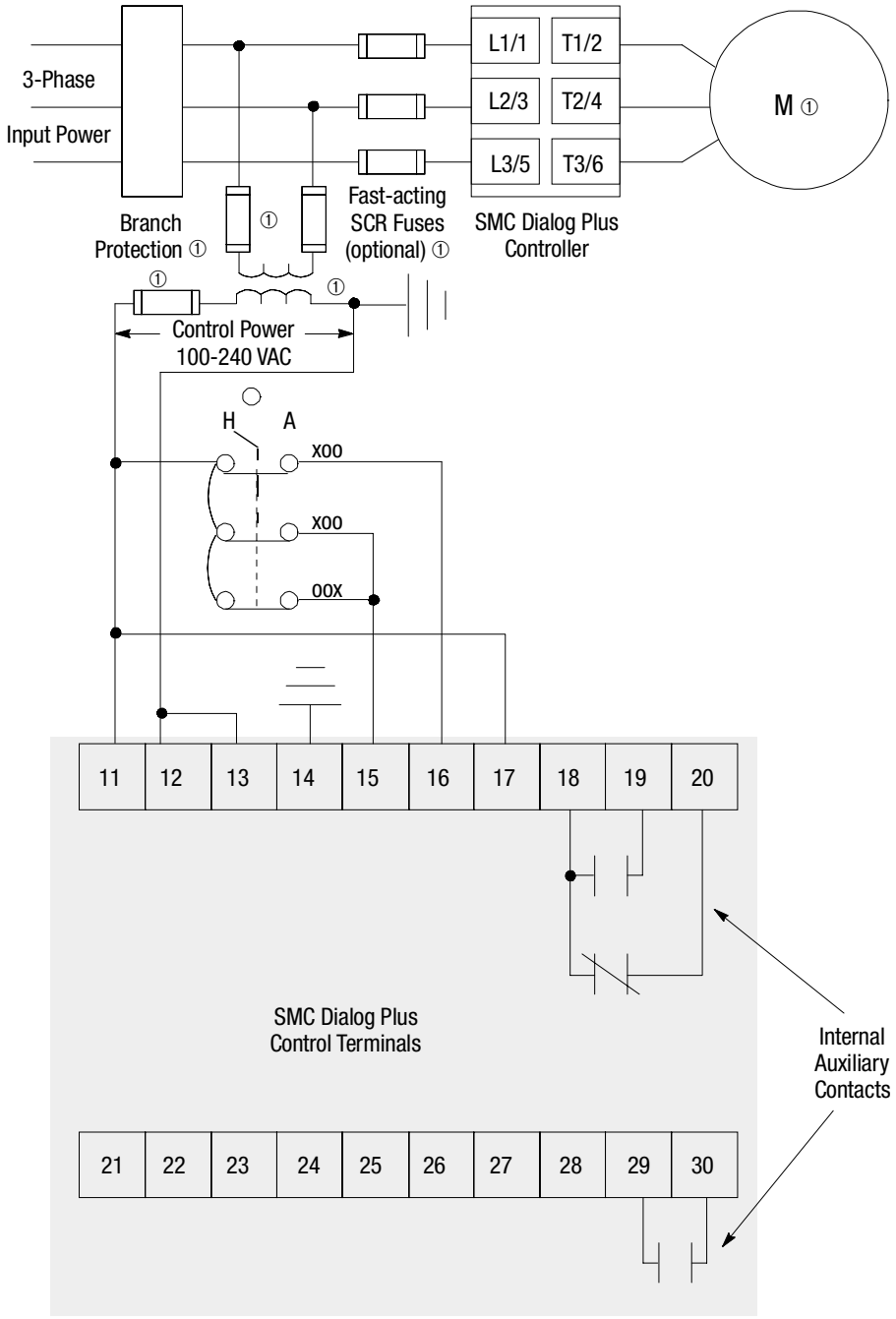

① Customer supplied.

② Refer to the controller nameplate to verify the rating of the control power input voltage.

Soft Stop Option

Figure 7.7 Soft Stop Option Sequence of Operation

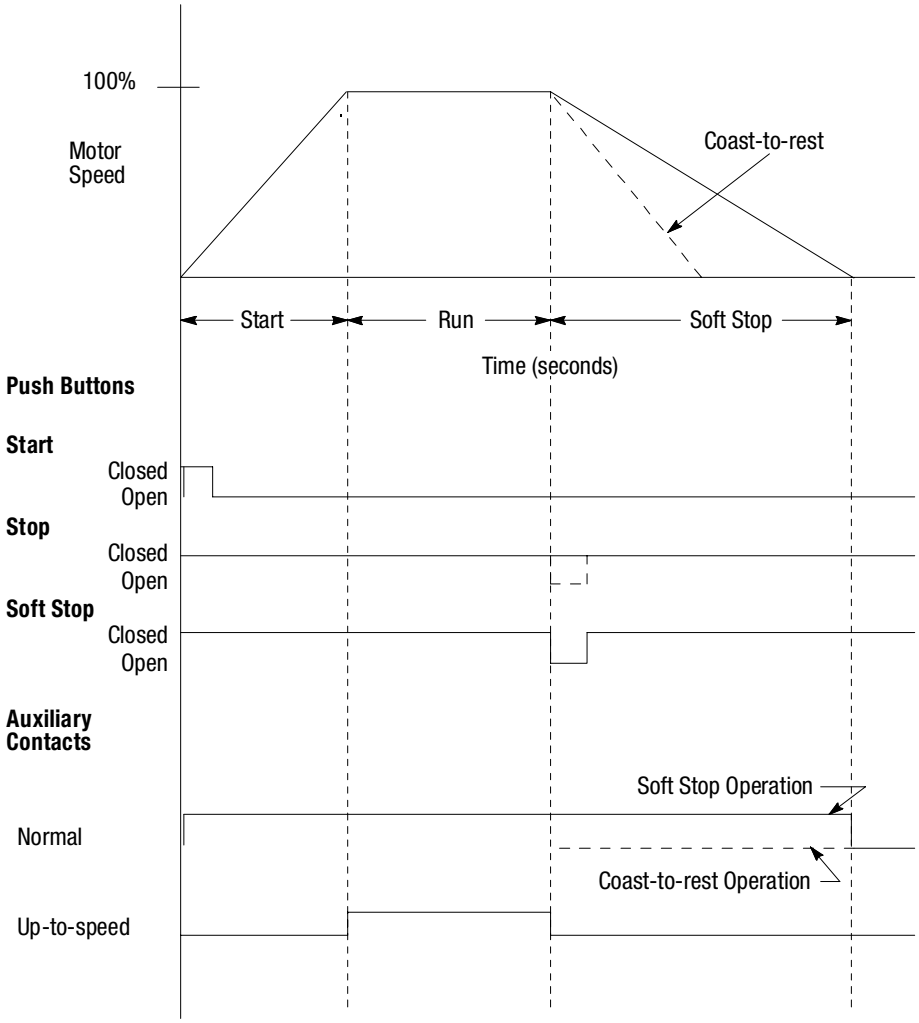

ATTENTION: The user is responsible for determining which stopping mode is best suited to the application and will meet applicable standards for operator safety on a particular machine.

Pump Control Option

Figure 7.8 Pump Control Option Sequence of Operation

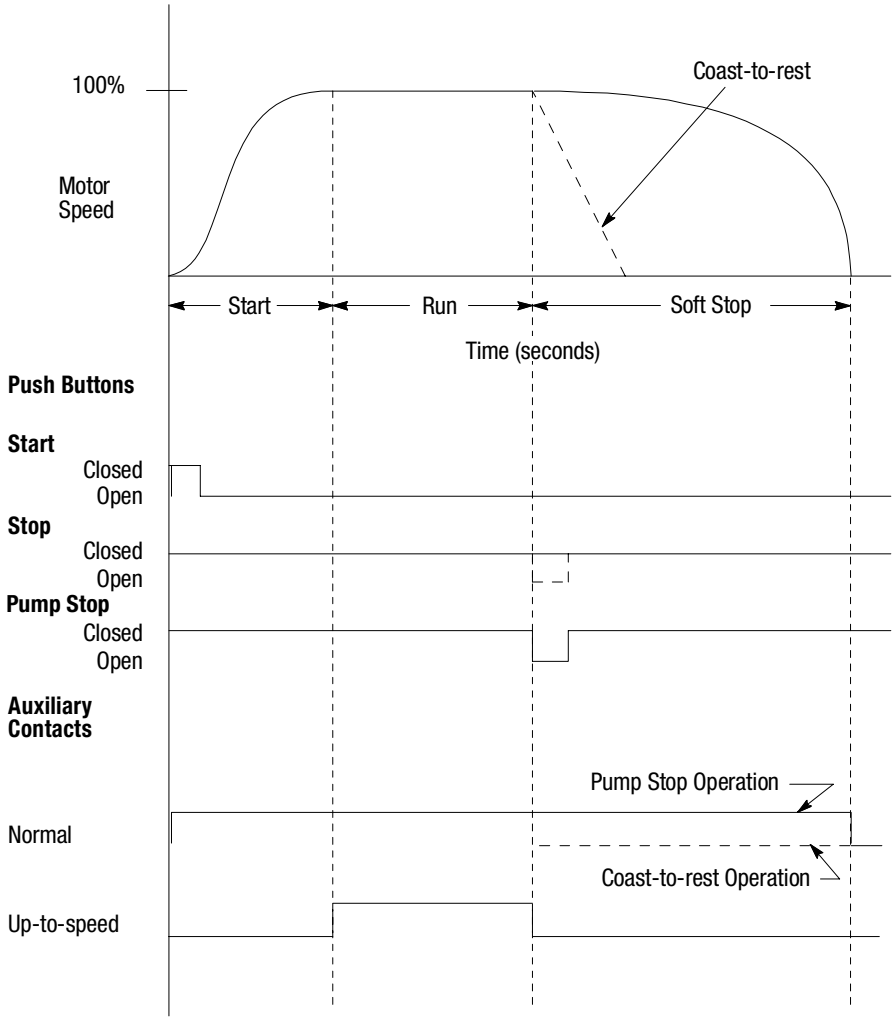

ATTENTION: The user is responsible for determining which stopping mode is best suited to the application and will meet applicable standards for operator safety on a particular machine.

SMB Smart Motor Braking Option

Figure 7.9 SMB Smart Motor Braking Sequence of Operation

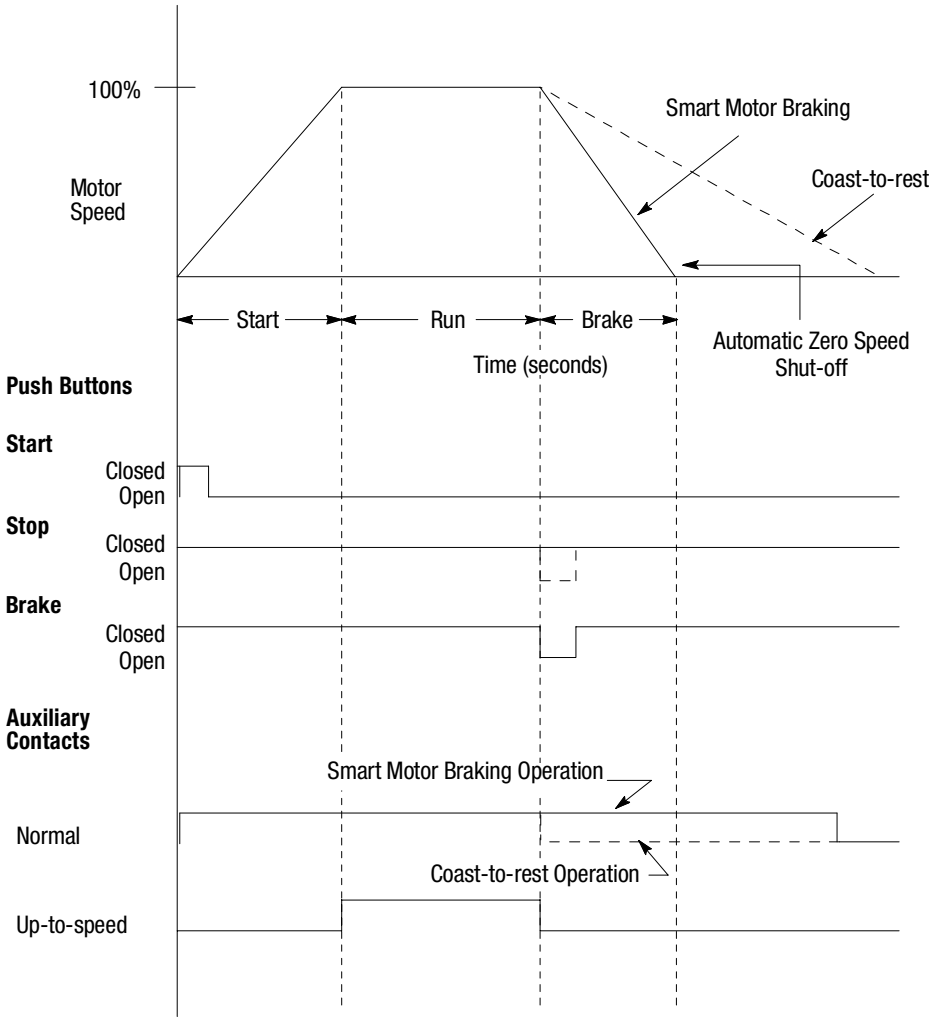

ATTENTION: The user is responsible for determining which stopping mode is best suited to the application and will meet applicable standards for operator safety on a particular machine.

Preset Slow Speed and Accu-Stop Options

Figure 7.10 through Figure 7.14 shows the different wiring for the Preset Slow Speed and Accu-Stop options.

Figure 7.10 Typical Wiring Diagram for the Preset Slow Speed Option

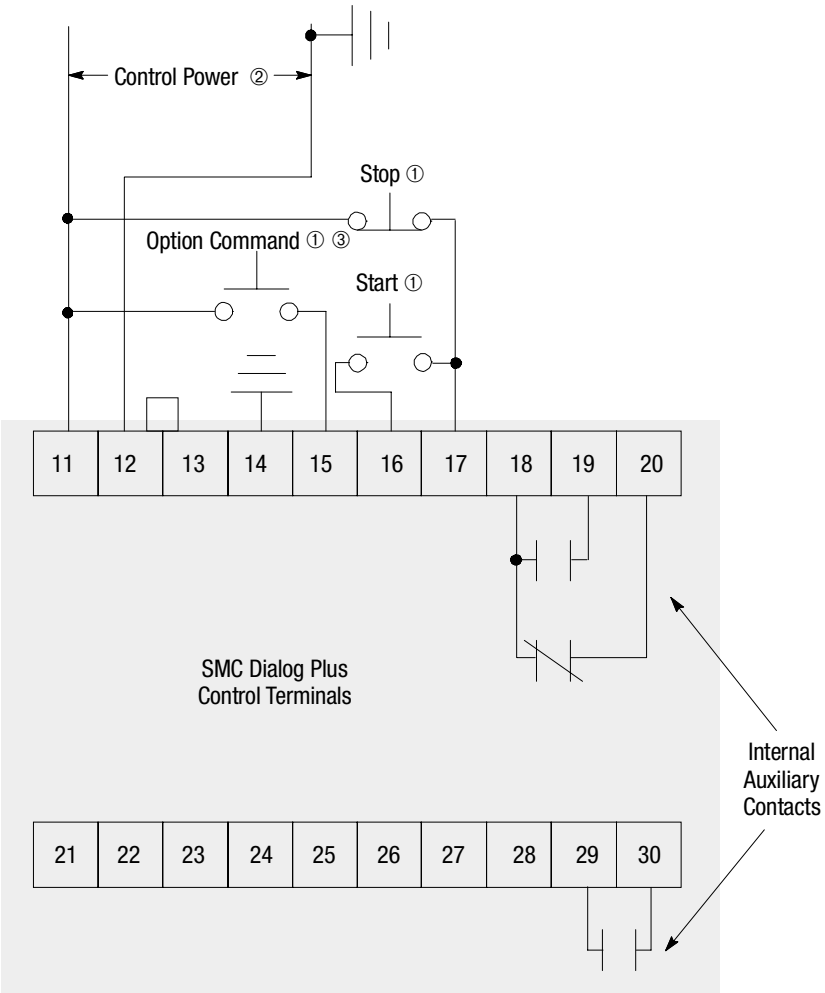

① Customer supplied.

② Refer to the controller nameplate to verify the rating of the control power input voltage

③ Slow Speed or Accu-Stop.

Note: Refer to Chapter 3 for typical power circuits.

Figure 7.11 Typical Retrofit Wiring Diagram

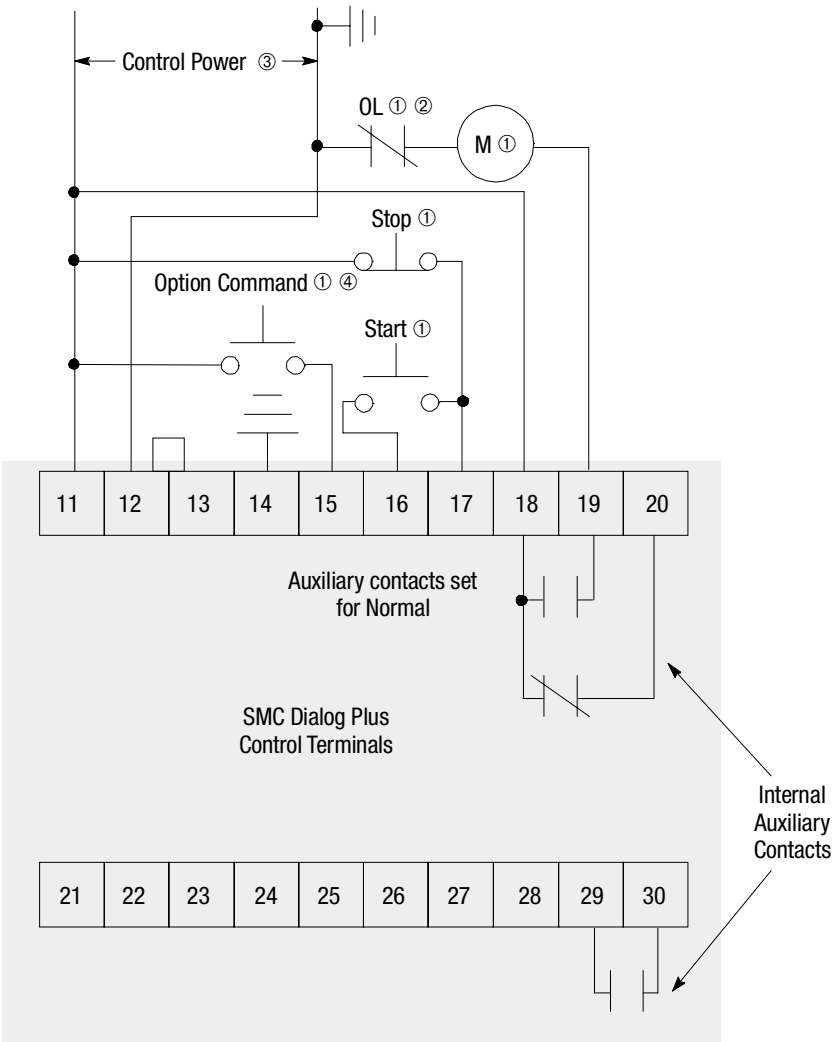

① Customer supplied.

② Overload protection should be disabled in the SMC Dialog Plus controller.

③ Refer to the controller nameplate to verify the rating of the control power input voltage.

④ Slow Speed or Accu-Stop.

Note: Refer to Chapter 3 for typical power circuits.

Figure 7.12 Typical Wiring Diagram for Applications Requiring an Isolation Contactor

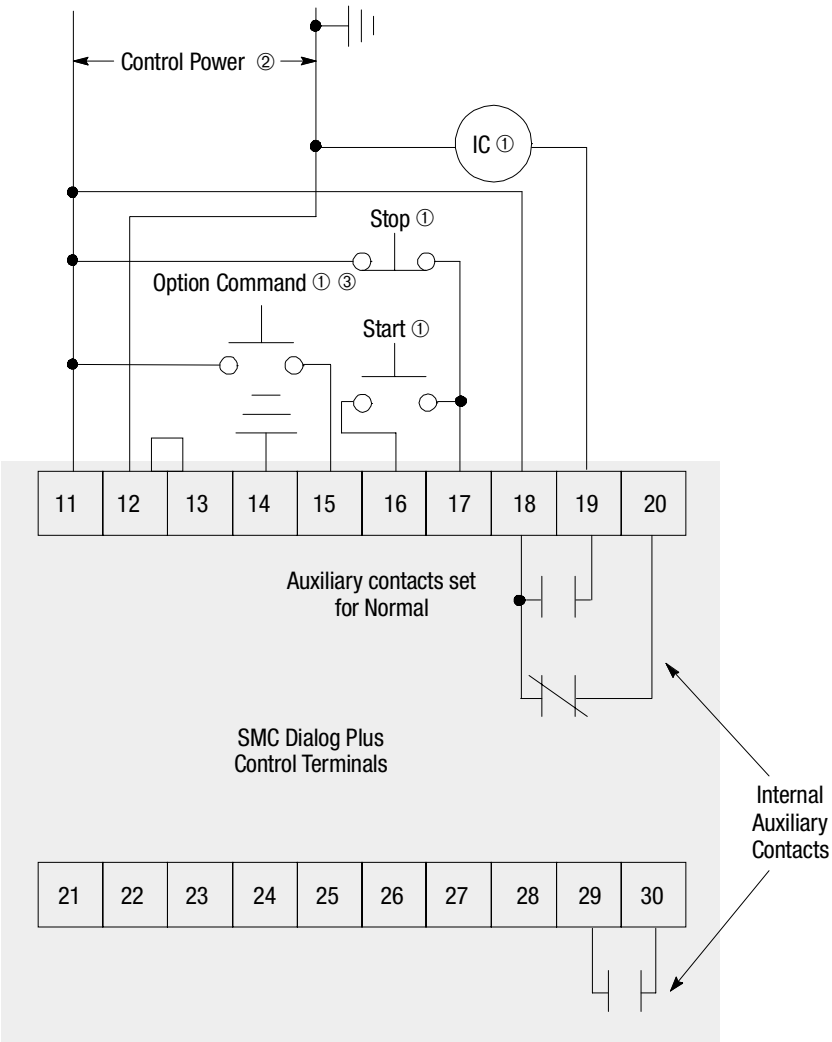

① Customer supplied.

② Refer to the controller nameplate to verify the rating of the control power input voltage.

④ Slow Speed or Accu-Stop.

Note: Refer to Chapter 3 for typical power circuits.

Figure 7.13 Typical Wiring Diagram for Applications Requiring a Bypass Contactor

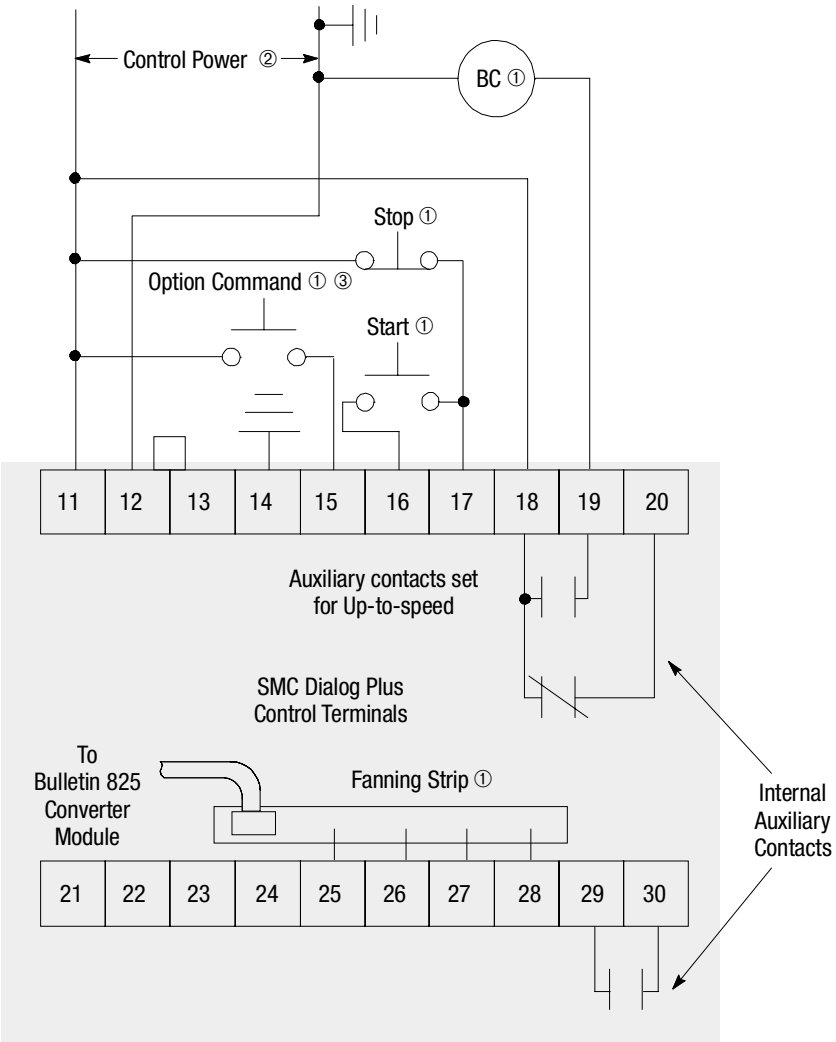

① Customer supplied.

② Refer to the controller nameplate to verify the rating of the control power input voltage.

④ Slow Speed or Accu-Stop.

Note: Refer to Chapter 3 for typical power circuits.

Preset Slow Speed and Accu-Stop Options (cont.)

Figure 7.14 Typical Wiring Diagram for Hand-Off-Auto (SCANport) Control

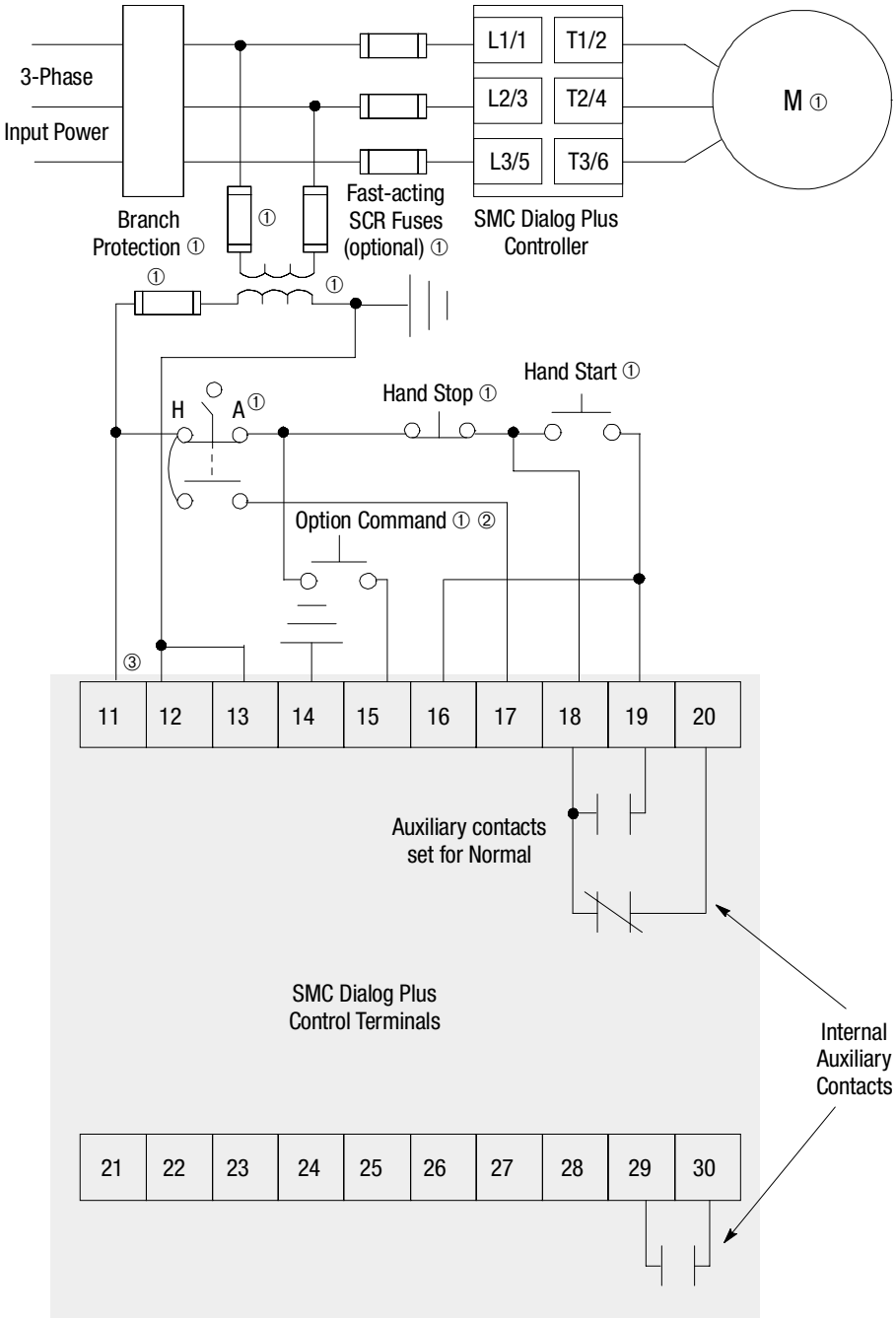

① Customer supplied.

② Slow Speed or Accu-Stop.

③ Refer to the controller nameplate to verify the rating of the control power input voltage.

Preset Slow Speed Option

Figure 7.15 Preset Slow Speed Option Sequence of Operation

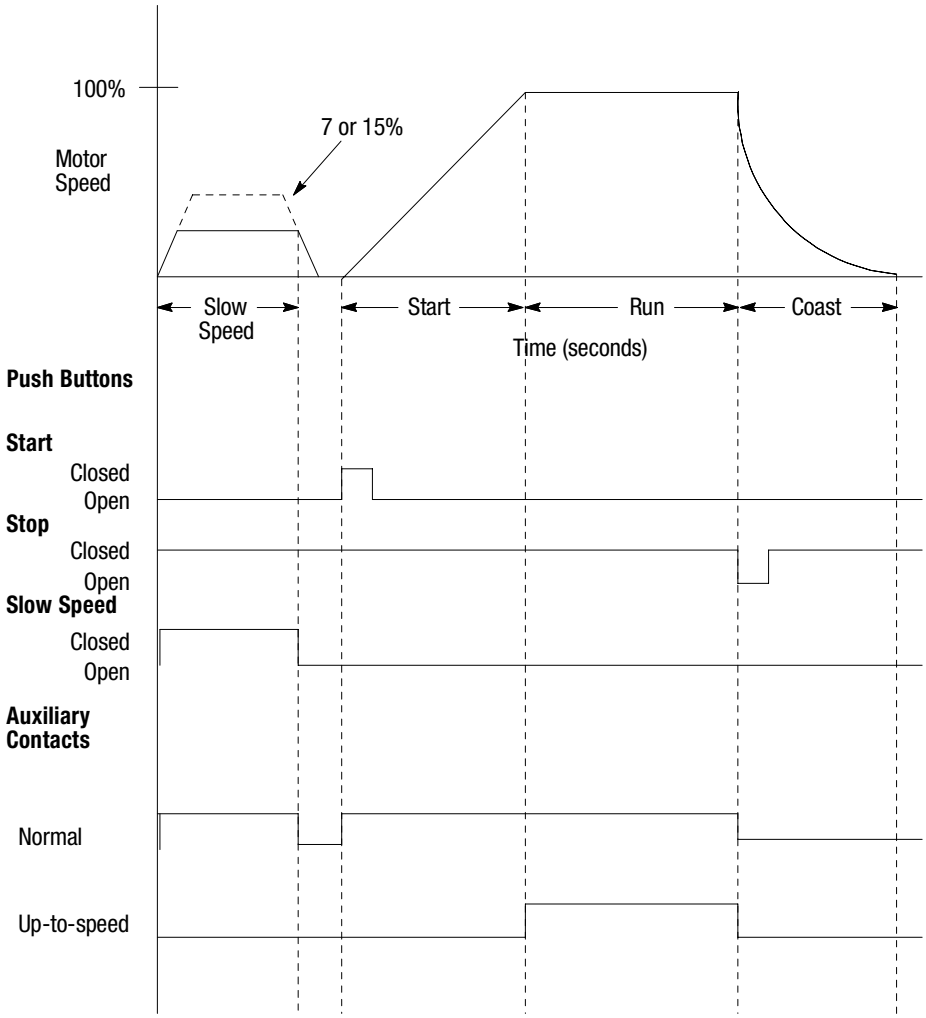

Accu-Stop Option

Figure 7.16 Accu-Stop Option Sequence of Operation

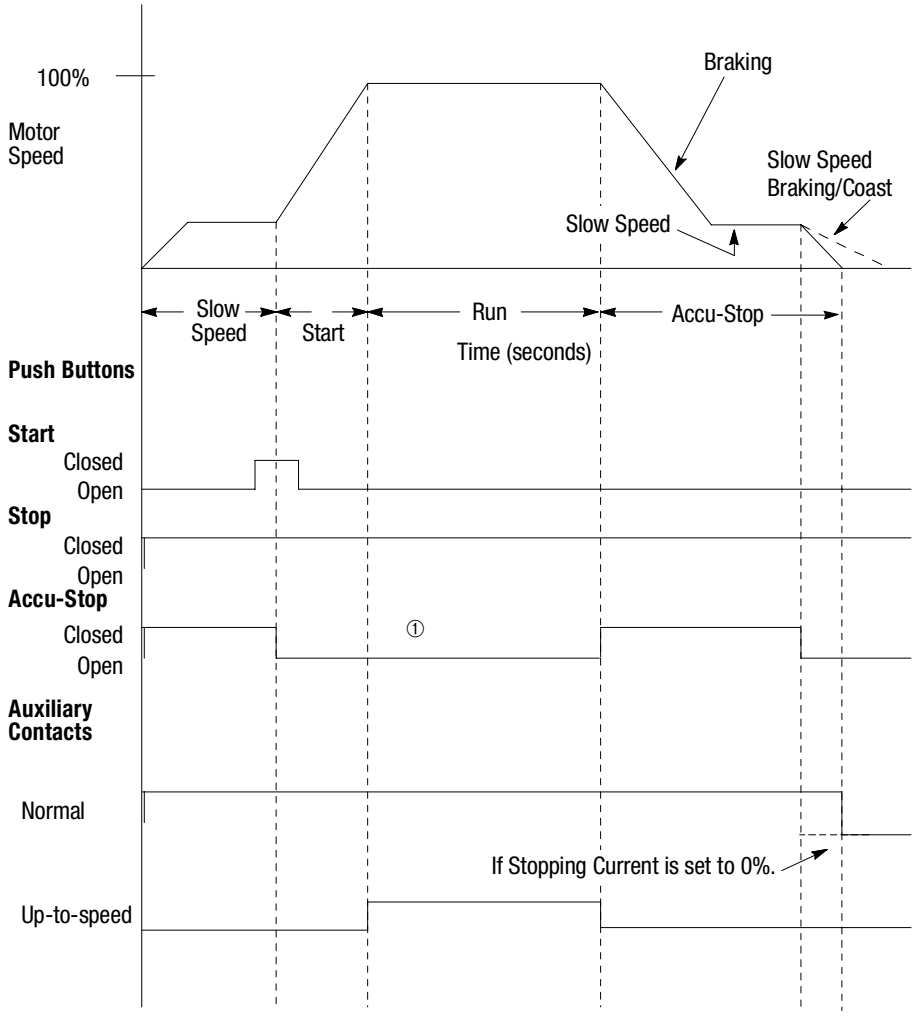

① When Accu-Stop push button is closed, start/stop function is disabled.

ATTENTION: The user is responsible for determining which stopping mode is best suited to the application and will meet applicable standards for operator safety on a particular machine.

Slow Speed with Braking Option

Figure 7.17 through Figure 7.21 show the different wiring for the Slow Speed with Braking option.

Figure 7.17 Typical Wiring Diagram for the Slow Speed with Braking Option

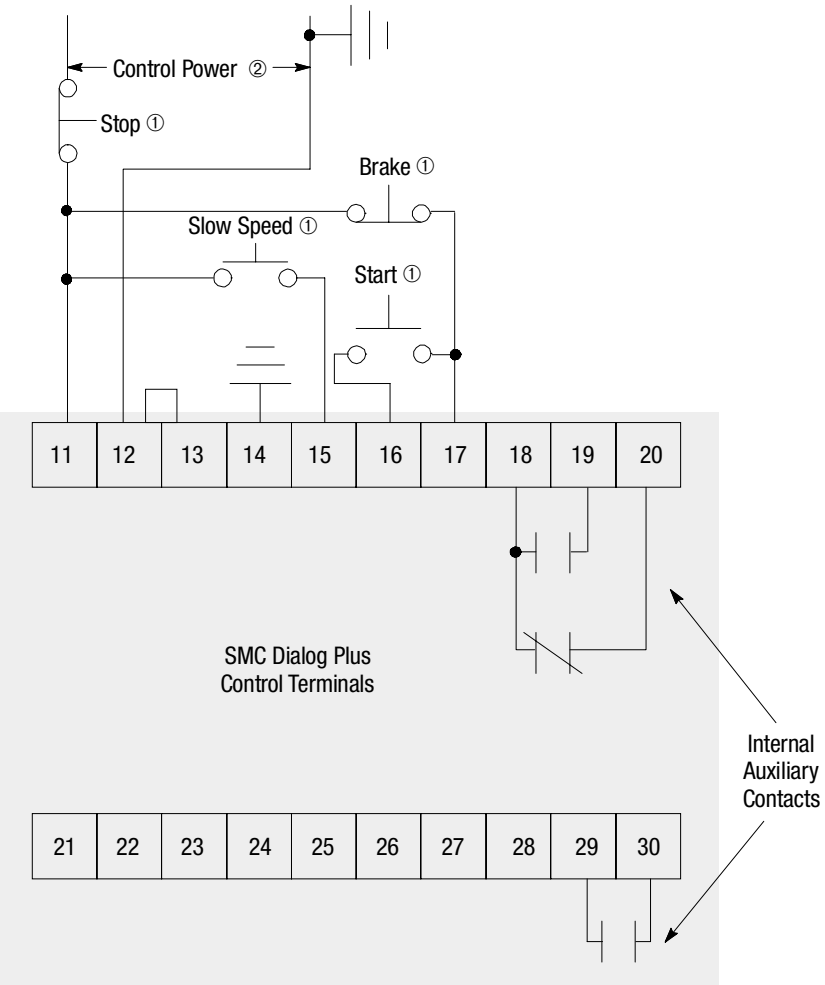

① Customer supplied.

② Refer to the controller nameplate to verify the rating of the control power input voltage.

Note: Refer to Chapter 3 for typical power circuits.

Figure 7.18 Typical Retrofit Wiring Diagram for the Slow Speed with Braking Option

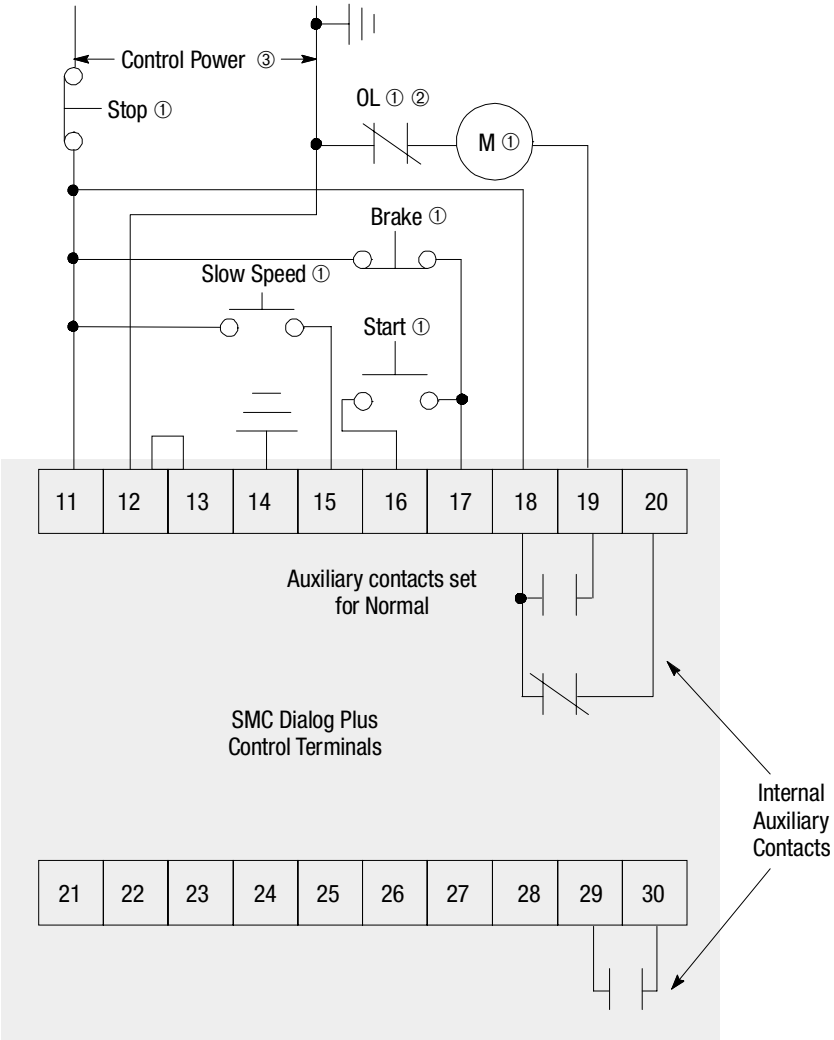

① Customer supplied.

② Overload protection should be disabled in the SMC Dialog Plus controller.

③ Refer to the controller nameplate to verify the rating of the control power input voltage.

Note: Refer to Chapter 3 for typical power circuits.

Figure 7.19 Typical Wiring Diagram for the Slow Speed with Braking Option with an Isolation Contactor

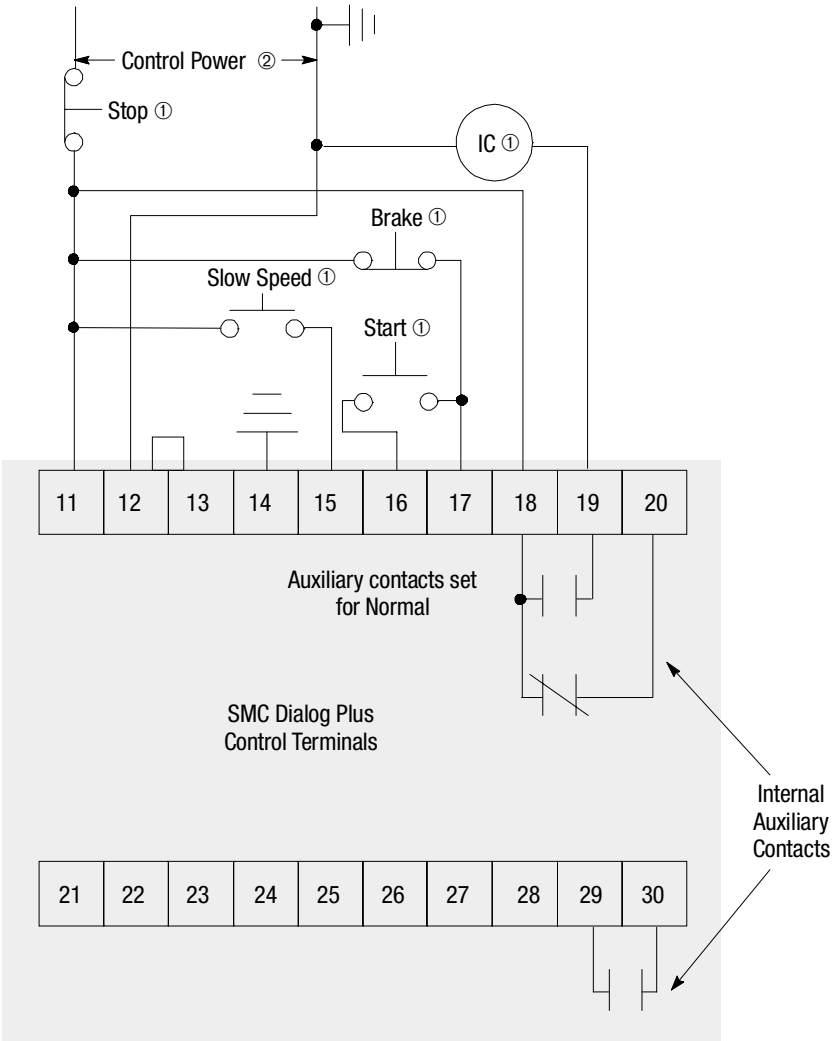

① Customer supplied.

② Refer to the controller nameplate to verify the rating of the control power input voltage.

Note: Refer to Chapter 3 for typical power circuits.

Figure 7.20 Typical Wiring Diagram for the Slow Speed with Braking Option with a Bypass Contactor

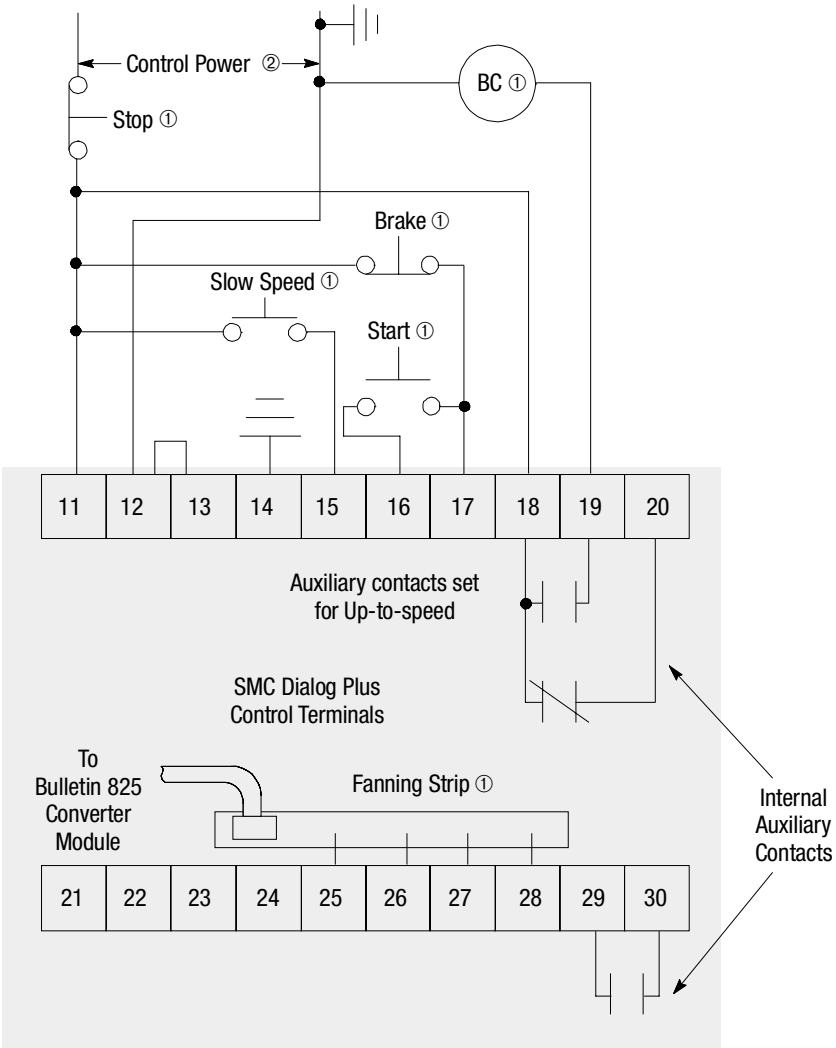

① Customer supplied.

② Refer to the controller nameplate to verify the rating of the control power input voltage.

Note: Refer to Chapter 3 for typical power circuits.

Figure 7.21 Slow Speed with Braking Option Sequence of Operation

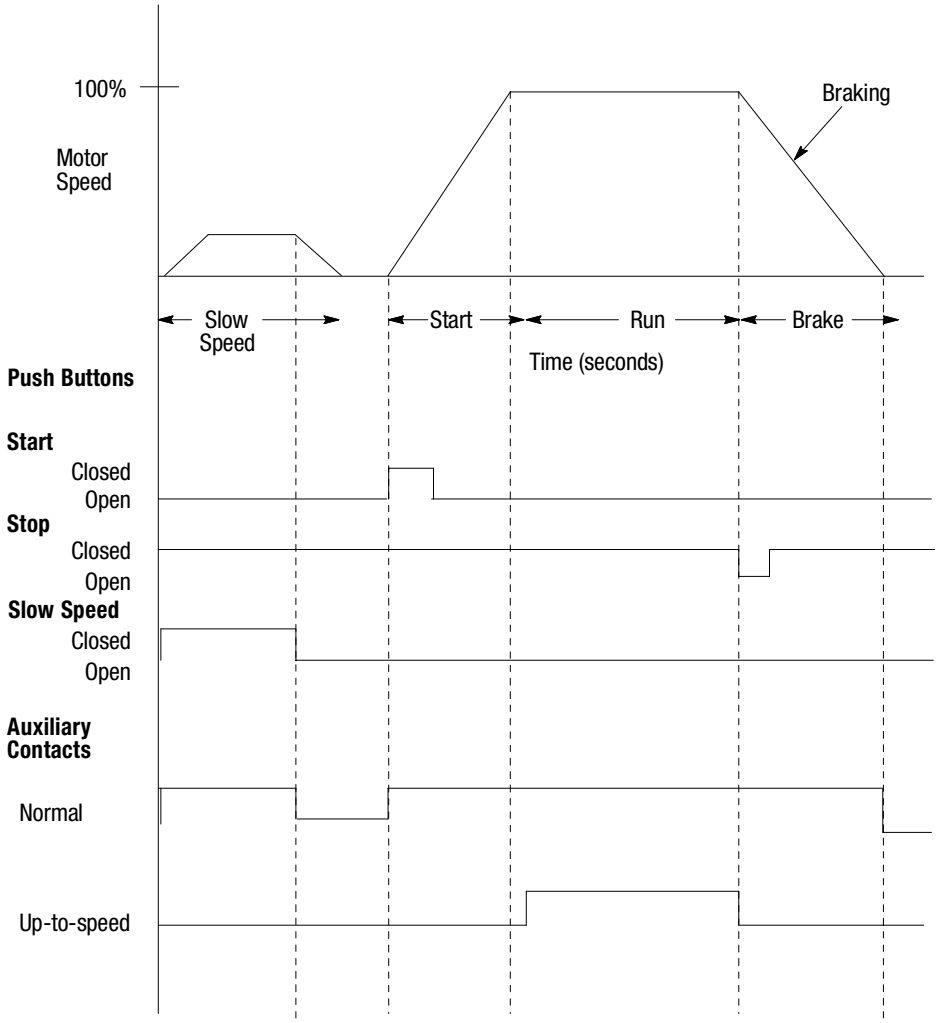

ATTENTION: The user is responsible for determining which stopping mode is best suited to the application and will meet applicable standards for operator safety on a particular machine.

Serial Communications

Overview

The SMC Dialog Plus controller can be started and stopped through programmable logic controllers using an optional communication module. Additionally, parameter data can be read to the logic controller through data transfer. The amount of information that can be transferred from the SMC Dialog Plus controller is determined by the DIP switch settings on the communication module.

Note: Parameter values modified while the motor is operating are not valid until the next start sequence begins.

Logic Control Data

The information in Table 8.A provides the logic control information that can be sent to the SMC Dialog Plus controller through the logic controller's output image table.

Table 8.A Logic Control Data

Logic Bits ①																Description	Definition
15	14	13	12	11	10	9	8	7	6	5	4	3	2	1	0		
															X	Stop ②	1 = Stop 0 = Not Stopped
														X		Start ③	1 = Start 0 = Not Start
													X			Option Command ④	1 = Option Init. 0 = Not Option Init.
												X				Clear Faults ③	1 = Clear Faults 0 = Not Clear Faults
																Bits 4–15 are not used	

① Only one bit may be asserted at any given time.

② The stop bit will take priority in operation when more than one bit is asserted. Other bits will be ignored until the stop bit is reset.

③ A 0 to 1 transition is required for a valid command.

④ Assert the Option Command bit to initiate an option maneuver such as Pump Stop.

Control Wiring

Refer to Figure 3.14 on page 3-10 for the applicable wiring diagram to achieve start-stop control via the SCANport.

Control Enable

Per factory programming, “stop” is the only control command active on the SMC Dialog Plus controller when the SCANport is utilized. To enable motor control from a programmable logic controller through a communication module, follow the programming procedure below.

Description	Action	Display
—	—	STOPPED 0.0 AMPS
1. Press any key to access the Choose Mode function.	ESC SEL ▲ ▼ ↵	CHOOSE MODE _ _ _ _ _
2. Scroll with the Up/Down keys until the Program option appears.	▲ *or* ▼	CHOOSE MODE PROGRAM
3. Press the Enter key to access the Program option.	↵	PROGRAM _ _ _ _ _
4. Scroll with the Up/Down keys to the Linear List option.	▲ *or* ▼	PROGRAM LINEAR LIST
5. Press the Enter key to access the Linear List programming group.	↵	VOLTS PHASE A–B 0 VOLTS 1
6. Scroll with the Up/Down keys to parameter number 85 - Logic Mask.	▲ *or* ▼	LOGIC MASK 0 85
7. Press the Select key to move the cursor to the second line to modify the parameter.	SEL	LOGIC MASK 0 85
8. Press the Up key until the value 4 appears.①	▲	LOGIC MASK 4 85
9. Press the Enter key to accept the new setting.	↵	LOGIC MASK 4 85

① Zero and 4 are the only valid settings.

Note: If a communication module is disconnected from the SMC Dialog Plus controller while control is enabled (Logic Mask = 4), a Comm Fault will occur.

SMC Status Data

The information in Table 8.B provides the SMC Dialog Plus controller status information that can be sent to the logic controller's input image table.

Table 8.B SMC Status Data

Logic Bits																Description	Definition
15	14	13	12	11	10	9	8	7	6	5	4	3	2	1	0		
															X	Enabled ①	1 = Enabled 0 = Not Enabled
														X		Running	1 = Running 0 = Not Running
																Not Used	—
																Not Used	—
											X					Starting	1 = Starting 0 = Not Starting
										X						Stopping	1 = Stopping 0 = Not Stopping
								X								Fault	1 = Faulted 0 = Not Faulted
							X									At Speed	1 = At Speed 0 = Not at Speed
																Bits 9–15 are not used	

① When control power is applied, this bit is always set to 1.

Reference/Feedback

The SMC Dialog Plus controller does not support the analog reference feature of SCANport. The SCANport analog feedback feature, however, is supported. The feedback word will always be equal to Parameter number 4, Current Phase A.

Parameter Listing

Refer to Appendix B, Table B.1 for a complete listing of the SMC Dialog Plus controller's parameters and groups. In addition to the range of adjustments, the parameters' units are provided.

Scale Factor Conversion

The parameter values of the SMC Dialog Plus controller are stored as unscaled numbers. When **reading** parameter data in the PLC/SLC's input image table, divide this number by the scale factor shown in Appendix B, Table B.1 to arrive at the proper value.

When **writing** from the PLC/SLC's output image table to the SMC Dialog Plus controller, the scale factor must be taken into consideration to ensure that the proper value is sent.

Display Unit Equivalents

Some parameter setting options use a text description when viewed from the built-in LCD display or a human interface module. An example is the parameter, Starting Mode, which has the available settings of Soft Start and Current Limit. Table B.2, found in Appendix B provides the required display unit decimal equivalent for use when sending a command from a logic controller to the SMC Dialog Plus controller.

Datalinks

The SMC Dialog Plus controller does not offer Datalinks.

Interfacing

Refer to the appropriate communication module manual for detailed information regarding communication module installation, DIP switch settings, block transfer instructions, and communication module troubleshooting.

Processing Time

The typical time for the SMC Dialog Plus controller to process a single parameter data request (i.e., block transfer) via the SCANport is approximately 100 msec. Keep this value in mind when determining the message length of multiple parameter value read or write operations.

Remote I/O Examples

Example #1 – SLC 500 Controller without Block Transfer

This example demonstrates discreet control of an SMC Dialog Plus controller from an SLC 500 logic controller. Additionally, the SLC controller reads the Current Phase A from the SMC Dialog Plus controller via the analog feedback word. Many of the selections shown are example-specific. Some changes by the user may be necessary to apply the concepts of this example to a specific application.

System Configuration

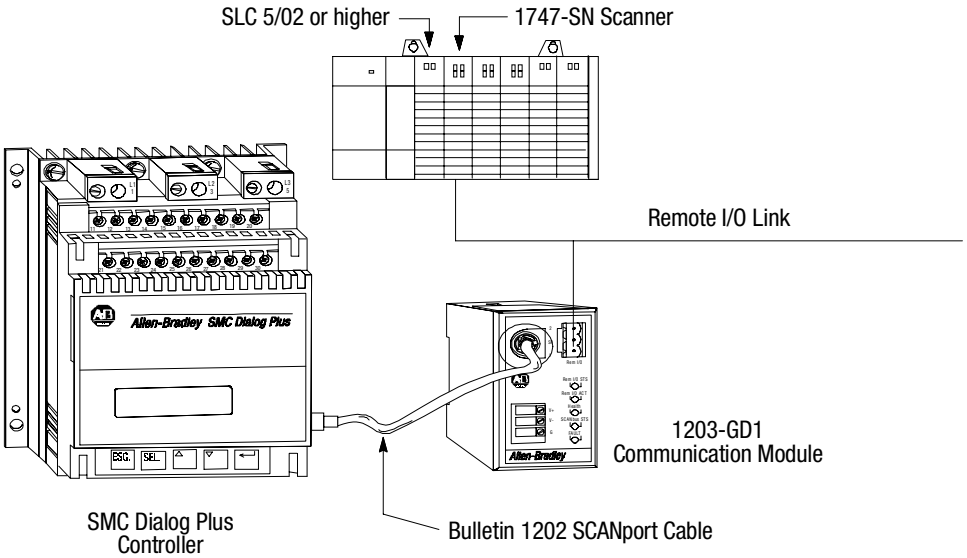

Note: It is critical that during the system design phase that each device on the Remote I/O link is allocated a unique segment of the SLC's I/O image table. This is accomplished by coordination of the devices' rack address, rack size, and starting group address.

Remote I/O Examples (cont.)

1203-GD1 Communication Module Switch Settings

The following information is provided to explain the required 1203-GD1 communication module switch settings for this example. Refer to the 1203-GD1 manuals for further details related to the switch settings.

Example Information

Description		Switch Setting
SMC Rack Address:	02	SW1: Switches 1 & 2 (Not Used), Switches 3-6 & 8 (On), Switch 7 (Off)
Starting Group Address:	0	SW2: Switches 1 & 2 (On)
Last Rack:	No	SW2: Switch 3 (Off)
Hold Last State:	Yes	SW2: Switch 4 (On)
Fault on Comm Loss:	Yes	SW2: Switch 5 (On)
Fault Controller:	No	SW2: Switch 6 (Off)
R I/O Baud Rate:	115k	SW2: Switch 7 (On), Switch 8 (Off)
Block Transfer:	No①	SW3: Switch 1 (Off)
Logic Cmd/Status:	Yes①	SW3: Switch 2 (On)
Reference/Feedback:	Yes①	SW3: Switch 3 (On)
Datalinks:	No①②	SW3: Switch 4-8 (Off)

① This configuration requires a 1/4 rack size allocation.

② The SMC Dialog Plus controller does not support Datalinks.

Switch Settings

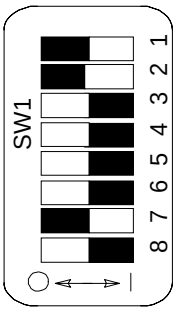

Not Used
Not Used
On
On
On
On
Off
On

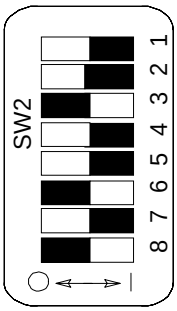

Starting Module Group (0)
Starting Module Group (0)
Last Rack Setting (Off)
Hold Last State (On)
Fault on Comm Loss (On)
Fault Controller (Off)
R I/O Baud Rate (115k)
R I/O Baud Rate (115k)

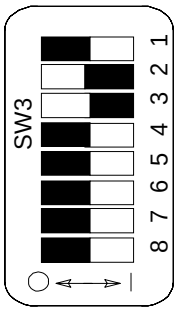

Block Transfer On
Logic Cmd/Sts On
Reference/Fdbk Off
Datalink A Off
Datalink B Off
Datalink C Off
Datalink D Off
Truncate Last Datalink Off

G File Configuration

The SLC system uses G files to configure the R I/O link. G files are configured through the SLC programming software. The configuration is based on the devices connected to the R I/O link. For this example, the following G file configuration map for the scanner's I/O image file of the SMC Dialog Plus controller applies.

Address①	15	Data		0	Description
G1:0	xxxx	xxxx	xxxx	xxxx	Word 0 cannot be edited
G1:1	0000	0001	0000	0000	Logical device address (rack 2, start group 0)
G1:2	0000	0001	0000	0000	Logical image size (1/4 rack)

① Words 3 and 4 do not require configuration since the communication module does not support Complimentary I/O.

I/O Addressing

The 1203-GD1 communication module uses 1-slot addressing. Based on the module switch settings as described above, the discrete I/O can be mapped to the PLC I/O Image as shown below.

SLC I/O Image Table Map

SLC I/O Group Number	Output Image	Input Image
0	Logic Command	Logic Status
1	Reference①	Feedback

① The output image word that maps to the Reference word (O: 1.17, in this example) must have the value 0 to insure proper SMC Dialog Plus controller operation.

Addressing Format

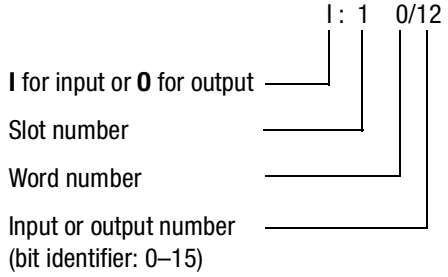

Remote I/O Examples (cont.)

SMC Dialog Plus Controller Logic Control Addresses①

Bit Description	I or O	Slot②	Word③	Bit④	Address
Stop	O	1	16	00	O:1.16/00
Start	O	1	16	01	O:1.16/01
Option Command	O	1	16	02	O:1.16/02
Clear Fault	O	1	16	03	O:1.16/03

SMC Dialog Plus Controller Status Addresses①

Bit Description	I or O	Slot②	Word③	Bit⑤	Address
Enabled	I	1	16	00	I:1.16/00
Running	I	1	16	01	I:1.16/01
Starting	I	1	16	04	I:1.16/04
Stopping	I	1	16	05	I:1.16/05
Fault	I	1	16	07	I:1.16/07
At Speed	I	1	16	08	I:1.16/08

SMC Dialog Plus Controller Feedback Address①

I or O	Slot②	Word③	Address
I	1	17	I:1.17

① The addresses shown are example-specific. Addresses for any given installation can be determined, based upon the 1203-GD1 communication module switch settings for: rack address, starting group number, block transfer, logic command/status, and reference/feedback by applying the I/O addressing format for SLC-500 controllers.

② The 1747-SN scanner resides in slot 1.

③ Based on the 1203-GD1 communication module switch settings (rack 2, starting group 0). Refer to the 1747-SN User Manual, Publication 1747-6.6.

④ Refer to Table 8.A.

⑤ Refer to Table 8.B.

Example #1 - Ladder Logic Program

First Rung: When the Machine START push button is pressed, the SLC sends a START command to the SMC Dialog Plus controller. The SMC Dialog Plus controller will start if no STOP command is being issued by the SLC or any other control device. (The start button is a normally open contact in this example.)

Second Rung: When the Machine STOP push button is pressed, the SLC sends a STOP command to the SMC Dialog Plus controller. (The stop button is a normally closed contact in this example.) The branch provides a logic latched" circuit which exerts the STOP command until the feedback from the SMC Dialog Plus controller indicates that it has received the command and has responded appropriately.

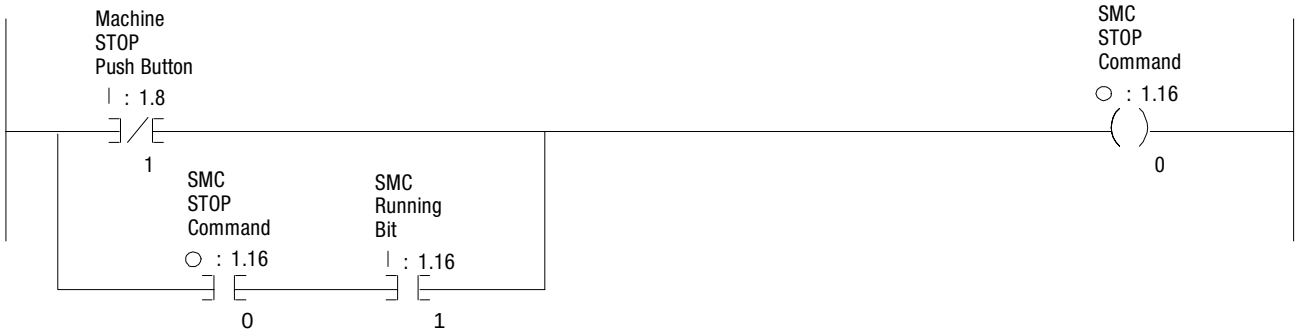

Third Rung: The SMC Dialog Plus controller's Current Phase A value returned by the analog feedback word (I:1.17 in this example) is moved every scan to integer file 7, element 2.

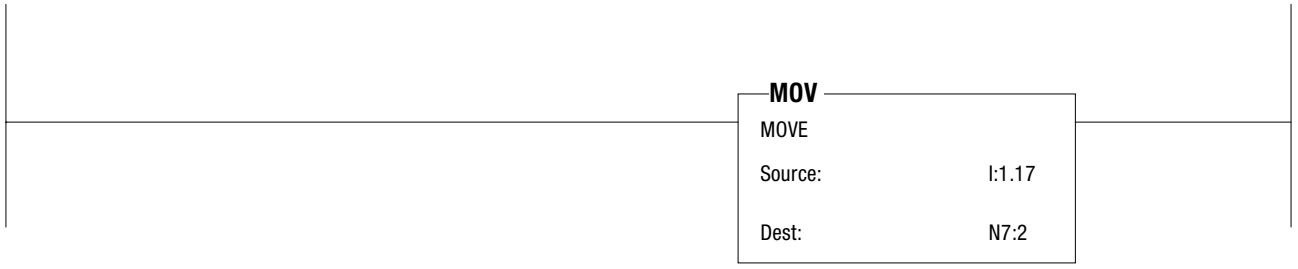

Remote I/O Examples (cont.)

Example #2 - SLC 500 Controller with Block Transfer

This example demonstrates a block transfer of the SMC Dialog Plus controller's metering group (parameters 1–11) to an SLC500. Many of the selections shown are example-specific. Some changes by the user may be necessary to apply the concepts of this example to a specific application.

System Configuration

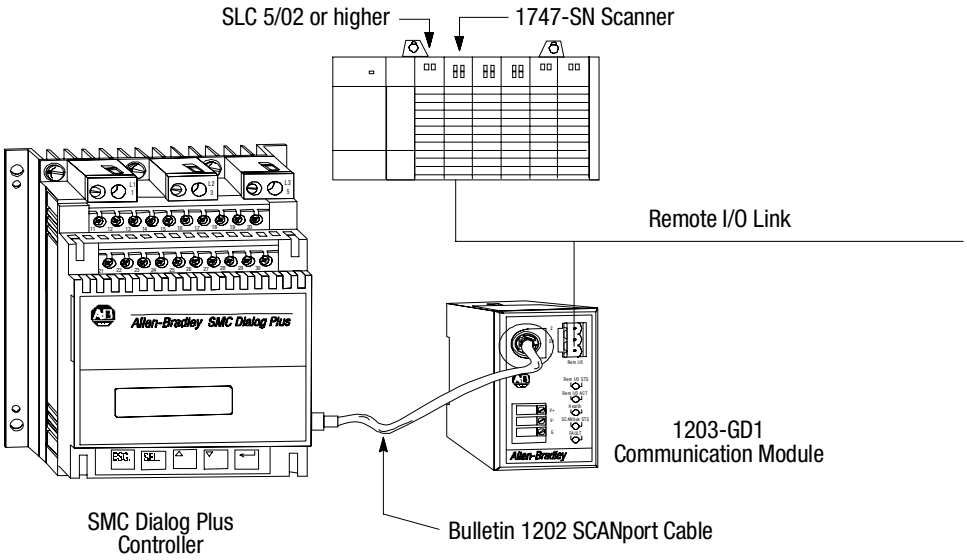

1203-GD1 Communication Module Switch Settings

The following information is provided to explain the required 1203-GD1 communication module switch settings for this example. Refer to the 1203-GD1 manuals for further details related to the switch settings.

Example Information

Description		Switch Setting
SMC Rack Address:	0	SW1, Switches 1 & 2 (Not Used), Switches 3-8 (On)
Starting Group Address:	0	SW2, Switches 1 & 2 (On)
Last Rack:	Yes	SW2, Switch 3 (On)
Hold Last State:	Yes	SW2, Switch 4 (On)
Fault on Comm Loss:	Yes	SW2, Switch 5 (On)
Fault Controller:	Yes	SW2, Switch 6 (On)
RIO Baud Rate:	57k	SW2, Switches 7 & 8 (Off)
Block Transfer:	Yes	SW3, Switch 1 (On)
Logic Cmd/Status:	Yes	SW3, Switch 2 (On)
Reference/Feedback:	No	SW3, Switch 3 (Off)
Datalinks:	No①	SW3, Switches 4-8 (Off)

① The SMC Dialog Plus controller does not support Datalinks

SLC Image Table Map

SLC Word	Output Image	Input Image	Rack Size	Start at Group
0	Block Transfer	Block Transfer	1/4	0 ①
1	Logic Command	Logic Status		

① Set SW2, Switches 1 and 2 to "On."

Switch Settings

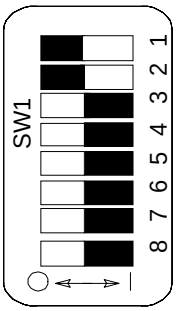

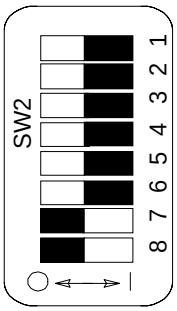

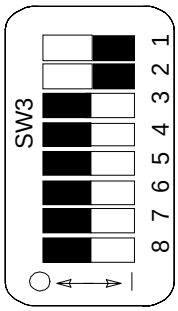

Software Configuration Settings

RIO Configuration Using G Files – The block transfer operation requires that the G File of the 1747-SN scanner module be configured. The scanner's G File settings are based on the devices that you have on the RIO link. It consists of setting logical device starting addresses and the logical device image size of each physical device/ adapter with which the scanner communicates.

The G File is configured as part of the I/O configuration procedure for the processor file. You edit the data offline under the I/O configuration menu only. After the 1747-SN specialty I/O module is assigned to a slot, access the SPIO CONFIG [F9] menu instruction in the Advanced Programming Software (APS). The configuration settings are set as follows:

1. [F5], ADVNCD SETUP to specify input size, output size, scanned input, scanned output, M0 and M1 file sizes.
   This SMC Dialog application example utilizes the following settings:
   Maximum Input Words: 32 (fixed, cannot modify)
   Maximum Output Words: 32 (fixed, cannot modify)
   Scanned Input Words: 32 (default value①)
   Scanned Output Words: 32 (default value①)
   M0 Length: 3300 (size is set for block transfer operation)
   M1 Length: 3300 (size is set for block transfer operation)

① Setting the scanned input and scanned output words to less than 32 can reduce the processor scan time by transferring only part of the input and output image that your application requires. It is important that you do not set either of these values to 0.

Remote I/O Examples (cont.)

2. [F7], G FILE SIZE to specify the number of words required for the I/O module, 3 for standard operation, 5 if using complementary I/O. (In this application example, G File size = 3.)

3. [F6], MODIFY G FILE
   Word 0 of the G File is configured automatically by the processor according to the particular specialty I/O module. Word 0 cannot be edited.

   Word 1, Primary/Normal Logical Device Address — Specifies the logical starting address of each primary/normal RIO link device. The logical address consists of the logical rack number (0, 1, 2, or 3) and starting logical group (0, 2, 4, or 6). Each bit in this word represents a logical address. To specify an address (in binary mode), you place a 1 at the bit corresponding to the starting logical address of each logical device. (For this SMC Dialog example application, Word G1/16 = 1, indicating logical rack 0, starting group 0.)

   Word 2, Primary/Normal Device Logical Image Size — Specifies the logical image size (amount of scanner I/O image) of the devices set in Word 1. As with Word 1, these bits correspond to RIO logical rack and logical group numbers. To specify image size (in binary mode), you place a 1 at each group a device occupies. (This SMC Dialog example is using 1/4 rack size, Word G1/33 = 1.)

   Word 3 and Word 4 refer to Complementary I/O Configuration (if G File size is set to 5), which is not used in this sample application. Please reference the RIO Scanner User Manual (Publication 1747-6.6) and the Advanced Programming Software (APS) User Manual (Publication 1746-6.4) for further information on any of the above settings or operations.

SLC 500 Ladder Logic Program

Terms used:BTBlock Transfer

BTR	Block Transfer Read
BTW	Block Transfer Write

The sample ladder logic program that follows performs a consecutive parameter value read of the SMC Dialog Plus controller's metering group (parameters 1–11) by using a BTW/BTR pair. The BTW operation defines to the Bulletin 1203 communication module the type of parameter read/write operation ("Continuous Parameter Value Read" for this example) and identifies the parameters to be polled. Execution of the BTR operation allows the communication module to respond, providing the requested data.

Notes: (1) The ladder logic program does not contain error checking and handling. Refer to the SLC 500 and 1747-SN scanner manuals for this documentation.
(2) For this example, Allen-Bradley's APS programming software is used.

BT Control Buffer Layout – The following table maps integer files starting at N10:0 with the associated M0 file location as defined in the sample ladder logic program that follows.

BT Control Datafile

Control Flags
BT Length
BT Logical Address①

Address	0	1	2	3	4	5	6	7	8	9
N10:0	②	64	0							

① BT logical address format: logical rack/group/slot (slot is always "0" for the 1203-GD1)
Logical address examples Logical Rack **0**, Group **0**, Slot **0** = **0**
Logical Rack **2**, Group **4**, Slot **0** = **240**

② This word is set by the ladder logic program. Refer to the 1747-SN scanner manual for Control Flag Definitions.

BTW Datafile Format – A four-word data file is required to accomplish a "Continuous Parameter Value Read." For the example that follows, the BTW Datafile will begin at address N10:10.

BTW Datafile

Message Length
PLC Decimal Value
Number of Parameter Values to Read
Starting Parameter Number

Address	0	1	2	3	4	5	6	7	8	9
N10:10	4	1①	11	1						

① This is a fixed value, associated with the "Continuous Parameter Value Read" function.

Data Path for the BTW – Rung 2:6 of the sample ladder logic program that follows executes a COP instruction to the M0 file to load the necessary data for the BTW.

Address	0 1 2 3 4 5 6 7 8 9		Address	0 1 2 3 4 5 6 7 8 9
N10:0		➔	M0:1.100	
N10:10		➔	M0:1.110	
N10:20		➔	M0:1.120	
N10:30		➔	M0:1.130	
N10:40		➔	M0:1.140	
N10:50		➔	M0:1.150	
N10:60		➔	M0:1.160	
N10:70		➔	M0:1.170	

Remote I/O Examples (cont.)

BTR Datafile Format – A BTR Datafile must also be defined to accept the data read during the BTR operation. For this example, the BTR Datafile will begin at address N10:110.

BTR Datafile

Header Word
PLC Decimal Value
Number of Parameter Values to Read
Starting Parameter Number

Address	0	1	2	3	4	5	6	7	8	9
N10:110	15	①	11	1	#1	#2	#3	#4	#5	#6
N10:120	#7	#8	#9	#10	#11					

① Message OK: 1
Message Error: -32767

Note: The values of parameters 1–11 read from the SMC Dialog Plus controller are loaded into addresses N10:114 through N10:124.

Data Path for the BTR – Rung 2:5 of the sample ladder logic program that follows executes a COP instruction to copy the data obtained from the BTR to program-defined integer file.

Address	0 1 2 3 4 5 6 7 8 9		Address	0 1 2 3 4 5 6 7 8 9
M1:1.100		➔	N10:100	
M1:1.110		➔	N10:110	
M1:1.120		➔	N10:120	
M1:1.130		➔	N10:130	
M1:1.140		➔	N10:140	
M1:1.150		➔	N10:150	
M1:1.160		➔	N10:160	
M1:1.170		➔	N10:170	

Example #2 – Ladder Logic Program

Rung 2:0
This rung clears the Virtual BT Command word on the first scan.

Rung 2:1
Copy the BT Status Bits from the 1747-SN into the Virtual BT Status Buffer.

Rung 2:2
This rung sets up the BT buffer for a BTW.

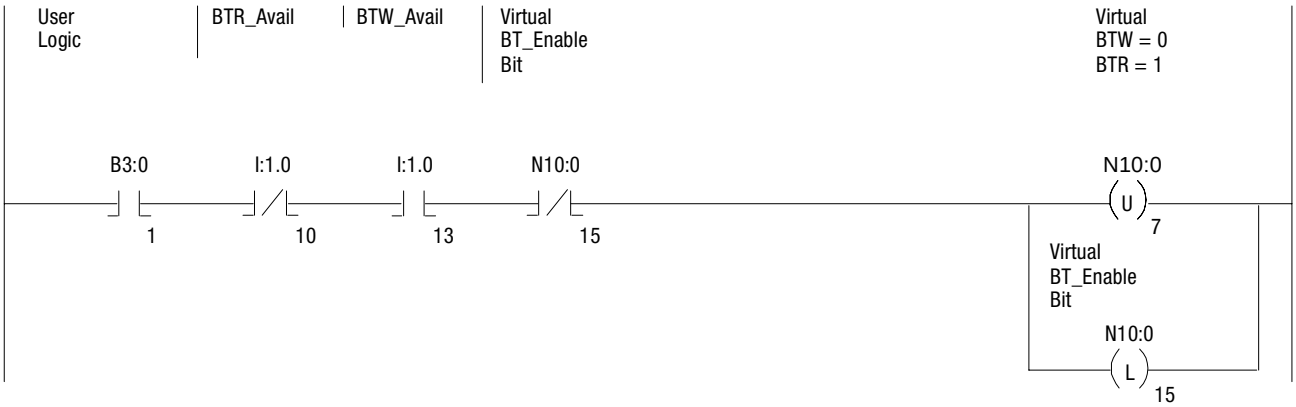

Rung 2:3
This rung turns off the Virtual BT_Enable when a BTW has completed.

Remote I/O Examples (cont.) Example #2 – Ladder Logic Program (cont.)

Rung 2:4
This rung sets up the BT buffer for a BTR and sets the Virtual BT_Enable.

Rung 2:5
This rung copies the BTR data from the 1747-SN, clears the Virtual BT_Enable, and clears the User Logic Bit.

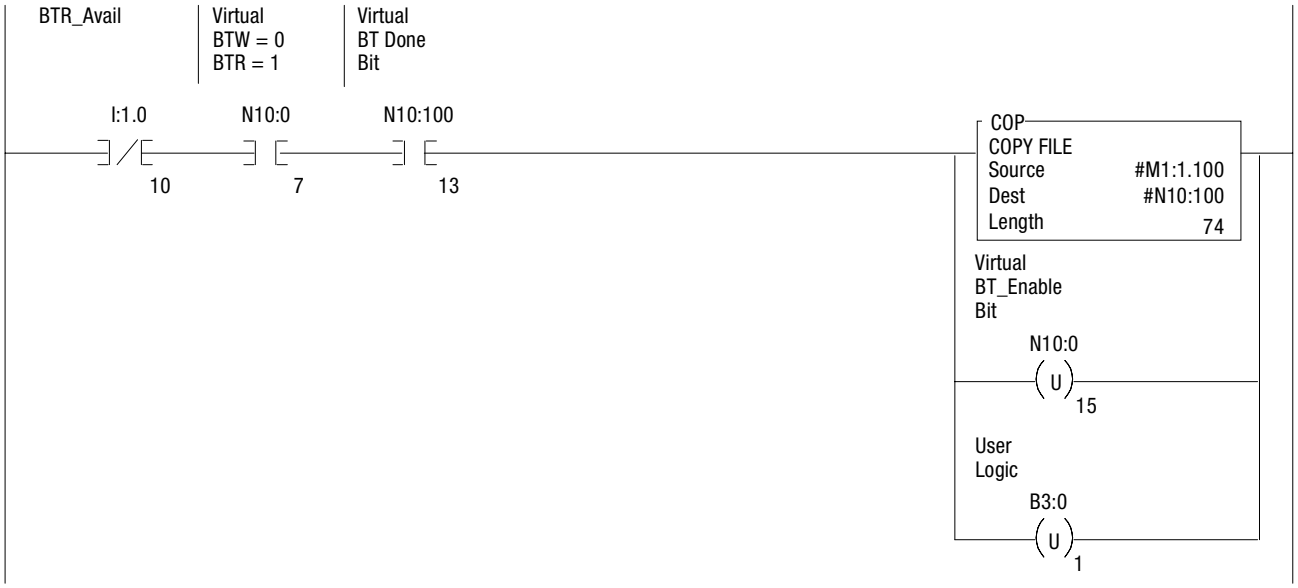

Rung 2:6
This rung copies the BT information to the 1747-SN for execution.

Rung 2:7

The information in the data table listed below was obtained from a 150 Hp motor, 1800 RPM rated at 480 volts. The motor has been operating continuously for a period of 72 hours.

Parameter Description	Parameter Number	Display Value	Parameter Description	Parameter Number	Display Value
Voltage Phase A–B	1	470	Wattmeter	7 ①	90.0
Voltage Phase A–B	2	474	Kilowatt Hours	8	82
Voltage Phase A–B	3	469	Elapsed Time	9	72
Current Phase A	4 ①	120.0	Power Factor	10 ①	.92
Current Phase B	5 ①	120.0	Motor Thermal Usage	11	80
Current Phase C	6 ①	120.0			

① Refer to Appendix B and apply the scale factor to above parameters in the data table below.

Address	Data	(Radix = BINARY)		
B3:0		0000	0000	0000

Address	Data	(Radix = BINARY)									
N10:0		128	64	0	0	0	0	0	0	0	0
N10:10		4	1	11	1	0	0	0	0	0	0
N10:20		0	0	0	0	0	0	0	0	0	0
N10:30		0	0	0	0	0	0	0	0	0	0
N10:40		0	0	0	0	0	0	0	0	0	0
N10:50		0	0	0	0	0	0	0	0	0	0
N10:60		0	0	0	0	0	0	0	0	0	0
N10:70		0	0	0	0	0	0	0	0	0	0
N10:80		0	0	0	0	0	0	0	0	0	0
N10:90		0	0	0	0	0	0	0	0	0	0
N10:100		0	64	0	0	0	0	0	0	0	0
N10:110		15	1	11	1	470	474	469	1200	1200	1200
N10:120		900	82	72	92	80	0	0	0	0	0
N10:130		0	0	0	0	0	0	0	0	0	0
N10:140		0	0	0	0	0	0	0	0	0	0
N10:150		0	0	0	0	0	0	0	0	0	0
N10:160		0	0	0	0	0	0	0	0	0	0
N10:170		0	0	0	0	0	0	0	0	0	0
N10:180		0	0	0	0	0	0	0	0	0	0
N10:190		0	0	0	0	0	0	0	0	0	0
N10:200		0									

M0:1	File Length: 3300
M0:2	File Length: 0
M0:3	File Length: 0
M0:4	File Length: 0

M1:1	File Length: 3300
M1:2	File Length: 0
M1:3	File Length: 0
M1:4	File Length: 0

Address	Data	(Radix = BINARY)		
G1:0		2020	0001	000F

Remote I/O Examples (cont.)

Example #3 – PLC 5/20, 5/40, 5/60, and 5/80

This example demonstrates PLC control of an SMC Dialog Plus controller with the Pump Control option. Use of the Option Command bit to initiate the pump stop maneuver is also shown. Finally, the SMC fault bit is monitored as a conditional logic input for the block transfer of the associated fault code stored in the SMC Dialog Plus controller's Parameter 19, Fault Buffer #1. Many of the selections shown are example-specific. Some changes by the user may be necessary to apply the concepts of this example to a specific application.

System Configuration

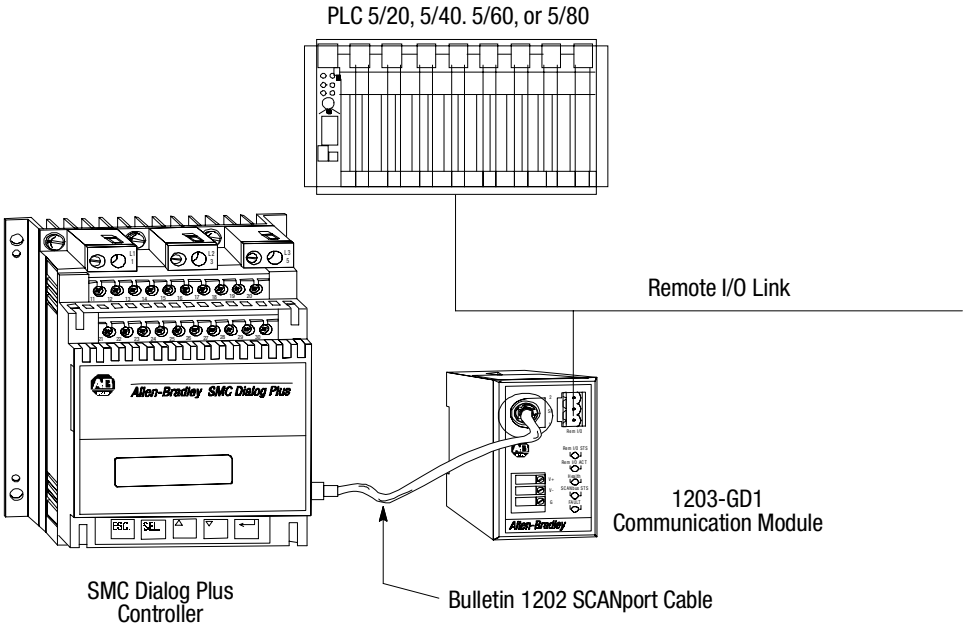

Note: It is critical that during the system design phase that each device on the Remote I/O link is allocated a unique segment of the PLC's I/O image table. This is accomplished by coordination of the devices' rack address, rack size, and starting group address.

1203-GD1 Communication Module Switch Settings

The following information is provided to explain the required 1203-GD1 communication module switch settings for this example. Refer to the 1203-GD1 manuals for further details related to the switch settings.

Example Information

Description		Switch Setting
SMC Rack Address:	02	SW1: Switches 1 & 2 (Not Used), Switches 3-6 & 8 (On), Switch 7 (Off)
Starting Group Address:	0	SW2: Switches 1 & 2 (On)
Last Rack:	No	SW2: Switch 3 (Off)
Hold Last State:	Yes	SW2: Switch 4 (On)
Fault on Comm Loss:	Yes	SW2: Switch 5 (On)
Fault Controller:	No	SW2: Switch 6 (Off)
R I/O Baud Rate:	115k	SW2: Switch 7 (On), Switch 8 (Off)
Block Transfer:	Yes①	SW3: Switch 1 (On)
Logic Cmd/Status:	Yes①	SW3: Switch 2 (On)
Reference/Feedback:	No①	SW3: Switch 3 (Off)
Datalinks:	No①②	SW3: Switch 4-8 (Off)

① This configuration requires a 1/4 rack size allocation.

② The SMC Dialog Plus controller does not support Datalinks.

Switch Settings

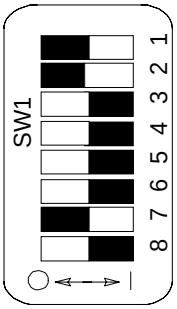

Not Used
Not Used
On
On
On
On
Off
On

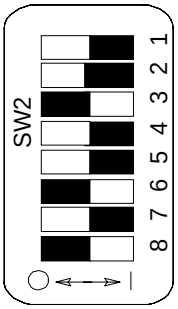

Starting Module Group (0)
Starting Module Group (0)
Last Rack Setting (Off)
Hold Last State (On)
Fault on Comm Loss (On)
Fault Controller (Off)
R I/O Baud Rate (115k)
R I/O Baud Rate (115k)

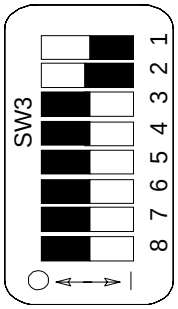

Block Transfer On
Logic Cmd/Sts On
Reference/Fdbk Off
Datalink A Off
Datalink B Off
Datalink C Off
Datalink D Off
Truncate Last Datalink Off

I/O Addressing

The 1203-GD1 communication module uses 1-slot addressing. Based on the module switch settings as described above, the discrete I/O can be mapped to the PLC I/O Image as shown below.

PLC I/O Group Number	Output Image	Input Image
0	Block Transfer	Block Transfer
1	Logic Command	Logic Status

Remote I/O Examples (cont.)

Addressing Format

I : 02 0/12

I for input or **O** for output

2-digit I/O rack number

I/O group number (0–7)

Input or output number
(octal bit address: 0–7, 10–17)

Communication Module Block Transfer Status Word Addresses①

Bit Description	I or O	Rack	Group	Bit②	Address
Block Transfer Ready (BT_READY)	I	02	0	10	I:020/10
Block Transfer Write in Progress (BTW_IN_PROG)	I	02	0	11	I:020/11
Block Transfer Read Available (BTR_AVAIL)	I	02	0	12	I:020/12
Block Transfer Wait (BT_WAIT)	I	02	0	13	I:020/13
Block Transfer Error (BT_ERROR)	I	02	0	14	I:020/14
Block Transfer Write Available (BTW_AVAIL)	I	02	0	15	I:020/15

SMC Dialog Plus Controller Logic Control Addresses①

Bit Description	I or O	Rack	Group	Bit③	Address
Stop	O	02	1	00	O:021/00
Start	O	02	1	01	O:021/01
Option Command	O	02	1	02	O:021/02
Clear Fault	O	02	1	03	O:021/03

SMC Dialog Plus Controller Status Addresses①

Bit Description	I or O	Rack	Group	Bit④	Address
Enabled	I	02	1	00	I:021/00
Running	I	02	1	01	I:021/01
Starting	I	02	1	04	I:021/04
Stopping	I	02	1	05	I:021/05
Fault	I	02	1	07	I:021/07
At Speed	I	02	1	10⑤	I:021/10

① The addresses shown are example-specific. Addresses for any given installation can be determined, based upon the 1203-GD1 communication module switch settings for: rack address, starting group number, block transfer, logic command/status, and reference/feedback by applying the I/O addressing format for PLC-5 controllers.

② Refer to Figure 3.1 of the Bulletin 1203 Remote I/O Communication Module.

③ Refer to Table 8.A.

④ Refer to Table 8.B.

⑤ This is the octal address representation for this bit.

Block Transfer Instructions

Block transfer operations with the 1203-GD1 communication module require coordinated block transfer write (BTW) and block transfer read (BTR) instructions to achieve successful data transmissions.

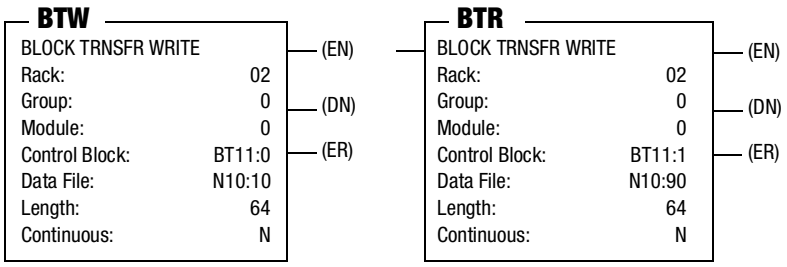

Rack – The number reported here should correspond to the communication module's rack assignment as selected via DIP switch group one (SW1).

Group – The number reported here should correspond to the communication module's starting group address via DIP switch group two (SW2), switches 1 and 2.

Module – In all cases (with regards to the 1203-GD1 communication module) the number 0 should be reported here.

Control Block① – For this example a block transfer file type (BT) of one element is used for the control block. An integer file (type N) of five contiguous words could also be used.

Data File① – The first word of the data file (integer, Type N) selected for the BTW or BTR block is reported here.

Length – The block transfer message length (number of words) is reported here.

① It is critical that care is given to all file assignments to ensure that no overlapping or overwriting occurs.

Remote I/O Examples (cont.)

Block Transfer Datafiles

The tables below provide the necessary data file configuration for a parameter value read of the SMC Dialog Plus controller's Fault Buffer #1.

BTW Datafile:

Message Length
PLC Decimal Value
Parameter Number

Address	0	1	2	3	4	5	6	7	8	9
N10:10	3	769①	19							

① This is a fixed value, associated with the Parameter Value Read function.

BTR Datafile:

Header Word 1
PLC Decimal Value
Parameter Number
Parameter Value

Address	0	1	2	3	4	5	6	7	8	9
N10:10	6①	②	1	③						

① There is no significance to the number returned to Header Word 1.

② Message OK: 769
Message Error: -31999

③ If a message error occurs, the error code will be presented here. See Table 5.A of the Bulletin 1203 Remote I/O Communication Module Reference Manual, Publication 1203-5.0, for a listing of the error codes and descriptions.

Example #3 Ladder Logic Program

First Rung: When the Machine START push button is pressed, the PLC sends a START command to the SMC Dialog Plus controller. The SMC Dialog Plus controller will start if no STOP command is being issued by the PLC or any other control device. (The start button is a normally open contact in this example.)

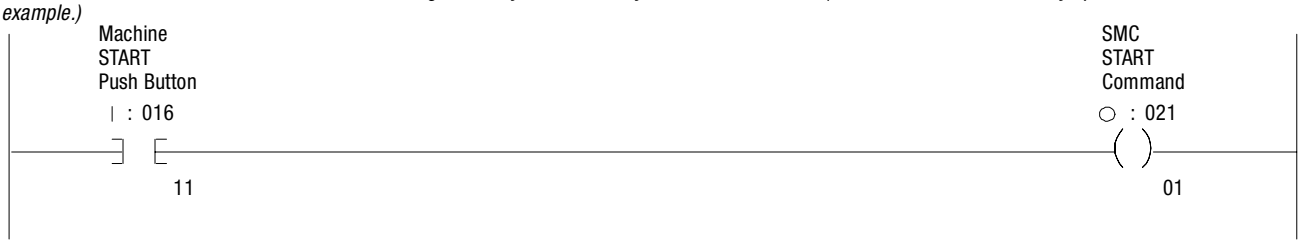

Second Rung: When the Machine STOP push button is pressed, the PLC sends an OPTION command ("pump stop" in this example) to the SMC Dialog Plus controller. (The stop button is a normally closed contact in this example.) The branch provides a logic "latched" circuit which exerts the OPTION command until the feedback from the SMC Dialog Plus controller indicates that it has returned to a "stopped" status (not running).

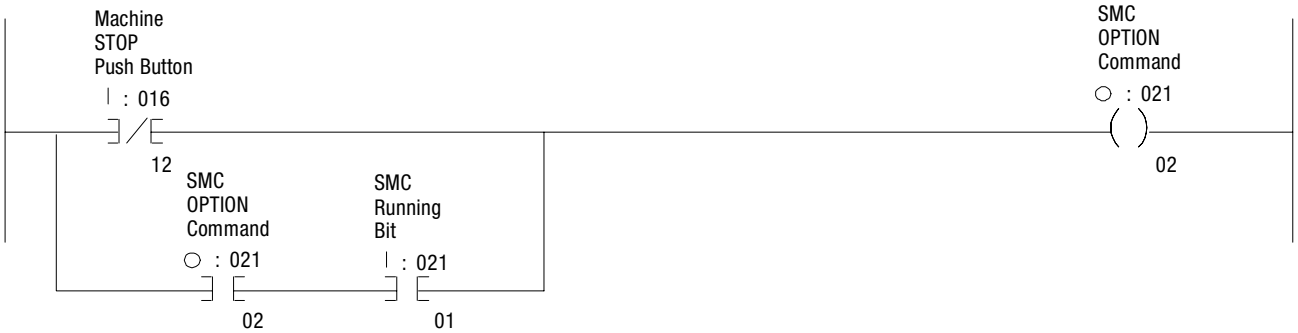

Third Rung: The SMC Fault Bit initiates a PLC block transfer write to the communication module, requesting a parameter value read (SMC Dialog Plus controller Parameter 19, Fault Buffer #1, in this example).

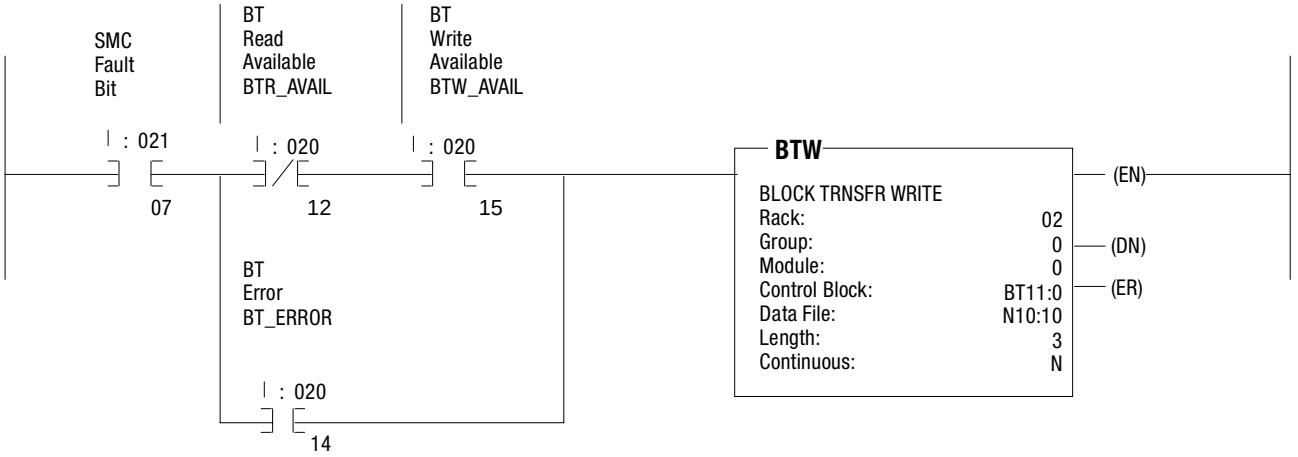

Fourth Rung: A block transfer read occurs whenever the communication module's BT Read Available status bit is true, in this example, the communication module responds to the PLC request (BTW in the third rung) by supplying the value stored in Parameter 19.

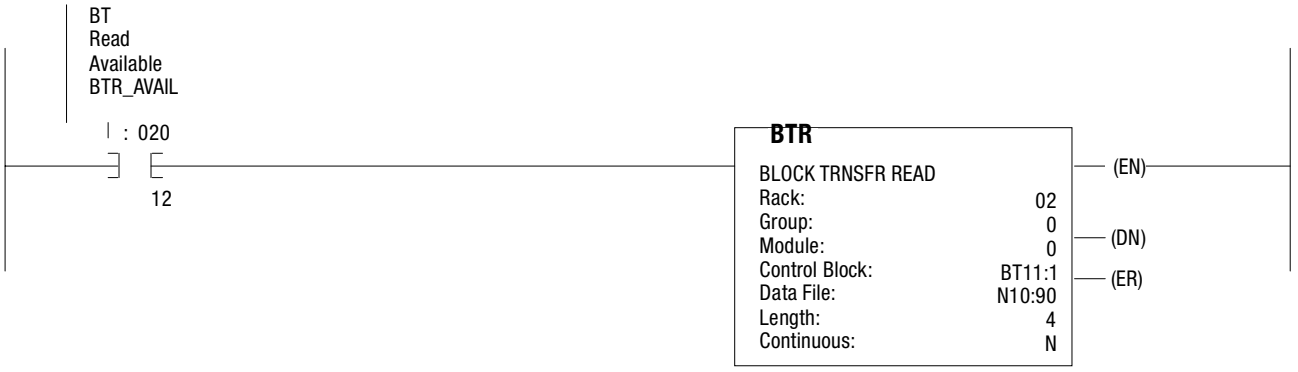

DeviceNet Examples

Example #1 SLC 500 Controller with Explicit Messaging

This example demonstrates discreet control of the SMC Dialog Plus controller in addition to use of the explicit messaging function for transferring parameter data to an SLC500. The DeviceNet Manager (revision 3.001) software is used in this example for network and node configuration. RSView™ is used as the man-machine interface in this example. Many of the selections shown are example-specific. Some changes by the user may be necessary to apply the concepts of this example to a specific application.

System Configuration

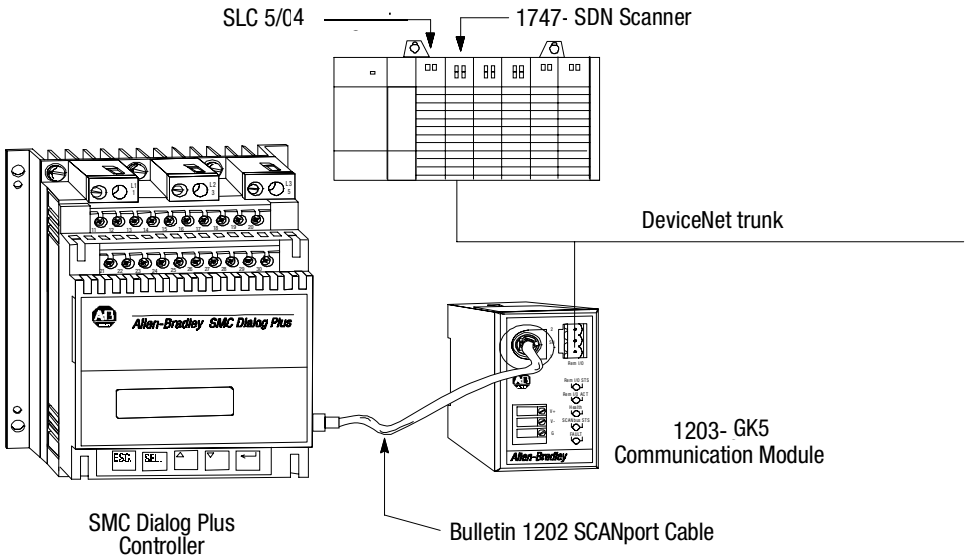

Notes: 1) 1747-SDN scanner firmware revision 3.01 or later required.
2) 1203-GK5 module firmware revision 1.9 or later required.

1203-GK5 Communication Module Switch Settings

The following information is provided to explain the required 1203-GK5 communication module switch settings for this example. Refer to the 1203-GK5 manual for further details related to the switch settings.

Example Information

Description		Switch Setting
Node Address:	13	SW2, Switches 1, 3 & 4 (On) Switches 2, 5 & 6 (Off)
Data Rate:	125k	SW2, Switches 7 & 8 (Off)
Datalinks:	No ①	SW1, Switches 1 - 4 (Off)
Zero data to logic command on fault:	Yes	SW1, Switch 6 (Off)
Fault on comm loss:	Yes	SW1, Switch 7 (Off)
Fault on PLC/SLC program/idle modes:	Yes	SW1, Switch 8 (Off)

① The SMC Dialog Plus controller does not support Datalinks.

Switch Settings

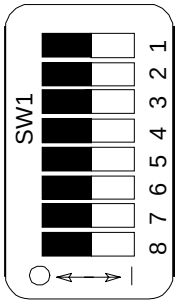

Disabled Datalink A (Off)
Disabled Datalink B (Off)
Disabled Datalink C (Off)
Disabled Datalink D (Off)
Not Used (Off)
Zero Data (Off)
Fault on Comm Loss (Off)
Fault on Program/Idle (Off)

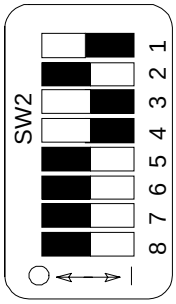

Node Address 13 (On)
Node Address 13 (Off)
Node Address 13 (On)
Node Address 13 (On)
Node Address 13 (Off)
Node Address 13 (Off)
Data Rate = 125k (Off)
Data Rate = 125k (Off)

I/O Mapping

The SMC Dialog Plus controller's first two words of data are pre-configured in the 1203-GK5 communication module as follows:

Word	Output Data	Input Data
1	Logic Command	Logic Status
2	Reference ①	Feedback ②

① The SMC Dialog Plus controller does not utilize this feature; a value of zero should be given.

② The feedback word is the value of parameter 4, Current Phase A.

After you have your network “project” configured in the DeviceNet Manager software, perform a Network Who; the following screen will appear:

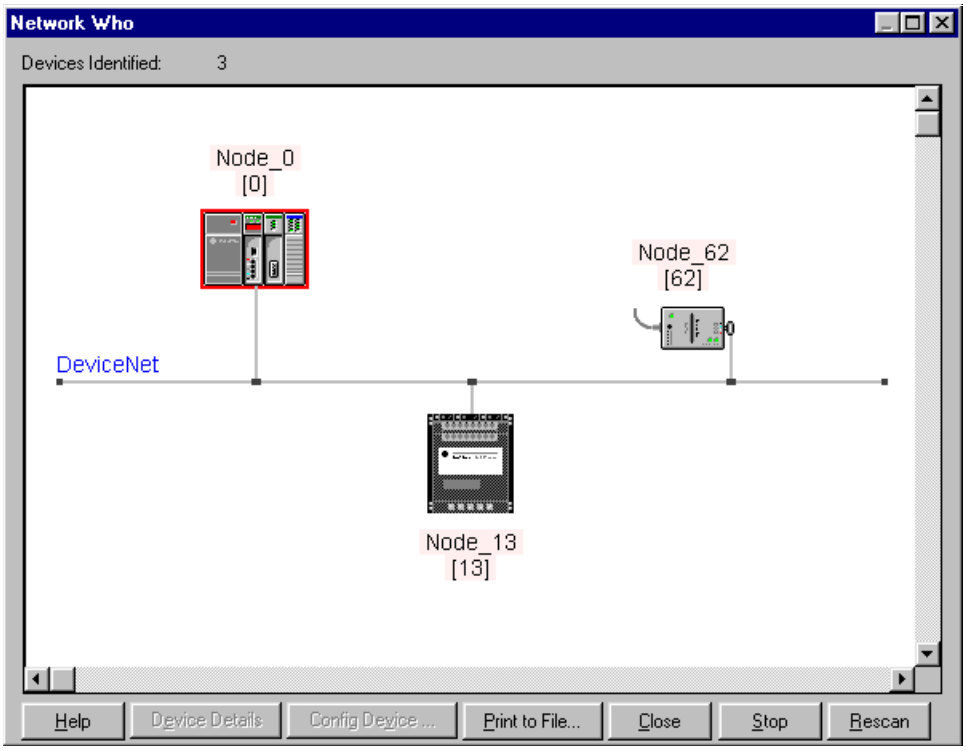

Notice that the SMC Dialog Plus controller is identified as node 13, which was configured by setting the DIP switches on the 1203-GK5 communication module.

Double-click the Master (node 0) on the DeviceNet network; the following screen will appear:

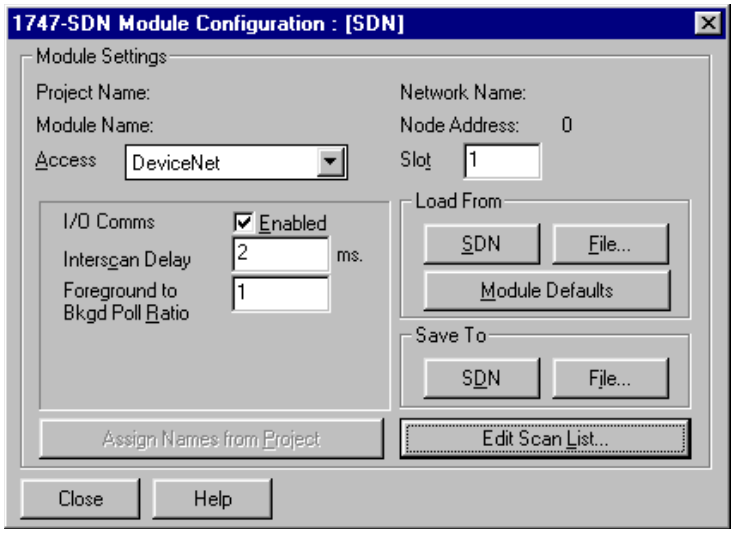

Select the **Edit Scan List** option by clicking on the button; the following screen will appear:

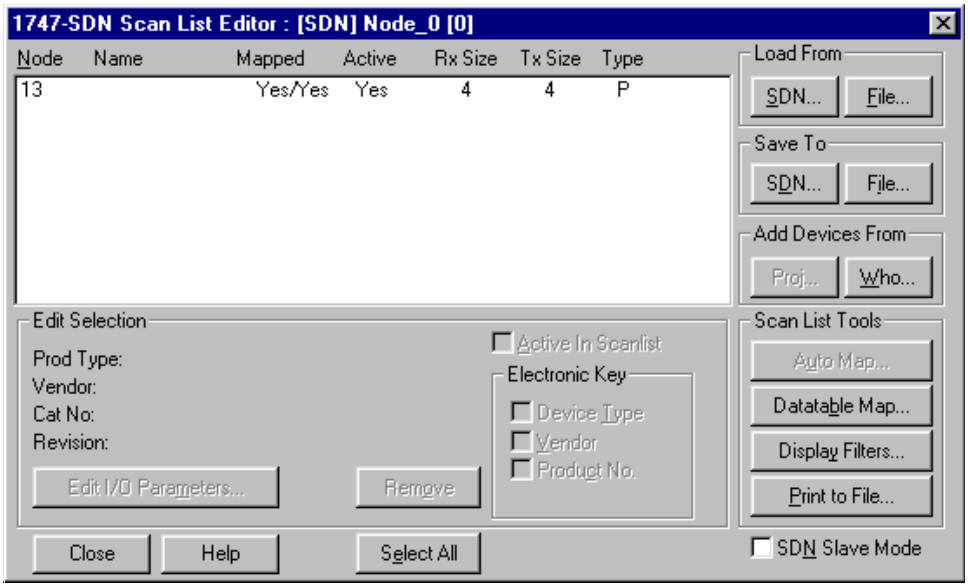

Notice that the SMC Dialog Plus controller (node 13) has an “active” status. This means that it is active in the scan list and will communicate with the 1747-SDN scanner on the network.

You will also notice that “Yes” is listed twice under the Mapped column. The left Yes indicates that input data is mapped from the SMC Dialog Plus controller to the SLC-500. The right Yes indicates that output data from the SLC-500 is mapped to the SMC Dialog Plus controller. Configure the 1747-SDN if “No” is displayed.

To view the actual areas inside the SLC-500 processor where the device data will be transferred to and from, select the **Datatable Map** by clicking on the button; the following screen will appear:

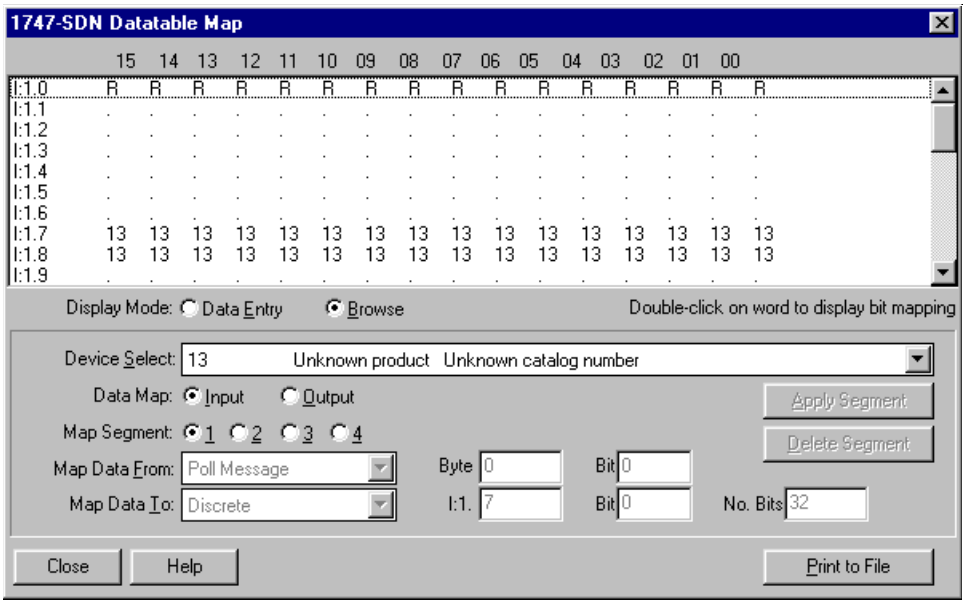

This indicates that the SMC Dialog Plus controller's input data is mapped to words 7 and 8.

By clicking the radio button next to **Output**, the output data mapping can be seen; the following screen will appear:

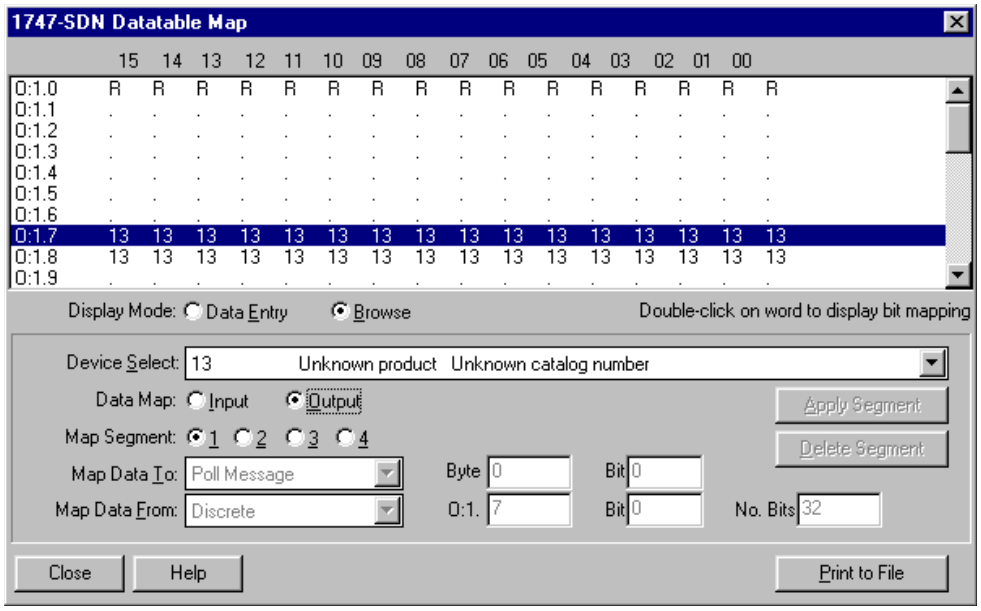

This indicates that the SLC-500's output data associated with the SMC Dialog Plus controller is mapped to words 7 and 8.

Given this data table mapping, following are the individual logic command and status bit addresses for the SMC Dialog Plus controller:

SMC Dialog Plus Controller Logic Command Addresses①

Bit Description	Address
Stop	0:1.7/00
Start	0:1.7/01
Option Command	0:1.7/02
Clear Fault	0:1.7/03

① Refer To Table 8.A

SMC Dialog Plus Controller Status Addresses②

Bit Description	Address
Enabled	I:1.7/00
Running	I:1.7/01
Starting	I:1.7/04
Stopping	I:1.7/05
Fault	I:1.7/07
At Speed	I:1.7/08

② Refer To Table 8.B

Explicit Messaging:

The 1747-SDN scanner module uses the M0 and M1 file areas for data transfer. Words 224 through 256 **must** be used to execute the Explicit Message Request and Response functions. The minimum data size for an Explicit Message Request is 6 words and the maximum is 32 words. Following is the data format to follow for a scattered parameter value read (Get Attribute Multiple) as used in this example:

Explicit Message Request (Get Attribute Multiple)

15	0	
TXID	COMMAND	word 0
PORT	SIZE	
SERVICE	MAC ID	
CLASS		
INSTANCE		
ATTRIBUTE		
PARAMETER		
DATA PLACE HOLDER		
“		word 31

Explicit Message Response (Get Attribute Multiple)

15	0	
TXID	STATUS	word 0
PORT	SIZE	
SERVICE	MAC ID	
PARAMETER		
DATA		
“		word 31

Transmission ID (TXID): The scanner uses this value to track the transaction to completion, and returns the value with the response that matches the request downloaded by the SLC-500 processor. The TXID data size is one byte.

Command: This code instructs the scanner how to administer the request. A listing of these codes can be found in the 1747-SDN User Manual, Publication 1747-5.8. The Command data size is one byte.

Status: The Status code provides the communication module’s status and its response.

Port: The physical channel of the scanner where the transaction is to be routed. The port setting can be zero (channel A) or one (channel B). The Port data size is one byte.

Size: This identifies the size of the transaction body in bytes. The transaction body begins at word 3. The maximum size is 58 bytes. The Size data size is one byte.

Service: This code specifies the type of request being delivered. The Service data size is one byte.

Mac ID: The DeviceNet network node address of the device for which the transaction is intended is identified here. The slave device must be listed in the scanner module’s scan list and be on-line for the Explicit Message transaction to be completed.

Class: The desired DeviceNet class is specified here. The Class data size is one word.

Instance: This code identifies the specific instance within the object class towards which the transaction is directed. The value zero is reserved to denote that the transaction is directed towards the class itself versus a specific instance within the class.

Attribute: This code identifies the specific characteristic of the object towards which the transaction is directed. The Attribute data size is one word.

Examples

The following table lists the most common codes for each given transaction type:

Transaction Type	Service ①	Class ①	Instance ①	Attribute ①
Single Parameter Read	0E	0F	Par. # ②	1
Single Parameter Write	10	0F	Par. # ②	1
Scattered Parameter Read	32	93	0	0
Scattered Parameter Write	34	93	0	0

① The numerical values are in a hexidecimal format.

② This is the actual parameter number as listed in Appendix B of this manual.

Sequence of Events:

Use the following sequence of events as a guide for establishing explicit messages in your SLC ladder logic:

1. Put the Explicit Message Request data into an integer (N) file of the SLC-500 processor.
2. Use the file copy instruction (COP) to copy the Explicit Message Request data entered in step one to the M0 file, words 224 through 256.
3. Use the examine-if-closed instruction (XIC) to monitor bit 15 of the scanner's Module Status Register for an indication that it has received a response from the 1203-GK5 communication module.
4. Copy the data from the M1 file, words 224 through 256, into a file in the SLC-500 processor using the file copy instruction (COP).
5. Use the move instruction (MOV) to copy a one-word file from the SLC-500 processor into word 224 of the M0 file. The upper byte of the word should contain the TXID value for this transaction and the lower byte should contain the value 4 which is the command for the scanner to clear its response buffer. After the move is completed, bit 15 of the scanner's Module Status Register should go to a value of zero, allowing the next explicit message to be executed.

Setting Up the Data File:

In this example, the data file for the Explicit Message Request begins at N11:0. Following is the structure for a Get Attribute Multiple of the SMC Dialog Plus controller's Metering group parameters (1 - 11). Please note that the data shown is in a hexadecimal format. The first three words are shown segmented into two bytes, corresponding to the upper and lower bytes shown in the Explicit Message Request table.

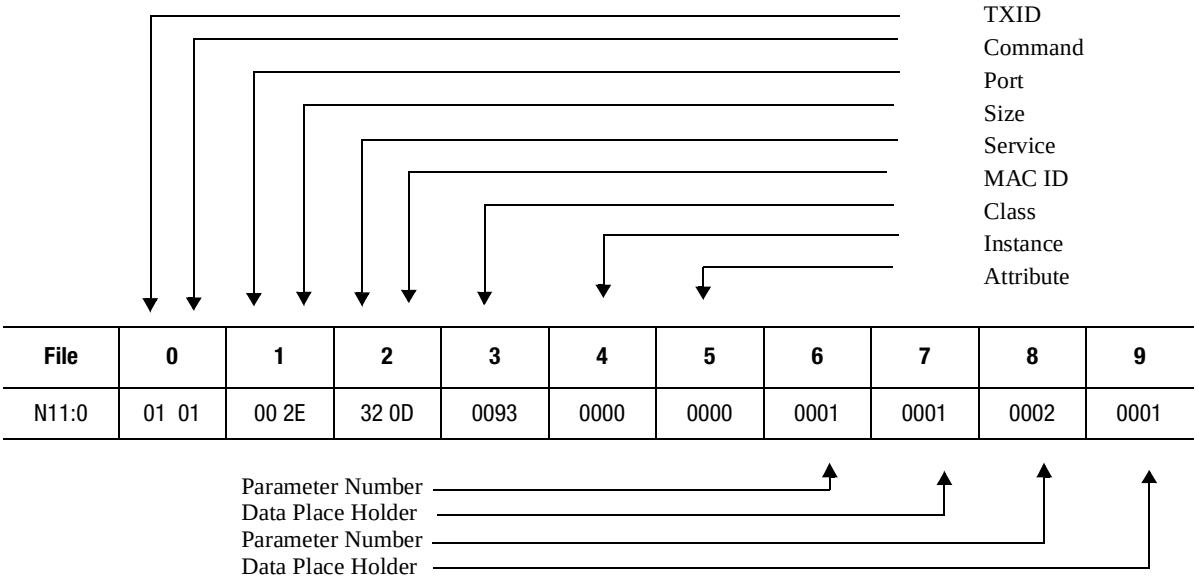

File	0	1	2	3	4	5	6	7	8	9
N11:0	01 01	00 2E	32 0D	0093	0000	0000	0001	0001	0002	0001

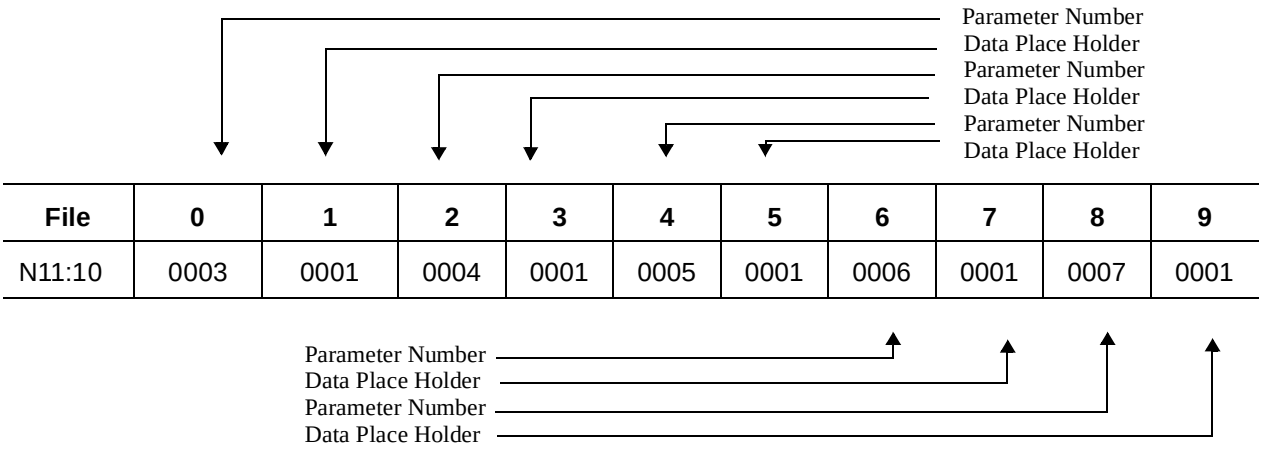

File	0	1	2	3	4	5	6	7	8	9
N11:10	0003	0001	0004	0001	0005	0001	0006	0001	0007	0001

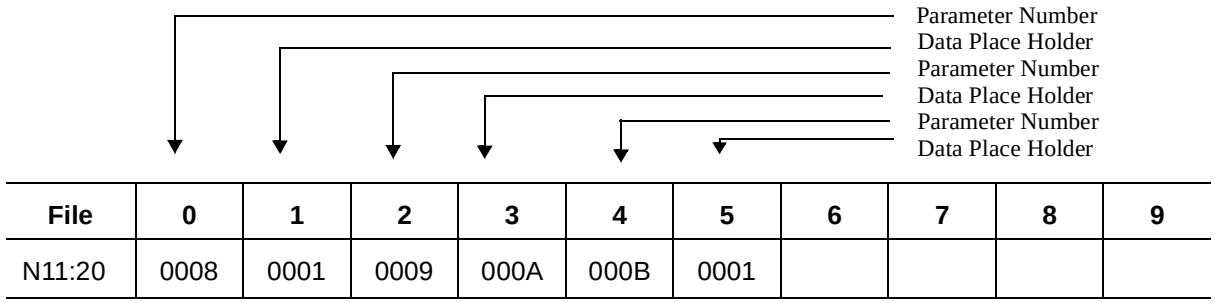

File	0	1	2	3	4	5	6	7	8	9
N11:20	0008	0001	0009	000A	000B	0001				

Note: There is no required value for the words identified as "Data Place Holder".

Example Ladder Logic Program:

Rung 0: The 1747-SDN scanner module will map output data from its scanner output table (MO) and discrete outputs to each node only when it's in the "run mode." This is accomplished by setting bit 0 of the 1747-SDN's command word (word 0).

Rung 1: When the START command is initiated at the RSView station the SLC processor sets the output bit mapped to the SMC Dialog Plus controller's logic control word start bit. The branch provides a logic "latched" circuit which exerts the START command until input from the SMC Dialog Plus controller's status word indicates that it has received the command and has responded appropriately. The SMC Dialog Plus controller will start if no STOP command is being issued by the SLC or any other control device.

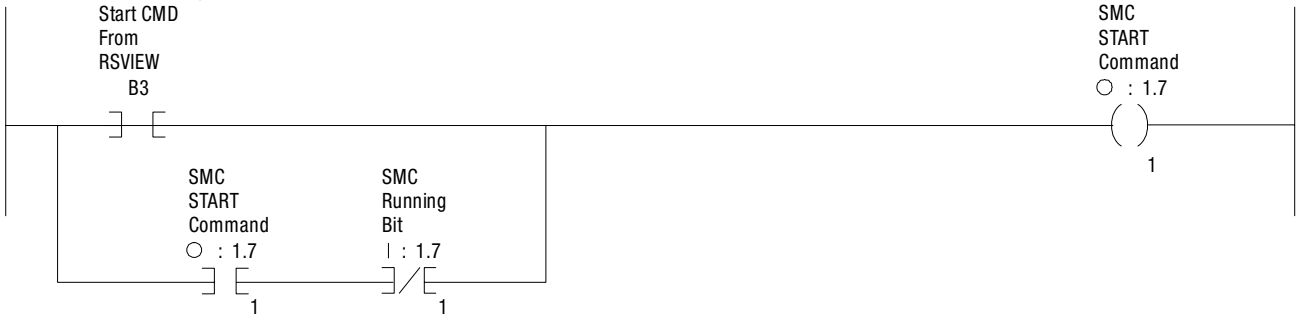

Rung 2: When the STOP command is initiated at the RSView station, the SLC processor sets the output bit mapped to the SMC Dialog Plus controller's logic control word stop bit. The branch provides a logic "latched" circuit which exerts the STOP command until input from the SMC Dialog Plus controller's status word indicates that it has received the command and has responded appropriately.

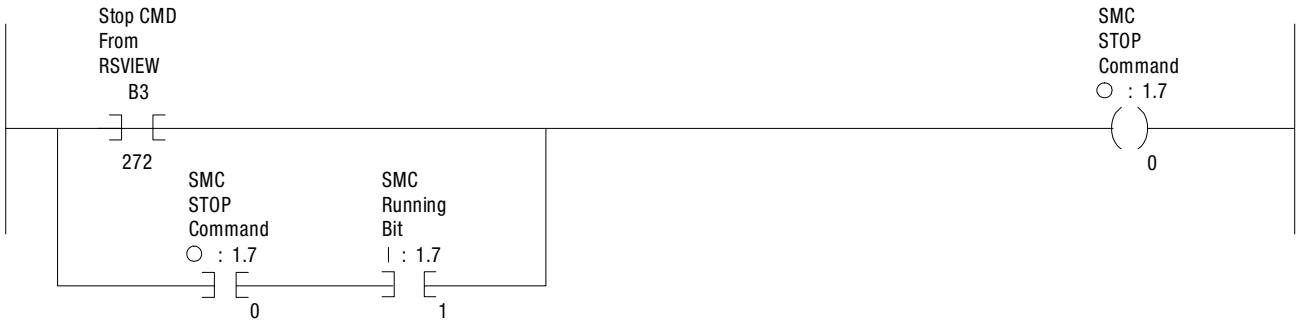

Rung 3: When the FAULT RESET command is initiated at the RSView station, the SLC processor sets the output bit mapped to the SMC Dialog Plus controller's logic control word clear faults bit. The branch provides a logic "latched" circuit which exerts the FAULT RESET command until input from the SMC Dialog Plus controller's status word indicates that it has received the comand and has responded appropriately. The SMC Dialog Plus controller's CLEAR FAULT bit functions as long as all other logic control bits have been reset to zero.

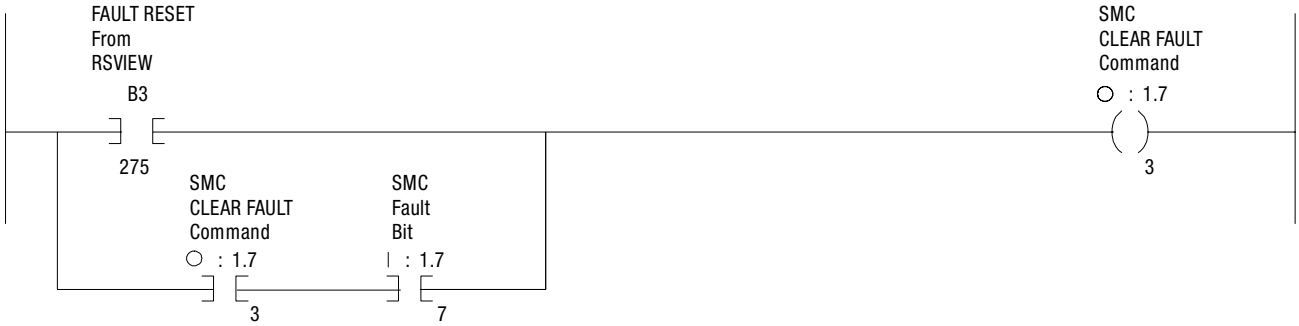

Rung 4: When bit B3:0/0 is set, the 32 words beginning at N11:0 from the SLC processor are copied to the 1747-SDN scanner's M0-file. The 1747-SDN scanner sends this message out over the DeviceNet trunkline. The unlatch branch instruction resets B3:0/0 to zero for the next processor scan.

Rung 5: When the 1747-SDN scanner has an Explicit Message response available, it sets bit 15 of its status word (I:1/15 in this example). The Explicit Message response is then copied from the 1747-SDN scanner's M1-file to the SLC processor's N11 file, beginning at word 50. The branch copies a command byte of 4 into the 1747-SDN scanner's M0-file which directs it to discard the response data to prepare it for the next Explicit Message operation.

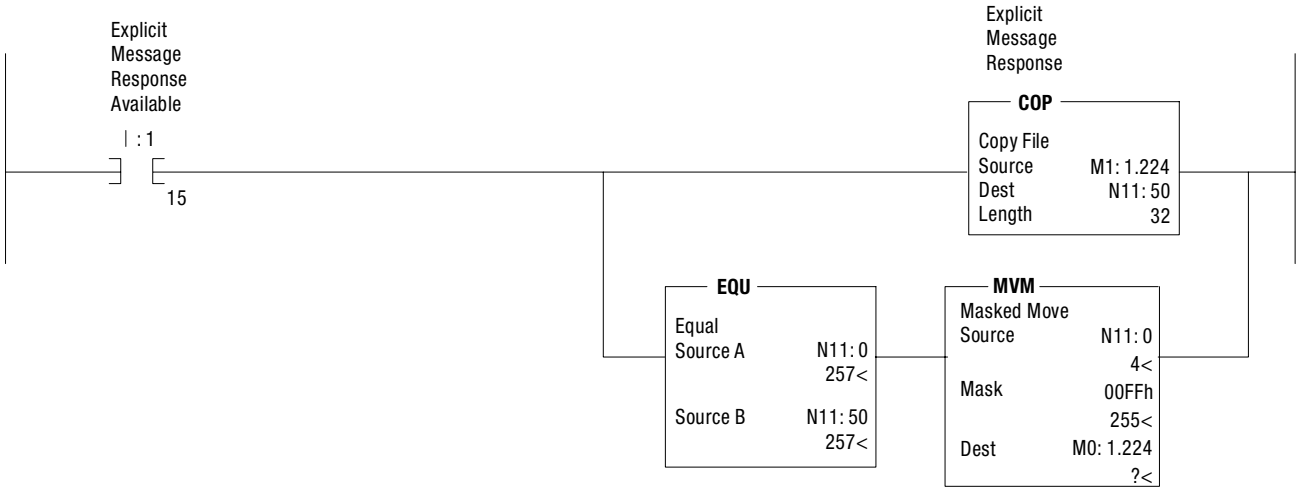

Diagnostics

Overview

This chapter describes the fault diagnostics of the SMC Dialog Plus controller. Further, this section describes the conditions that cause various faults to occur.

Protection Programming

Many of the protective features available with the SMC Dialog Plus controller can be enabled and adjusted through the programming parameters provided. For further details on programming, refer to the Advanced Setup section in Chapter 4, *Programming*.

Fault Display

The SMC Dialog Plus controller comes equipped with a built-in two-line, 16-character LCD. The LCD displays the fault message on the first line and the fault code on the second line.

Figure 9.1 Fault Display

```
OVERLOAD
F 7
```

Note: The fault display will remain active as long as control power is applied. If control power is cycled, the fault will be cleared, the controller will re-initialize, and the display will show a status of “Stopped.”

Important: Resetting a fault will not correct the cause of the fault condition. Corrective action must be taken before resetting the fault.

Clear Fault

You can clear a fault using any of several methods:

- Program the SMC Dialog Plus controller for a Clear Fault, which can be found in the Faults and Linear List groups.
- If a human interface module is connected to the controller, press the Stop button.

Note: The stop signal will not clear a fault if Control Logic is disabled (Logic Mask, parameter #85, equals 0).

Clear Fault (cont.)

- Cycle control power to the SMC Dialog Plus controller.

Notes: (1) An overload fault cannot be cleared in this way for firmware releases prior to the following:
- Standard Option 1.07L
- Soft Stop Option 1A07L
- Pump Control Option 1B05L

(2) A communication fault (F21) cannot be cleared in this way for firmware releases prior to 1.04C.

Important: An overload fault cannot be reset until the Motor Thermal Usage, parameter 11, value is below 75%. See page 1-7 for further details.

Fault Buffer

The SMC Dialog Plus controller stores in memory the five most recent faults. Display the fault buffer by selecting the Faults group and scrolling through the fault buffer parameters. The information is stored as fault codes. To determine what faults have occurred, use the fault code cross-reference below.

Fault Codes

Table 9.A provides a complete cross-reference of the available fault codes and corresponding fault descriptions.

Table 9.A Fault Code Cross-reference

Fault Code	Description	Fault Code	Description
F1/F30	Power Loss – A	F12/F27	Line Fault – B
F2/F31	Power Loss – B	F13/F28	Line Fault – C
F3/F32	Power Loss – C	F15/F29	Line Fault
F4	Undervoltage	F16	Phase Reversal
F5	Overvoltage	F19	Jam
F6	Stall	F21	Comm Fault
F7	Overload	F23	Open Gate – A
F8	Controller Temp.	F24	Open Gate – B
F9	Underload	F25	Open Gate – C
F10	Volt Unbalance	F64	Excess Starts/Hr.
F11/F26	Line Fault – A	F128-138	System Faults

Fault Auxiliary Contact

The auxiliary contact is located at terminals 29 and 30. This contact can be programmed as either Normal or Fault. Note that the state that this contact takes upon power-up (normally open or normally closed) can be programmed. These parameters can be found in either Basic Setup, Advanced Setup, or the Linear List groups when modifying parameters in the Program mode.

Fault Definitions

Power Loss

Power loss indicates that an input power phase is not present. The controller's LCD display will identify the missing phase.

Note: If all three phases are absent when a start command is issued, the LCD will display "Starting" without motor rotation.

Line Fault ①

Line fault with the affected phase displayed identifies three possible pre-start conditions.

- Phase loss
- Load loss
- Shorted SCR

Line fault with no phase indication is displayed when one of the following conditions occurs while the SMC Dialog Plus controller is in the run mode.

- Phase loss
- Load loss
- Shorted SCR

Phase Reversal

Phase reversal is indicated when the incoming power to the SMC Dialog Plus controller is in any sequence other than ABC. This pre-start protective feature can be disabled.

Overvoltage and Undervoltage Protection ①

Overvoltage and undervoltage protection are user-defined as a percentage of the programmed line voltage. The SMC Dialog Plus controller continuously monitors the three supply phases. The calculated average is then compared to the programmed trip level.

① Phase loss, overvoltage, and undervoltage protection are disabled during braking operation.

Fault Definitions (cont.)

Voltage Unbalance ①

Voltage unbalance is detected by monitoring the three phase supply voltages. The formula used to calculate the percentage voltage unbalance is as follows:

$V_u = 100\ (V_d / V_a)$

V_u: Percent voltage unbalance

V_d: Maximum voltage deviation from the average voltage

V_a: Average voltage

The controller will shut down when the calculated voltage unbalance reaches the user-programmed trip percentages.

Stall Protection

Stall protection is enabled at the end of the programmed ramp time after a motor has been started. If the controller senses that the motor is not up-to-speed at the end of ramp, it will shut down after the user-selected delay time has elapsed.

Jam Detection ②

Jam detection operates when the SMC Dialog Plus controller status is “at speed.” The controller will shut down when the motor current reaches the user-defined trip level, which is based on a percentage of the programmed motor full load current rating.

Overload Protection

Overload protection is enabled in the Calibration group by programming the:

- Overload class
- Overload reset
- Motor FLC
- Service factor

Refer to Chapter 5 for more information on calibration.

Underload ②

Underload protection is available for undercurrent monitoring. The controller will shut down when the motor current drops below the trip level. This trip level, a percentage of the motor’s full load current rating, can be programmed.

① Voltage unbalance protection is disabled during braking operation.

② Jam detection and underload protection are disabled during slow speed and braking operation.

Open Gate

Open gate indicates that an abnormal condition that causes faulty firing (i.e., open SCR gate) has been sensed during the start sequence. The SMC Dialog Plus controller will attempt to start the motor a total of three times before the controller shuts down.

Excess Starts/Hour

Excess starts/hour is displayed when the number of starts in a one hour period exceeds the value programmed.

Controller Temp

Controller temp is an indication that a power pole's maximum rated temperature has been reached. The controller's microprocessor monitors the temperature of the SCRs by using internal thermistors. When the controller detects an overtemperature condition, the microprocessor turns off the SCRs and displays the appropriate fault code.

An overtemperature condition could indicate the presence of inadequate ventilation, high ambient temperature, overloading, or excessive cycling.

If an overtemperature condition exists at start-up, the SCR gate signals will be inhibited and the controller will trip and indicate the fault. The fault can be immediately reset. However, the motor cannot be restarted until after the controller temperature falls below trip levels.

Comm Fault

The SMC Dialog Plus controller disables control through the serial communication port as the factory default. To enable control, the Logic Mask parameter (#85) found in the Linear List programming group must be set to "4." With Series B human interface modules, this can also be accomplished by enabling control logic through the Control Status programming group.

If a Bulletin 1201 human interface module or Bulletin 1203 communication module is disconnected from the SMC Dialog Plus controller when control is enabled, a Comm Fault will occur.

Troubleshooting

Introduction

For safety of maintenance personnel as well as others who might be exposed to electrical hazards associated with maintenance activities, follow the local safety related work practices (for example, the NFPA 70E, Part II in the United States). Maintenance personnel must be trained in the safety practices, procedures, and requirements that pertain to their respective job assignments.

ATTENTION: Hazardous voltage is present in the motor circuit even when the SMC Dialog Plus controller is off. To avoid shock hazard, disconnect main power before working on the controller, motor, or control devices such as Start-Stop push buttons. Procedures that require parts of the equipment to be energized during troubleshooting, testing, etc., must be performed by properly qualified personnel, using appropriate local safety work practices and precautionary measures.

ATTENTION: Disconnect the controller from the motor before measuring insulation resistance (IR) of the motor windings. Voltages used for insulation resistance testing can cause SCR failure. Do not make any measurements on the controller with an IR tester (megger).

Note: The time it takes for the motor to come up to speed may be more or less than the time programmed, depending on the frictional and inertial characteristics of the connected load.

Note: Depending on the application, the SMB Smart Motor Braking, Accu-Stop, and Slow Speed with Braking options may cause some vibration or noise during the stopping cycle. This may be minimized by lowering the braking current adjustment. If this is a concern in your application, please consult the factory before implementing these options.

The following flowchart is provided to aid in quick troubleshooting.

Figure 10.1 Troubleshooting Flowchart

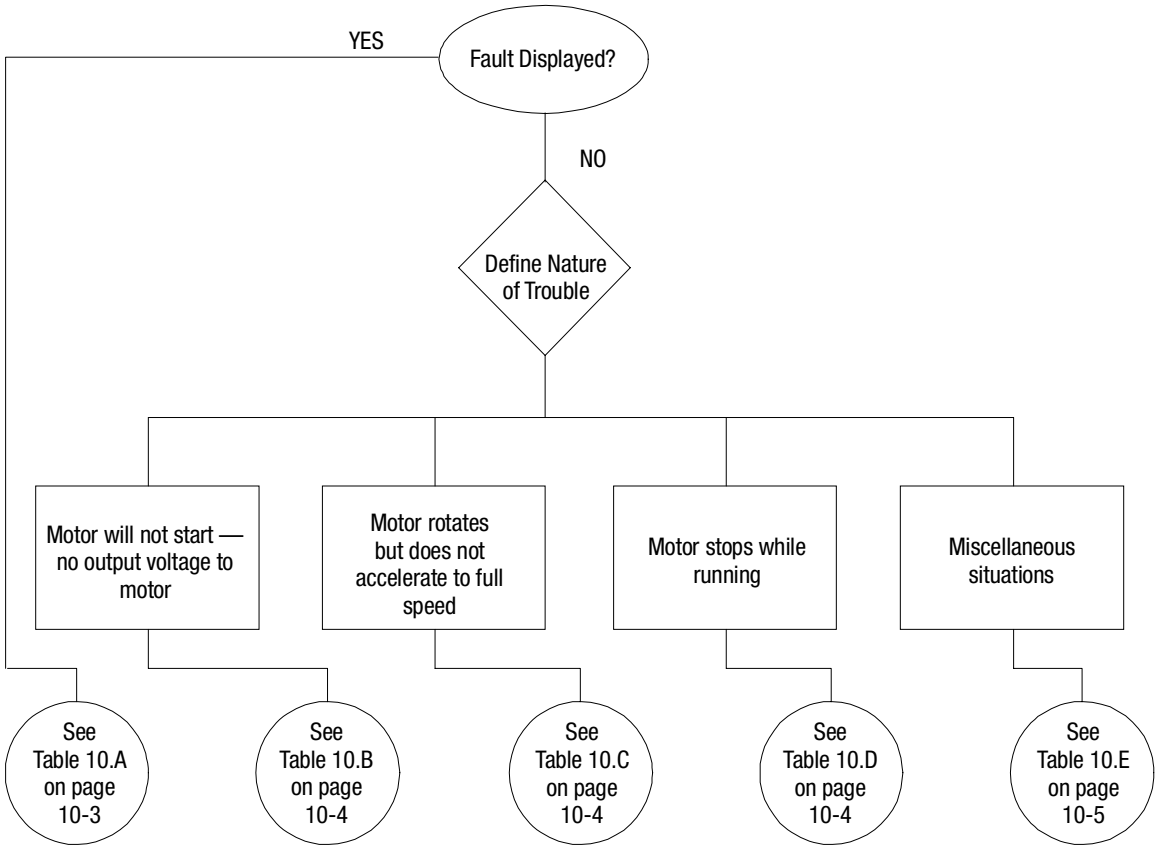

Table 10.A SMC Fault Display Explanation

Display	Fault Code	Possible Causes	Possible Solutions
Power Loss ① (with phase indication)	F1, F2, F3, F30, F31, & F32	• Missing supply phase (as indicated) • Converter module and/or cable failure	• Check for open line (i.e., blown line fuse) • Inspect converter module cable connections
Line Fault ① (with phase indication)	F11, F12, F13, F26, F27, & F28	• Missing supply phase • Motor not connected properly • Shorted SCR • Converter module and/or cable failure	• Check for open line (i.e., blown fuse) • Check for open load lead • Check for shorted SCR; replace if necessary • Inspect converter module cable connections • Consult the factory
Line Fault ② (no phase indication)	F15 and F29	• Missing supply phase • Motor not connected properly • Shorted SCR	• Check for open line (i.e., blown fuse) • Check for open load lead • Check for shorted SCR; replace if necessary
Voltage Unbalance	F10	• Supply unbalance is greater than the user-programmed value • The delay time is too short for the application	• Check power system and correct if necessary • Extend the delay time to match the application requirements
Phase Reversal	F16	• Incoming supply voltage is not in the expected ABC sequence	• Check power wiring
Undervolt	F4	• Supply voltage is less than user-programmed value • The delay time is too short for the application	• Check power system and correct if necessary • Correct the user-programmed value • Extend the delay time to match the application requirements
Overvolt	F5	• Supply voltage is greater than user-programmed value	• Check power system and correct if necessary • Correct the user-programmed value
Overload	F7	• Motor overloaded • Overload parameters are not matched to the motor	• Check motor overload condition • Check programmed values for overload class and motor FLC
Stall	F6	• Motor has not reached full speed by the end of the programmed ramp time	• Correct source of stall
Jam	F19	• Motor current has exceeded the user programmed jam level.	• Correct source of jam
Underload	F9	• Broken motor shaft • Broken belts, toolbits, etc. • Pump cavitation	• Repair or replace motor • Check machine • Check pump system
Open Gate (with phase indication)	F23-F25	• Open gate circuitry • Loose gate lead (180–1000A)	• Perform resistance check; replace power module if necessary • Check gate lead connections to the interface board
Excess Starts/Hr.	F64	• Number of starts in a one hour period has exceeded the value programmed	• Wait an appropriate amount of time to restart • Turn off the Starts/Hr. feature
Controller Temperature	F8	• Controller ventilation blocked • Controller duty cycle exceeded • Fan failure (if used) • Ambient temperature limit exceeded • Failed thermistor • Failed control module	• Check for proper ventilation • Check application duty cycle • Replace fan • Wait for controller to cool or provide external cooling • Replace power module • Replace control module
Comm Fault	F21	• Communication disconnection at the serial port	• Check for a communication cable disconnection to the SMC Dialog Plus controller
System Faults	F128 & above	• Internal control module hardware failure	• Replace control module
MPU Comm Fault	—	• Internal control module hardware failure	• Replace control module
Curr Fdbk Loss	F20	• Converter module cable disconnection	• Inspect converter module cable and connections

① Prestart fault indication.

② To further define this fault, the user can clear the fault and re-initiate a start signal. If the fault condition is still present, the controller will display either a Power Loss or a Line Fault with the phase indicated.

Table 10.B Motor Will Not Start — No Output Voltage to the Motor

Display	Possible Cause	Possible Solutions
Fault displayed	• See fault description	• See Table 10.A addressing fault conditions
Display is blank	• Control voltage is absent • Failed control module	• Check control wiring and correct if necessary • Replace control module
Stopped 0.0 Amps	• Pilot devices • SMC Enable input is open at terminal 13 • Terminal 15 is open on Soft Stop, Pump Control, and SMB • Start-Stop control has not been enabled for the human interface module • Control voltage • Failed control module	• Check wiring • Check wiring • Check wiring • Follow the instructions on pages 2-13 and 2-14 to enable control capability • Check control voltage • Replace control module
Starting	• Two or three power phases are missing	• Check power system

Table 10.C Motor Rotates (but does not accelerate to full speed)

Display	Possible Cause	Possible Solutions
Fault displayed	• See fault description	• See Table 10.A addressing fault conditions
Starting	• Mechanical problems • Inadequate Current Limit setting • Failed control module	• Check for binding or external loading and correct • Check motor • Adjust the Current Limit Level to a higher setting • Replace control module

Table 10.D Motor Stops While Running

Display	Possible Cause	Possible Solutions
Fault displayed	• See fault description	• See Table 10.A addressing fault conditions
Display is blank	• Control voltage is absent • Failed control module	• Check control wiring and correct if necessary • Replace control module
Stopped 0.0 Amps	• Pilot devices • Failed control module	• Check control wiring and correct if necessary • Replace control module
Starting	• Two or three power phases are missing • Failed control module	• Check power system • Replace control module

Table 10.E Miscellaneous Situations

Situation	Possible Cause	Possible Solutions
Motor current and voltage fluctuates with steady load	• Motor • Energy Saver • Erratic Load	• Verify type of motor as a standard squirrel cage induction motor • Set Energy Saver Off, then restart. – If problem stops, replace control module – If problem persists, shut off **all** power to controller and check connections • Check load conditions
Erratic operation	• Loose connections	• Shut off **all** power to controller and check for loose connections
Accelerates too fast	• Starting time • Initial torque • Current limit setting • Kickstart	• Increase starting time • Lower initial torque setting • Decrease current limit setting • Lower kickstart time or turn off
Accelerates too slow	• Starting time • Initial torque • Current limit setting • Kickstart	• Decrease starting time • Increase initial torque setting • Increase current limit setting • Increase kickstart time or turn off
Fan does not operate (97–1000A)	• Wiring • Failed fan(s)	• Check wiring and correct if necessary • Replace fan(s)
Motor stops too quickly with Soft Stop option	• Time setting	• Verify the programmed stopping time and correct if or increase
Motor stops too slowly with Soft Stop option	• Stopping time setting • Misapplication	• Verify the programmed stopping time and correct if necessary • The Soft Stop option is intended to **extend** the stopping time for loads that stop suddenly when power is removed from the motor.
Fluid surges with pumps still occur with the Soft Stop option	• Misapplication	• Soft Stop ramps voltage down over a set period of time. In the case of pumps, the voltage may drop too rapidly to prevent surges. A closed loop system such as Pump Control would be more appropriately suited. • Refer to Publication 150-911
Motor overheats	• Duty cycle	• Preset Slow Speed and Accu-Stop options: Extended operation at slow speeds reduces motor cooling efficiency. Consult motor manufacturer for motor limitations. • Smart Motor Braking option: Check duty cycle. Consult motor manufacturer for motor limitations.
Motor short circuit	• Winding fault	• Identify fault and correct. • Check for shorted SCR; replace if necessary. • Ensure power terminals are secure.

Control Module Removal

ATTENTION: To avoid shock hazard, disconnect main power before working on the controller, motor, or control devices (such as Stop/Start push buttons).

ATTENTION: Make sure that wires are properly marked and that programmed parameter values are recorded.

ATTENTION: When removing control module, make sure power module or interface board pins do not bend.

ATTENTION: The 500 amp device is equipped with two shields that must be in place when power is applied to the controller.

The control module is not intended for field repair. The entire module must be replaced if a failure occurs. Follow the applicable procedure for control module removal.

24–135 Amp

Refer to Figure 10.2 for control module removal reference.

1. Remove all control wires and serial port cables.
2. Loosen six mounting screws.
3. Unplug control module from the power structure by pulling forward.

Figure 10.2 Removal of Control Module (24–135A)

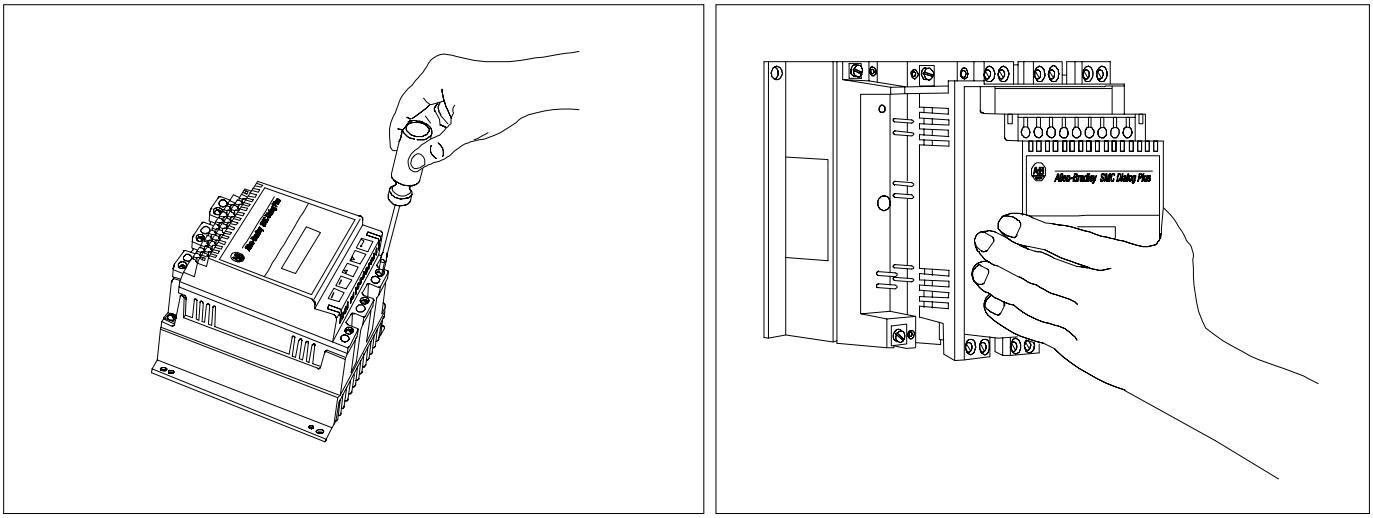

180–360 Amp

Refer to Figure 10.3 for control module reference.

1. Remove controller access door and serial port cable.
2. Remove controller cover.
3. Remove all control wires and loosen six control module mounting screws.
4. Unplug control module from the interface board by pulling forward.

Figure 10.3 Removal of Control Module (180–360A)

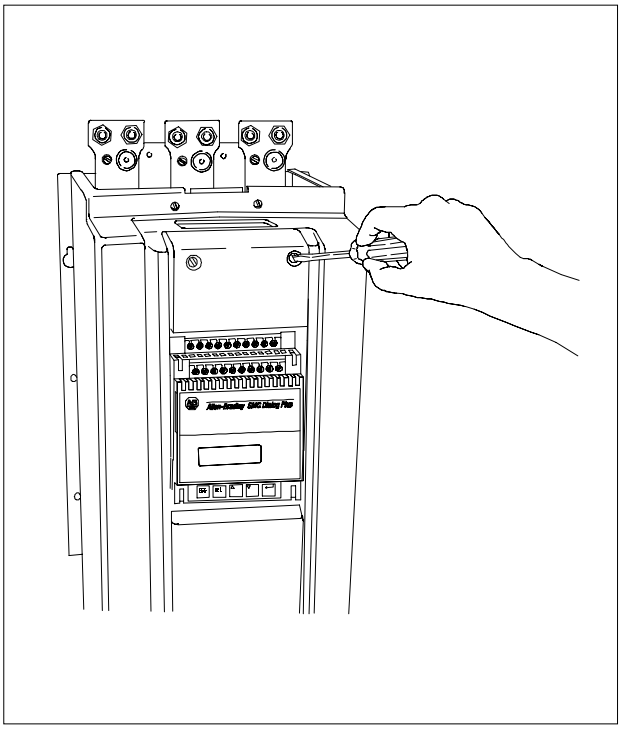

(1)

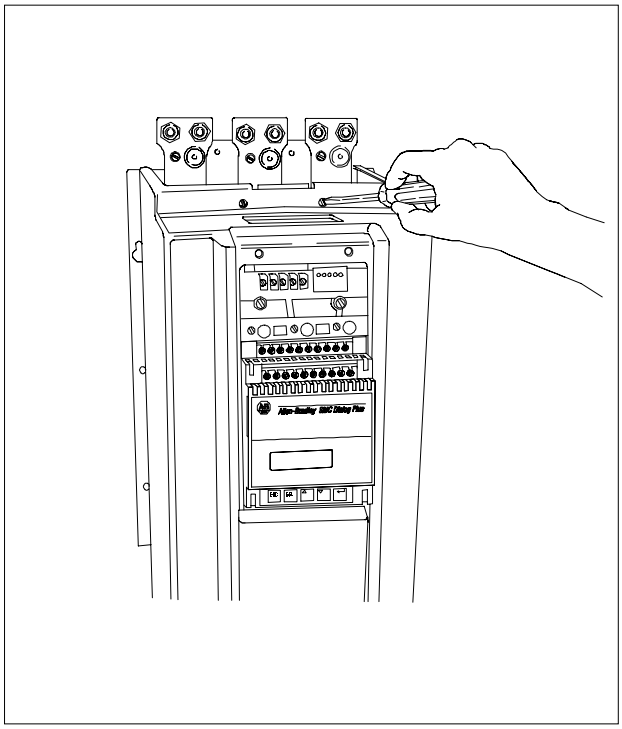

(2)

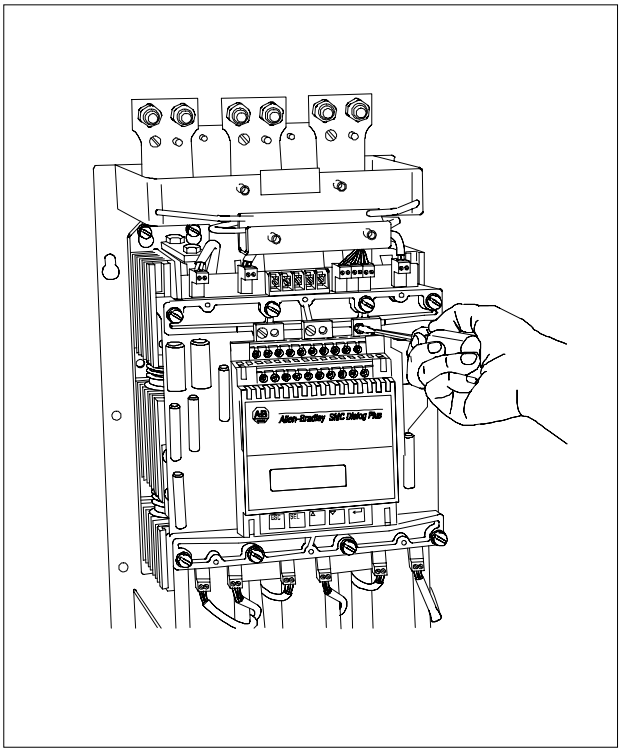

(3)

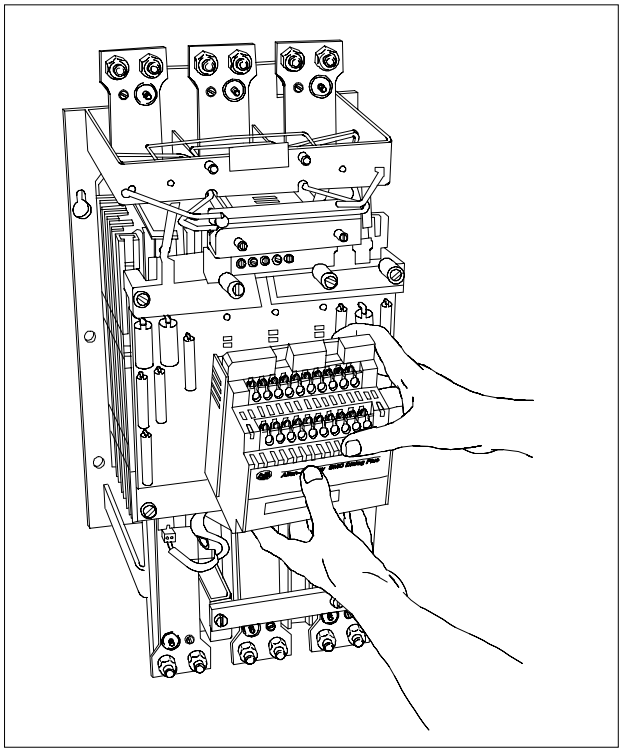

(4)

500–1000 Amp

Refer to Figure 10.4 for control module removal reference.

1. Disconnect all control wires to control modules.
2. Loosen six control module screws.
3. Unplug control module from interface board by pulling forward.

Figure 10.4 Removal of Control Module (500–1000A)

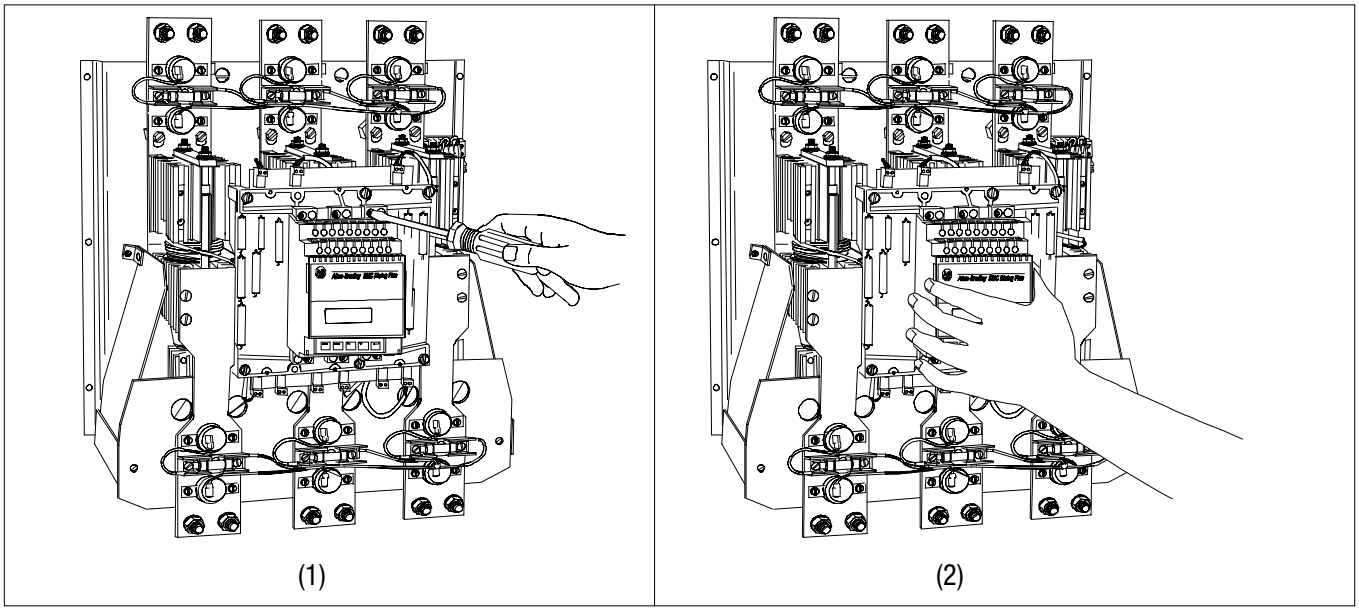

Control Module Replacement

The gold interconnection pins on the power modules and interface boards are protected with a special contact lubricant. **Do not clean or wipe these pins.**

ATTENTION: When installing the control module, make sure the power module or interface board pins are not bent.

To install a control module, reverse the order of the removal procedure.

Protective Cover Removal

650–1000 Amp

Figure 10.5 Removal of Protective Cover (500–1000A)

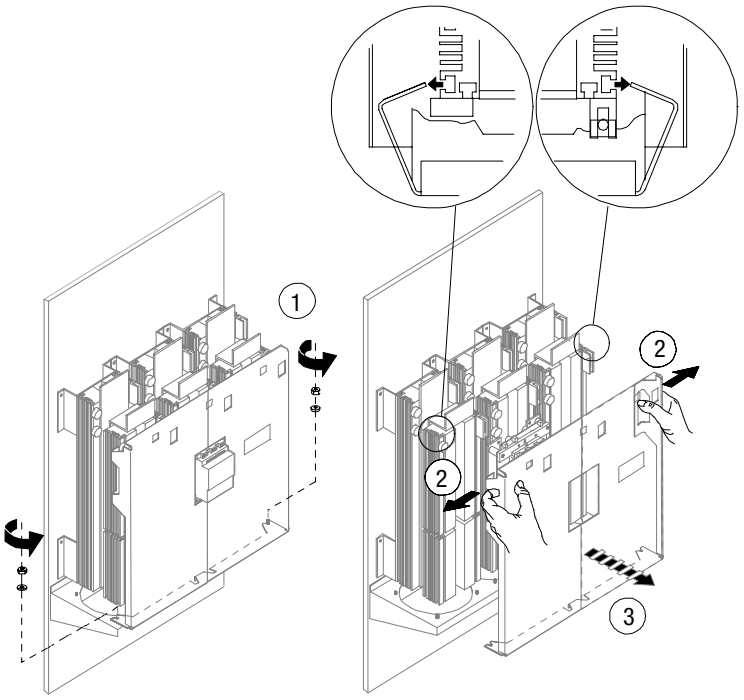

MOV Fuse Replacement

500–1000 Amp

ATTENTION: To avoid shock hazard, disconnect mainpower before working on the controller, motor, or control devices such as Start/Stop push buttons.

ATTENTION: Replacement of the fuse with anything other than the recommended part number may cause physical damage to the controller.

1. Remove the fuse from the fuse holder with a fuse puller (Figure 10.6).
2. Push the replacement fuse into the fuse holder.

Figure 10.6 MOV Fuse Replacement

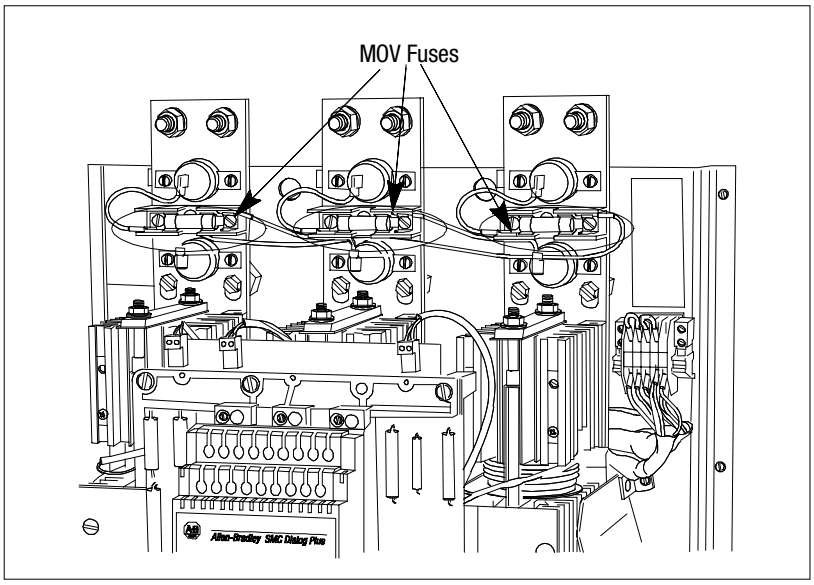

Power Module and Interface Board Resistance Check

If a power module needs to be checked, use the applicable procedure that follows.

ATTENTION: To avoid shock hazard, disconnect main power before working on the controller, motor, or control devices such as Start/Stop push buttons.

ATTENTION: Make sure that wires are properly marked and programmed parameter values are recorded.

Power Module and Interface Board Resistance Check (cont.)

24–135 Amp

Remove the control module per the instructions beginning on page 10-6. Refer to Figure 10.7 for power module pin identification.

Shorted SCR Test

1. Using an ohmmeter, measure the resistance between the line and load terminals of each phase on the controller.

The resistance should be greater than 10,000 ohms.

Feedback Resistance

1. Measure resistance between pins 1 and 2.

Resistance should be 19,000 ohms, +/–5%.

2. Measure resistance between pins 7 and 8.

Resistance should be 19,000 ohms +/–5%.

Gate Lead Resistance

1. Measure resistance between pins 2 and 3.

Resistance should less than 100 ohms.

2. Measure resistance between pins 6 and 7.

Resistance should be less than 100 ohms.

Thermistor Resistance

1. Measure resistance between pins 4 and 5.

Resistance should be less than 150 ohms.

If the power module fails any of the above tests, replace it.

Figure 10.7 Pin Locations for Power Module Resistance Check

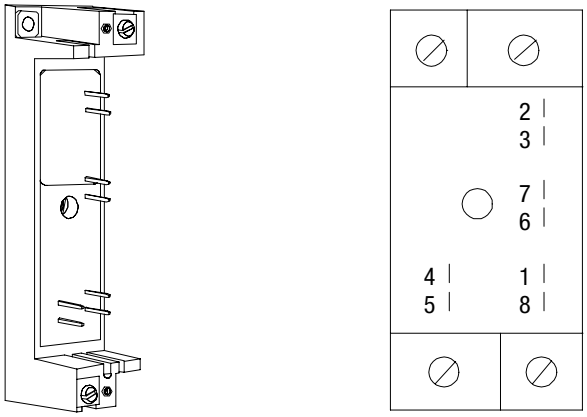

180-1000 Amp

Remove the control module per the instructions beginning on page 10-6. Refer to Figure 10.8 for interface board pin identification.

Shorted SCR Test

Using an ohmmeter, measure the resistance between the line and load terminals of each phase on the controller. Resistance should be greater than 10,000 ohms.

Feedback Resistance

1. Measure resistance between:

- pins J17 and J18 for phase L1/T1
- pins J12 and J13 for phase L2/T2
- pins J4 and J5 for phase L3/T3

Each resistance should be approximately 20KΩ.

2. Measure resistance between:

- pins J14 and J21 for phase L1/T1
- pins J9 and J20 for phase L2/T2
- pins J1 and J19 for phase L3/T3

Each resistance should be approximately 20KΩ.

If any of the measurements read “open,” replace the interface board.

Figure 10.8 Pin Locations for Power Pole Resistance Check (180–1000A)

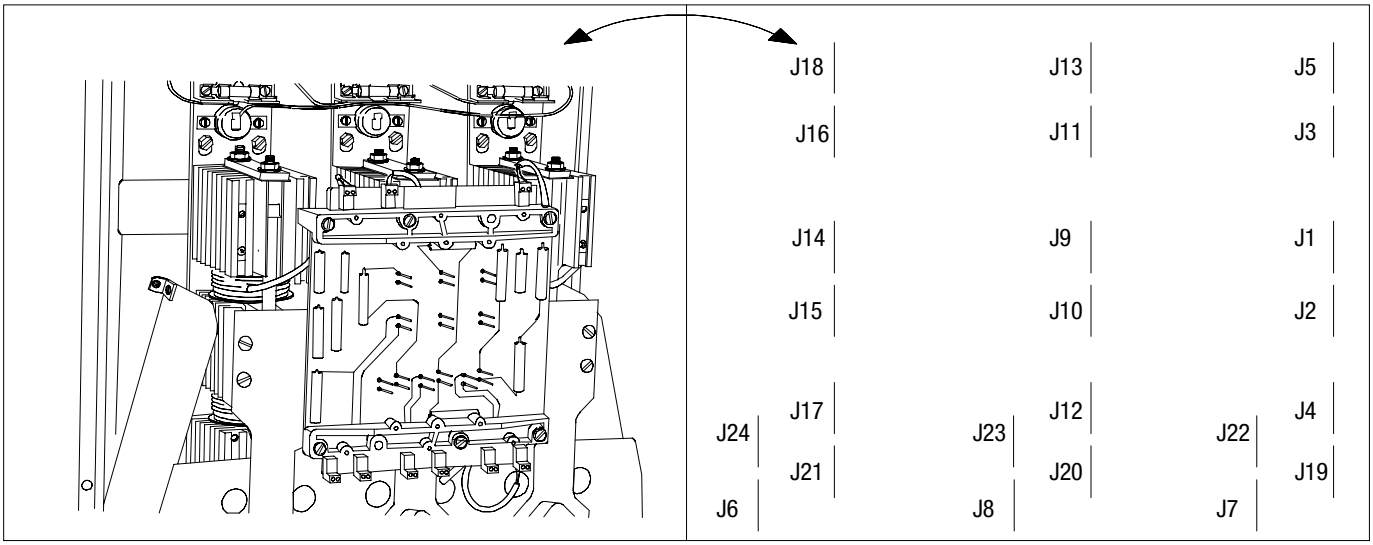

Gate Lead Resistance

1. Measure resistance between:

- pins J16 and J18 for phase L1/T1
- pins J11 and J13 for phase L2/T2
- pins J3 and J5 for phase L3/T3

The resistance should be approximately 100Ω.

Power Module and Interface Board Resistance Check (cont.)

2. Measure resistance between:

- pins J14 and J15 for phase L1/T1
- pins J9 and J10 for phase L2/T2
- pins J1 and J2 for phase L3/T3

The resistance should be approximately 100Ω.

If any of the resistances measure greater than 100Ω, recheck the resistance values directly at the gate lead connectors as shown in Figure 10.9.

Based on the results, one of the following actions will be required:

1. All resistance values are valid - Replace interface board.
2. Resistance(s) measure greater than 100Ω – Replace corresponding power pole(s).

Thermistor Resistance

1. Measure resistance between:

- pins J6 and J24 for phase L1/T1
- pins J8 and J23 for phase L2/T2
- pins J7 and J22 for phase L3/T3

The resistance should be less than 500Ω.

If any of the resistances measure greater than 500Ω, recheck the resistance values directly at the thermistor lead connectors as shown in Figure 10.9.

Based on the results, one of the following actions will be required:

- If all resistance values are valid, replace interface board.
- If resistance(s) measure greater than 500Ω, replace the corresponding power pole(s).

Figure 10.9 Gate and Thermistor Lead Identification (180–1000A)

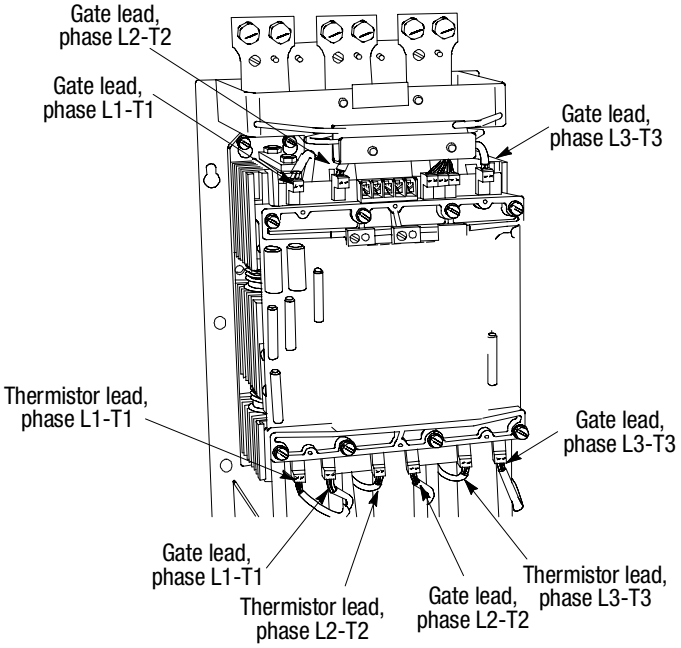

Specifications

Electrical Ratings		UL/CSA/NEMA	IEC
Power Circuit			
Method of Connection		Motor in delta or star, SCRs between windings and supply	
Number of Poles		Equipment designed for three phase loads only	
Rated Operation Voltage (Ue)		200–480 VAC (–15%, +10%) 200–600 VAC (–15%, +10%)	200–415VY (–15%, +10%) 200–500VY (–15%, +10%)
Rated Insulation Voltage (Ui)		N/A	500V~
Rated Impulse Voltage (Uimp)		N/A	4000V
Dielectric Withstand		2200 VAC	2500V~
Repetitive Peak Inverse Voltage Rating		200–480 VAC: 1400V 200–600 VAC: 1600V	200–415~: 1400V 200–500V~: 1600V
Operating Frequency		50/60 Hz	50/60 Hz
Utilization Category		MG 1	AC-53a
Protection Against Electrical Shock		N/A	IP 00 (open device)
DV/DT Protection		RC Snubber Network	
Transient Protection		Metal Oxide Varistors: 220 Joules @ 24–360A 220 Joules @ 480V, 500–1000A 300 Joules @ 480V, 500–1000A	
Short Circuit Protection			
SCPD Performance		Type 1	
SCPD List		Maximum Fuse or Circuit Breaker	
Device Operational Current Rating (Ie)	Fault Current Withstand Rating (A rms sym)		
24A	5000	80A	
35A	5000	125A	
54A	5000	200A	
97A	10,000	350A	
135A	10,000	500A	
180A	10,000	600A	
240A	18,000	700A	
360A	18,000	1000A	
500A	30,000	1200A	
650A	30,000	1600A	
720A	42,000	2000A	
850A	42,000	2500A	
1000A	85,000	3000A	

Electrical Ratings	UL/CSA/NEMA	IEC
Control Circuit		
Rated Operation Voltage ①	100–240 VAC (–15%, +10%) 24 VAC (–15%, +10%) 24 VDC (–20%, +10%)	100–240 V~ (–15%, +10%) 24 V~ (–15%, +10%) 24 VDC (–20%, +10%)
Rated Insulation Voltage	N/A	240 V~
Rated Impulse Voltage	N/A	3000 V
Dielectric Withstand	1600 VAC	2000 Y~
Operating Frequency	50/60 Hz	50/60 Hz
Protection Against Electrical Shock	N/A	IP20
Power Requirements		
Control Module	40VA	
Heatsink Fan(s)		
24A	—	
35A	—	
54A	—	
97A	45VA	
135A	45VA	
180A	45VA	
240A	45VA	
360A	45VA	
500A	145VA	
650A	320VA	
720A	320VA	
850A	320VA	
1000A	320VA	
Maximum Heat Dissipation (watts)		
Controller Rating:		
24A	110	
35A	150	
54A	200	
97A	285	
135A	490	
180A	660	

① Refer to product nameplate.

Electrical Ratings	UL/CSA/NEMA	IEC
Control Circuit		
Rated Operation Voltage ①	100–240 VAC (–15%, +10%) 24 VAC (–15%, +10%) 24 VDC (–20%, +10%)	100–240 V~ (–15%, +10%) 24 V~ (–15%, +10%) 24 VDC (–20%, +10%)
Rated Insulation Voltage	N/A	240 V~
Rated Impulse Voltage	N/A	3000 V
Dielectric Withstand	1600 VAC	2000 Y~
Operating Frequency	50/60 Hz	50/60 Hz
Protection Against Electrical Shock	N/A	IP20
Power Requirements		
Control Module	40VA	
Heatsink Fan(s)		
24A	—	
35A	—	
54A	—	
97A	45VA	
135A	45VA	
180A	45VA	
240A	45VA	
360A	45VA	
500A	145VA	
650A	320VA	
720A	320VA	
850A	320VA	
1000A	320VA	
Maximum Heat Dissipation (watts)		
Controller Rating:		
24A	110	
35A	150	
54A	200	
97A	285	
135A	490	
180A	660	

Other Ratings	UL/CSA/NEMA	IEC
EMC Emission Levels		
Conducted Radio Frequency Emissions	Class A	
Radiated Emissions	Class A	
EMC Immunity Levels		
Electrostatic Discharge	8kV Air Discharge	
Radio Frequency Electromagnetic Field	Per IEC 947-4-2	
Fast Transient	Per IEC 947-4-2	
Surge Transient	Per IEC 947-4-2	
Overload Characteristics:		
Type	Solid-state thermal overload with phase loss	
Current Range	1.0–999.9 Amps	
Trip Classes	10, 15, 20, and 30	
Trip Current Rating	120% of Motor FLC	
Number of Poles	3	
Metering Accuracy		
Voltage	± 2%	
Current	± 5% ① ②	
kW	± 10%	
kWH	± 10%	
Displacement Power Factor	± 3% ③	
Converter Module Output		
Cat. No.: 825-MCM20 825-MCM180 825-MCM630	 78.8 mV/A 9.85 mV/A 1.231 mV/A	

① Assumes the Bulletin 825 converter module is utilized.

② The SMC Dialog Plus controller calculates the current values to two decimal place resolution while displaying only to tenths of Amps. The display accuracy provided is, therefore, reduced by the truncation. The affect of truncation on accuracy will be dependent on the magnitude of the value.

③ Assumes a balanced supply.

Environmental Ratings	UL/CSA/NEMA	IEC
Operating Temperature Range	0°C–50°C (open) 0°C–40°C (enclosed)	
Storage and Transportation Temperature Range	–20°C–+75°C	
Altitude	2000 meters	
Humidity	5%–95% (nonñcondensing)	
Pollution Degree	2	

Parameter Information

Table B.1 Parameter List

Group	Parameter Description	Parameter Number	Display Units	Scale Factor	Minimum	Maximum	Default Setting	User Setting
Metering ①	Voltage Phase A–B	1	Volts	1	—	—	—	—
	Voltage Phase B–C	2	Volts	1	—	—	—	—
	Voltage Phase C–A	3	Volts	1	—	—	—	—
	Current Phase A	4	Amps	10	—	—	—	—
	Current Phase B	5	Amps	10	—	—	—	—
	Current Phase C	6	Amps	10	—	—	—	—
	Wattmeter	7	kW	10	—	—	—	—
	Kilowatt Hours	8	kWH	1	—	—	—	—
	Elapsed Time	9	Hours	1	—	—	—	—
	Power Factor	10	—	100	—	—	—	—
	Motor Thermal Usage	11	%	1	—	—	—	—
Faults	Clear Fault	18	—	—	No, Yes		No	—
	Fault Buffer #1 ①	19	—	1	—	—	—	—
	Fault Buffer #2 ①	20	—	1	—	—	—	—
	Fault Buffer #3 ①	21	—	1	—	—	—	—
	Fault Buffer #4 ①	22	—	1	—	—	—	—
	Fault Buffer #5 ①	23	—	1	—	—	—	—
Basic Setup	SMC Option ①	14	—	—	Standard, Soft Stop, Pump Control, Preset Slow Speed, Smart Motor Braking, Accu-Stop, or Slow Speed with Braking			—
	Starting Mode	28	—	—	Soft Stop, Current Limit		Soft Start	
	Ramp Time #1	30	Seconds	1	0	30	10	
	Initial Torque #1	31	% LRT	1	0	90	70	
	Current Limit Level	34	% FLC	1	50	600	50	
	Kickstart Time	35	Seconds	10	0.0	2.0	0.0 (Off)	

① Read-only capability.

Table B.1 (cont.) Parameter List

Group	Parameter Description	Parameter Number	Display Units	Scale Factor	Minimum	Maximum	Default Setting	User Setting
Basic Setup (cont.)	Stall Delay	37	Seconds	10	0.0	10.0	0 (Off)	
	Energy Saver	38	—	—	Off, On		Off	
	Aux. Contacts 1 and 2	39	—	—	Normal, Up-to-speed		Normal	
	Aux. Contact 3	40	—	—	Normal, Fault		Normal	
	Contact 3 Config	41	—	—	N.O., N.C.		N.O.	
	Parameter Mgmt.	17	—	—	Ready, Default Init. Recll Frm EE,Store In EE		Ready	
	Control Options							
	Soft Stop							
	Soft Stop Time	42	Seconds	1	0	60	0	
	Pump Control							
	Starting Mode	28	—	—	Soft Start, Current Limit, and Pump Start		Soft Start	
	Pump Stop Time	42	Seconds	1	0	120		
	Preset Slow Speed							
	Slow Speed Select	44	—	—	Low, High		High	
	Slow Speed Direction	45	—	—	Reverse, Forward		Forward	
	Slow Accel Current	46	% FLC	1	0	450	0	
	Slow Running Current	47	% FLC	1	0	450	0	
	SMB Smart Motor Braking							
	Braking Current	48	% FLC	1	0	400	0	
	Accu-Stop							
	Slow Speed Select	44	—	—	Low, High		High	
	Slow Accel Current	46	% FLC	1	0	450	0	
	Slow Running Current	47	% FLC	1	0	450	0	
	Braking Current	48	% FLC	1	0	400	0	
	Stopping Current	51	% FLC	1	0	400	0	

Table B.1 (cont.) Parameter List

Group	Parameter Description	Parameter Number	Display Units	Scale Factor	Minimum	Maximum	Default Setting	User Setting
Basic Setup (cont.)	**Slow Speed with Braking**							
	Slow Speed Select	44	—	—	Low, High		High	
	Slow Accel Current	46	% FLC	1	0	450	0	
	Slow Running Current	47	% FLC	1	0	450	0	
	Braking Current	48	% FLC	1	0	400	0	
Advanced Setup	Dual Ramp	29	—	—	No, Yes		No	
	Ramp Time #2	32	Seconds	1	0	30	10	
	Initial Torque #2	33	% LRT	1	0	90	70	
	Undervolt Level	52	% Line Voltage	1	0	99	0 (Off)	
	Undervolt Delay	53	Seconds	1	0	99	0	
	Overvolt Level	54	% Line Voltage	1	0	199	0 (Off)	
	Overvolt Delay	55	Seconds	1	0	99	0	
	Jam Level	56	% FLC	1	0	999	0 (Off)	
	Jam Delay	57	Seconds	10	0.0	10.0	0	
	Unbalance Level	58	%	1	0	25	0 (Off)	
	Unbalance Delay	86	Seconds	1	0	99	0	
	Rebalance	59	—	—	Off, On		Off	
	Underload Level	60	% FLC	1	0	99	0 (Off)	
	Underload Delay	61	Seconds	1	0	99	0	
	Phase Reversal	62	—	—	Off, On		Off	
	Starts per Hour	63	—	—1	0	99	0 (Off)	
	Restart Attempts	64	—	1	0	5	2	
	Restart Delay	65	Seconds	1	0	60	0	
	ETM Reset	15	—	—	Off, On		Off	
	Parameter Management	17	—	—	Ready, Default Init. Recll Frm EE,Store In EE		Ready	

Table B.1 (cont.) Parameter List

Group	Parameter Description	Parameter Number	Display Units	Scale Factor	Minimum	Maximum	Default Setting	User Setting
Calibrate	Overload Class	36	—	—	Off, 10, 15, 20, and 30		Off	
	Overload Reset	88	—	—	Manual-Auto		Manual	
	Motor HP Rating	79	HP	10	0.0	6,553.5	0.0	
	Motor kW Rating	80	kW	10	0.0	6,553.5	0.0	
	Line Voltage	69	Volts	1	0	9999	480	
	Motor FLC	70	Amps	10	1.0	999.9	1.0	
	Service Factor	84	—	100	0.01	1.99	1.15	
	Motor Code Letter	72	—	—	A, B, C, D, E, F, G, H, J, K, L, M, N, P, R, S, T, U, and V		G	
	LRC Ratio	81	—	10	0.0	19.9	0.0	
	Converter Rating	74	—	—	None, 20, 180, 630		None	
	CT Ratio	75	—	—	5, 50, 75, 100, 150, 200, 250, 300, 400, 500, 600, 750, 800, 1000, 1200 :5		5:5	
	Calibration	76	—	—	Off, Activate		Off	
	Enter Calib. Amps	77	Amps	②	0.01	999.9	0.0	
	Current Phase A ①	4	Amps	10	—	—	—	
	Parameter Mgmt.	17	—	—	Ready, Default Init. Recll Frm EE,Store In EE		Ready	

① Read-only capability.

② The scale factor is 100 when Motor FLC, parameter 70, has a programmed value of up to 10.0 Amps; above 10.0 Amps, the scale factor is 10.

Table B.2 Parameter Text/Display Unit Cross Reference

Parameter Number	Description	Setting Text	Display Unit
14	SMC Option	Standard	0
		Soft Stop	1
		Pump Control	2
		Preset Slow Speed	3
		Smart Motor Braking	4
		Accu-Stop	5
		Slow Speed with Braking	6
15	ETM Reset	Off	0
		On	1
17	Parameter Mgmt.	Ready	0
		Default Init	1
		Recall From EE	2
		Store In EE	3
18	Clear Fault	No	0
		Yes	1
28	Starting Mode	Current Limit	0
		Soft Start	1
		Pump Start ①	2
29	Dual Ramp ②	No	0
		Yes	1
36	Overload Class	Off	0
		10	1
		15	2
		20	3
		30	4
38	Energy Saver	Off	0
		On	1
39	Aux Contacts 1&2	Normal	0
		Up-to-speed	1
40	Aux Contact 3	Normal	0
		Fault	1
41	Contact 3 Config	N.O	0
		N.C.	1
44	Slow Speed Select ③	Low	0
		High	1
45	Slow Speed Direction ④	Reverse	0
		Forward	1
59	Rebalance	Off	0
		On	1
62	Phase Reversal	Off	0
		On	1

① Pump Start is only available with the Pump Control option.

② Dual Ramp is only available with the standard controller.

③ Slow Speed Select is only available with the Preset Slow Speed and Accu-Stop options.

④ Slow Speed Direction is only available with the Preset Slow Speed option.

Table B.2 (cont.) Parameter Text/Display Unit Cross Reference

Parameter Number	Description	Setting Text	Display Unit
72	Motor Code Letter	A	0
		B	1
		C	2
		D	3
		E	4
		F	5
		G	6
		H	7
		J	8
		K	9
		L	10
		M	11
		N	12
		P	13
		R	14
		S	15
		T	16
		U	17
		V	18
74	Converter Rating	None	0
		20	1
		180	2
		630	3
75	CT Ratio	5:5	0
		50:5	1
		75:5	2
		100:5	3
		150:5	4
		200:5	5
		250:5	6
		300:5	7
		400:5	8
		500:5	9
		600:5	10
		700:5	11
		800:5	12
		1000:5	13
		1200:5	14
88	Overload Reset	Manual	0
		Auto	1

Renewal Parts

Description		SMC Rating	Input Control Voltage	Part Number ①
Control Modules	Standard	All	120–240V AC	40888-490-01-S1FX
	Soft Stop	All		40888-490-01-A1FX
	Pump Control	All		40888-490-01-B1FX
	Preset Slow Speed	All		40888-490-01-C1FX
	SMB	24–54A		40888-490-01-D1AX
		97–135A		40888-490-01-D1BX
		180–360A		40888-490-01-D1CX
		500–650A		40888-490-01-D1DX
		720–1000A		40888-490-01-D1EX
	Accu-Stop	24–54A		40888-490-01-E1AX
		97–135A		40888-490-01-E1BX
		180–360A		40888-490-01-E1CX
		500–650A		40888-490-01-E1DX
		720–1000A		40888-490-01-E1EX
	Slow Speed with Braking	24–54A		40888-490-01-F1AX
		97–135A		40888-490-01-F1BX
		180–360A		40888-490-01-F1CX
		500–650A		40888-490-01-F1DX
		720–1000A		40888-490-01-F1EX
	Standard	All	24V AC/DC	40888-490-01-S2FX
	Soft Stop	All		40888-490-01-A2FX
	Pump Control	All		40888-490-01-B2FX
	Preset Slow Speed	All		40888-490-01-C2FX
	SMB	24–54A		40888-490-01-D2AX
		97–135A		40888-490-01-D2BX
		180–360A		40888-490-01-D2CX
		500–650A		40888-490-01-D2DX
		720–1000A		40888-490-01-D2EX
	Accu-Stop	24–54A		40888-490-01-E2AX
		97–135A		40888-490-01-E2BX
		180–360A		40888-490-01-E2CX
		500–650A		40888-490-01-E2DX
		720–1000A		40888-490-01-E2EX
	Slow Speed with Braking	24–54A		40888-490-01-F2AX
		97–135A		40888-490-01-F2BX
		180–360A		40888-490-01-F2CX
		500–650A		40888-490-01-F2DX
		720–1000A		40888-490-01-F2EX

① One piece provided per part number.

Description	SMC Rating	Line Voltage	Part Number ①
Power Modules	24A	200–480V	40382-899-02
	35A	200–480V3	40382-899-03
	54A	200–480V	40382-899-03
	97A	200–480V	40382-806-01
	135A	200–480V	40382-806-03
	180A	200–480V	40382-809-03
	240A	200–480V	40382-809-05
	360A	200–480V	40382-809-07
	500A	200–480V	40382-810-01
	650A	200–480V	40382-818-01
	720A	200–480V	40382-818-03
	850A	200–480V	40382-819-01
	1000A	200–480V	40382-819-03
	24A	200–600V	40382-899-04
	35A	200–600V	40382-899-04
	54A	200–600V	40382-899-04
	97A	200–600V	40382-806-02
	135A	200–600V	40382-806-04
	180A	200–600V	40382-809-04
	240A	200–600V	40382-809-06
	360A	200–600V	40382-809-08
	500A	200–600V	40382-810-02
	650A	200–600V	40382-818-02
	720A	200–600V	40382-818-04
	850A	200–600V	40382-819-02
	1000A	200–600V	40382-819-04

① One piece provided per part number.

Description	SMC Rating	Line Voltage	Part Number ①
Individual SCRs	24–500A	200–480V	N/A
	650A	200–480V	40382-811-01
	720A	200–480V	40382-811-03
	850A	200–480V	40382-812-03
	1000A	200–480V	40382-812-01
	24–500A	200–600V	N/A
	650A	200–600V	40382-811-02
	720A	200–600V	40382-811-04
	850A	200–600V	40382-812-04
	1000A	200–600V	40382-812-02
Interface Board	24–135A	All	N/A
	180–360A	All	40382-805-01
	500A	All	40382-814-01
	650–1000A	All	40382-814-02
Heatsink Fans	24–54A	All	N/A
	97–135A	All	40382-807-01
	180–360A	All	40382-804-01
	500A	All	40382-813-01
	650–1000A	All	40382-815-01
MOV Fuse	24–360A	All	N/A
	500–1000A	All	40382-816-01
MOV	24–360A	200–480V	②
	500–1000A	200–480V	40382-817-01
	24–360A	200–600V	②
	500–1000A	200–600V	40382-817-02

① One piece provided per part number.

② Protective modules are available as a fieldñinstalled accessory. See Appendix D.

Accessories

Description	Description/Used With	Cat. No.
Protective Modules	24–54A, 480V	150-N84
	24–54A, 600V	150-N86
	97–360A, 480V	150-N84L
	97–360A, 600V	150-N86L
Terminal Lugs	97–360A	199-LF1
	500–720A	199-LG1
	850–1000A	199-LJ1
IEC Terminal Covers	97–135A	150-NT1
	180–360A	150-NT2
Human Interface Module	IP30 (Type 1) Door Mount Bezel Kit	1201-DMA
	IP30 (Type 1) Programmer Only	1201-HAP
	IP65 (Type 4/12) Programmer Only	1201-HJP
	IP30 (Type 1) Analog Control Panel	1201-HA1
	IP30 (Type 1) Digital Control Panel	1201-HA2
	IP65 (Type 4/12) Digital Control Panel	1201-HJ2
Communication Modules	Remote I/O	1203-GD1
	DH 485 or RS 232/422/485 (DF-1)	1203-GD2
	DeviceNet	1203-GK5
	Flex I/O	1203-FB1 1203-FM1
	SLC Communication Module	1201-SM1
Communication Cables	1/3 meter, Male-Male	1202-C03
	1 meter, Male-Male	1202-C10
	3 meter, Male-Male	1202-C30
	9 meter, Male-Male	1202-C90
Converter Modules	1–12.5A	825-MCM120
	9–100A	825-MCM180
	64–360A	825-MCM630
	Fanning Strip	150-NFS

AC Alternating current.

AC Contactor An alternating current (AC) contactor is designed for the specific purpose of establishing or interrupting an AC power circuit.

Ambient Temperature Ambient temperature is the temperature of air, water, or a surrounding medium where equipment is operated or stored.

American Wire Gauge (AWG) A standard system used for designing the size of electrical conductors. Gauge numbers have an inverse relationship to size; larger numbers have a smaller cross sectional area. However, a single-strand conductor has a larger cross-sectional area than a multi-strand conductor of the same gauge so that they have the same current-carrying specification.

Block Transfer Block Transfer is the method used by a PLC to transfer data that does not require continuous updates. To perform this function, the module provides a status word to the PLC during normal discrete transfer scan. This status word occupies the first module group in the PLC I/O image table for the designated rack. The status word is then used by the PLC program to control the BTW and BTR functions of the PLC.

BTR A PLC Block Transfer Read instruction.

BTW A PLC Block Transfer Write instruction.

Buffer

1. In software terms, a register or group of registers used for temporary storage of data to compensate for transmission rate differences between the transmitter and receiving device.

2. In hardware terms, an isolating circuit used to avoid the reaction of one circuit with another.

Contactor, Reversing A method of reversing motor rotation by the use of two separate contactors, one of which produces rotation in one direction and the other produces rotation in the opposite direction. The contactors are electrically (and mechanically) interlocked so that both cannot be energized at the same time.

COP This instruction copies data from one location into another. It uses no status bits. If you need an enable bit, program a parallel output using a storage address.

Cursor The intensified or blinking element in a video display. A means for indication where data entry or editing occurs.

Cycle

1. A sequence of operations that is repeated regularly.

2. The time it takes for one sequence of operations to occur.

DH-485 Link Data Highway 485 link. An Allen-Bradley token-passing baseband link for a local area network based on the RS-485 standard.

Disable To inhibit logic from being activated.

Duty Cycle The relationship between the operating and rest times or repeatable operation at different loads.

Enable To allow an action or acceptance of data by applying an appropriate signal to the appropriate input.

Fault Any malfunction that interferes with normal system operation.

G File G File configuration is based on the devices that you have on the RIO link. G File configuration consists of setting logical device starting addresses and the logical device image size of each physical device/adapter with which the scanner communicates.

Gate The control element of an SCR (silicon controlled rectifier) commonly referred to as a thyristor. When a small positive voltage is applied to the gate momentarily, the SCR will conduct current (when the anode is positive with respect to the cathode of the SCR). Current conduction will continue even after the gate signal is removed.

Jogging Jogging is a means of accomplishing momentary motor movement by repetitive closure of a circuit using a single push button or contact element.

Jumper A short conductor with which you connect two points.

LCD Liquid crystal display, which is a reflective visual readout device commonly used in digital watches and laptop computers.

Locked Rotor Torque The minimum torque that a motor will develop at rest for all angular positions of the rotor (with rated voltage applied at rated frequency).

Mode A selected method of operation. Example: run, test, or program.

Normally Closed Contacts A set of contacts on a relay or switch that are closed when the relay is de-energized or the switch is de-activated. They are open when the relay is energized or the switch is activated.

Normally Open Contacts A set of contacts on a relay or switch that are open when the relay is de-energized or the switch is de-activated. They are closed when the relay is energized or the switch is activated.

PLC® Controller

1. An Allen-Bradley programmable controller.
2. An Allen-Bradley programmable controller with a name that includes the letters PLC. See *Programmable Controller*.

Port On a communication link, the logic circuitry or software at a station that determines its communication parameters for a particular communication channel.

Power Factor A measurement of the time phase difference between the voltage and current in an AC circuit. It is represented by the cosine of the angle of this phase difference. Power factor is the ratio of Real Power (kW) to total kVA or the ratio of actual power (W) to apparent power (volt-amperes).

Preset Speed Preset speed refers to one or more fixed speeds at which the drive will operate.

Programmable Controller A solid-state system that has a user-programmable memory for storage of instructions to implement specific functions such as I/O control, logic, timing, counting, report generation, communication, arithmetic, and data file manipulation. A controller consists of a central processor, input/output interface, and memory. A controller is designed as an industrial control system.

Protocol A set of conventions governing the format and timing of data between communication devices.

Remote I/O I/O connected to a processor across a serial link. With a serial link, remote I/O can be located long distances from the processor.

RS-232-C An EIA standard that specifies electrical, mechanical, and functional characteristics for serial binary communication circuits in a point-to-point link.

RS-422 An EIA standard that specifies electrical characteristics of balanced-voltage digital interface circuits in a point-to-point link.

RS-485 An EIA standard that specifies electrical characteristics of balanced-voltage digital interface circuits in a multi-point link.

Scrolling The vertical movement of data on a display screen caused by the dropping of one line of displayed data for each new line added at the opposite end.

Serial Pertaining to time-sequential transmission of, storage of, or logic operations on data, using the same facilities for successive parts.

Service Factor (S-F) When used on a motor nameplate, a number which indicates how much above the nameplate rating a motor can be loaded without causing serious degradation (i.e., a motor with 1.15 S-F can produce 15% greater torque than one with 1.0 S-F) to adjust measured loads in an attempt to compensate for conditions which are difficult to measure or define.

Silicon Controlled Rectifier (SCR) A solid-state switch, sometimes referred to as a thyristor. The SCR has an anode, cathode and control element called the gate. The device provides controlled rectification since it can be turned on at will. The SCR can rapidly switch large currents at high voltages. They are small in size and low in weight.

SLC™ Controller An Allen-Bradley programmable controller with a name that includes the letters SLC. See *Programmable Controller*.

Status	The condition at a particular time of any numerous entities within a system. These conditions may be represented by values in a status line.
Surge Protection	The process of absorbing and clipping voltage transients on an incoming AC line or control circuit. MOVs (Metal Oxide Varistors) and specially designed R-C networks are usually used to accomplish this.
Toggle	To switch alternately between two possible selections.
Transient	A momentary deviation in an electrical or mechanical system.
UL	Underwriters Laboratories (an approval agency).

A

accessories, D-1

Accu-Stop option, wiring diagrams, 7-14, 7-15, 7-16, 7-17

Accu-Stop, description of, 1-15

Accu-Stop option
- programming parameters for, 7-4
- sequence of operation, 7-20

B

Bulletin 825 converter module
- description, 2-16, 2-17, 2-18
- for metering, 1-10
- in a bypass configuration, 2-11
- part numbers of, D-1
- rating of, 5-2
- with fanning strip connection, 3-6, D-1
- with overload protection, 1-5
- with phase rebalance, 1-5

C

calibration, 5-1
- procedure, 5-3

clear fault, 9-1

communication, 1-11, 8-1

communication (comm) fault, 9-5

communication modules, 2-16, 8-4

control enable, 8-2

control module removal, 10-6, 10-7, 10-8, 10-9
- 180-360 amp, 10-7, 10-8
- 24-135 amp, 10-6
- 500-1000 amp, 10-9

control module replacement, 10-10

control options, 1-12, 1-13, 1-14, 1-15

control power, 3-4
- control voltage, 3-4
- control wiring, 3-4

control terminals, 3-6

controller overview, 1-1

controller setup, 4-11
- advanced setup, 4-12

controller temperature (temp), 9-5

current limit start
- description of, 1-3
- programming parameters, 4-9

D

datalinks, 8-4

diagnostics, 1-5, 1-7, 9-1

dimension drawings
- 180A–360A controllers, 2-6
- 24A, 35A, and 54A controllers, 2-4
- 500A controllers, 2-7
- 650A–1000A controllers, 2-8
- 97A and 135A controllers, 2-5

dual ramp start
- description of, 1-4
- programming parameters for, 4-10
- wiring diagram of, 3-9

E

EMC, 2-18, 2-19

enclosures, 2-2, 2-3

energy saver, 1-5

ESD, effects of, 2-2

excess starts per hour, 1-10

F

fan power, 3-5
- fan terminations, 3-5
- 180A–500A, 3-5
- 650A–1000A, 3-5
- 97A and 135A, 3-5

fault
- auxiliary contact, 9-2
- buffer, 9-2
- codes, 9-2
- definitions
- comm fault, 9-5
- controller temp, 9-5
- excess starts/hour, 9-5
- jam detection, 9-4
- line fault, 9-3
- open gate, 9-5
- overload protection, 9-4
- overvoltage and undervoltage protection, 9-3
- phase reversal, 9-3
- power loss, 9-3
- stall protection, 9-4
- underload, 9-4
- voltage unbalance, 9-4
- display, 9-1

full voltage start
- description of, 1-4
- programming parameters, 4-10
- fuses, recommended, 2-10

G

grounding provision, 3-6

H

heat dissipation, 2-2

human interface module, 7-1

human interface module (HIM), 2-12
- connecting the HIM to the controller, 2-13
- control enable, 2-13
- series A human interface modules, 2-14
- series B human interface modules, 2-15

I

inspection, 2-1

installation, 2-1

interfacing, 8-4

J

jam detection, 9-4

K

keypad description, 1-11, 4-1

L

ladder logic program, 8-9, 8-15

line fault, 1-9, 9-3

logic control data, 8-1

M

metering, 1-10, 6-1

motor data entry, 5-1
- motor codes, 5-2

motor overload protection, 2-11
- bypass configuration, 2-11
- multi-motor protection, 2-11
- series A human interface modules, 2-14
- series B human interface modules, 2-15
- two-speed motor connection, 2-11

mounting, 2-4
- dimensions, 2-4, 2-5, 2-6, 2-7, 2-8

MOV fuse replacement, 10-11

O

open gate, 1-9

options, 7-1

overload protection, 1-5

overvoltage protection, 9-3

P

parameter
- electrically erasable programmable read-only memory (EEPROM), 4-6
- listing of, 4-4, 8-3, B-1
- management of, 4-6
- modifying of, 4-8
- random access memory (RAM), 4-6
- read only memory (ROM), 4-6
- using parameter management, 4-7

phase rebalance, 1-5

phase reversal, 1-9, 9-3

power factor correction capacitors, 2-9

power loss, 9-3

power module (and interface board) resistance
- check, 10-11, 10-12, 10-13, 10-14
- feedback resistance, 10-12, 10-13
- gate lead resistance, 10-12, 10-13
- preparation, 10-11
- shorted SCR test, 10-12, 10-13
- thermistor resistance, 10-12, 10-14

precautions, 2-2

preset slow speed option
- description of, 1-13
- programming parameters for, 7-3
- sequence of operation, 7-19
- wiring diagrams, 7-14, 7-15, 7-16, 7-17

programming
- advanced, 4-12, 4-13
- basic, 4-11
- example settings, 4-13
- password, 4-5
- programming menu, 4-1

programming parameters, 7-3
- keypad, 1-11

protection and diagnostics, 1-5
- excessive starts/hour, 1-10, 9-5
- line faults, 1-9, 9-3
- open gate, 1-9, 9-5
- overload, 1-5
- overtemperature, 1-10
- stall and jam, 1-8
- underload, 1-9, 9-4

protective cover removal, 10-10

protective modules, 2-11

pump control option
- description of, 1-13
- programming parameters for, 7-3
- sequence of operation, 7-12
- wiring diagrams, 7-5, 7-6, 7-7, 7-8, 7-9, 7-10

R

receiving the controller, 2-1

renewal parts, C-1

S

scale factor conversion, 8-3

SCANport, 8-1

location, 1-11

search, 4-5

selectable kickstart, 1-3

serial communication, 8-1

Slow Speed with Braking option, description of, 1-15

Slow-speed with Braking option
- programming parameters for, 7-4
- sequence of operation, 7-25
- wiring diagrams, 7-21, 7-22, 7-23, 7-24

SMB Smart Motor Braking option
- description of, 1-14
- programming parameters for, 7-4
- sequence of operation, 7-13

SMB Smart Motor Braking option, wiring diagrams, 7-5, 7-6, 7-7, 7-8, 7-9, 7-10

SMC status data, 8-3

soft start option
- description of, 1-2
- programming parameters, 4-9

soft stop option
- description, 1-12

programming parameters for, 7-3
sequence of operation, 7-11
wiring diagrams, 7-5, 7-6, 7-7, 7-8, 7-9, 7-10

soft stop/pump control/SMB smart motor braking options, wiring diagrams, 7-5, 7-6, 7-7, 7-8, 7-9

specifications, A-1

stall protection, 9-4

stall protection and jam detection, 1-8

standard controller wiring diagrams, 3-7, 3-9, 3-10, 3-11, 3-12, 3-13, 3-14, 3-15, 3-16, 3-17, 3-18, 7-10, 7-18

starting modes, 1-2

status indication, 1-11

storing the controller, 2-1

T

terminal locations, 3-1
180–360A, 3-2
24–54A, 3-1
500A, 3-2
650–1000A, 3-3
97 and 135A, 3-1
power wiring, 3-3
24–54A, 3-3
97–1000A, 3-3

trip curves, 1-7

troubleshooting, 10-1
fault display explanation, 10-3
flowchart, 10-2
troubleshooting tables, 10-4, 10-5

U

underload, 1-9, 9-4

undervoltage, 1-9

undervoltage protection, 9-3

unpacking, 2-1

V

viewing metering data, 6-1

voltage unbalance, 1-9, 9-4

W

wiring, 3-1

Rockwell *Automation*

Rockwell Automation helps its customers receive a superior return on their investment by bringing together leading brands in industrial automation, creating a broad spectrum of easy-to-integrate products. These are supported by local technical resources available worldwide, a global network of system solutions providers, and the advanced technology resources of Rockwell.

Worldwide representation.

Argentina • Australia • Austria • Bahrain • Belgium • Bolivia • Brazil • Bulgaria • Canada • Chile • China, People's Republic of • Colombia • Costa Rica • Croatia • Cyprus Czech Republic • Denmark • Dominican Republic • Ecuador • Egypt • El Salvador • Finland • France • Germany • Ghana • Greece • Guatemala • Honduras • Hong Kong Hungary • Iceland • India • Indonesia • Iran • Ireland • Israel • Italy • Jamaica • Japan • Jordan • Korea • Kuwait • Lebanon • Macau • Malaysia • Malta • Mexico Morocco • The Netherlands • New Zealand • Nigeria • Norway • Oman • Pakistan • Panama • Peru • Philippines • Poland • Portugal • Puerto Rico • Qatar • Romania • Russia Saudi Arabia • Singapore • Slovakia • Slovenia • South Africa, Republic of • Spain • Sweden • Switzerland • Taiwan • Thailand • Trinidad • Tunisia • Turkey • United Arab Emirates United Kingdom • United States • Uruguay • Venezuela

Rockwell Automation Headquarters, 1201 South Second Street, Milwaukee, WI 53204 USA, Tel: (1) 414 382-2000, Fax: (1) 414 382-4444
Rockwell Automation European Headquarters SA/NV, avenue Herrmann Debrouxlaan, 46, 1160 Brussels, Belgium, Tel: (32) 2 663 06 00, Fax: (32) 2 663 06 40
Rockwell Automation Asia Pacific Headquarters, 27/F Citicorp Centre, 18 Whitfield Road, Causeway Bay, Hong Kong, Tel: (852) 2887 4788, Fax: (852) 2508 1846

Publication 0150-5.3 - October 1998
Supersedes Publication 0150-5.3 - September 1996
40055-145-01(C)
© 1998 Rockwell International. All Rights Reserved. Printed in USA