Technical Data

Allen-Bradley

1756 ControlLogix Chassis Specifications

Catalog Numbers 1756-A4/B, 1756-A4K/B, 1756-A4/C, 1756-A4K/C, 1756-A7/B, 1756-A7K/B, 1756-A7/C, 1756-A7K/C, 1756-A10/B, 1756-A10K/B, 1756-A10/C, 1756-A10K/C, 1756-A13/B, 1756-A13K/B, 1756-A13/C, 1756-A13K/C, 1756-A17/B, 1756-A17K/B, 1756-A17/C, 1756-A17K/C, 1756-A4LXT/B, 1756-A5XT/B, 1756-A7LXT/B, 1756-A7XT/B, 1756-A7XT/C, 1756-A10XT/C

Topic	Page
Standard ControlLogix Chassis Specifications	2
ControlLogix-XT Chassis Specifications	4
Spacing Requirements	6
Series B ControlLogix Chassis with Standard and Slim Power Supply Mounting Dimensions	8
Series C ControlLogix Chassis with Standard and Slim Power Supply Mounting Dimensions	12
Series B ControlLogix Chassis with Redundant Power Supply Mounting Dimensions	15
Series C ControlLogix Chassis with Redundant Power Supply Mounting Dimensions	19
ControlLogix Chassis Accessories	20
Additional Resources	20

The ControlLogix® system is a modular system that requires a 1756 ControlLogix chassis. The chassis are designed for only horizontal back-panel mounting. Place any module into any slot. The backplane provides a high-speed communication path between modules.

AutoCAD product drawings are available at http://www.rockwellautomation.com/global/support/drawings.page.

Standard ControlLogix Chassis Specifications

The chassis backplane provides a high-speed communication path between modules and distributes power to each of the modules within the chassis.

Technical Specifications - ControlLogix Standard Chassis (Series B)

Attribute	1756-A4/B	1756-A7/B	1756-A10/B	1756-A13/B	1756-A17/B
Backplane current, chassis/slot max @ 1.2V DC	1.5 A/–				
Backplane current, chassis/slot max @ 3.3V DC	4 A/4 A				
Backplane current, chassis/slot max @ 5.1V DC	15 A/6 A				
Backplane current, chassis/slot max @ 24V DC	2.8 A/2.8 A				
Power dissipation, max	4 W	4.5 W	5 W	5.4 W	6 W
Isolation voltage	Determined by installed power supply and modules				
Slots	4	7	10	13	17
Mounting method	Only horizontal				
Cabinet size (HxWxD), min	50.8 x 50.8 x 20.3 cm (20 x 20 x 8 in.)	50.8 x 60.9 x 20.3 cm (20 x 24 x 8 in.)	50.8 x 76.2 x 20.3 cm (20 x 30 x 8 in.)	60.9 x 76.2 x 20.3 cm (24 x 30 x 8 in.)	76.2 x 91.4 x 20.3 cm (30 x 36 x 8 in.)
Weight, approx	0.75 kg (1.7 lb)	1.10 kg (2.4 lb)	1.45 kg (3.2 lb)	1.90 kg (4.2 lb)	2.20 kg (4.8 lb)
Location	Panel				
Wire size	Functional Earth Ground - 8.3 mm^2 (8 AWG) solid or stranded copper wire rated at 90 °C (194 °F) or greater Protective Earth Ground - 2.1 mm^2 (14 AWG) solid or stranded copper wire rated at 90 °C (194 °F) or greater				
North American temperature code	T5				
IEC temperature code	T4	T5			
Enclosure type rating	None (open-style)				

Technical Specifications - ControlLogix Standard Chassis (Series C)

Attribute	1756-A4/C	1756-A7/C	1756-A10/C	1756-A13/C	1756-A17/C
Backplane current, chassis/slot max @ 1.2V DC	1.5 A/–				
Backplane current, chassis/slot max @ 3.3V DC	4 A/4 A				
Backplane current, chassis/slot max @ 5.1V DC	15 A/6 A				
Backplane current, chassis/slot max @ 24V DC	2.8 A/2.8 A				
Power dissipation, max	4 W	4.5 W	5 W	5.4 W	6 W
Isolation voltage	Determined by installed power supply and modules				
Slots	4	7	10	13	17
Mounting method	Only horizontal				
Cabinet size (HxWxD), min	50.8 x 50.8 x 20.3 cm (20 x 20 x 8 in.)	50.8 x 60.9 x 20.3 cm (20 x 24 x 8 in.)	50.8 x 76.2 x 20.3 cm (20 x 30 x 8 in.)	60.9 x 76.2 x 20.3 cm (24 x 30 x 8 in.)	76.2 x 91.4 x 20.3 cm (30 x 36 x 8 in.)
Weight, approx	0.75 kg (1.7 lb)	1.10 kg (2.4 lb)	1.45 kg (3.2 lb)	1.90 kg (4.2 lb)	2.20 kg (4.8 lb)
Location	Panel				
Wire size	Functional earth ground - 8.3 mm^2 (8 AWG) solid or stranded copper wire rated at 90 °C (194 °F) or greater Protective earth ground - 2.1 mm^2 (14 AWG) solid or stranded copper wire rated at 90 °C (194 °F) or greater				
North American temperature code	T4				
IEC temperature code	T4				
Enclosure type rating	None (open-style)				

Environmental Specifications - ControlLogix Standard Chassis

Attribute	1756-A4/B, 1756-A7/B, 1756-A10/B, 1756-A13/B, 1756-A17/B	1756-A4/C, 1756-A7/C, 1756-A10/C, 1756-A13/C, 1756-A17/C
Temperature, operating IEC 60068-2-1 (Test Ad, Operating Cold), IEC 60068-2-2 (Test Bd, Operating Dry Heat), IEC 60068-2-14 (Test Nb, Operating Thermal Shock)	0…60 °C (32…140 °F)	-25…+60 °C (-13…+140 °F)
Temperature, surrounding air	60 °C (140 °F)	
Temperature, nonoperating IEC 60068-2-1 (Test Ab, Unpackaged Nonoperating Cold), IEC 60068-2-2 (Test Bb, Unpackaged Nonoperating Dry Heat), IEC 60068-2-14 (Test Na, Unpackaged Nonoperating Thermal Shock)	-40…+85 °C (-40…+185 °F)	
Relative humidity IEC 60068-2-30 (Test Db, Unpackaged Damp Heat)	5…95% noncondensing	
Vibration IEC 60068-2-6 (Test Fc, Operating)	2 g @ 10…500 Hz	
Shock, operating IEC 60068-2-27 (Test Ea, Unpackaged Shock)	30 g	
Shock, nonoperating IEC 60068-2-27 (Test Ea, Unpackaged Shock)	50 g	30 g
Emissions	IEC 61000-6-4	
ESD immunity IEC 61000-4-2	6 kV contact discharges 8 kV air discharges	
Radiated RF immunity IEC 61000-4-3	10V/m with 1 kHz sine-wave 80% AM from 80…2000 MHz 10V/m with 200 Hz 50% Pulse 100% AM @ 900 MHz 10V/m with 200 Hz 50% Pulse 100% AM @ 1890 MHz 3V/m with 1 kHz sine-wave 80% AM from 2000…2700 MHz	

Certifications - ControlLogix Standard Chassis

Certification[1]	1756-A4/B	1756-A7/B, 1756-A10/B, 1756-A13/B, 1756-A17/B	1756-A4/C, 1756-A7/C, 1756-A10/C, 1756-A13/C, 1756-A17/C
c-UL-us	UL Listed Industrial Control Equipment, certified for US and Canada. See UL File E65584. UL Listed for Class I, Division 2 Group A,B,C,D Hazardous Locations, certified for U.S. and Canada. See UL File E194810.		
CSA	CSA Certified Process Control Equipment. See CSA File 54689. CSA Certified Process Control Equipment for Class I, Division 2 Group A,B,C,D Hazardous Locations. See CSA File 69960.		
FM	FM Approved Equipment for use in Class I Division 2 Group A,B,C,D Hazardous Locations.		
CE	European Union 2004/108/EC EMC Directive, compliant with: • EN 61326-1; Meas./Control/Lab., Industrial Requirements • EN 61000-6-2; Industrial Immunity • EN 61000-6-4; Industrial Emissions • EN 61131-2; Programmable Controllers (Clause 8, Zone A & B)		
RCM	Australian Radiocommunications Act, compliant with: EN 61000-6-4; Industrial Emissions		
Ex	European Union 94/9/EC ATEX Directive, compliant with: • EN 60079-15; Potentially Explosive Atmospheres, Protection "n" • EN 60079-0; General Requirements • II 3 G Ex nA IIC T4 Gc X	European Union 94/9/EC ATEX Directive, compliant with: • EN 60079-15; Potentially Explosive Atmospheres, Protection "n" • EN 60079-0; General Requirements • II 3 G Ex nA IIC T5 Gc X	European Union 94/9/EC ATEX Directive, compliant with: • EN 60079-15; Potentially Explosive Atmospheres, Protection "n" • EN 60079-0; General Requirements • II 3 G Ex nA IIC T4 Gc • DEMKO13ATEX1325026X
IECEx	N/A		IECEx System, compliant with: • IEC 60079-15; Potentially Explosive Atmospheres, Protection "n" • IEC 60079-0; General Requirements • II 3 G Ex nA IIC T4 Gc • IECExUL14.0008X
KC	Korean Registration of Broadcasting and Communications Equipment, compliant with: Article 58-2 of Radio Waves Act, Clause 3		
EAC	Russian Customs Union TR CU 020/2011 EMC Technical Regulation Russian Customs Union TR CU 004/2011 LV Technical Regulation		

(1) See the Product Certification link at http://www.ab.com for Declarations of Conformity, Certificates, and other certification details.

ControlLogix-XT Chassis Specifications

The ControlLogix-XT™ chassis support extreme temperature environments. The chassis are conformally coated for increased survivability in ISA G3 environments.

Technical Specifications - ControlLogix-XT Chassis

Attribute	1756-A4LXT/B	1756-A7LXT/B	1756-A5XT/B	1756-A7XT/B	1756-A7XT/C	1756-A10XT/C
Backplane current, chassis/slot max @ 1.2V DC	1.5 A/–					
Backplane current, chassis/slot max @ 3.3V DC	4 A/4 A					
Backplane current, chassis/slot max @ 5.1V DC	10 A/6 A				15 A/6 A	
Backplane current, chassis/slot max @ 24V DC	2 A/2 A				2.8 A/2.8 A	
Power dissipation, max	3.7 W	4.1 W	4.4 W		4.5 W	5.0 W
Isolation voltage	Determined by installed power supply and modules					
Slots	4	7	5	7		10
Mounting method	Horizontal only					
Cabinet size (HxWxD), min	50.8 x 50.8 x 20.3 cm (20 x 20 x 8 in.)	50.8 x 60.9 x 20.3 cm (20 x 24 x 8 in.)	50.8 x 76.2 x 20.3 cm (20 x 30 x 8 in.)	50.8 x 60.9 x 20.3 cm (20 x 24 x 8 in.)		50.8 x 85.75 x 20.3 cm (20 x 33.75 x 8 in.)
Weight, approx	0.75 kg (1.7 lb)	1.1 kg (2.4 lb)	1.45 kg (3.2 lb)	1.09 kg (2.4 lb)		1.91 kg (4.2 lb)
Location	Panel					
Wire size	Functional earth ground - 8.3 mm^2 (8 AWG) solid or stranded copper wire rated at 90 °C (194 °F) or greater Protective earth ground - 2.1 mm^2 (14 AWG) solid or stranded copper wire rated at 90 °C (194 °F) or greater					
North American temperature code	T5			T4A	T4	
IEC temperature code	T5		T4			
Enclosure type rating	None (open-style)					

Environmental Specifications - ControlLogix-XT Chassis

Attribute	1756-A4LXT/B, 1756-A7LXT/B	1756-A5XT/B, 1756-A7XT/B	1756-A7XT/C, 1756-A10XT/C
Temperature, operating IEC 60068-2-1 (Test Ad, Operating Cold), IEC 60068-2-2 (Test Bd, Operating Dry Heat), IEC 60068-2-14 (Test Nb, Operating Thermal Shock)	-25…+60 °C (-13…+140 °F)	-25…+70 °C (-13…+158 °F)	
Temperature, surrounding air	60 °C (140 °F)	70 °C (158 °F)	
Temperature, nonoperating IEC 60068-2-1 (Test Ab, Unpackaged Nonoperating Cold), IEC 60068-2-2 (Test Bb, Unpackaged Nonoperating Dry Heat), IEC 60068-2-14 (Test Na, Unpackaged Nonoperating Thermal Shock)	-40…+85 °C (-40…+185 °F)		
Relative humidity IEC 60068-2-30 (Test Db, Unpackaged Damp Heat)	5…95% noncondensing		
Vibration IEC 60068-2-6 (Test Fc, Operating)	2 g @ 10…500 Hz		
Shock, operating IEC 60068-2-27 (Test Ea, Unpackaged Shock)	30 g		
Shock, nonoperating IEC 60068-2-27 (Test Ea, Unpackaged Shock)	50 g		30 g
Emissions	IEC 61000-6-4		
ESD immunity IEC 61000-4-2	6 kV contact discharges 8 kV air discharges		
Radiated RF immunity IEC 61000-4-3	10V/m with 1 kHz sine-wave 80% AM from 80…2000 MHz 10V/m with 200 Hz 50% Pulse 100% AM @ 900 MHz 10V/m with 200 Hz 50% Pulse 100% AM @ 1890 MHz 3V/m with 1 kHz sine-wave 80% AM from 2000…2700 MHz		

Certifications - ControlLogix-XT Chassis

Certification[1]	1756-A4LXT/B, 1756-A7LXT/B	1756-A5XT/B, 1756-A7XT/B, 1756-A7XT/C, 1756-A10XT/C
c-UL-us	UL Listed Industrial Control Equipment, certified for US and Canada. See UL File E65584. UL Listed for Class I, Division 2 Group A,B,C,D Hazardous Locations, certified for U.S. and Canada. See UL File E194810.	
FM	FM Approved Equipment for use in Class I Division 2 Group A,B,C,D Hazardous Locations.	
CE	European Union 2004/108/EC EMC Directive, compliant with: • EN 61326-1; Meas./Control/Lab., Industrial Requirements • EN 61000-6-2; Industrial Immunity • EN 61000-6-4; Industrial Emissions • EN 61131-2; Programmable Controllers (Clause 8, Zone A & B)	
RCM	Australian Radiocommunications Act, compliant with: EN 61000-6-4; Industrial Emissions	
Ex	European Union 94/9/EC ATEX Directive, compliant with: • EN 60079-15; Potentially Explosive Atmospheres, Protection “n” • EN 60079-0; General Requirements • II 3 G Ex nA IIC T4 Gc X • DEMKO13ATEX1325026X	
IECEx	IECEx System, compliant with: • IEC 60079-15; Potentially Explosive Atmospheres, Protection "n" • IEC 60079-0; General Requirements • II 3 G Ex nA IIC T5 Gc • IECExUL14.0008X	IECEx System, compliant with: • IEC 60079-15; Potentially Explosive Atmospheres, Protection "n" • IEC 60079-0; General Requirements • II 3 G Ex nA IIC T4 Gc • IECExUL14.0008X
KC	Korean Registration of Broadcasting and Communications Equipment, compliant with: Article 58-2 of Radio Waves Act, Clause 3	
EAC	Russian Customs Union TR CU 020/2011 EMC Technical Regulation Russian Customs Union TR CU 004/2011 LV Technical Regulation	

(1) See the Product Certification link at http://www.ab.com for Declarations of Conformity, Certificates, and other certification details.

Spacing Requirements

When you mount a ControlLogix chassis with a standard power supply in an enclosure, follow these spacing requirements (series C chassis depicted).

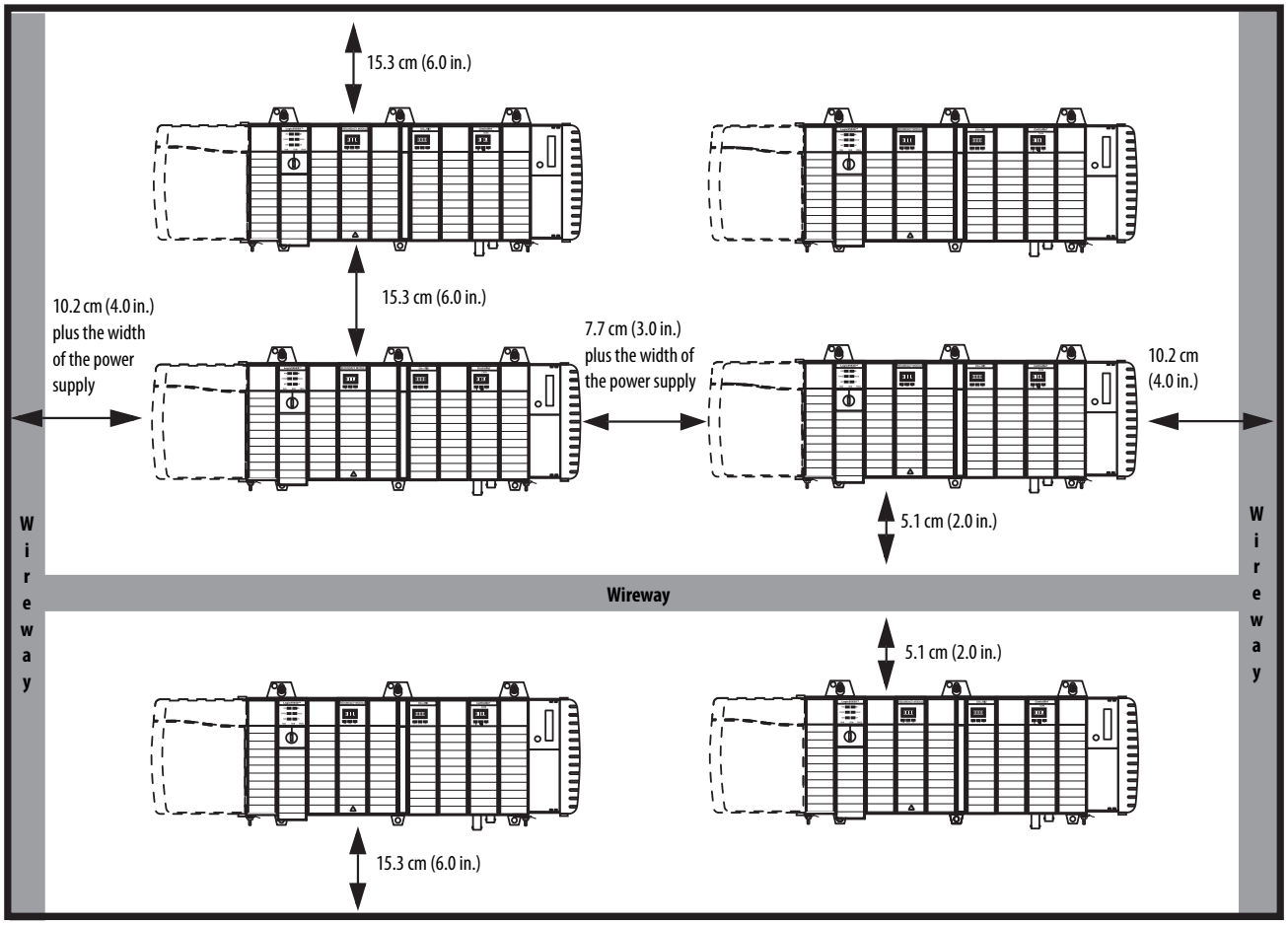

IMPORTANT The 1756-CPR2 cable has a bend radius of 12.7 cm (5.0 in.). The chassis must have a minimum clearance of 12.7 cm (5.0 in.) on the left side to route and connect the 1756-CPR2 cable. The redundant power supplies must have a minimum clearance of 12.7 cm (5.0 in.) below the supply to route and connect the 1756-CPR2 cable.

When you mount a ControlLogix chassis with a redundant power supply and a chassis adapter in an enclosure, follow these spacing requirements (series C chassis depicted).

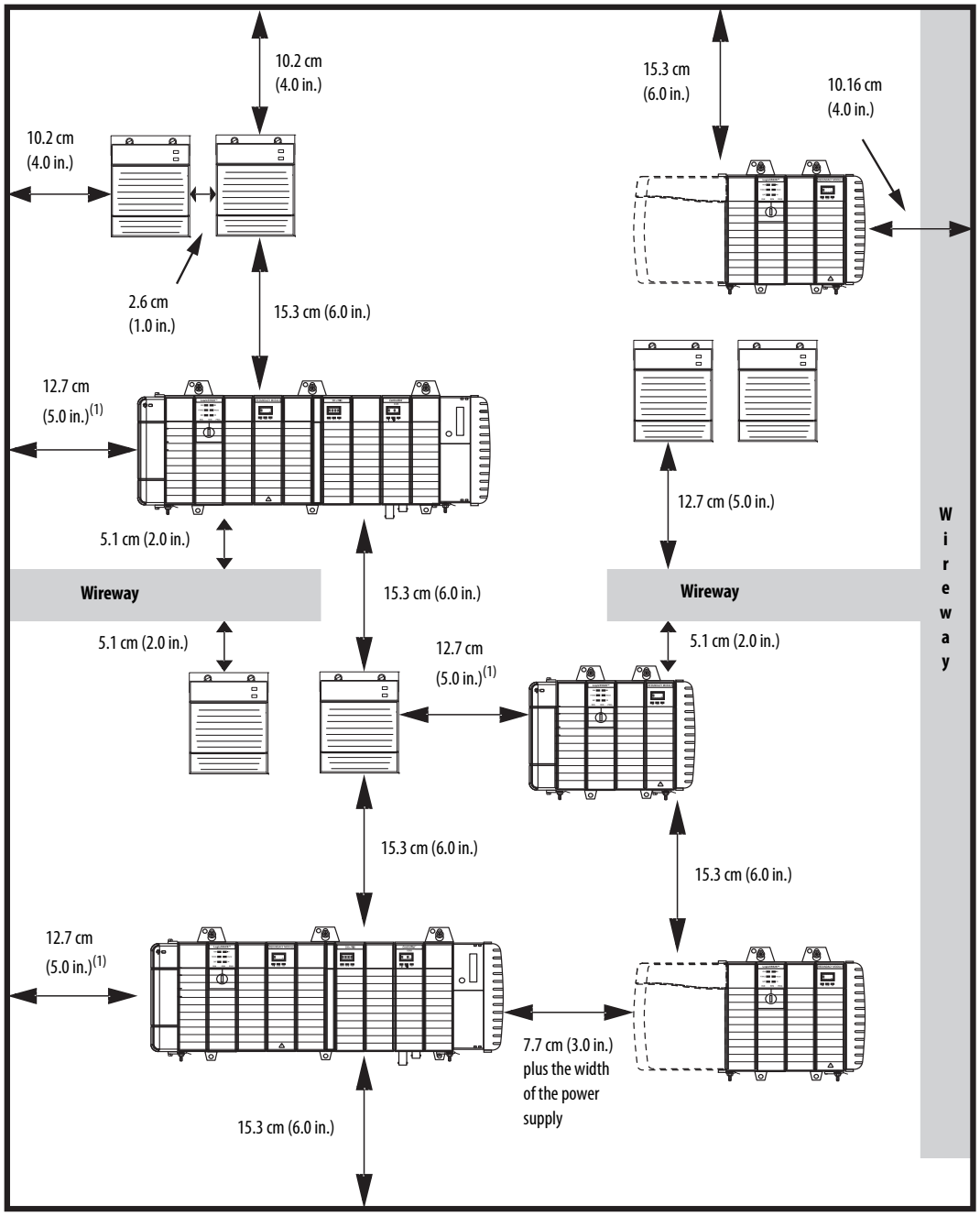

(1) The measurements for systems that use 1756-CPR2D or 1756-CPR2U cables are 10.2 cm (4.0 in.).

Series C chassis offer these features:

- Improved slot guidelines
- Improved ventilation
- Stronger mounting tabs
- Additional hole in mounting tab
- Additional ground screw

Series B ControlLogix Chassis with Standard and Slim Power Supply Mounting Dimensions

Dimensions are in cm (in.).

Chassis Common Dimensions

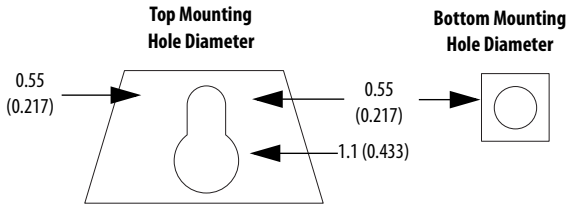

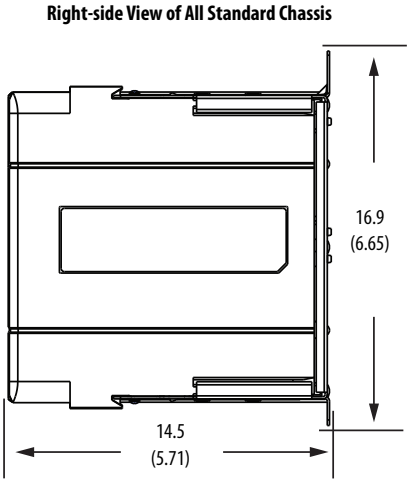

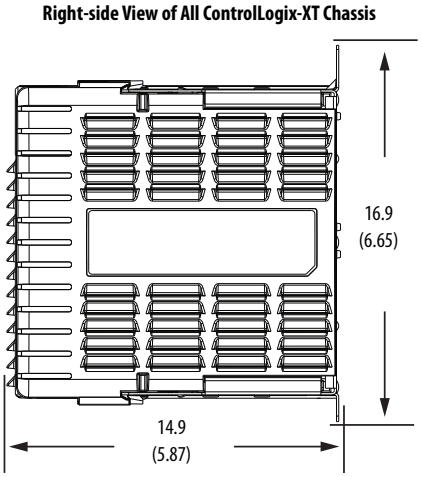

1756-A4/B Chassis and Power Supply

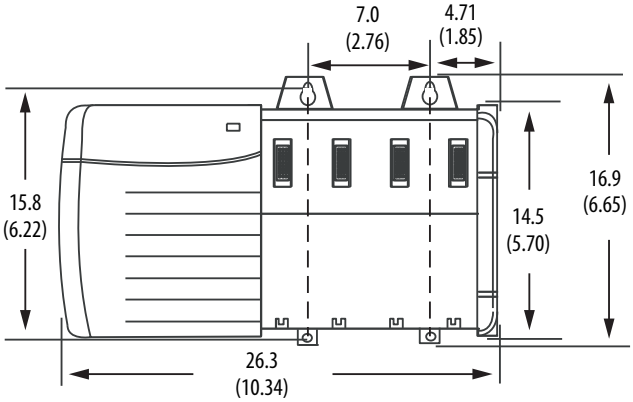

1756-A7/B Chassis and Power Supply

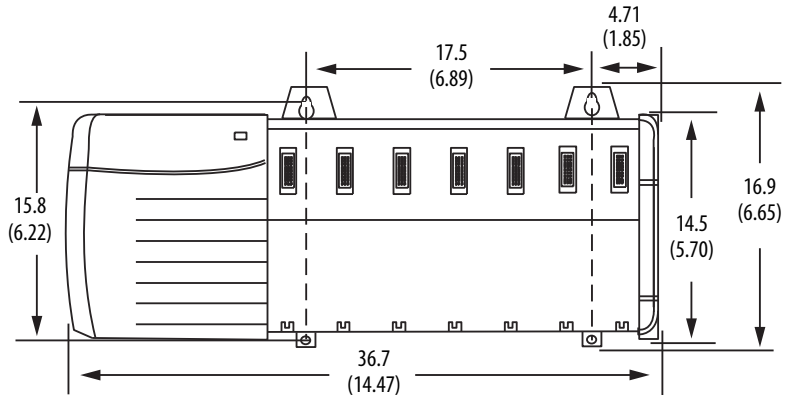

1756-A10/B Chassis and Power Supply

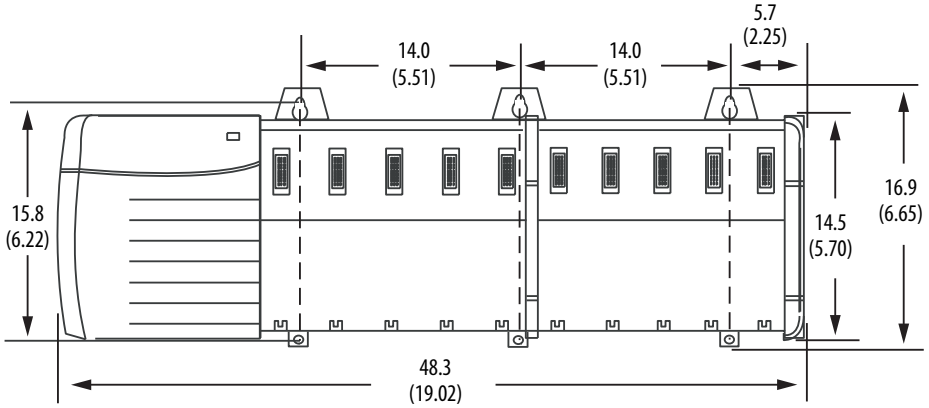

1756-A13/B Chassis and Power Supply

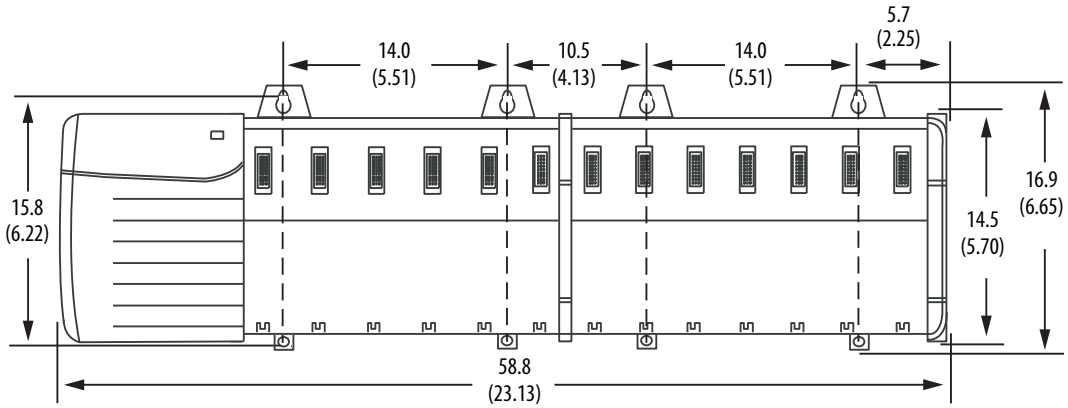

1756-A17/B Chassis and Power Supply

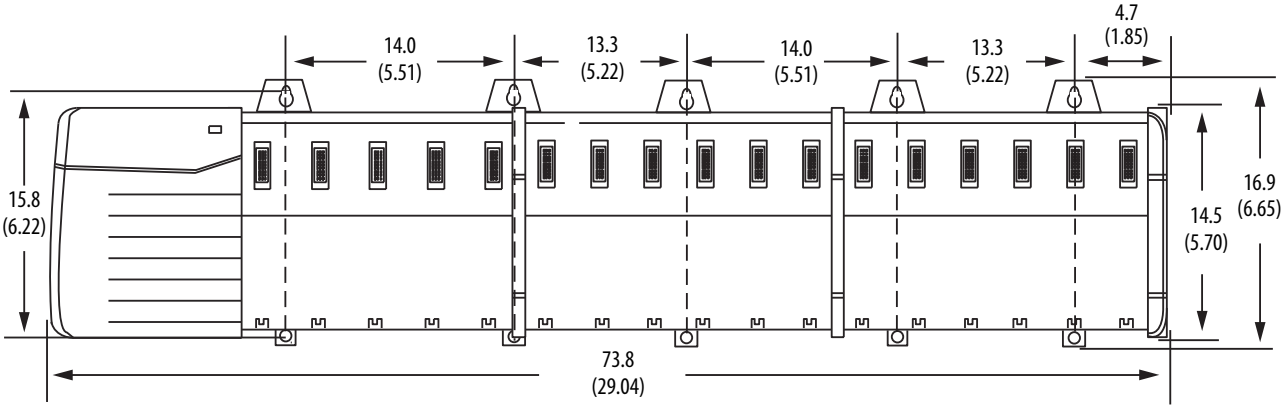

1756-A4LXT/B Chassis and Power Supply

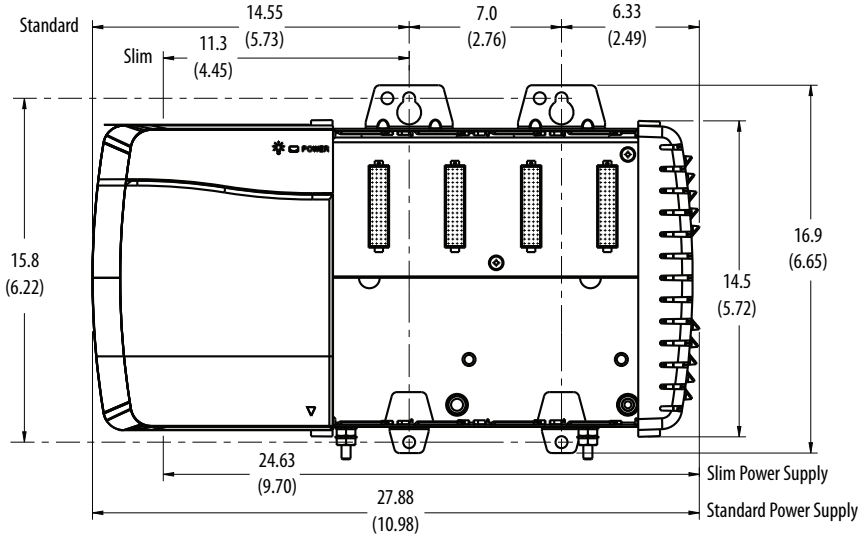

1756-A5XT/B Chassis and Power Supply

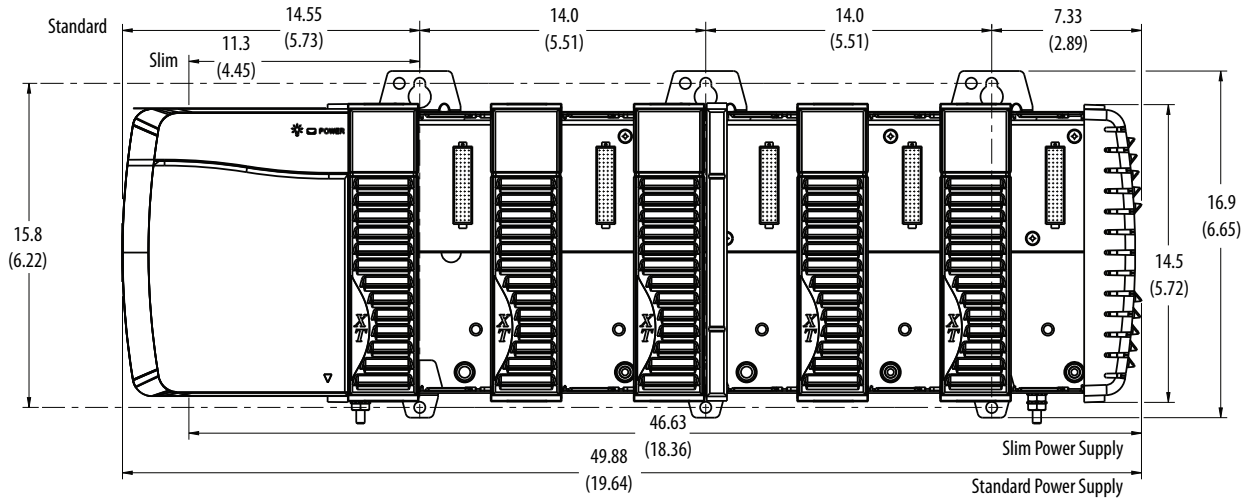

1756-A7LXT/B Chassis and Power Supply

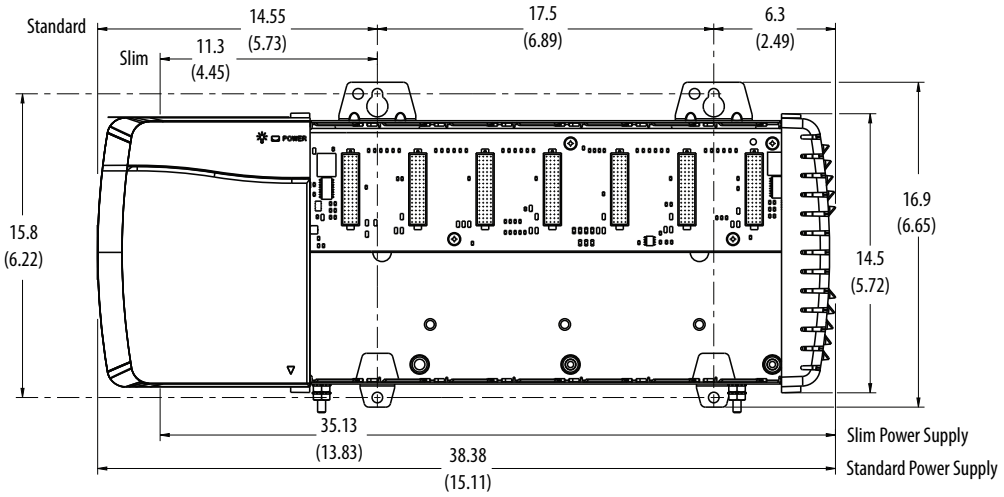

1756-A7XT/B Chassis and Power Supply

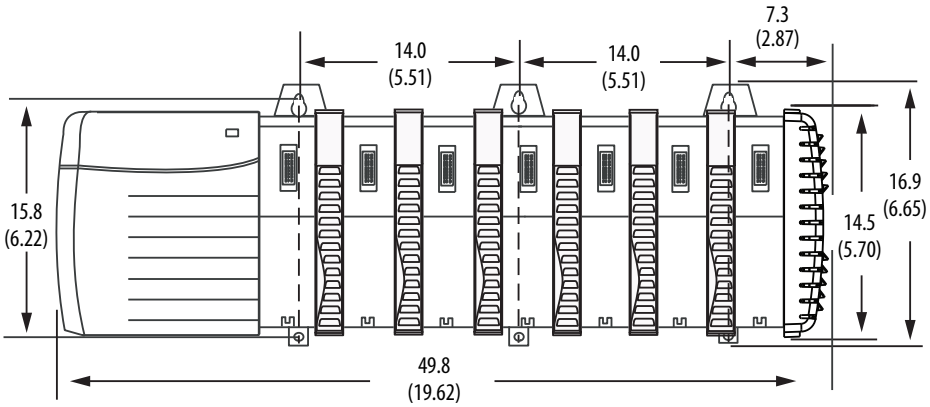

Series C ControlLogix Chassis with Standard and Slim Power Supply Mounting Dimensions

Dimensions are in cm (in.).

Chassis Common Dimensions

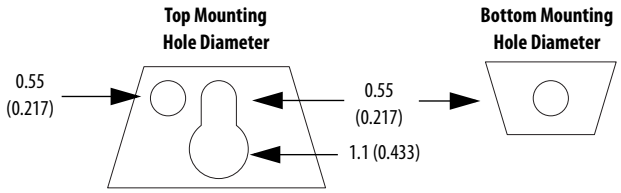

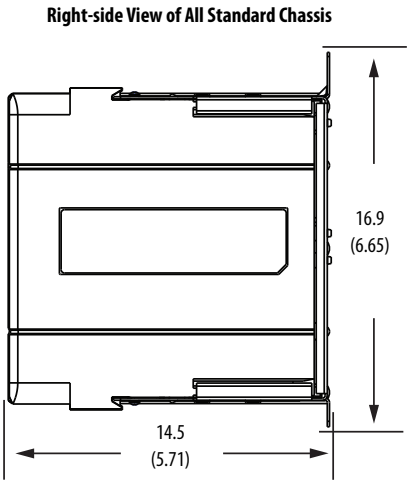

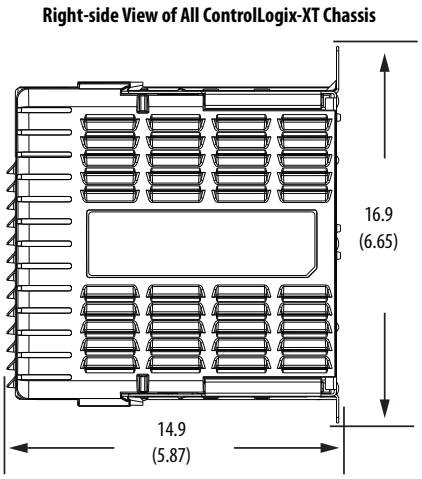

1756-A4/C Chassis and Power Supply

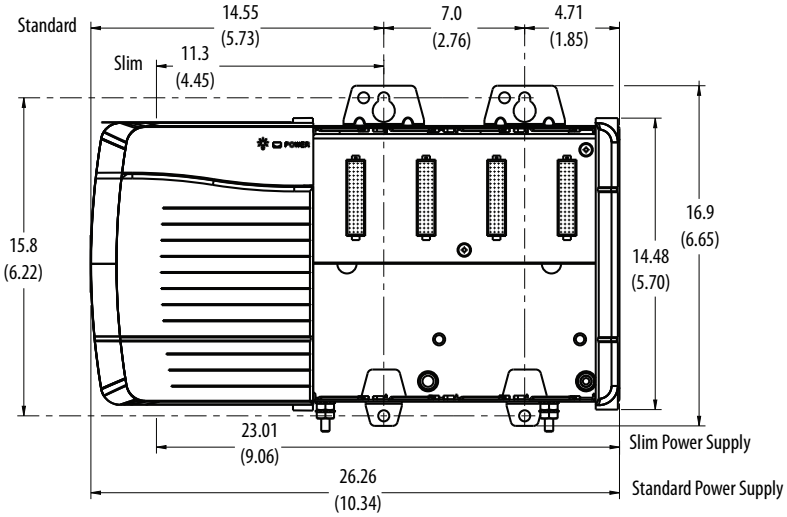

1756-A7/C Chassis and Power Supply

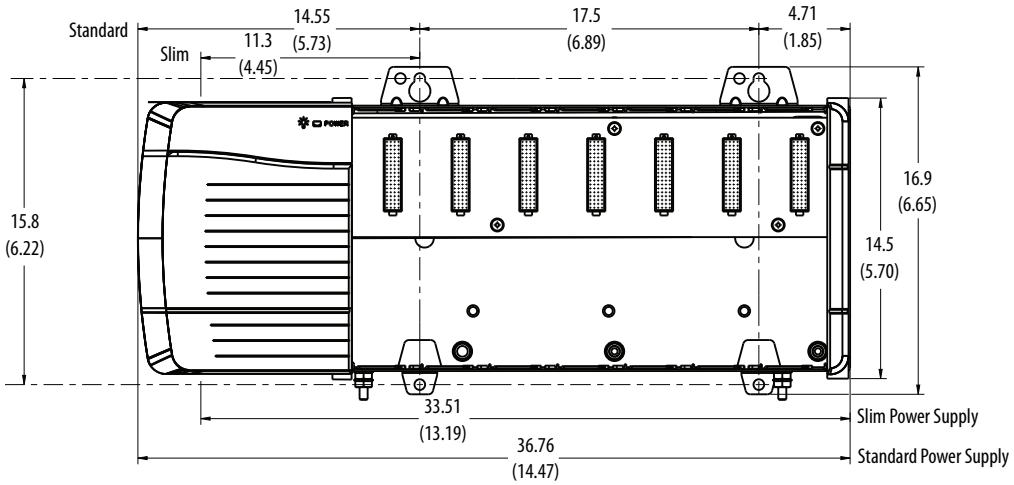

1756-A10/C Chassis and Power Supply

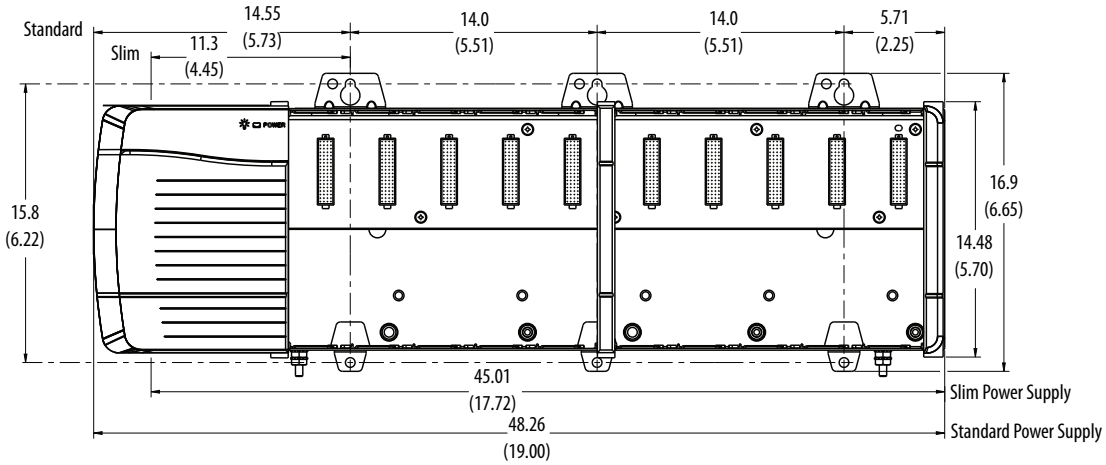

1756-A13/C Chassis and Power Supply

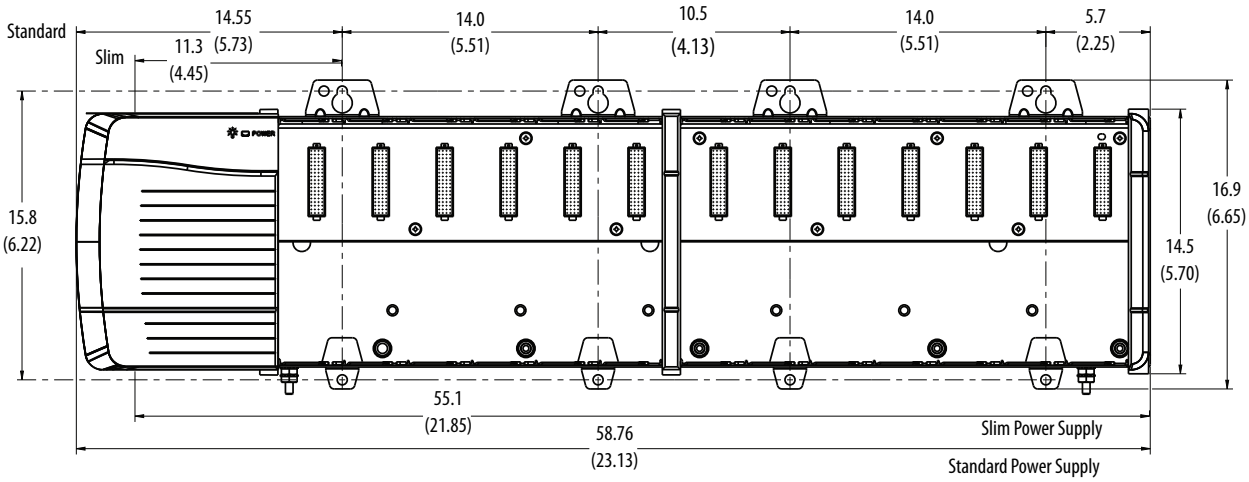

1756-A17/C Chassis and Power Supply

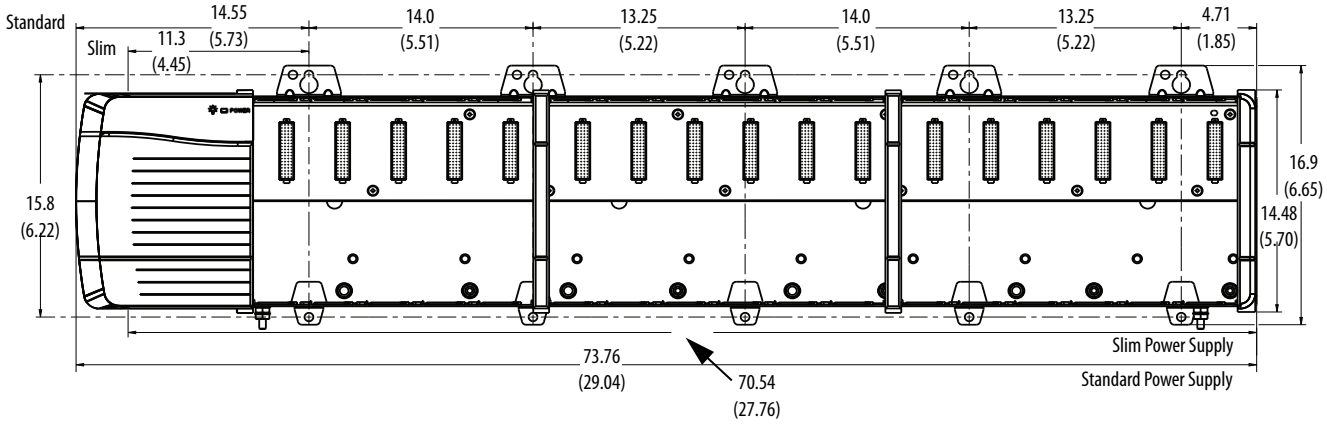

1756-A7XT/C Chassis and Power Supply

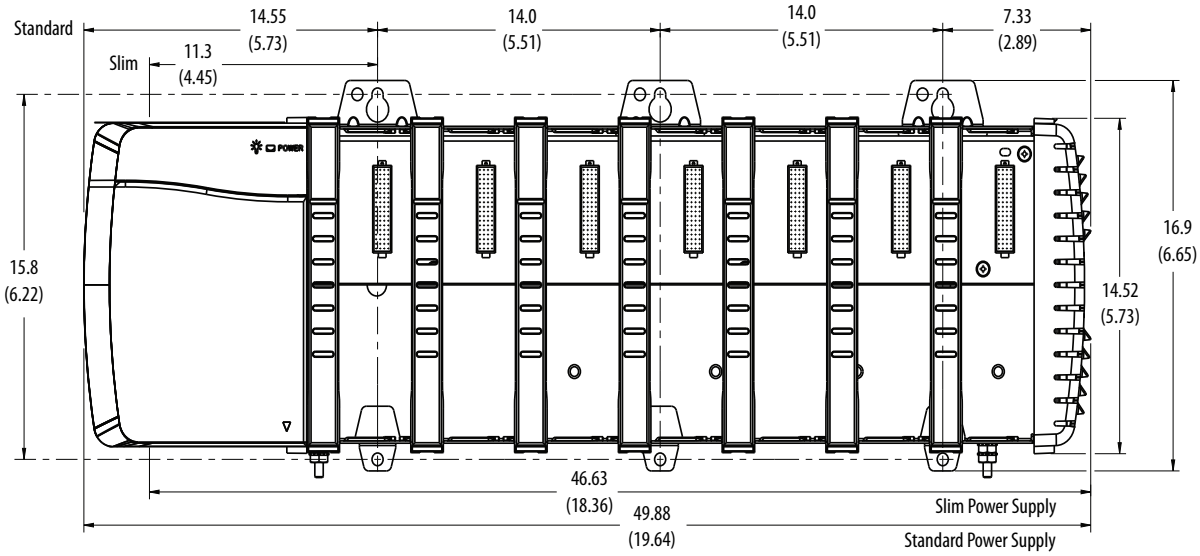

1756-A10XT Chassis and Power Supply

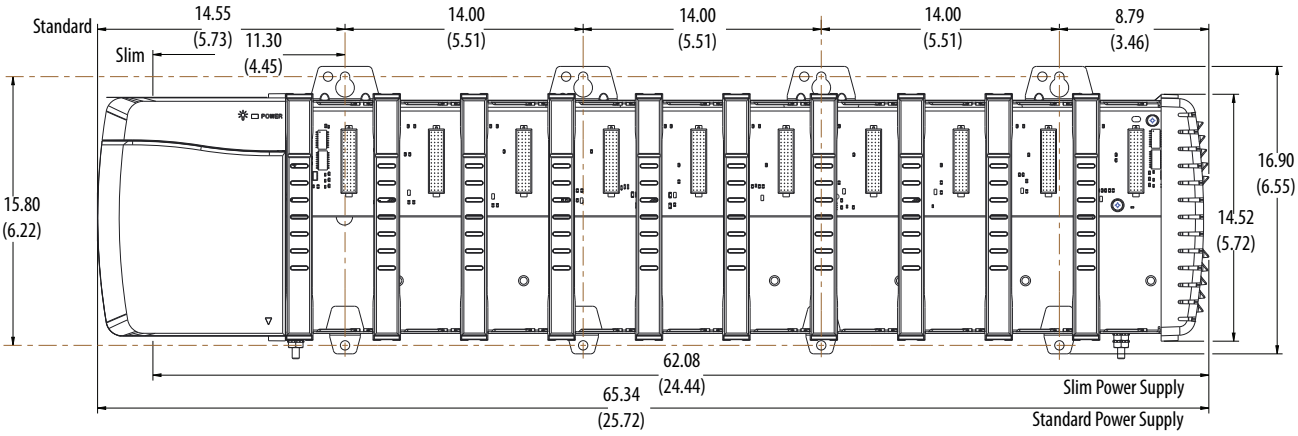

Series B ControlLogix Chassis with Redundant Power Supply Mounting Dimensions

IMPORTANT The 1756-CPR2 cable has a bend radius of 12.7 cm (5.0 in.). The chassis must have a minimum clearance of 12.7 cm (5.0 in.) on the left side to route and connect the 1756-CPR2 cable. The redundant power supplies must have a minimum clearance of 12.7 cm (5.0 in.) below the supply to route and connect the 1756-CPR2 cable.

Dimensions are in cm (in.).

Redundant Power Supplies

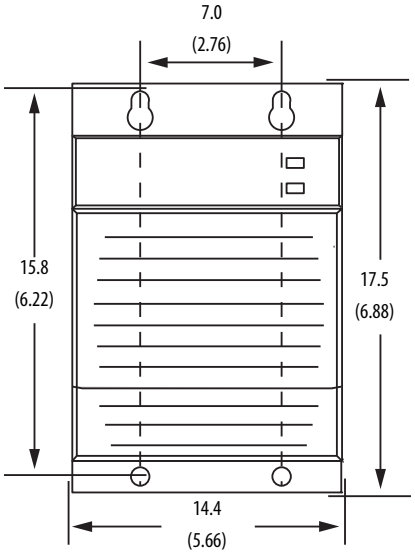

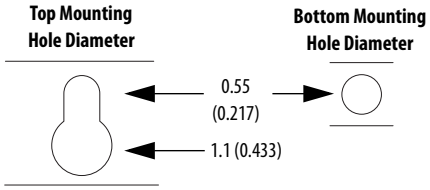

Chassis Common Dimensions

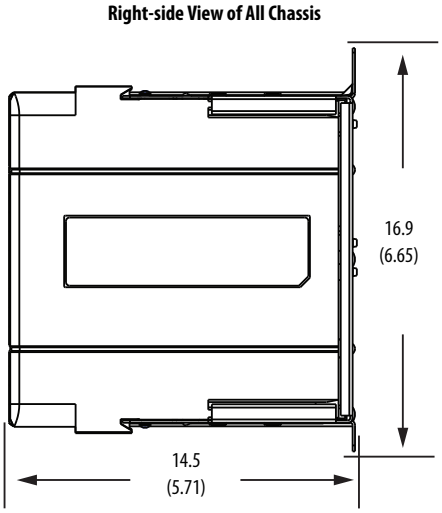

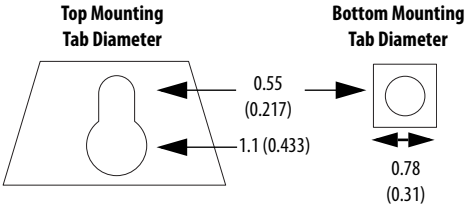

1756-A4/B Chassis and Chassis Adapter Module

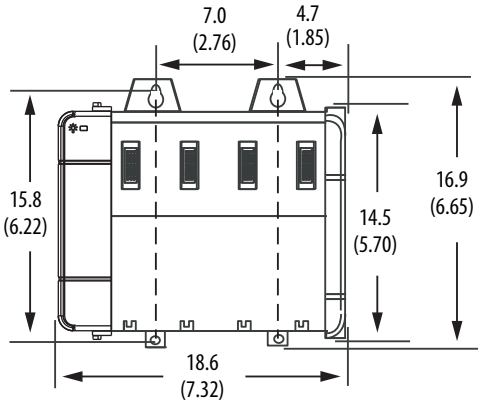

1756-A7/B Chassis and Chassis Adapter Module

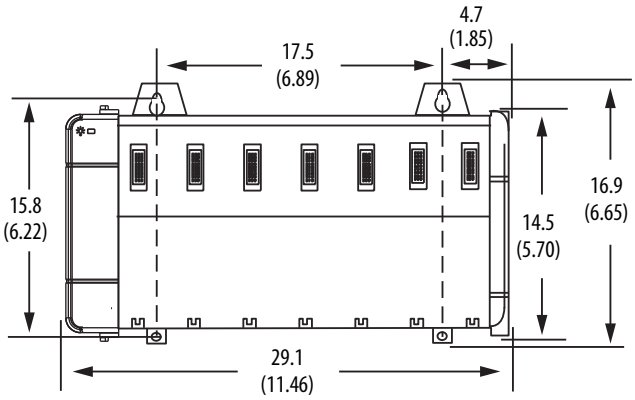

1756-A10/B Chassis and Chassis Adapter Module

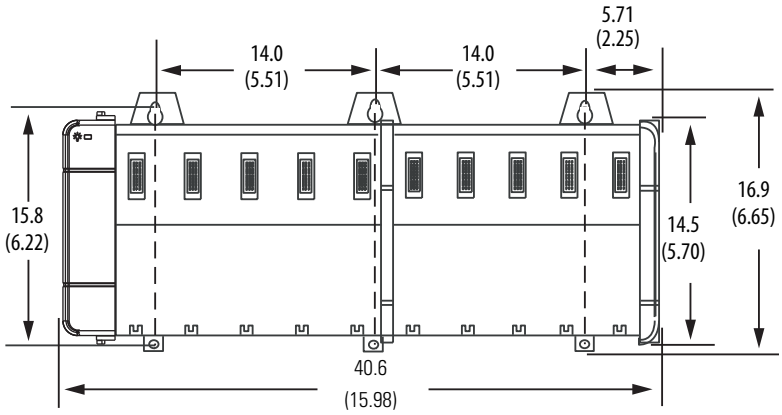

1756-A13/B Chassis and Chassis Adapter Module

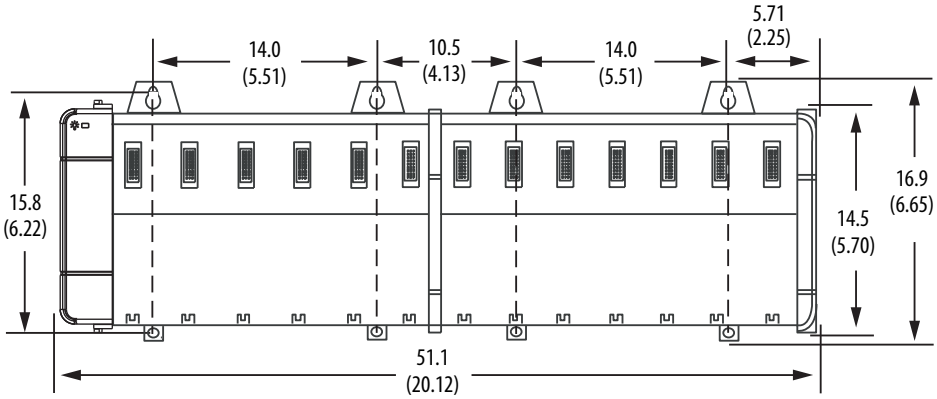

1756-A17/B Chassis and Chassis Adapter Module

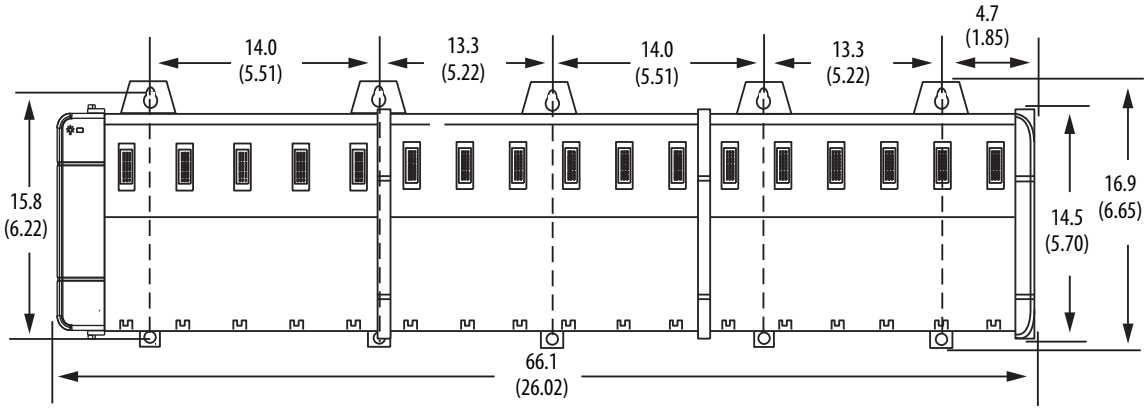

1756-A4LXT/B Chassis and Chassis Adapter

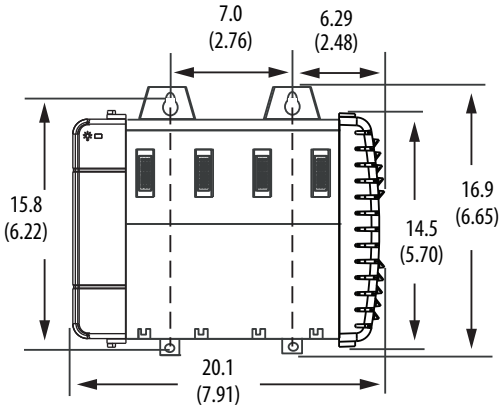

1756-A5XT/A7XT/B Chassis and Chassis Adapter

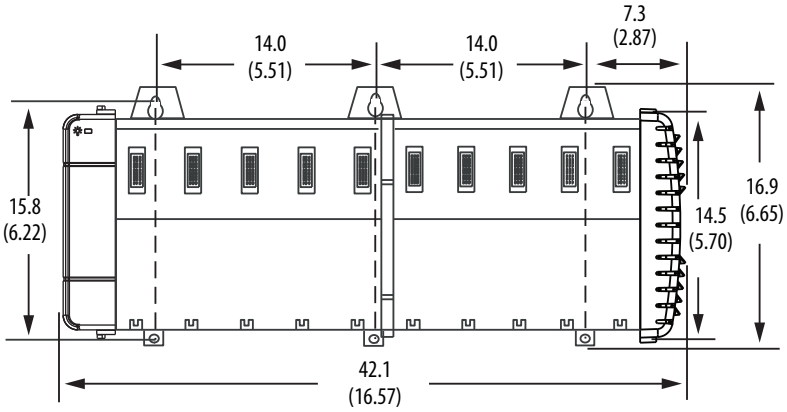

Series C ControlLogix Chassis with Redundant Power Supply Mounting Dimensions

IMPORTANT The 1756-CPR2 cable has a bend radius of 12.7 cm (5.0 in.). The chassis must have a minimum clearance of 12.7 cm (5.0 in.) on the left side to route and connect the 1756-CPR2 cable. The redundant power supplies must have a minimum clearance of 12.7 cm (5.0 in.) below the supply to route and connect the 1756-CPR2 cable.

Dimensions are in cm (in.).

Redundant Power Supplies

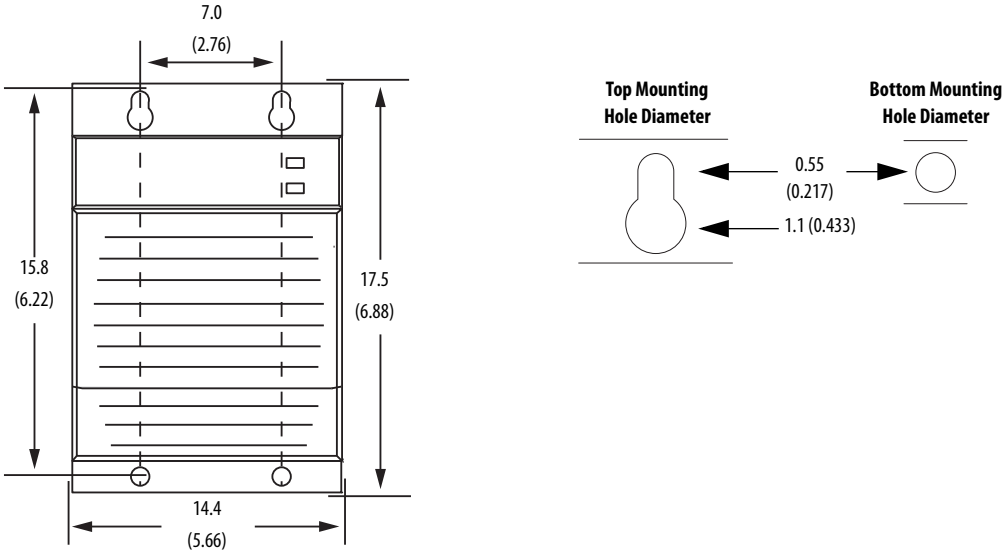

Chassis Common Dimensions

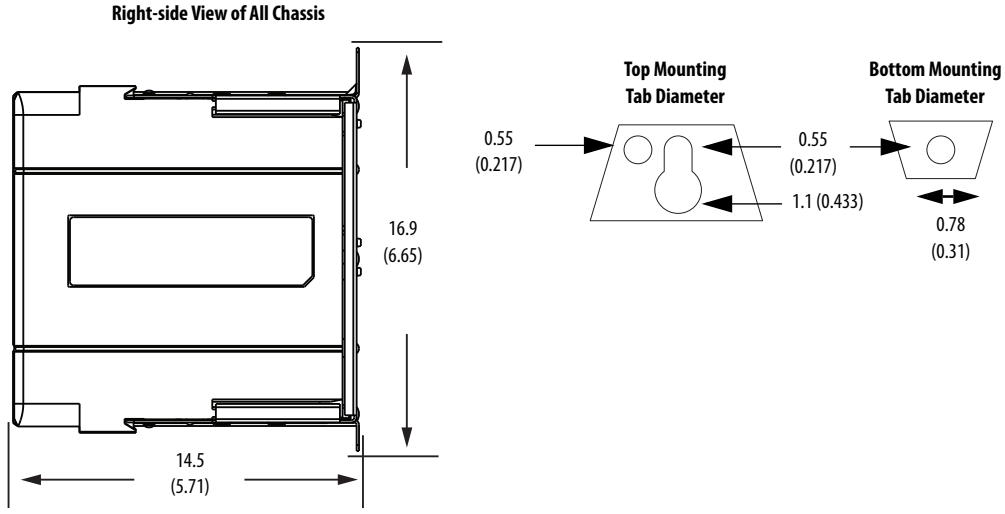

1756-A7XT/C Chassis and Chassis Adapter

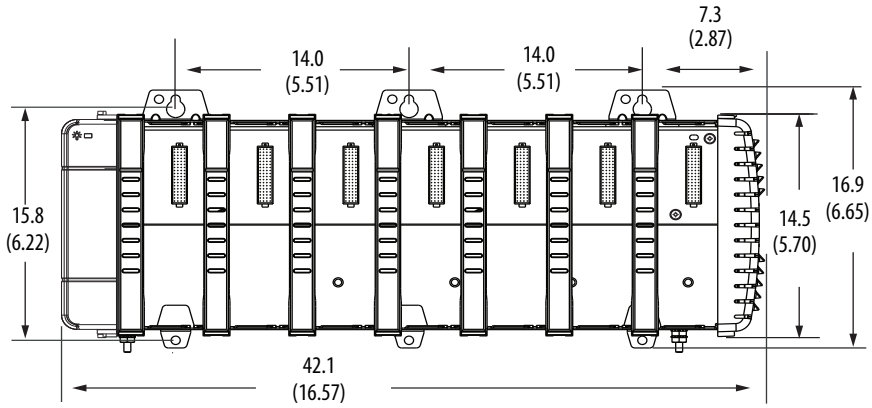

ControlLogix Chassis Accessories

Use a slot filler module to fill empty slots.

Cat. No.	Description
1756-N2	Slot filler module for empty slots in standard ControlLogix chassis
1756-N2XT	Slot filler module for empty slots in ControlLogix-XT chassis

Additional Resources

These documents contain additional information concerning related products from Rockwell Automation.

Resource	Description
ControlLogix Selection Guide, publication 1756-SG001	Provides an overview of the ControlLogix system and its products.
ControlLogix Power Supplies Specifications Technical Data, publication 1756-TD005	Provides technical specifications for ControlLogix power supplies.
ControlLogix System User Manual, publication 1756-UM001	Provides information on how to install, configure, program, and use ControlLogix controllers.
Industrial Automation Wiring and Grounding Guidelines, publication 1770-4.1	Provides general guidelines for installing a Rockwell Automation® industrial system.
Product Certifications website, http://www.ab.com	Provides declarations of conformity, certificates, and other certification details.

You can view or download publications at http://www.rockwellautomation.com/literature/. To order paper copies of technical documentation, contact your local Allen-Bradley® distributor or Rockwell Automation sales representative.

Notes:

Notes:

Notes:

Rockwell Automation Support

Use the following resources to access support information.

Technical Support Center	Knowledgebase Articles, How-to Videos, FAQs, Chat, User Forums, and Product Notification Updates.	www.rockwellautomation.com/knowledgebase
Local Technical Support Phone Numbers	Locate the phone number for your country.	www.rockwellautomation.com/global/support/get-support-now.page
Direct Dial Codes	Find the Direct Dial Code for your product. Use the code to route your call directly to a technical support engineer.	www.rockwellautomation.com/global/support/direct-dial.page
Literature Library	Installation Instructions, Manuals, Brochures, and Technical Data.	www.rockwellautomation.com/literature
Product Compatibility and Download Center (PCDC)	Get help determining how products interact, check features and capabilities, and find associated firmware.	www.rockwellautomation.com/global/support/pcdc.page

Documentation Feedback

Your comments will help us serve your documentation needs better. If you have any suggestions on how to improve this document, complete the How Are We Doing? form at http://literature.rockwellautomation.com/idc/groups/literature/documents/du/ra-du002_-en-e.pdf.

Rockwell Automation maintains current product environmental information on its website at http://www.rockwellautomation.com/rockwellautomation/about-us/sustainability-ethics/product-environmental-compliance.page.

Allen-Bradley, ControlLogix, ControlLogix-XT, LISTEN. THINK. SOLVE, Rockwell Automation, and Rockwell Software are trademarks of Rockwell Automation, Inc.
Trademarks not belonging to Rockwell Automation are property of their respective companies.

Rockwell Otomasyon Ticaret A.Ş., Kar Plaza İş Merkezi E Blok Kat:6 34752 İçerenköy, İstanbul, Tel: +90 (216) 5698400

www.rockwellautomation.com

Power, Control and Information Solutions Headquarters

Americas: Rockwell Automation, 1201 South Second Street, Milwaukee, WI 53204-2496 USA, Tel: (1) 414.382.2000, Fax: (1) 414.382.4444
Europe/Middle East/Africa: Rockwell Automation NV, Pegasus Park, De Kleetlaan 12a, 1831 Diegem, Belgium, Tel: (32) 2 663 0600, Fax: (32) 2 663 0640
Asia Pacific: Rockwell Automation, Level 14, Core F, Cyberport 3, 100 Cyberport Road, Hong Kong, Tel: (852) 2887 4788, Fax: (852) 2508 1846

Publication 1756-TD006F-EN-E - March 2017
Supersedes Publication 1756-TD006E-EN-E - October 2014

Copyright © 2017 Rockwell Automation, Inc. All rights reserved. Printed in the U.S.A.