Installation Instructions

1747-SDN DeviceNet Scanner Module

Catalog Number 1747-SDN, Series D

Topic	Page
Important User Information	2
Safety Guidelines	2
About the 1747-SDN, Series D DeviceNet Scanner Module	4
Before You Begin	7
Install DeviceNet Scanner Module	9
Interpret the LED Indicators	12
Numeric Codes and Descriptions	14
Specifications	16
Additional Resources	18

Publication 1747-IN058F-EN-P - December 2010

Important User Information

Solid state equipment has operational characteristics differing from those of electromechanical equipment. Safety Guidelines for the Application, Installation and Maintenance of Solid State Controls (Publication SGI-1.1 available from your local Rockwell Automation sales office or online at http://literature.rockwellautomation.com) describes some important differences between solid state equipment and hard-wired electromechanical devices. Because of this difference, and also because of the wide variety of uses for solid state equipment, all persons responsible for applying this equipment must satisfy themselves that each intended application of this equipment is acceptable.

In no event will Rockwell Automation, Inc. be responsible or liable for indirect or consequential damages resulting from the use or application of this equipment.

The examples and diagrams in this manual are included solely for illustrative purposes. Because of the many variables and requirements associated with any particular installation, Rockwell Automation, Inc. cannot assume responsibility or liability for actual use based on the examples and diagrams.

No patent liability is assumed by Rockwell Automation, Inc. with respect to use of information, circuits, equipment, or software described in this manual.

Reproduction of the contents of this manual, in whole or in part, without written permission of Rockwell Automation, Inc., is prohibited.

Throughout this manual, when necessary, we use notes to make you aware of safety considerations.

WARNING	Identifies information about practices or circumstances that can cause an explosion in a hazardous environment, which may lead to personal injury or death, property damage, or economic loss.
IMPORTANT	Identifies information that is critical for successful application and understanding of the product.
ATTENTION	Identifies information about practices or circumstances that can lead to personal injury or death, property damage, or economic loss. Attentions help you to identify a hazard, avoid a hazard, and recognize the consequences.
SHOCK HAZARD	Labels may be on or inside the equipment, for example, a drive or motor, to alert people that dangerous voltage may be present.
BURN HAZARD	Labels may be on or inside the equipment, for example, a drive or motor, to alert people that surfaces may reach dangerous temperatures.

Safety Guidelines

Follow these guidelines for environment and enclosure information for this equipment.

ATTENTION

This equipment is intended for use in a Pollution Degree 2 industrial environment, in overvoltage Category II applications (as defined in IEC publication 60664-1), at altitudes up to 2000 m (6562 ft) without derating.

This equipment is considered Group 1, Class A industrial equipment according to IEC/CISPR Publication 11. Without appropriate precautions, there may be potential difficulties ensuring electromagnetic compatibility in other environments due to conducted as well as radiated disturbance.

This equipment is supplied as open type equipment. It must be mounted within an enclosure that is suitably designed for those specific environmental conditions that will be present and appropriately designed to prevent personal injury resulting from accessibility to live parts. The enclosure must have suitable flame-retardant properties to prevent or minimize the spread of flame, complying with a flame spread rating of 5VA, V2, V1, V0 (or equivalent) if non-metallic. The interior of the enclosure must be accessible only by the use of a tool. Subsequent sections of this publication may contain additional information regarding specific enclosure type ratings that are required to comply with certain product safety certifications.

In addition to this publication, see:

- Industrial Automation Wiring and Grounding Guidelines, Rockwell Automation publication 1770-4.1, for additional installation requirements.
- NEMA Standard 250 and IEC 60529, as applicable, for explanations of the degrees of protection provided by different types of enclosure.

Follow these guidelines when you handle this equipment.

ATTENTION

This equipment is sensitive to electrostatic discharge that can cause internal damage and affect normal operation. Follow these guidelines when you handle this equipment.

- Touch a grounded object to discharge potential static.
- Wear an approved grounding wrist strap.
- Do not touch connectors or pins on component boards.
- Do not touch circuit components inside the equipment.
- Use a static-safe workstation if available.
- Store the equipment in appropriate static-safe packaging when not in use.

ATTENTION

To comply with UL restrictions, this equipment must be powered from a source compliant with the following:
Class 2 or Limited Voltage/Current.

About the 1747-SDN, Series D DeviceNet Scanner Module

The 1747-SDN, Series D module includes these firmware enhancements.

- ADR user memory space increased from 64K to 256K
- Support added for Online Scanlist Changes in Run Mode. This feature allows scanlist changes to be downloaded to the scanner when the both the SLC processor and the scanner are in RUN mode.
- Scanner CCV attribute supported, provides optimization for RSNetWorx.

  Refer to the SLC 500 DeviceNet Scanner Module User Manual, publication 1747-UM655, for additional information on these new enhancements.

The 1747-SDN Series D module includes all features provided in the Series C module. The module has the following software and hardware features.

Software Features

The module has these software features.

Slave Mode

Slave mode allows processor-to-processor communication and enables the scanner to perform as a slave device to another master on the network.

When the scanner module is in slave mode, it exchanges data with only one master. You control what information is exchanged through scan list configuration and associated mapping functions of RSNetWorx for DeviceNet software.

This feature has the following variations.

Module Mode	Description
Null	Contains an empty or disabled scan list (default)
Master	Serves as a master to one or more slaves but is not simultaneously serving as a slave to another master
Slave	Serves as a slave to another master
Dual	Serves as both a master to one or more slaves and as a slave to another master simultaneously

Poll

A poll message is a point-to-point transfer of data (0…255 bytes) sent by the scanner module that solicits a response from a single device. The device responds with its input data (0…255 bytes).

Strobe

A strobe message is a multicast transfer of data (64 bits in length) sent by the scanner module that solicits a response from each strobed slave device. There is one bit for each of the possible 64 node addresses. The devices respond with their data, which can be as much as 8 bytes.

Change of State

Change of state enables the scanner module to perform a scan:

- whenever a network data change occurs.
- at a user-configurable heartbeat rate.

Because data is only sent on an as-needed basis, this feature increases system performance by reducing network traffic.

Cyclic I/O

Cyclic I/O allows you to instruct the scanner module to perform a scan at a specific send rate.

Because data is only sent at a periodic rate, this feature increases system performance by reducing network traffic.

Pass-through

The SLC 500 pass-through feature allows communication with the DeviceNet network from another network. This feature can be used to adjust and fine tune the nodes on your network.

The pass-through feature is not intended to replace a 1770-KFD, 1784-PCD, 1784-PCID, or 1784-PCIDS connection to the network.

To use the pass-through feature you must meet the following hardware, software and firmware requirements.

Pass-through Requirements

SLC 500 Processor	1747-SDN Firmware	RSLinx Software	M0 and M1 Files
SLC 5/03 or later	4.015…5.001	2.10 or later	Configured for 361 words
SLC 5/03 or later	6.001 or later	2.31 or later	Configured for 395 words

U2DN module

The pass-through feature is not intended to replace a 1784-U2DN, 1770-KFD, 1784-PCD, 1784-PCID, or 1784-PCIDS connection to the network.

Hardware Features

Use this illustration to identify the external features of the scanner module.

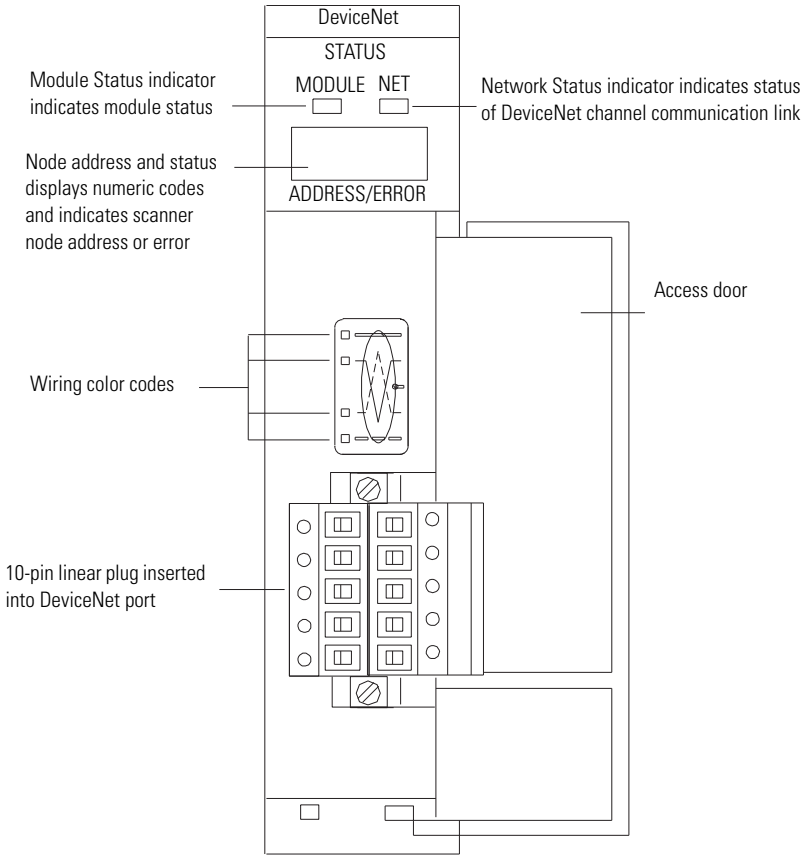

Before You Begin

Before you install your module you need the following items.

- Personal computer with Microsoft Windows 2000 or later operating system
- RSNetWorx for DeviceNet software, version 2.22 or later
- RSLogix 500 software
- SLC 1746 chassis with SLC 5/02, SLC 5/03, SLC 5/04, or SLC 5/05 processor

For network communication, you have three options.

- Use the pass-through feature to communicate with the DeviceNet network from another network. This method is intended for fine tuning and adjustment of network devices.
- Use a 1770-KFD RS-232 DeviceNet adapter or 1784-PCD, 1784-PCID, or 1784-PCIDS DeviceNet PC card. This method is necessary for a complete network configuration and real time monitoring of your network devices.
- Use a 1784-U2DN USB adapter, a 1770-KFD RS-232 DeviceNet adapter or 1784-PCD, 1784-PCID, or 1784-PCIDS DeviceNet PC card. This method is necessary for a complete network configuration and real time monitoring of your network devices.

Before you install your module you must know how to:

- program and operate an Allen-Bradley SLC 500 programmable controller.
- install and configure the devices on your DeviceNet network.

Electronic Data Sheet Requirement

This release of the scanner module requires the latest EDS file for RSLinx Classic and RSNetWorx for DeviceNet software. If the software displays the device as an **Unrecognized Device**, the EDS file must be installed.

You can download the latest EDS file online at:

http://www.ab.com/networks/eds

For FRN 8.002 and later, you can upload the embedded EDS file from the scanner module itself.

1. Open RSLinx Classic or RSNetWorx for DeviceNet software and right click on the **Unrecognized Devic**e.
2. Select **Upload EDS file from device** for RSLinx Classic software or **Register Device** for RSNetWorx for DeviceNet software.
3. Follow the instructions in the EDS wizard to complete the installation.

Perform a ControlFLASH Update

If you want to upgrade the scanner module to a newer firmware release, you must perform a ControlFLASH update. To get the kit, contact Rockwell Automation Technical Support at

440.646.5800. To install the kit, refer to the ControlFLASH Firmware Upgrade Kit User Manual, publication 1756-QS105.

IMPORTANT You can update Series A and B scanner modules up to FRN 7.006. Series C scanner modules support only FRN 8.001 to 8.006. Series D scanner modules support FRN 9.001 and later.

Confirm Processor and Adapter Compatibility

Make sure that your processor and adapter are compatible. You can use the 1747-SDN scanner module in any slot in an I/O chassis except for the leftmost, which is reserved for the SLC 500 processor.

IMPORTANT You cannot use the scanner module in a remote I/O chassis with a 1747-ASB adapter module. The adapter module does not support M-file transfer.

Install DeviceNet Scanner Module

Follow these steps to install the module.

1. Turn off the chassis power supply.

WARNING

If you insert or remove the module while backplane power is on, an electrical arc can occur. This could cause an explosion in hazardous location installations. Be sure that power is removed or the area is nonhazardous before proceeding.

2. Select a slot for the module in the chassis.

   You may use any slot except the leftmost slot, which is reserved for the SLC 500 processor.

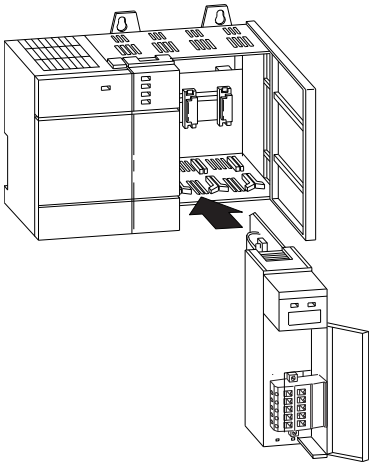

3. Insert the module into the slot you have selected.

4. Apply firm, even pressure to seat the module in the I/O chassis backplane connectors.

Connect the Module to the DeviceNet Network

ATTENTION

To comply with the CE Low Voltage Directive (LVD), DeviceNet must be powered from a source compliant with the following:

- Safety Extra Low Voltage (SELV)
- Protected Extra Low Voltage (PELV).

To comply with UL restrictions, DeviceNet must be powered from a source compliant with the following:

- Class 2
- Limited Voltage/Current.

Follow these steps to connect the module to the DeviceNet network.

1. Turn off the network power supply.

WARNING

If you connect or disconnect the communications cable with power applied to this module or any device on the network, an electrical arc can occur. This could cause an explosion in hazardous location installations.

2. Connect the DeviceNet drop line to the 10-pin linear plug by matching the wire insulation colors to the colors shown on the label.

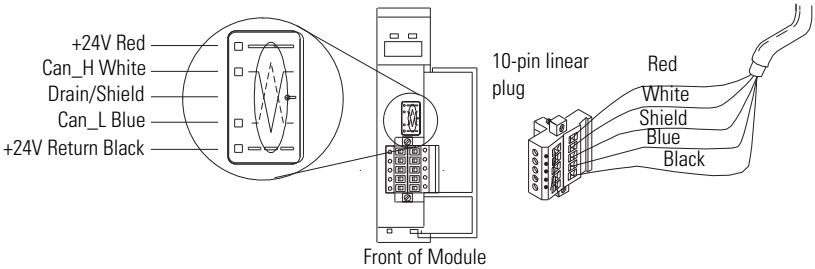

3. Locate the DeviceNet port connector on the front of the module.

4. Insert the 10-pin linear plug into the DeviceNet port connector.

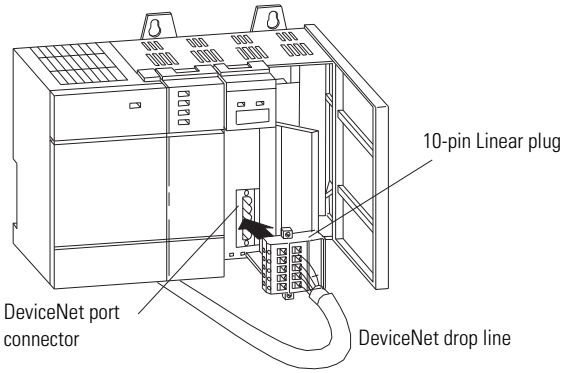

You have installed and wired your module. To operate the module you must apply power and then configure and program the SLC processor to communicate with it.

Apply Chassis Power

When you apply chassis power, the module numeric indicators cycle through the following displays.

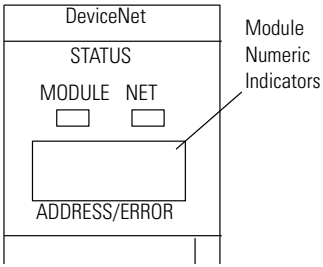

- Seven-segment lamp test (88)
- Firmware major revision (01…7F hexadecimal)
- Firmware minor revision (01…FF hexadecimal)
- Communication rate (indicates 00 for the default of 125, 01 for 250, or 02 for 500 Kbps)
- Node address (00…63 with 63 as the default)

Use the RSNetWorx for DeviceNet software to change the communication rate and node address.

Refer to the Numeric Code Display Summary table on page 14 for a complete listing of numeric displays.

Interpret the LED Indicators

The bicolor (green/red) module status indicator (MODULE) on the front of your module displays module status. It indicates whether the module has power and is functioning properly.

Module Status LED Indicator

Indicator Color	Description	Corrective Action
Off	There is no power applied to the module.	Verify power connections and apply power.
Green	The module is operating normally.	No action required.
Flashing Green	The module is not configured.	Configure the module.
Flashing Red	There is an invalid configuration.	Check configuration setup.
Red	The module has an unrecoverable fault.	Replace the module.

The DeviceNet channel has a bicolor (green/red) network status indicator (NET). The following table provides troubleshooting information about the DeviceNet channel communication link.

DeviceNet Channel Communication

Indicator Color	Description	Device Operation	Corrective Action
Off	The channel is disabled for DeviceNet communication.	The device has no power or the channel is disabled for communication due to bus off condition, loss of network power, or has been intentionally disabled.	Power-up the module, provide network power to the channel, and be sure the channel is enabled in both the module configuration table and the module command word.
Green	All slave devices in the scan list table are communicating normally with the module.	Normal operation.	None.
Flashing Green	The channel is enabled but no communication is occurring.	The two-digit numeric display for the channel indicates an error code that provides more information about the condition of the channel.	Configure the scan list table for the channel to add devices.
Flashing Red	At least one of the slave devices in the module's scan list table has failed to communicate with the module.	The two-digit numeric display for the channel displays an error code that provides more information about the condition of the channel.	Examine the failed device and the scan list table for accuracy.
Red	The module may be defective.	The communications channel has failed. The two-digit numeric display for the channel displays an error code that provides more information about the condition of the channel.	Reset module. If failures persist, replace module.

Numeric Codes and Descriptions

Your module uses numeric displays to indicate diagnostic information about the status of your module. The display flashes at 1-second intervals. The following table summarizes the meanings of the numeric codes.

Numeric Code	Description	Corrective Action
0…63	Normal operation. The numeric display indicates the 1747-SDN node address on the DeviceNet network.	None.
70	Module failed Duplicate Node Address check.	Change the module channel address to another available one. The node address you selected is already in use on that channel.
71	Illegal data in scan list table (node number alternately flashes).	Reconfigure the scan list table and remove any illegal data.
72	Slave device stopped communicating (node number alternately flashes).	Inspect the field devices and verify connections.
73	Identity information for the device does not match electronic key in scan list table entry.	Verify that the correct device is at this node number. Make sure that the device at the scrolling node address matches the desired electronic key (vendor, product code, product type).
74	Data overrun on port detected.	Modify your configuration and check for invalid data. Check network communication traffic.
75	No traffic from other modules detected on the network.	Check the network configuration. Scanlist may be empty.
76	No direct network traffic for module detected.	None. The module detects other network communication.
77	Data size expected by the device does not match scan list entry.	Reconfigure your module for the correct transmit and receive data sizes.
78	Slave device in scan list table does not exist.	Add the device to the network, or delete the scan list entry for that device.
79	Module has failed to transmit a message.	Make sure that your module is connected to a valid network. Check for disconnected cables.
80	Module is in Idle mode.	Put controller in Run mode. Enable Run bit in module command register.
81	Module is in Fault mode.	Check Module Command Register for fault bit set.

Numeric Code	Description	Corrective Action
82	Error detected in sequence of fragmented I/O messages from device.	Check scan list table entry for slave device to make sure that input and output data lengths are correct. Check slave device configuration.
83	Slave device is returning error responses when module attempts to communicate with it.	Check accuracy of scan list table entry. Check slave device configuration. Slave device may be in another master's scan list. Reboot slave device.
84	Module is initializing the DeviceNet network.	None. This code clears itself once module attempts to initialize all slave devices on the network.
85	Data size was incorrect for this device at runtime.	Slave device is transmitting incorrect length data. Verify device is not configured for variable poll connection size. Try replacing the device.
86	Device is producing zero length data (idle state) while module is in Run mode.	Check device configuration and slave node status.
87	The primary owner has not allocated the slave.	Put the primary owner online.
88	The connection choices (polled, strobed) between the primary connection and the shared input only connection do not match.	Reconfigure the shared input-only connection choices to be the same as, or a subset of, the choices for the primary connection.
89	Slave device initialization using Auto Device Replacement parameters failed.	Put the slave device into configurable mode. If the slave is configured offline, check its EDS file. Check to see if the slave device has been replaced with an incompatible device.
90	User has disabled communication port.	Check Module Command Register for DISABLE bit set.
91	Bus-off condition detected on comm port. Module is detecting communication errors.	Check DeviceNet connections and physical media integrity. Check system for failed slave devices or other possible sources of network interference.
92	No network power detected on communication port.	Provide network power. Make sure that module drop cable is providing network power to module comm port.
95	Application FLASH update in progress.	None. Do not disconnect the module while application FLASH is in progress. You will lose existing data in the module memory.
97	Module operation halted by user command.	Check Module Command Register for HALT bit set.

Numeric Code	Description	Corrective Action
98	Unrecoverable firmware failure.	Service or replace your module.
99	Unrecoverable hardware failure.	Service or replace your module.
E2	RAM Test Failure	Service or replace your module.
E4	Lost power during FLASH upgrade	Service or replace your module.
E5	No application code	Service or replace your module.
E9	Module memory has been flushed for factory default settings.	Cycle module power to recover.

Specifications

SLC DeviceNet Scanner — 1747-SDN

Attribute	Value
Module location	SLC 5/02 or later chassis
Module defaults	Node Address – 63 Baud Rate – 125 Kbps
Power consumption - Backplane current - DeviceNet	 5V DC, 500 mA 24V DC, 90 mA Class 2
Isolation voltage	30V (continuous), Basic Insulation Type Tested at 500V AC for 60 s, DeviceNet to backplane
Temperature, operating	IEC 60068-2-1 (Test Ad, Operating Cold), IEC 60068-2-2 (Test Bd, Operating Dry Heat), IEC 60068-2-14 (Test Nb, Operating Thermal Shock): 0…60 ^{o}C (32…140 ^{o}F)
Temperature, non-operating	IEC 60068-2-1 (Test Ab, Unpackaged Nonoperating Cold), IEC 60068-2-2 (Test Bc, Unpackaged Nonoperating Dry Heat), IEC 60068-2-14 (Test Na, Unpackaged Nonoperating Thermal Shock): -40…85 ^{o}C (-40…185 ^{o}F)
Relative humidity	IEC 60068-2-30 (Test Db, Unpackaged Damp Heat): 5…95% non-condensing
Vibration	IEC60068-2-6 (Test Fc, Operating): 2 g @10…500 Hz
Shock	IEC60068-2-27:1987, Test Ea (Unpackaged shock, ES#002) Operating — 30 g Non-operating — 50 g

SLC DeviceNet Scanner — 1747-SDN

Attribute	Value
Emissions	CISPR 11: Group 1, Class A (with appropriate enclosure)
ESD immunity	IEC 61000-4-2: 6 kV contact discharges 8 kV air discharges
Radiated RF immunity	IEC 61000-4-3: 10 V/m with 1 kHz sine-wave 80% AM from 80…2000 Mhz
EFT/B immunity	IEC 61000-4-4: +2 kV at 5 kHz on communication ports
Surge transient immunity	IEC 61000-4-5: ±2 kV line-earth(CM) on communications ports
Conducted RF immunity	IEC 61000-4-6: 10 Vrms with 1 kHz sine-wave 80% AM from 150 kHz…80 MHz
Magnetic field immunity	IEC 61000-4-8 30A/m long duration at 50 Hz
Enclosure type rating	None (open style)
Wiring - Size - Category[1]	 Refer to DeviceNet Media Design Installation Guide, publication DNET-UM072 2 — on communication ports
10-pin Linear plug - Torque - Catalog number	 0.6…0.8 Nm (5…7 lb-in) 1787-PLUG10R
North American temperature code	T5

(1) Use this Conductor Category information for planning conductor routing. Refer to Industrial Automation Wiring and Grounding Guidelines, publication 1770-4.1.

Certifications - 1747-SDN

Certification (when product is marked)[1]	Value
c-UL-us	UL Listed Industrial Control Equipment, certified for US and Canada. See UL File E113724. UL Listed for Class I, Division 2 Group A, B, C, D Hazardous Locations, certified for US and Canada. See UL File E10314.
CE	European Union 89/336/EEC EMC Directive, compliant with: EN 61000-6-2; Industrial Immunity EN 61000-6-4; Industrial Emissions
C-Tick	Australian Radiocommunications Act, compliant with: AS/NZS CISPR 11; Industrial Emissions
ODVA	ODVA conformance tested to ODVA DeviceNet specifications

(1) See the Product Certification link at http://www.ab.com for Declaration of Conformity, Certificates, and other certification details.

Additional Resources

Resource	Description
SLC 500 DeviceNet Scanner Module User Manual, publication 1747-UM655	Provides application examples for the DeviceNet scanner module.
ControlFlash Firmware Upgrade Kit User Manual, publication 1756-QS105	Provides instructions on using ControlFlash to upgrade the firmware.
Getting Results with RSLogix 500, publication LG500-GR002	Provides information on RSLogix 500 software.
Getting Results with RSLinx, publication LINX-GR001	Provides information on RSLinx software.
DeviceNet Media Design and Installation Guide, DNET-UM072	Provides information on using DeviceNet communication network.
Getting Results with RSNetWorx for DeviceNet, publication DNET-GR001	Provides information on using RSNetWorx for DeviceNet software.

You can view or download publications at http://literature.rockwellautomation.com. To order paper copies of technical documentation, contact your local Rockwell Automation distributor or sales representative.

North American Hazardous Location Approval

The following information applies when operating this equipment in hazardous locations:	**Informations sur l'utilisation de cet équipement en environnements dangereux:**
Products marked "CL I, DIV 2, GP A, B, C, D" are suitable for use in Class I Division 2 Groups A, B, C, D, Hazardous Locations and nonhazardous locations only. Each product is supplied with markings on the rating nameplate indicating the hazardous location temperature code. When combining products within a system, the most adverse temperature code (lowest "T" number) may be used to help determine the overall temperature code of the system. Combinations of equipment in your system are subject to investigation by the local Authority Having Jurisdiction at the time of installation.	Les produits marqués "CL I, DIV 2, GP A, B, C, D" ne conviennent qu'à une utilisation en environnements de Classe I Division 2 Groupes A, B, C, D dangereux et non dangereux. Chaque produit est livré avec des marquages sur sa plaque d'identification qui indiquent le code de température pour les environnements dangereux. Lorsque plusieurs produits sont combinés dans un système, le code de température le plus défavorable (code de température le plus faible) peut être utilisé pour déterminer le code de température global du système. Les combinaisons d'équipements dans le système sont sujettes à inspection par les autorités locales qualifiées au moment de l'installation.
WARNING **EXPLOSION HAZARD** • Do not disconnect equipment unless power has been removed or the area is known to be nonhazardous. • Do not disconnect connections to this equipment unless power has been removed or the area is known to be nonhazardous. Secure any external connections that mate to this equipment by using screws, sliding latches, threaded connectors, or other means provided with this product. • Substitution of any component may impair suitability for Class I, Division 2. • If this product contains batteries, they must only be changed in an area known to be nonhazardous.	**AVERTISSEMENT** **RISQUE D'EXPLOSION** • Couper le courant ou s'assurer que l'environnement est classé non dangereux avant de débrancher l'équipement. • Couper le courant ou s'assurer que l'environnement est classé non dangereux avant de débrancher les connecteurs. Fixer tous les connecteurs externes reliés à cet équipement à l'aide de vis, loquets coulissants, connecteurs filetés ou autres moyens fournis avec ce produit. • La substitution de tout composant peut rendre cet équipement inadapté à une utilisation en environnement de Classe I, Division 2. • S'assurer que l'environnement est classé non dangereux avant de changer les piles.

Rockwell Automation Support

Rockwell Automation provides technical information on the Web to assist you in using its products. At http://support.rockwellautomation.com, you can find technical manuals, a knowledge base of FAQs, technical and application notes, sample code and links to software service packs, and a MySupport feature that you can customize to make the best use of these tools.

For an additional level of technical phone support for installation, configuration and troubleshooting, we offer TechConnect support programs. For more information, contact your local distributor or Rockwell Automation representative, or visit http://support.rockwellautomation.com.

Installation Assistance

If you experience a problem within the first 24 hours of installation, please review the information that's contained in this manual. You can also contact a special Customer Support number for initial help in getting your product up and running.

United States	1.440.646.3434 Monday – Friday, 8 a.m. – 5 p.m. EST
Outside United States	Please contact your local Rockwell Automation representative for any technical support issues.

New Product Satisfaction Return

Rockwell Automation tests all of its products to ensure that they are fully operational when shipped from the manufacturing facility. However, if your product is not functioning and needs to be returned, follow these procedures.

United States	Contact your distributor. You must provide a Customer Support case number (call the phone number above to obtain one) to your distributor in order to complete the return process.
Outside United States	Please contact your local Rockwell Automation representative for the return procedure.

Rockwell Auotmation, Allen-Bradley, TechConnect, SLC, SLC 500, SLC 5/02, SLC 5/03, SLC 5/04, SLC 5/05, RSLinx, RSLogix 500, and RSNetWorx are trademarks of Rockwell Automation, Inc.

Trademarks not belonging to Rockwell Automation are property of their respective companies.

Rockwell Otomasyon Ticaret A.Ş., Kar Plaza İş Merkezi E Blok Kat:6 34752 İçerenköy, İstanbul, Tel: +90 (216) 5698400

www.rockwellautomation.com

Power, Control and Information Solutions Headquarters

Americas: Rockwell Automation, 1201 South Second Street, Milwaukee, WI 53204-2496 USA, Tel: (1) 414.382.2000, Fax: (1) 414.382.4444
Europe/Middle East/Africa: Rockwell Automation, Vorstlaan/Boulevard du Souverain 36, 1170 Brussels, Belgium, Tel: (32) 2 663 0600, Fax: (32) 2 663 0640
Asia Pacific: Rockwell Automation, Level 14, Core F, Cyberport 3, 100 Cyberport Road, Hong Kong, Tel: (852) 2887 4788, Fax: (852) 2508 1846

Publication 1747-IN058F-EN-P - December 2010 PN-93987

Supersedes Publication 1747-IN058E-EN-P - February 2007

Copyright © 2010 Rockwell Automation, Inc. All rights reserved. Printed in the U.S.A.