LISTEN.
THINK.
SOLVE.SM

SELECTION GUIDE

ArmorStart® Distributed Motor Controller and ArmorConnect® Power Media

BULLETINS 280/281, 283, 284, 888, 889, 898

Allen-Bradley • Rockwell Software

Rockwell Automation

ArmorStart Distributed Motor Controllers

Quick-Selection Guide 2
Bulletin 280/281 ArmorStart Distributed Motor Controllers 3
Bulletin 283 ArmorStart Distributed Motor Controllers 18
Bulletin 284 ArmorStart Distributed Motor Controllers 34

ArmorConnect Power Media

General Information

Quick-Selection Guide 58
Selection Criteria 59

Three-Phase Power Media

Three-Phase Power Cordsets & Patchcords - Trunk Cable 61
Three-Phase Power Cordsets & Patchcords - Drop Cable 62
Three-Phase Power Tees & Reducer - 4-Pole 63
Three-Phase Power Receptacles, Male & Female 65

Control Power Media

Trunk and Drop Cables 67
T-Ports 68
Receptacles 69
Shorting Plugs 70

Three-Phase and Control Power Media

Accessories 71

Bulletin	280D/281D	280A/281A	283D	283A	284D	284A
Horsepower Range:						
0.5…10 Hp (0.37…7.5 kW)	✓	✓	—	—	—	—
0.5…10 Hp (0.37…5.5 kW)	—	—	✓	✓	—	—
0.5…5 Hp (0.4…3.0 kW)	—	—	—	—	✓	✓
Starting Method:						
Full-Voltage and Reversing	✓	✓	—	—	—	—
Current Limit, Soft Start including Soft Stop	—	—	✓	✓	—	—
Sensorless Vector Performance	—	—	—	—	✓	✓
Sensorless Vector Control	—	—	—	—	✓	✓
Environmental Rating:						
IP67/NEMA Type 4	✓	✓	✓	✓	✓	✓
NEMA Type 4X	✓	—	✓	—	✓	—
Control Voltage Ratings: 24V DC, 120V AC, and 240V AC	✓	✓	✓	✓	✓	✓
Operational Voltage Ratings:						
200…480V AC	✓	✓	✓	✓	—	—
200…240V AC	—	—	—	—	✓	✓
380…480V AC	—	—	—	—	✓	✓
500…575V AC	✓	✓	✓	✓	✓	✓
Rated for Group Motor Installations	✓	✓	✓	✓	✓	✓
Network Communications with DeviceNet™ including DeviceLogix™	✓	✓	✓	✓	✓	✓
I/O Capability:						
Four Inputs and Two Outputs	✓	—	✓	—	✓	—
Two Outputs	—	✓	—	✓	—	✓
Network Communications via ArmorPoint® Distributed I/O Products (DeviceNet, EtherNet, ControlNet™)	—	✓	—	✓	—	✓
I/O Expansion with ArmorPoint Distributed I/O Products	✓	✓	✓	✓	✓	✓
LED Status Indication	✓	✓	✓	✓	✓	✓
Gland Plate Entry:						
Conduit Entrance	✓	✓	✓	✓	✓	✓
ArmorConnect Power Media	✓	✓	✓	✓	✓	✓
Quick Disconnects (I/O, Communications, Motor Connection, Three-Phase and Control Power)	✓	✓	✓	✓	✓	✓
Extended Length Motor and Brake Cables	✓	✓	✓	✓	✓	✓
Factory Installed Options:						
HOA Keypad	✓	✓	✓	✓	✓	✓
Safety Monitor	✓	✓	✓	✓	✓	✓
Control Brake Contactor	—	—	—	—	✓	✓
Source Brake Contactor	—	—	✓	✓	✓	✓
Dynamic Brake Connector	—	—	—	—	✓	✓
Output Contactor	—	—	—	—	✓	✓
EMI Filter	—	—	—	—	✓	✓
Shielded Motor Cable	—	—	—	—	✓	✓
0…10V Analog Input	—	—	—	—	✓	✓
Product Selection	**Page 3**		**Page 19**		**Page 35**	

ArmorStart® Distributed Motor Controller

Overview

280/281 ArmorStart Distributed Motor Controller

- On-Machine starting solution
- Full-voltage and reversing
- Horsepower range 0.5…10 Hp (0.37…7.5 kW)
- Robust IP67/NEMA Type 4 and NEMA Type 4X enclosure rating
- Modular plug and play design
- Quick disconnect connections for I/O, communications, motor, three-phase and control power
- Gland plate entry: conduit entrance or ArmorConnect power media
- Four inputs and two outputs (expandable with ArmorPoint)
- LED status indication
- DeviceNet communications
- DeviceLogix component technology
- Peer-to-peer communication (ZIP)
- Connectivity to ArmorPoint distributed I/O products
- ControlNet and EtherNet communications via ArmorPoint
- Factory installed options:
  - Hand/Off/Auto (HOA) keypad configuration
  - Safety monitor

Table of Contents

Product Overview ..... this page
Product Selection 3
Options/Accessories 6
Specifications..... 10
Approx. Dimensions . 13

Standards Compliance

UL 508
CSA C22.2, No. 14
EN/IEC 60947-1
CE Marked per Low Voltage Directive 73/23/EEC and EMC Directive 89/336/EEC
CCC

Certifications

cULus (File No. E3125, Guides NLDX, NLDX7)

Description

The Bulletin 280/281 ArmorStart Distributed Motor Controller is an integrated, pre-engineered, starter for full-voltage and reversing applications. The ArmorStart offers a robust IP67/NEMA Type 4 enclosure design, which is suitable for water wash-down environments. The ArmorStart products are also offered with NEMA Type 4X rating, suitable for environment wash down with caustic chemicals used in the food and beverage industry. The wash-down rating is 1000 psi for the NEMA Type 4X rated devices. The modular plug-and-play design offers simplicity in wiring the installation. The quick disconnects for the I/O, communications, and motor connection reduce the wiring time and eliminate wiring errors. The ArmorStart offers as standard, four DC inputs and two relay outputs to be used with sensors and actuators respectively, for monitoring and controlling the application process. The ArmorStart's LED status indication and built-in diagnostics capabilities allows ease of maintenance and troubleshooting. The optional Hand/Off/Auto (HOA) keypad allows for local start/stop control at the ArmorStart Distributed Motor Controller.

The Bulletin 280/281 ArmorStart Distributed Motor Controller offers short-circuit protection per UL 508 and IEC 60947. The ArmorStart is rated for local-disconnect service by incorporating the Bulletin 140 Motor Protector as the local-disconnect, eliminating the need for additional components. The ArmorStart Distributed Motor Controllers are suitable for group motor installations.

Mode of Operation

Full-Voltage Start

This method is used in applications requiring across-the-line starting. Full in-rush current and locked-rotor torque are realized. The ArmorStart Bulletin 280 offers full-voltage starting, and the Bulletin 281 offers full-voltage starting for reversing applications.

Description of Features

Overload Protection

The Bulletin 280/281 ArmorStart Distributed Motor Controller incorporates, as standard, electronic motor overload protection. This overload protection is accomplished electronically with an I^2t algorithm. The ArmorStart's overload protection is programmable via the communication network providing the user with flexibility. The overload trip class can be selected for class 10, 15, or 20 protection. Ambient insensitivity is inherent in the electronic design of the overload.

Inputs

The inputs are single keyed (two inputs per connector), which are sourced from DeviceNet power (24V DC), with LED status indication.

Outputs

Two dual-key relay output connectors are supplied as standard. The outputs are sourced from the control voltage power, which can be either, 24V DC, 120V AC, or 240V AC with LED status indication.

Motor Cable

With every Bulletin 280/281 ArmorStart Distributed Motor Controller, a 3-meter unshielded 4-conductor cordset is provided with each unit as standard.

Gland Plate Entrance

The ArmorStart product offers two different methods for connecting incoming three-phase and control power to the device. One method offered is the traditional conduit entrance which provides a 3/4 and 1 in. conduit hole opening for wiring three-phase and control power. The second method offers connectivity to the ArmorConnect power media. Factory installed receptacles are provided for connectivity to both three-phase and control power media.

LED Status Indication

The LED Status Indication provides four status LEDs and a Reset button. The LEDs provide status indication for the following:

- **POWER LED**
  The LED is illuminated solid green when control power is present and with the proper polarity
- **RUN LED**
  This LED is illuminated solid green when a start command and control power are present
- **NETWORK LED**
  This bicolor (red/green) LEDs indicates the status of the communication link
- **FAULT LED**
  Indicates Controller Fault (trip) condition
- The "Reset Button" as a local trip reset.

Fault Diagnostics

Fault diagnostics capabilities built in the ArmorStart Distributed Motor Controller help you pinpoint a problem for easy troubleshooting and quick re-starting.

- Short Circuit
- Overload
- Phase Loss
- Control Power Loss
- Control Power Fuse Detection
- I/O Fault
- Output Power Fuse Detection
- Overtemperature
- Phase Imbalance
- DeviceNet Power Loss
- EEPROM Fault
- Hardware Fault

Network and Expandable I/O Capabilities

The Bulletin 280D/281D ArmorStart Distributed Motor Controller delivers enhanced control to access parameter settings and provides fault diagnostics and remote start/stop control. DeviceNet is the communication protocol provided with the ArmorStart, including DeviceLogix.

The Bulletin 280A/281A ArmorStart Distributed Motor Controller allows connectivity to the ArmorPoint backplane. The ArmorPoint I/O system can communicate using DeviceNet, ControlNet, or EtherNet communication protocols. In addition to the different network protocols, the ArmorPoint Distributed I/O products allow the I/O capability to be expanded beyond the standard two outputs. The two dual-key relay output connectors are supplied as standard. The outputs are sourced from the control voltage power of 24V DC, 120V AC, or 240V AC. LED status indication is also provided. When using the ArmorPoint, a maximum of two ArmorPoint Distributed Motor Controllers can be connected to the ArmorPoint Distributed I/O product.

Cat. No. Explanation

Examples given in this section are for reference purposes. This basic explanation should not be used for product selection; not all combinations will produce a valid catalog number.

280	D	–	F	12Z	–	10	C	–	CR	–	Option 1	–	Option 2
a	*b*		*c*	*d*		*e*	*f*		*g*		*h*		*i*

a

Bulletin Number	
280	Full Voltage Starter
281	Reversing Starter

b

Communications	
D	DeviceNet™
A	ArmorPoint

c

Enclosure Type	
F	Type 4 (IP67)
S	Type 4X

d

Contactor Size/Control Voltage		
24V DC	120V AC	240V AC
12Z	12D	12B
23Z	23D	23B

e

Short Circuit Protection (Motor Circuit Protector)	
10	10 A Rated Device
25	25 A Rated Device

f

Overload Selection Current Range	
A	0.24…1.2 A
B	0.5…2.5 A
C	1.1…5.5 A
D	3.2…16 A

h

Option 1	
3	Hand/Off/Auto Selector Keypad
3FR	Hand/Off/Auto Selector Keypad with Forward/Reverse

i

Option 2	
SM	Safety Monitor

g

Control and 3-Phase Power Connections/Motor Cable Connection (CR: Conduit/Round Media) or (RR: Round/Round Media)				
Code		Description		
		Control Power	3-Phase Power	Motor Cable
CR	blank	Conduit Entrance	Conduit Entrance	3 m, unshielded cordset male 90°
CR	W ∗	Conduit Entrance	Conduit Entrance	No cable
RR	blank	Round Media (Male Receptacle)	Round Media (Male Receptacle)	3 m, unshielded cordset male 90°
RR	W ∗	Round Media (Male Receptacle)	Round Media (Male Receptacle)	No cable

∗ See Accessories on page 6 for extended motor cable lengths.

Product Selection

Full-voltage starters — IP67/NEMA Type 4 with conduit entrance and DeviceNet communications, Up to 575V AC

Current Rating [A]	kW		Hp				24V DC Control Voltage	120V AC Control Voltage	240V AC Control Voltage
	230V AC 50 Hz	400V AC 50 Hz	200V AC 60 Hz	230V AC 60 Hz	460V AC 60 Hz	575V AC 60 Hz	Cat. No.	Cat. No.	Cat. No.
0.24…1.2	0.18	0.37	—	—	0.5	0.5	280D-F12Z-10A-CR	280D-F12D-10A-CR	280D-F12B-10A-CR
0.5…2.5	0.37	0.75	0.5	0.5	1	1.5	280D-F12Z-10B-CR	280D-F12D-10B-CR	280D-F12B-10B-CR
1.1…5.5	1.1	2.2	1	1	3	3	280D-F12Z-10C-CR	280D-F12D-10C-CR	280D-F12B-10C-CR
3.2…16	4	7.5	3	5	10	10	280D-F23Z-25D-CR	280D-F23D-25D-CR	280D-F23B-25D-CR

Full-voltage Starters — IP67/NEMA Type 4 with conduit entrance and ArmorPoint communications, Up to 575V AC

Current Rating [A]	kW		Hp				24V DC Control Voltage	120V AC Control Voltage	240V AC Control Voltage
	230V AC 50 Hz	400V AC 50 Hz	200V AC 60 Hz	230V AC 60 Hz	460V AC 60 Hz	575V AC 60 Hz	Cat. No.	Cat. No.	Cat. No.
0.24…1.2	0.18	0.37	—	—	0.5	0.5	280A-F12Z-10A-CR	280A-F12D-10A-CR	280A-F12B-10A-CR
0.5…2.5	0.37	0.75	0.5	0.5	1	1.5	280A-F12Z-10B-CR	280A-F12D-10B-CR	280A-F12B-10B-CR
1.1…5.5	1.1	2.2	1	1	3	3	280A-F12Z-10C-CR	280A-F12D-10C-CR	280A-F12B-10C-CR
3.2…16	4	7.5	3	5	10	10	280A-F23Z-25D-CR	280A-F23D-25D-CR	280A-F23B-25D-CR

Full-voltage starters — IP67/NEMA Type 4 with quick disconnects for ArmorConnect power media and DeviceNet communications, Up to 575V AC

	kW		Hp				24V DC Control Voltage	120V AC Control Voltage	240V AC Control Voltage
Current Rating [A]	230V AC 50 Hz	400V AC 50 Hz	200V AC 60 Hz	230V AC 60 Hz	460V AC 60 Hz	575V AC 60 Hz	Cat. No.	Cat. No.	Cat. No.
0.24…1.2	0.18	0.37	—	—	0.5	0.5	280D-F12Z-10A-RR	280D-F12D-10A-RR	280D-F12B-10A-RR
0.5…2.5	0.37	0.75	0.5	0.5	1	1.5	280D-F12Z-10B-RR	280D-F12D-10B-RR	280D-F12B-10B-RR
1.1…5.5	1.1	2.2	1	1	3	3	280D-F12Z-10C-RR	280D-F12D-10C-RR	280D-F12B-10C-RR
3.2…16	4	7.5	3	5	10	10	280D-F23Z-25D-RR	280D-F23D-25D-RR	280D-F23B-25D-RR

Full-voltage starters — IP67/NEMA Type 4 with quick disconnects for ArmorConnect power media and ArmorPoint communications, Up to 575V AC

	kW		Hp				24V DC Control Voltage	120V AC Control Voltage	240V AC Control Voltage
Current Rating [A]	230V AC 50 Hz	400V AC 50 Hz	200V AC 60 Hz	230V AC 60 Hz	460V AC 60 Hz	575V AC 60 Hz	Cat. No.	Cat. No.	Cat. No.
0.24…1.2	0.18	0.37	—	—	0.5	0.5	280A-F12Z-10A-RR	280A-F12D-10A-RR	280A-F12B-10A-RR
0.5…2.5	0.37	0.75	0.5	0.5	1	1.5	280A-F12Z-10B-RR	280A-F12D-10B-RR	280A-F12B-10B-RR
1.1…5.5	1.1	2.2	1	1	3	3	280A-F12Z-10C-RR	280A-F12D-10C-RR	280A-F12B-10C-RR
3.2…16	4	7.5	3	5	10	10	280A-F23Z-25D-RR	280A-F23D-25D-RR	280A-F23B-25D-RR

Full-voltage starters — NEMA Type 4X with conduit entrance and DeviceNet communications, Up to 575V AC

	kW		Hp				24V DC Control Voltage	120V AC Control Voltage	240V AC Control Voltage
Current Rating [A]	230V AC 50 Hz	400V AC 50 Hz	200V AC 60 Hz	230V AC 60 Hz	460V AC 60 Hz	575V AC 60 Hz	Cat. No.	Cat. No.	Cat. No.
0.24…1.2	0.18	0.37	—	—	0.5	0.5	280D-S12Z-10A-CR	280D-S12D-10A-CR	280D-S12B-10A-CR
0.5…2.5	0.37	0.75	0.5	0.5	1	1.5	280D-S12Z-10B-CR	280D-S12D-10B-CR	280D-S12B-10B-CR
1.1…5.5	1.1	2.2	1	1	3	3	280D-S12Z-10C-CR	280D-S12D-10C-CR	280D-S12B-10C-CR
3.2…16	4	7.5	3	5	10	10	280D-S23Z-25D-CR	280D-S23D-25D-CR	280D-S23B-25D-CR

Full-voltage starters — NEMA Type 4X with quick disconnects for ArmorConnect power media and DeviceNet communications, Up to 575V AC

	kW		Hp				24V DC Control Voltage	120V AC Control Voltage	240V AC Control Voltage
Current Rating [A]	230V AC 50 Hz	400V AC 50 Hz	200V AC 60 Hz	230V AC 60 Hz	460V AC 60 Hz	575V AC 60 Hz	Cat. No.	Cat. No.	Cat. No.
0.24…1.2	0.18	0.37	—	—	0.5	0.5	280D-S12Z-10A-RR	280D-S12D-10A-RR	280D-S12B-10A-RR
0.5…2.5	0.37	0.75	0.5	0.5	1	1.5	280D-S12Z-10B-RR	280D-S12D-10B-RR	280D-S12B-10B-RR
1.1…5.5	1.1	2.2	1	1	3	3	280D-S12Z-10C-RR	280D-S12D-10C-RR	280D-S12B-10C-RR
3.2…16	4	7.5	3	5	10	10	280D-S23Z-25D-RR	280D-S23D-25D-RR	280D-S23B-25D-RR

Reversing starters — IP67/NEMA Type 4 with conduit entrance and DeviceNet communications, Up to 575V AC

	kW		Hp				24V DC Control Voltage	120V AC Control Voltage	240V AC Control Voltage
Current Rating [A]	230V AC 50 Hz	400V AC 50 Hz	200V AC 60 Hz	230V AC 60 Hz	460V AC 60 Hz	575V AC 60 Hz	Cat. No.	Cat. No.	Cat. No.
0.24…1.2	0.18	0.37	—	—	0.5	0.5	281D-F12Z-10A-CR	281D-F12D-10A-CR	281D-F12B-10A-CR
0.5…2.5	0.37	0.75	0.5	0.5	1	1.5	281D-F12Z-10B-CR	281D-F12D-10B-CR	281D-F12B-10B-CR
1.1…5.5	1.1	2.2	1	1	3	3	281D-F12Z-10C-CR	281D-F12D-10C-CR	281D-F12B-10C-CR
3.2…16	4	7.5	3	5	10	10	281D-F23Z-25D-CR	281D-F23D-25D-CR	281D-F23B-25D-CR

Reversing starters — IP67/NEMA Type 4 with conduit entrance and ArmorPoint communications, Up to 575V AC

	kW		Hp				24V DC Control Voltage	120V AC Control Voltage	240V AC Control Voltage
Current Rating [A]	230V AC 50 Hz	400V AC 50 Hz	200V AC 60 Hz	230V AC 60 Hz	460V AC 60 Hz	575V AC 60 Hz	Cat. No.	Cat. No.	Cat. No.
0.24…1.2	0.18	0.37	—	—	0.5	0.5	281A-F12Z-10A-CR	281A-F12D-10A-CR	281A-F12B-10A-CR
0.5…2.5	0.37	0.75	0.5	0.5	1	1.5	281A-F12Z-10B-CR	281A-F12D-10B-CR	281A-F12B-10B-CR
1.1…5.5	1.1	2.2	1	1	3	3	281A-F12Z-10C-CR	281A-F12D-10C-CR	281A-F12B-10C-CR
3.2…16	4	7.5	3	5	10	10	281A-F23Z-25D-CR	281A-F23D-25D-CR	281A-F23B-25D-CR

Reversing starters — IP67/NEMA Type 4 with quick disconnects for ArmorConnect power media and DeviceNet communications, Up to 575V AC

	kW		Hp				24V DC Control Voltage	120V AC Control Voltage	240V AC Control Voltage
Current Rating [A]	230V AC 50 Hz	400V AC 50 Hz	200V AC 60 Hz	230V AC 60 Hz	460V AC 60 Hz	575V AC 60 Hz	Cat. No.	Cat. No.	Cat. No.
0.24…1.2	0.18	0.37	—	—	0.5	0.5	281D-F12Z-10A-RR	281D-F12D-10A-RR	281D-F12B-10A-RR
0.5…2.5	0.37	0.75	0.5	0.5	1	1.5	281D-F12Z-10B-RR	281D-F12D-10B-RR	281D-F12B-10B-RR
1.1…5.5	1.1	2.2	1	1	3	3	281D-F12Z-10C-RR	281D-F12D-10C-RR	281D-F12B-10C-RR
3.2…16	4	7.5	3	5	10	10	281D-F23Z-25D-RR	281D-F23D-25D-RR	281D-F23B-25D-RR

Reversing starters — IP67/NEMA Type 4 with quick disconnects for ArmorConnect power media and ArmorPoint communications, Up to 575V AC

	kW		Hp				24V DC Control Voltage	120V AC Control Voltage	240V AC Control Voltage
Current Rating [A]	230V AC 50 Hz	400V AC 50 Hz	200V AC 60 Hz	230V AC 60 Hz	460V AC 60 Hz	575V AC 60 Hz	Cat. No.	Cat. No.	Cat. No.
0.24…1.2	0.18	0.37	—	—	0.5	0.5	281A-F12Z-10A-RR	281A-F12D-10A-RR	281A-F12B-10A-RR
0.5…2.5	0.37	0.75	0.5	0.5	1	1.5	281A-F12Z-10B-RR	281A-F12D-10B-RR	281A-F12B-10B-RR
1.1…5.5	1.1	2.2	1	1	3	3	281A-F12Z-10C-RR	281A-F12D-10C-RR	281A-F12B-10C-RR
3.2…16	4	7.5	3	5	10	10	281A-F23Z-25D-RR	281A-F23D-25D-RR	281A-F23B-25D-RR

Reversing starters — NEMA Type 4X with conduit entrance and DeviceNet communications, Up to 575V AC

	kW		Hp				24V DC Control Voltage	120V AC Control Voltage	240V AC Control Voltage
Current Rating [A]	230V AC 50 Hz	400V AC 50 Hz	200V AC 60 Hz	230V AC 60 Hz	460V AC 60 Hz	575V AC 60 Hz	Cat. No.	Cat. No.	Cat. No.
0.24…1.2	0.18	0.37	—	—	0.5	0.5	281D-S12Z-10A-CR	281D-S12D-10A-CR	281D-S12B-10A-CR
0.5…2.5	0.37	0.75	0.5	0.5	1	1.5	281D-S12Z-10B-CR	281D-S12D-10B-CR	281D-S12B-10B-CR
1.1…5.5	1.1	2.2	1	1	3	3	281D-S12Z-10C-CR	281D-S12D-10C-CR	281D-S12B-10C-CR
3.2…16	4	7.5	3	5	10	10	281D-S23Z-25D-CR	281D-S23D-25D-CR	281D-S23B-25D-CR

Reversing starters — NEMA Type 4X with quick disconnects for ArmorConnect power media and DeviceNet communications, Up to 575V AC

	kW		Hp				24V DC Control Voltage	120V AC Control Voltage	240V AC Control Voltage
Current Rating [A]	230V AC 50 Hz	400V AC 50 Hz	200V AC 60 Hz	230V AC 60 Hz	460V AC 60 Hz	575V AC 60 Hz	Cat. No.	Cat. No.	Cat. No.
0.24…1.2	0.18	0.37	—	—	0.5	0.5	281D-S12Z-10A-RR	281D-S12D-10A-RR	281D-S12B-10A-RR
0.5…2.5	0.37	0.75	0.5	0.5	1	1.5	281D-S12Z-10B-RR	281D-S12D-10B-RR	281D-S12B-10B-RR
1.1…5.5	1.1	2.2	1	1	3	3	281D-S12Z-10C-RR	281D-S12D-10C-RR	281D-S12B-10C-RR
3.2…16	4	7.5	3	5	10	10	281D-S23Z-25D-RR	281D-S23D-25D-RR	281D-S23B-25D-RR

Options – Factory Installed

	Description			Cat. No. Modification
	Hand/Off/Auto Selector Keypad			-3
	Hand/Off/Auto Selector Keypad with Forward/Reverse Function			-3FR
	Safety Monitor			-SM
	Supplied without motor cable		**Enclosure Rating**	-CRW
			IP67	
			NEMA Type 4X	
	Connectivity to ArmorConnect Power Media supplied without motor cable	**Short Circuit Protection Rating**	**Enclosure Rating**	-RRW
		10 A	IP67	
			NEMA Type 4X	
		25 A	IP67	
			NEMA Type 4X	

Accessories

Sealing Caps

Description	For Use With	Cat. No.
Plastic Sealing Cap (M12)∗	Input I/O Connection	1485A-M12
AC Micro Aluminum Sealing Cap - External∗	Output I/O Connection	889A-RMCAP
Stainless Steel Sealing Cap (M12)❄	Input I/O Connection	1485AS-C3
Stainless Steel Sealing Cap (M12)❄	Output I/O Connection	889AS-RMCAP

∗ To achieve IP67 rating, sealing caps must be installed on all unused I/O connections.
❄ To achieve IP69K/NEMA 4X rating, sealing caps must be installed on all unused I/O connections.

Cables

Description	Cable Rating	Length m (ft)	Cat. No.
Extended Motor Cable Cordsets			
90° M22 Motor Cordset	IP67/NEMA Type 4	6 (19.6)	280-MTR22-M6
		14 (45.9)	280-MTR22-M14
90° M35 Motor Cordset	IP67/NEMA Type 4	6 (19.6)	280-MTR35-M6
		14 (45.9)	280-MTR35-M14
90° M22 Motor Cordset	IP69K	6 (19.6)	280S-MTR22-M6
		14 (45.9)	280S-MTR22-M14
90° M35 Motor Cordset	IP69K	6 (19.6)	280S-MTR35-M6
		14 (45.9)	280S-MTR35-M14
Motor Cable Patchcords			
90° Male/Straight Female M22	IP67/NEMA Type 4	1 (3.3)	280-MTR22-M1D
		3 (9.8)	280-MTR22-M3D
90° Male/Straight Female M35	IP67/NEMA Type 4	1 (3.3)	280-MTR35-M1D
		3 (9.8)	280-MTR35-M3D
90° Male/Straight Female M22	IP69K	1 (3.3)	280S-MTR22-M1D
		3 (9.8)	280S-MTR22-M3D
90° Male/Straight Female M35	IP69K	1 (3.3)	280S-MTR35-M1D
		3 (9.8)	280S-MTR35-M3D

ArmorPoint® Media §

Description	Length m (ft)	Cat. No.
ArmorPoint Bus Extension Cable including Terminating Resistor	1 (3.3)	280A-EXT1
Extension Cable to connect two ArmorStart Distributed Motor Controllers to ArmorPoint communication protocol	1 (3.3)	280A-EXTCABLE

§ ArmorPoint media is only available with an IP67/NEMA Type 4 rating.

DeviceNet Media ♣

Description		Length m (ft)	Cat. No.
			Sealed
	KwikLink pigtail drops are Insulation Displacement Connector (IDC) with integral Class 1 round cables for interfacing devices or power supplies to flat cable.	1 (3.3)	1485P-P1E4-B1-N5
		2 (6.5)	1485P-P1E4-B2-N5
		3 (9.8)	1485P-P1E4-B3-N5
		6 (19.8)	1485P-P1E4-B6-N5
	DeviceNet Mini- T-Port Tap	Left Keyway	1485P-P1N5-MN5KM
		Right Keyway	1485P-P1N5-MN5NF

Description		Connector	Cat. No.
	Grey PVC Thin Cable	Mini Straight Female Mini Straight Male	1485G-P❄N5-M5
		Mini Straight Female Mini Right Angle Male	1485G-P❄W5-N5
		Mini Right Angle Female Mini Straight Male	1485G-P❄M5-Z5
		Mini Right Angle Female Mini Straight Male	1485G-P❄W5-Z5
	Thick Cable	Mini Straight Female Mini Straight Male	1485C-P‡N5-M5
		Mini Straight Female Mini Right Angle Male	1485C-P‡W5-N5
		Mini Right Angle Female Mini Straight Male	1485C-P‡M5-Z5
		Mini Right Angle Female Mini Straight Male	1485C-P‡W5-Z5

Description		Length m (ft)	Cat. No.
	DeviceNet Configuration Terminal Used to interface with objects on a DeviceNet network, includes 1 m communications cable	1 m (3.3)	193-DNCT
	Communication cable, color-coded bare leads	1 m (3.3)	193-CB1
	Communication cable, microconnector (male)	1 m (3.3)	193-CM1
	Panel Mount Adapter/Door Mount Bezel Kit	—	193-DNCT-BZ1

♣ See publication M116-CA001_-EN-P for complete cable selection information.
❄ Replace symbol with desired length in meters (Example: **1485G-P1N5-M5** for a 1 m cable). Standard cable lengths: 1, 2, 3, 4, 5, and 6 m.
‡ Replace symbol with desired length in meters (Example: **1485C-P1N5-M5** for a 1 m cable). Standard cable lengths: 1, 2, 3, 4, 5, 6, 8, 10, 12, 18, 24, and 30 m.

Sensor Media ⌘

Description		ArmorStart I/O Connection	Pin Count	Connector	Cat. No.
	DC Micro Patchcord	Input	5-pin	Straight Female Straight Male	889D-F4ACDM-➢
				Straight Female Right Angle Male	889D-F4ACDE-➢
	DC Micro V-Cable	Input	5-pin	Straight Female	879D-F4ACDM-➢
				Right Angle Male	879D-R4ACM-➢
	AC Micro Patchcord	Output	3-pin	Straight Female Straight Male	889R-F3AERM-➢
				Straight Female Right Angle Male	889R-F3AERE-➢

⌘ See publication M116-CA001A-EN-P for complete cable selection information.
➢ Replace symbol with desired length in meters (Example: **889D-F4ACDM-1** for a 1 m cable). Standard cable lengths: 1, 2, 5, and 10 m.
NOTE: Stainless steel versions may be ordered by adding an **S** to the cat. no. (Example: **889DS-F4ACDM-1**)

Peer-to-Peer Communications

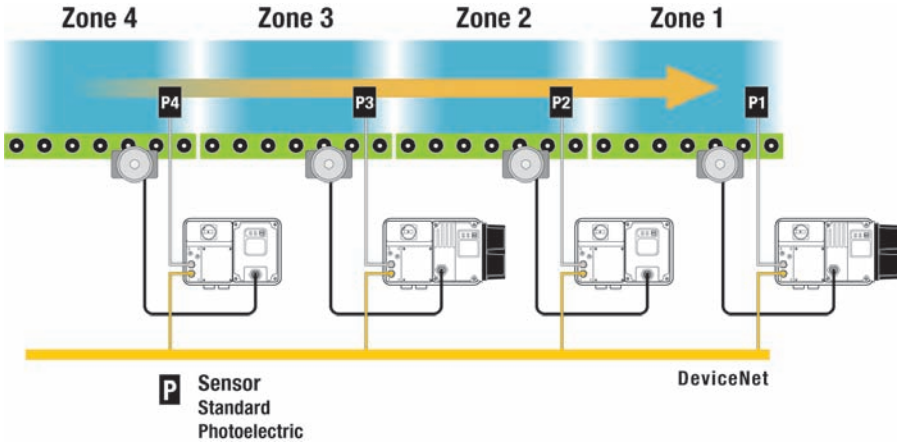

The Zone Control capabilities of ArmorStart Distributed Motor Controller is ideal for large horsepower (0.5…10 Hp) motored conveyors. The ArmorStart Distributed Motor Controllers have built-in DeviceNet Communications, DeviceLogix technology, and the added Zone Interlocking Parameters (ZIP) which allows one ArmorStart to consume data directly from up to four other DeviceNet nodes without going through the network scanner. These direct communications between conveyor zones are beneficial in a merge, diverter, and accumulation conveyor applications.

ArmorStart to ArmorPoint Connectivity - (Networks other than DeviceNet)

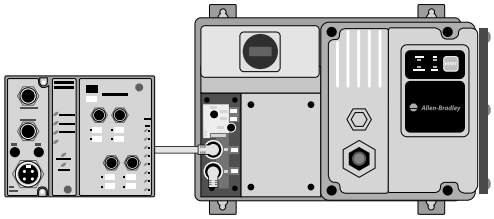

When connecting to the Bulletin 1738 ArmorPoint Distributed I/O product, a network adapter and at least one ArmorPoint Digital Output, Digital Input, Analog, AC and Relay product, or Specialty product must be selected. The ArmorPoint Distributed I/O can accomodate up to 63 modules per network node. The cable that connects the ArmorPoint Distributed I/O product to the ArmorStart Distributed Motor Controller is the Bulletin 280A-EXT1. The 280A-EXT1 includes an ArmorPoint bus extension cable and a network terminating resistor.

Note: Access to DeviceLogix programming is available with RSNetworx for DeviceNet.

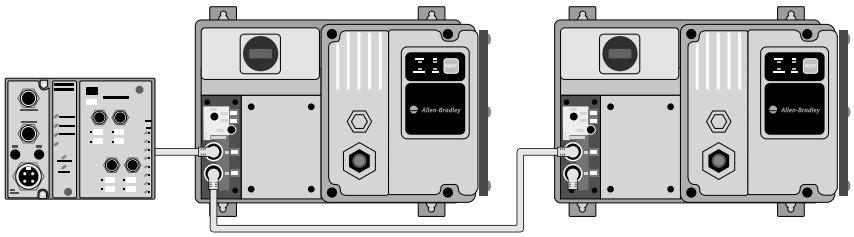

If an additional ArmorStart Distributed Motor Controller is to be connected, the Bulletin 280A-EXTCABLE will be required. A maximum of two ArmorStart Distributed Motor Controllers can be connected to the Bulletin 1738 Distributed I/O.

I/O Expansion with DeviceNet

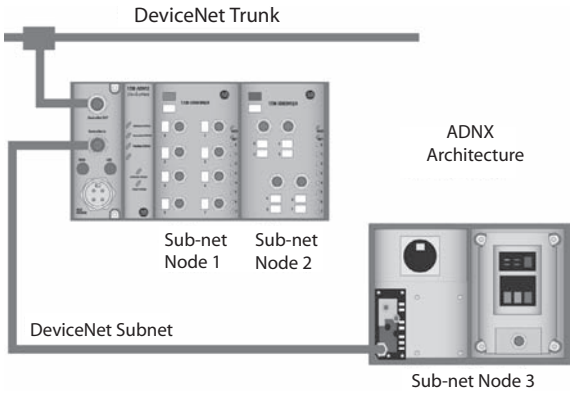

If the I/O capability of the Bulletin 280/281D ArmorStart Distributed Motor Controller needs to be expanded beyond the standard four inputs and two outputs, the ArmorStart Distributed Motor Controller with the DeviceNet communication protocol can be configured to the ADNX Architecture, in which the ArmorStart is part of the DeviceNet subnet, using the Bulletin 1738-ADNX ArmorPoint Distributed I/O product.

Bulletin 1738 ArmorPoint Distributed I/O Products

Digital Output Products

Description	Cat. No.
24V DC, eight source output with eight M12 connectors	1738-OB8EM12
24V DC, eight source output with eight M8 connectors	1738-OB8EM8
24V DC, four source output with four M12 connectors	1738-OB4EM12
24V DC, four source output with four M8 connectors	1738-OB4EM8
24V DC, two source output with two M12 connectors	1738-OB2EM12
24V DC, two source output, 2 A prot. with two M12 connectors	1738-OB2EPM12
24V DC, four sink output with four M12 connectors	1738-OV4EM12

Digital Input Products

Description	Cat. No.
24V DC, eight sink input with four M12 connectors, two points per connector	1738-IB8M12
24V DC, eight sink input with eight M8 connectors	1738-IB8M8
24V DC, eight sink input with one M23 connector	1738-IB8M23
24V DC, four sink input with four M12 connectors	1738-IB4M12
24V DC, four sink input with four M8 connectors	1738-IB4M8
24V DC, two sink input with two M12 connectors	1738-IB2M12
24V DC, four source input with four M12 connectors	1738-IV4M12

Analog Products

Description	Cat. No.
24V DC analog current input with two M12 connectors	1738-IE2CM12
24V DC analog voltage input with two M12 connectors	1738-IE2VM12
24V DC analog current output with two M12 connectors	1738-OE2CM12
24V DC analog voltage output with two M12 connectors	1738-OE2VM12
24V DC, two thermocouple input	1738-IT2IM12
24V DC, two RTD input	1738-IR2M12

Power Supply Products

Description	Cat. No.
ArmorPoint I/O Field Potential Distributor Module	1738-FPD
24V DC Expansion Power Supply	1738-EP24DC

AC and Relay Products

Description	Cat. No.
24V DC Coil, N.O. DPST relay with two M12 connectors	1738-OW4M12
24V DC Coil, N.O. DPST relay with two AC M12 connectors	1738-OW4M12AC
120V AC, two input with two AC 4-pin M12 connectors	1738-IA2M12AC4
120V AC, two input with two AC 3-pin M12 connectors	1738-IA2M12AC3
120/230V AC, two output with two AC 3-pin M12 connectors	1738-OA2M12AC3

Specialty Products

Description	Cat. No.
ArmorPoint I/O RS-232 ASCII Serial Interface Module	1738-232ASCM12
ArmorPoint I/O RS-485 ASCII Serial Interface Module	1738-485ASCM12
24V DC Very High Speed Counter Module	1738-VHSC24M23
ArmorPoint 5V Encoder/Counter Module	1738-IJM23
ArmorPoint Synchronous Serial Interface Module with Absolute Encoder	1738-SSIM23

Adapter Products

Description	Cat. No.
ArmorPoint DeviceNet Adapter Module, Drop or Pass-through, with male and female M12 connectors	1738-ADN12
ArmorPoint DeviceNet Adapter Module, Drop only, with male M18 connector	1738-ADN18
ArmorPoint DeviceNet Adapter Module, Drop or Pass-through, with male and female M18 connectors	1738-ADN18P
ArmorPoint DeviceNet 24V DC Adapter Module with subnet expansion	1738-ADNX
ArmorPoint Redundant ControlNet Adapter Module	1738-ACNR
ArmorPoint Ethernet/IP 10/100 Mbps Adapter Module	1738-AENT

Electrical Ratings		UL/NEMA	IEC
Power Circuit	Rated Operation Voltage	200…575V	200…575V
	Rate Insulation Voltage	600V	600V
	Rated Impulsed Voltage	6 kV	6 kV
	Dielectric Withstand	2200V AC	2500V AC
	Operating Frequency	50/60 Hz	50/60 Hz
	Utilization Category	N/A	AC-3
	Protection Against Shock	N/A	IP2X
	Rated Operating Current Max.	1.2 A	
		2.5 A	
		5.5 A	
		16 A	
Control Circuit	Rated Operation Voltage	24V DC (+10%, -15%) A2 (should be grounded at voltage source)	
		120V AC (+10%, -15%) A2 (should be grounded at voltage source)	
		240V AC (+10%, -15%) A2 (should be grounded at voltage source)	
	Rate Insulation Voltage	250V	250V
	Rated Impulsed Voltage	—	4 kV
	Dielectric Withstand	1500V AC	2000V AC
	Overvoltage Category	—	III
	Operating Frequency	50/60 Hz	

		Current Rating	Voltage	480Y/277V	480/480V	600Y/347V	600V
Short Circuit Protection	SCPD Performance Type 1	0.24…1.2 A	Sym. Amps RMS	65 kA	65 kA	30 kA	30 kA
		0.5…2.5 A					
		1.1…5.5 A					
		3.2…16 A		30 kA	30 kA	30 kA	30 kA
	SCPD List	Size per NEC Group Motor			—		

Power Requirements							
	Units	W/O HOA			W/ HOA		
Control Voltage	Volts	24V DC	120V AC	240V AC	24V DC	120V AC	240V AC
Contactor (Pick Up)	Amps	0.71	0.583	0.292	0.71	0.583	0.292
Contactor (Hold In)	Amps	0.063	0.075	0.038	0.063	0.075	0.038
Total Control Power (Pick Up)	VA (W)	(17 W)	70	70	(21 W)	83	84
Total Control Power (Hold In)	VA (W)	(1.50 W)	9	9	(5.58 W)	22	23
External Devices powered by Control Voltage							
Outputs (2) (1 A max. each)	Amps	2	2	2	2	2	2
Total Control (Pick Up) with max outputs	VA (W)	(65 W)	310	550	(73 W)	336	579
Total Control (Hold In) with max outputs	VA (W)	(50 W)	249	489	(58 W)	275	518

Input Ratings	Rated Operation Voltage	24V DC	
	Input On-State Voltage Range	10…26V DC	
	Input On-State Current	3.0 mA @ 10V DC	
		7.2 mA @ 24V DC	
	Input Off-State Voltage Range	0…5V DC	
	Input Off-State Current	<1.5 mA	
	Input Filter — Software Selectable		
	Off to On	Settable from 0…64 ms in 1 ms increments	
	On to Off	Settable from 0…64 ms in 1 ms increments	
	Input Compatibility	N/A	IEC 1+
	Number of Inputs	4	
	Sensor Source		
	Voltage Status Only	11…25V DC from DeviceNet	
	Current Available	50 mA max. per input, 200 mA total	
Output Ratings (Sourced from Control Circuit)	Rated Operation Voltage	240V AC/30V DC	240V AC/30V DC
	Rate Insulation Voltage	250V	250V
	Dielectric Withstand	1500V AC	2000V AC
	Operating Frequency	50/60 Hz	50/60 Hz
	Type of Control Circuit	Electromechanical relay	
	Type of Current	AC/DC	
	Conventional Thermal Current Ith	Total of both outputs ≤ 2 A	
	Type of Contacts	Normally open (N.O.)	
	Number of Contacts	2	
ArmorPoint Ratings	Backplane Current Load	400 mA	

		UL/NEMA	IEC
Environmental	Operating Temperature Range	-20…+40 °C (-4…+104 °F)	
	Storage and Transportation Temperature Range	–25….+85 °C (–13…+185 °F)	
	Altitude	2000 m	
	Humidity	5…95% (non-condensing)	
	Pollution Degree	3	
	Enclosure Ratings	NEMA 4/12/13	IP67
		NEMA 4X	IP69K
	Approximate Shipping Weight	6.8 kg (15 lb)	
Mechanical	**Resistance to Shock**		
	Operational	15 G	
	Non-Operational	30 G	
	Resistance to Vibration		
	Operational	1 G, 0.15 mm (0.006 in.) displacement	
	Non-Operational	2.5 G, 0.38 mm (0.015 in.) displacement	
	Power and Ground Terminals		
	Wire Size	Primary/Secondary terminal: (#16 …#10 AWG)	Primary/Secondary terminal: 1.5…4.0 mm²
	Tightening Torque	Primary terminal: 10.8 lb•in Secondary terminal: 4.5 lb•in	Primary Terminal: (1.2 N•m) Secondary terminal: (0.5 N•m)
	Wire Strip Length	0.35 in. (9 mm)	
	Control and Safety Monitor Inputs		
	Wire Size	(18…10 AWG)	1.0…4.0 mm²
	Tightening Torque	6.2 lb•in	0.7 N•m
	Wire Strip Length	0.35 in. (9 mm)	
Other Rating	**EMC Emission Levels**		
	Conducted Radio Frequency Emissions	Class A	
	Radiated Emissions	Class A	
	EMC Immunity Levels		
	Electrostatic Discharge	4 kV contact and 8 kV Air	
	Radio Frequency Electromagnetic Field	10V/m	
	Fast Transient	2 kV	
	Surge Transient	1 kV $_{L-L}$, 2 kV $_{L-N}$ (earth)	
	Overload Characteristics		
	Overload Current Range	0.24…1.2 A	
		0.5…2.5 A	
		1.1…5.5 A	
		3.2…16 A	
	Trip Classes	10, 15, 20	
	Trip Rating	120% of FLC setting	
	Number of poles	3	
	DeviceNet Specifications		
	DeviceNet Supply Voltage Rating	Range 11…25V DC, 24V DC nominal	
	DeviceNet Input Current	167 mA @ 24V DC - 4.0 W	
		364 mA @ 11V DC - 4.0 W	
	External Devices powered by DeviceNet	Sensors inputs 4 x 50 mA - total 200 mA	
	Total w/max Sensor Inputs (4)	367 mA @ 24V DC - 8.8 W	
	DeviceNet Input Current Surge	15 A for 250 µs	
	DeviceNet Communications		
	Baud Rates	125, 250, 500 kbps	
	Distance Maximum	500 m (1630 ft) @ 125 kbps	
		200 m (656 ft) @ 250 kbps	
		100 m (328 ft) @ 500 kbps	
	Certifications	cULus (File No. E3125) UL 508 EN/IEC 60947-4-1 CE Marked per Low Voltage Directive 73/23/EEC and EMC Directive 89/336/EEC	

External Connections for Input Connector

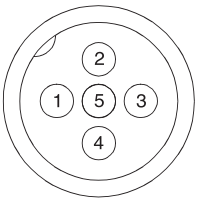

Pin 1: +V Out
Pin 2: Input
Pin 3: Comm
Pin 4: Input
Pin 5: NC (No Connection)

External Connections for Output Connector

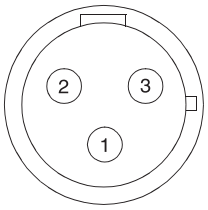

Pin 1: PE
Pin 2: Return
Pin 3: Relay Out

External Connections for Motor Connector (≤ 3 Hp @ 460V AC)

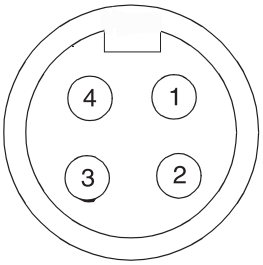

Pin 1: T1 - Black
Pin 2: T2 - White
Pin 3: T3 - Red
Pin 4: Ground - Green/Yellow

External Connections for Motor Connector (> 3 Hp @ 460V AC)

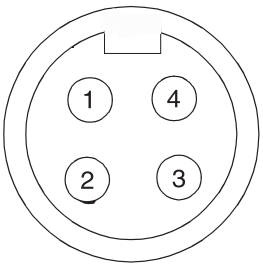

Pin 1: T1 - Black
Pin 2: Ground - Green/Yellow
Pin 3: T3 - Red
Pin 4: T2 - White

External Connections for ArmorPoint Interface (IN)

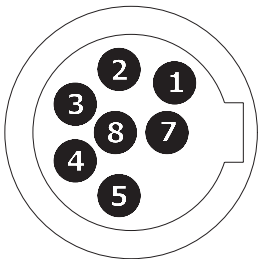

Pin 1: CAN High
Pin 2: Common
Pin 3: +5V
Pin 4: CAN Low
Pin 5: Enable In
Pin 7: Common
Pin 8: PE

External Connections for ArmorPoint Interface (OUT)

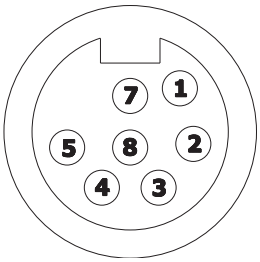

Pin 1: CAN High
Pin 2: Common
Pin 3: +5V
Pin 4: CAN Low
Pin 5: Enable Out
Pin 7: Common
Pin 8: NC (No Connection)

Overload Curves

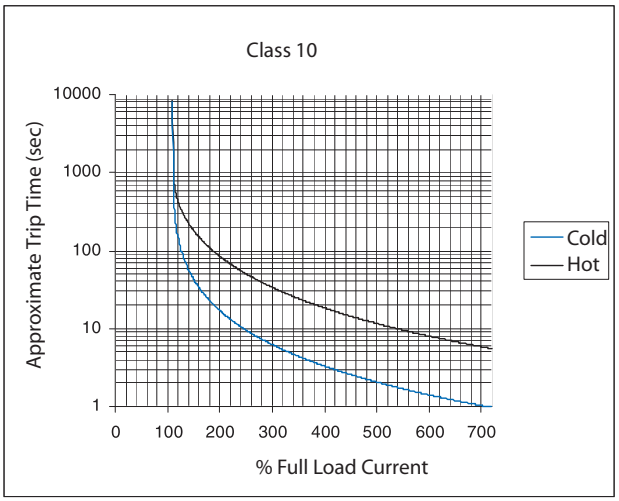

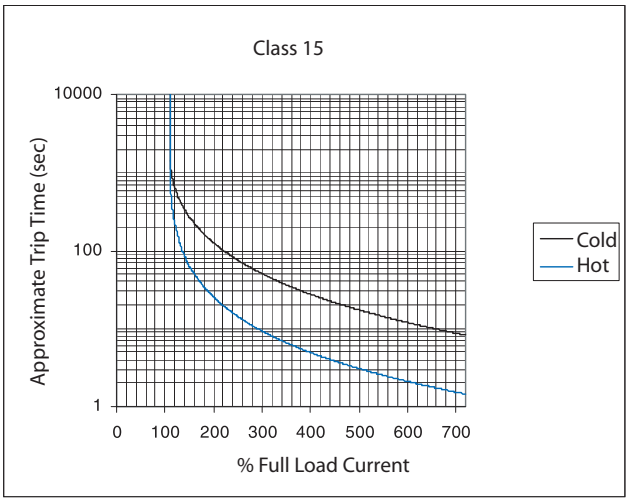

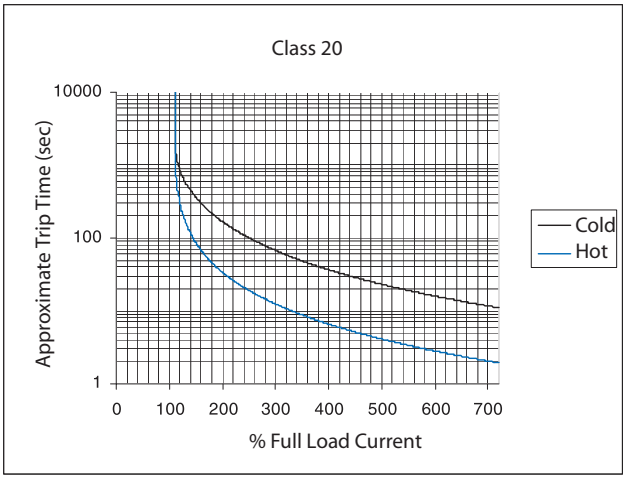

Dimensions in millimeters (inches). Dimensions are not intended to be used for manufacturing purposes. All dimensions are subject to change.

Dimensions for IP67/NEMA Type 4 with Conduit Entrance

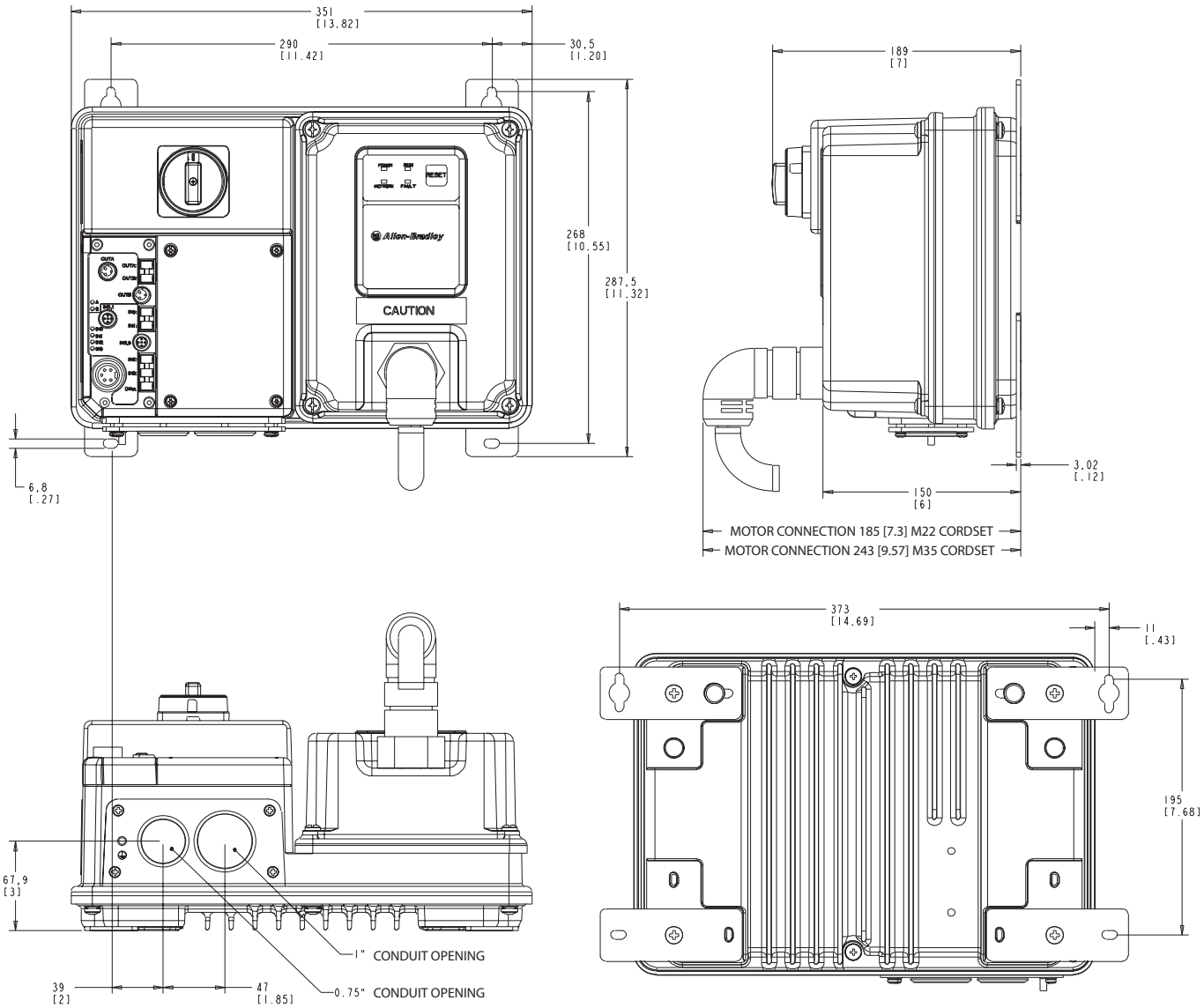

Dimensions in millimeters (inches). Dimensions are not intended to be used for manufacturing purposes. All dimensions are subject to change.

Dimensions for IP67/NEMA Type 4 with ArmorConnect Connectivity

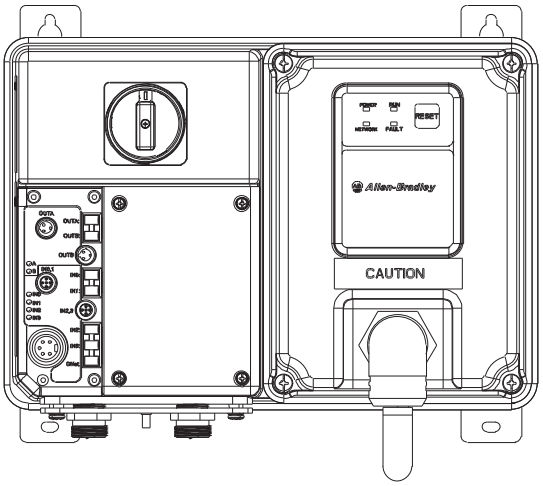

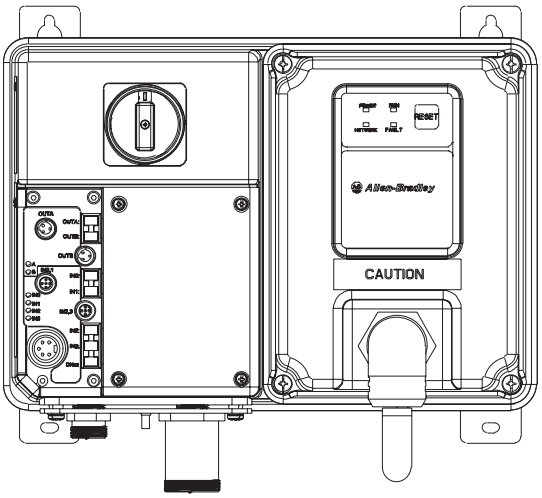

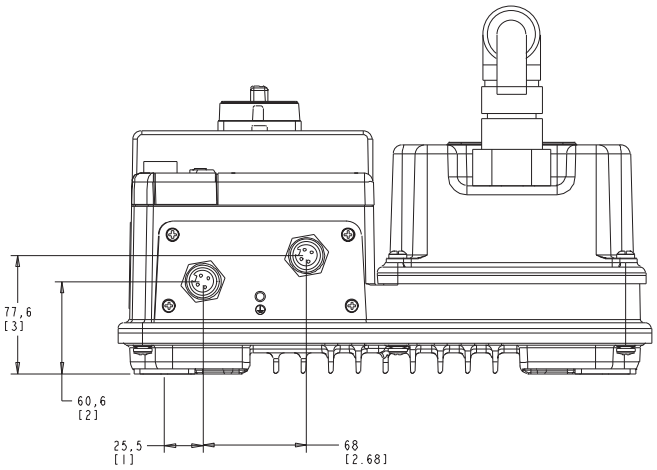

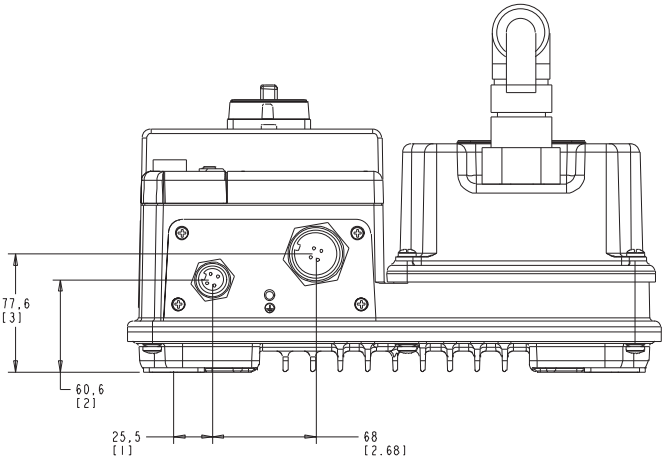

Dimensions in millimeters (inches). Dimensions are not intended to be used for manufacturing purposes. All dimensions are subject to change.

Dimensions for NEMA Type 4X with Conduit Entrance

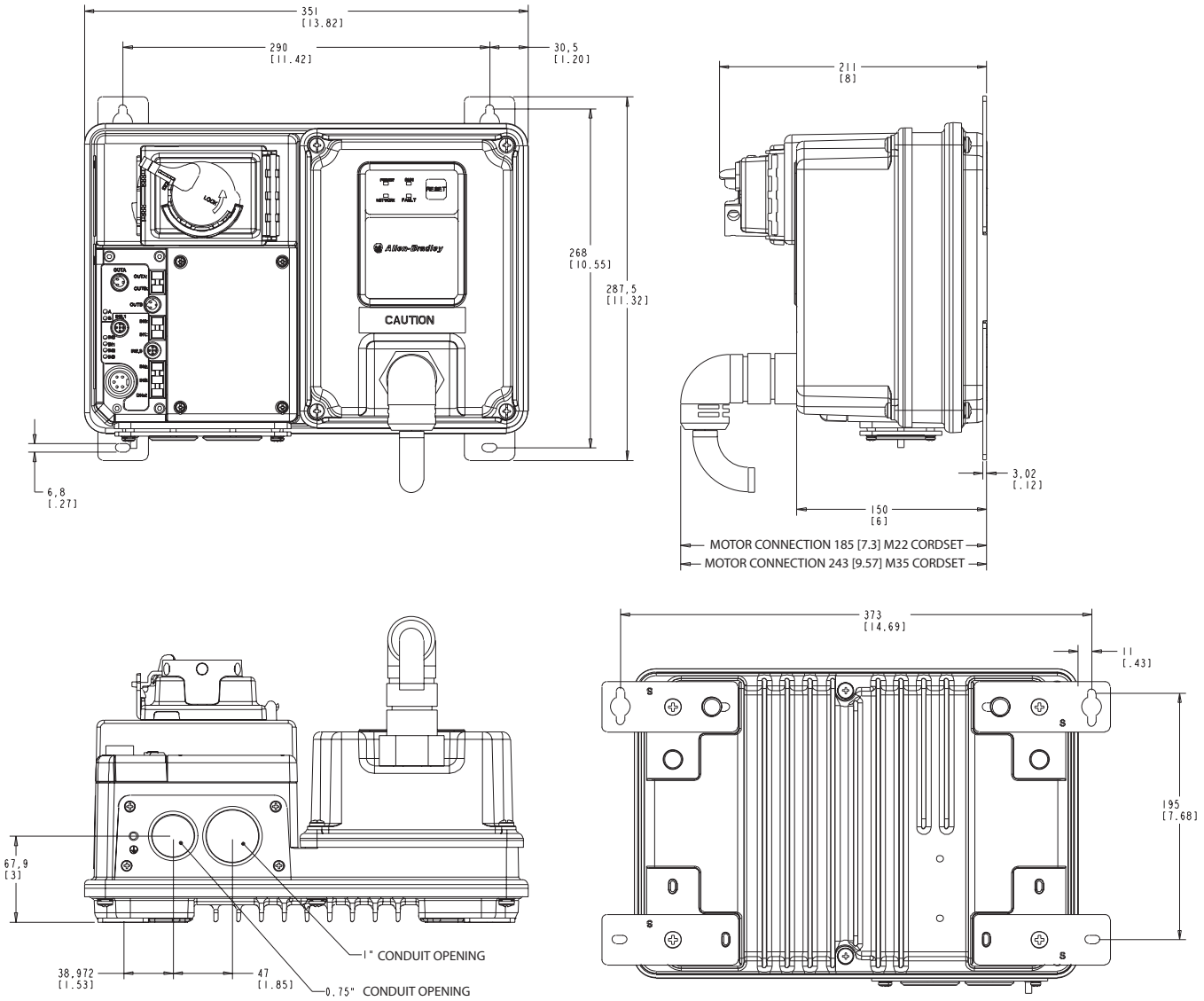

Dimensions in millimeters (inches). Dimensions are not intended to be used for manufacturing purposes. All dimensions are subject to change.

Dimensions for NEMA Type 4X with ArmorConnect Connectivity

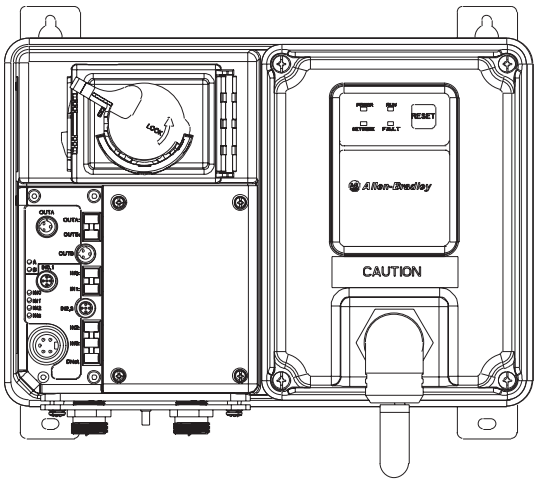

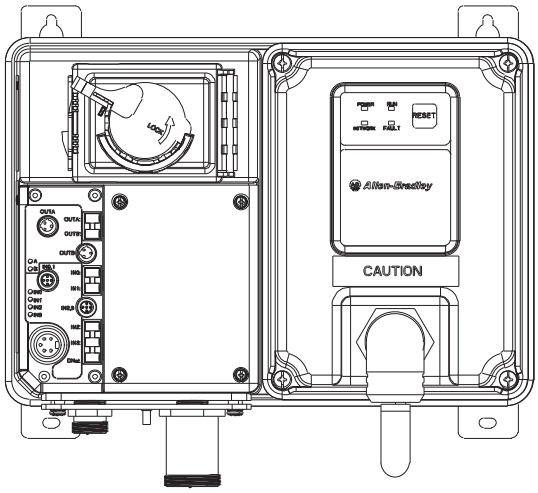

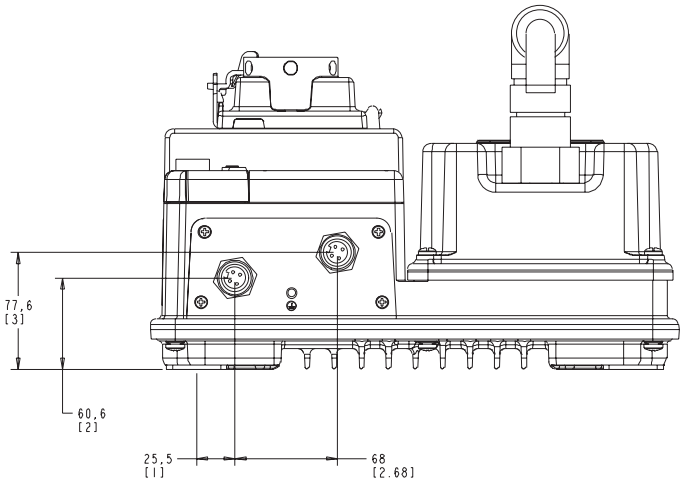

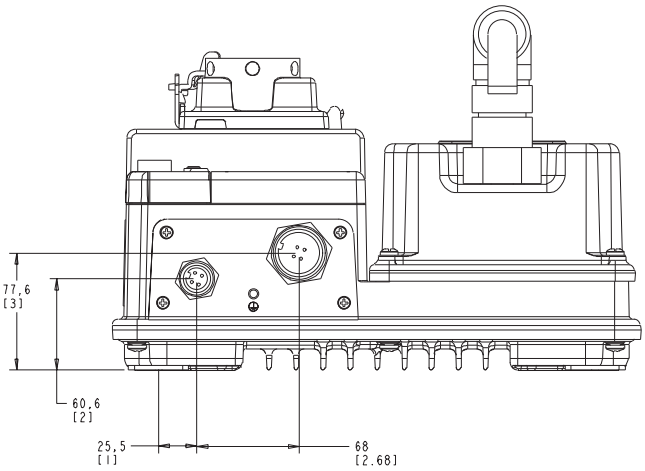

Bulletin 283 ArmorStart Distributed Motor Controller

- On-Machine starting solution
- Solid-state motor control
- Horsepower range 0.5…10 Hp (0.37…5.5 kW)
- Robust IP67/NEMA Type 4 and NEMA Type 4X enclosure rating
- Modular plug and play design
- Quick disconnect connections for I/O, communications, motor, three-phase and control power
- Gland plate entry: conduit entrance or ArmorConnect power media
- Four inputs and two outputs (expandable with ArmorPoint)
- LED status indication
- DeviceNet communications
- DeviceLogix component technology
- Connectivity to ArmorPoint distributed I/O products
- Peer-to-peer communications
- ControlNet and EtherNet communication via ArmorPoint
- Factory installed options:
  - Hand/Off/Auto (HOA) keypad configuration
  - Source brake contactor
  - Safety monitor

Table of Contents

Product Overview ..... this page
Product Selection 19
Accessories..... 22
Specifications..... 26
Approximate Dimensions..... 29

Standards Compliance

UL 508
CSA C22.2, No. 14
EN/IEC 60947-2
CE Marked per Low Voltage Directive 73/23/EEC and EMC Directive 89/336/EEC
CCC

Certifications

cULus (File No. E96956, Guides NMFT, NMFT7)

Description

The Bulletin 283 ArmorStart Distributed Motor Controller is an integrated, pre-engineered starter for solid-state motor control applications. The ArmorStart offers a robust IP67/NEMA Type 4 enclosure design, which is suitable for water wash-down environments. The ArmorStart products are also offered with NEMA Type 4X rating, suitable for environment wash down with caustic chemicals used in the food and beverage industry. The wash-down rating is 1000 psi for the NEMA Type 4X rated devices. The modular plug-and-play design offers simplicity in wiring the installation. The quick disconnects for the I/O, communications, and motor connection reduces the wiring time and eliminates wiring errors. The ArmorStart offers as standard, four DC inputs and two relay outputs to be used with sensors and actuators respectively,for monitoring and controlling the application process. The ArmorStart's LED status indication and built-in diagnostics capabilities, allows for ease of maintenance and troubleshooting. The optional Hand/Off/Auto (HOA) keypad allows for local start/stop control and Emergency Stop system configuration at the ArmorStart Distributed Motor Controller.

The Bulletin 283 ArmorStart Distributed Motor Controller offers short circuit protection per UL 508 and IEC 60947. The ArmorStart is rated for local-disconnect service by incorporating the Bulletin 140 Motor Protector as the local-disconnect, eliminating the need for additional components. The ArmorStart Distributed Motor Controllers are suitable for group motor installations.

Mode of Operation

Soft Start

This method has the most general application. The motor is raised from an initial torque value to full voltage. This initial torque is adjustable to 15, 25, 35, or 65% of locked rotor torque. The motor voltage is gradually increased during the acceleration ramp time, which can be adjusted from 1…45 s.

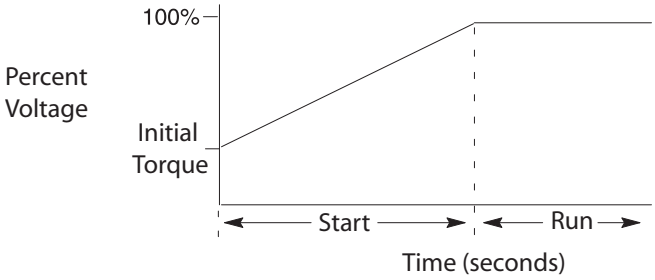

Selectable Kick Start

A kickstart, or boost, at the beginning of the start mode is intended to provide a current pulse of 450% of the full load current. The kickstart time is adjustable from 0.5…1.5 s. This allows the motor to develop additional torque at startup for loads which may need an initial boost.

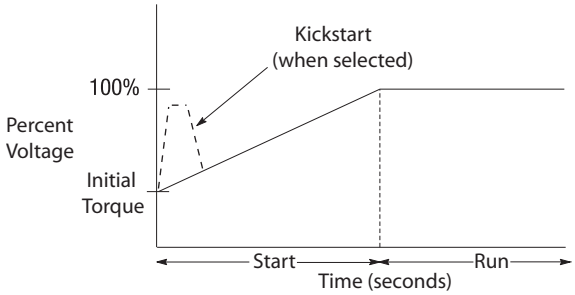

Current Limit Start

This starting mode is used when it is necessary to limit the maximum starting current. It can be adjusted for 150…600% of full load amps. Start times are selectable from 1…45 s.

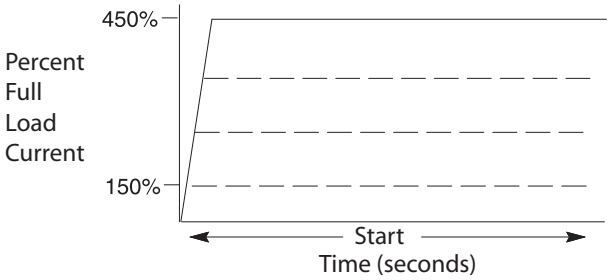

Soft Stop

The Soft Stop function can be used with applications that require an extended coast to rest. When enabled, the voltage ramp-down time can be selected from 1…90 s. The motor will stop when the motor voltage drops to a point where the load torque is greater than the motor torque.

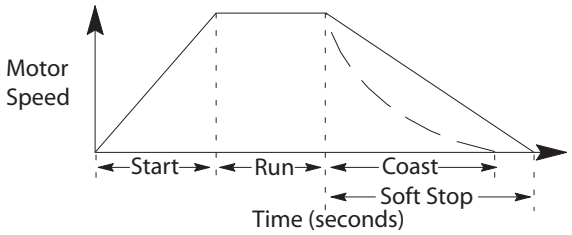

Description of Features

Overload Protection

The Bulletin 283 ArmorStart Distributed Motor Controller incorporates, as standard, electronic motor overload protection. This overload protection is accomplished electronically with an I^2t algorithm. The ArmorStart's overload protection is programmable via the communication network providing the user with flexibility. The overload trip class allows for class 10 overload protection. Ambient insensitivity is inherent in the electronic design of the overload.

LED Status Indication

The LED Status Indication provides four status LEDs and a Reset button. The LEDs provide status indication for the following:

- **POWER LED**
  The LED is illuminated solid green when control power is present and with the proper polarity
- **RUN LED**
  This LED is illuminated solid green when a start command and control power are present
- **NETWORK LED**
  This bi-color (red/green) LED indicates the status of the communication link
- **FAULT LED**
  Indicates Controller Fault (trip) condition
- The "Reset Button" as a local trip reset.

Inputs

The inputs are single-keyed (two inputs per connector), which are sourced from DeviceNet power (24V DC), with LED status indication.

Outputs

Two dual-key relay output connectors are supplied as standard. The outputs are sourced from the control voltage power, which can be either, 24V DC, 120V AC or 240V AC with LED status indication.

Gland Plate Entrance

The ArmorStart product offers two different methods for connecting incoming three-phase and control power to the device. One method offered, is the traditional conduit entrance which provides a 3/4 in. and 1 in. conduit hole opening for wiring three-phase and control power. The second method offers connectivity to the ArmorConnect power media. Factory installed receptacles are provided for connectivity to both three-phase and control power media.

Fault Diagnostics

Fault diagnostics capabilities built into the Bulletin 283 ArmorStart Distributed Motor Controller help you pinpoint a problem for easy troubleshooting and quick re-starting.

- Short Circuit
- Overload
- Phase Loss
- Shorted SCR
- Phase Rotation
- Control Power Loss
- Control Power Fuse Detection
- DeviceNet Power Loss
- Output Fuse Detection
- I/O Fault
- Brake Fuse Detection
- Overtemperature
- Phase Imbalance
- Internal Communication Fault
- Heatsink Temperature Fault
- EEPROM Fault
- Hardware Fault

Motor Cable

With every Bulletin 283 ArmorStart Distributed Motor Controller, a 3–meter unshielded 4-conductor cordset is provided with each unit as standard.

Network and Expandable I/O Capabilities

The Bulletin 283D ArmorStart Distributed Motor Controller delivers enhanced control to access parameter settings and provides fault diagnostics, and remote start/stop control. DeviceNet is the communication protocol, provided with the ArmorStart including DeviceLogix.

The Bulletin 283A ArmorStart Distributed Motor Controller allows connectivity to the ArmorPoint backplane. The ArmorPoint I/O system can communicate using DeviceNet, ControlNet, or EtherNet communication protocols. In addition to the different network protocols, the ArmorPoint Distributed I/O products allow the I/O capability to be expanded beyond the standard two outputs. The two dual-key relay output connectors are supplied as standard. The outputs are sourced from the control voltage power of 24V DC, 120V AC, or 240V AC. LED status indication is also provided, as standard with ArmorPoint. When using the ArmorPoint, a maximum of two ArmorPoint Distributed Motor Controllers can be connected to the ArmorPoint Distributed I/O product.

Factory Installed Options

HOA Selector Keypad

The HOA Selector Keypad allows for local start/stop control.

Source Brake Contactor

An internal contactor is used to switch the electromechanical motor brake on/off. The motor brake is powered from the main power circuit. A customer accessible 3.0 A fuse is provided to protect the brake cable. A 3-meter, 3-pin cable for connection to the motor brake, is provided as standard when this option is selected.

Safety Monitor

The Safety Monitor Option allows for independent monitoring of the output status of the device. The function is implemented using a normally closed contact which complies with IEC 60947-5-1 for mechanically linked contacts. Two terminal blocks are provided as the inputs which maybe used with an external safety circuit. The external safety circuit monitors the status of the isolation contactor.

Cat. No. Explanation

Examples given in this section are for reference purposes. This basic explanation should not be used for product selection; not all combinations will produce a valid catalog number.

283	D –	F	B	19Z –	25	D –	CR –	Option 1 –	Option 2 –	Option 3
a	*b*	*c*	*d*	*e*	*f*	*g*	*h*	*i*	*j*	*k*

a

Bulletin Number	
283	Solid-State Starter

b

Communications	
D	DeviceNet™
A	ArmorPoint

c

Enclosure Type	
F	Type 4 (IP67)
S	Type 4X

d

Input Line Voltage	
Code	Description
B	200…460V AC, 3-Phase, 50/60 Hz
C	200…575V AC, 3-Phase, 50/60 Hz

e

Controller Size/Control Voltage		
24V DC	120V AC	240V AC
3Z	3D	3B
9Z	9D	9B
16Z	16D	16B
19Z	19D	19B

f

Short Circuit Protection (Motor Circuit Protector)	
10	10 A Rated Device
25	25 A Rated Device

g

Overload Selection Current Range	
A	1.1…3.0 A
B	3.0…5.5 A
C	5.3…7.6 A
D	6.3…16.0 A

i

Option 1	
3	Hand/Off/Auto Selector Keypad

j

Option 2		
SB	blank	Source Brake Contactor
SB	W ∗	No cable

k

Option 3	
Code	Description
SM	Safety Monitor

h

Control and 3-Phase Power Connections/Motor Cable Connection (CR: Conduit/Round Media) or (RR: Round/Round Media)				
Code		Description		
		Control Power	3-Phase Power	Motor Cable
CR	blank	Conduit Entrance	Conduit Entrance	3 m, unshielded cordset male 90°
CR	W ∗	Conduit Entrance	Conduit Entrance	No cable
RR	blank	Round Media (Male Receptacle)	Round Media (Male Receptacle)	3 m, unshielded cordset male 90°
RR	W ∗	Round Media (Male Receptacle)	Round Media (Male Receptacle)	No cable

∗ See Accessories on page 22 for extended motor and source brake cable lengths.

Product Selection

IP67/NEMA Type 4 with conduit entrance and DeviceNet communications, Up to 480V AC

Current Rating (A)	kW		Hp			24V DC Control Voltage	120V AC Control Voltage	240V AC Control Voltage
	230V AC 50 Hz	380/ 400/ 415V AC 50 Hz	200V AC 60 Hz	230V AC 60 Hz	460V AC 60 Hz	Cat. No.	Cat. No.	Cat. No.
1.1…3.0	0.37	1.1	0.5	0.5	1.5	283D-FB3Z-10A-CR	283D-FB3D-10A-CR	283D-FB3B-10A-CR
3.0…5.5	1.5	2.2	1	1	3	283D-FB9Z-10B-CR	283D-FB9D-10B-CR	283D-FB9B-10B-CR
5.3…7.6	3	3	1.5	2	5	283D-FB16Z-10C-CR	283D-FB16D-10C-CR	283D-FB16B-10C-CR
6.3…16	4	5.5	3	5	10	283D-FB19Z-25D-CR	283D-FB19D-25D-CR	283D-FB19B-25D-CR

IP67/NEMA Type 4 with conduit entrance and ArmorPoint communications, Up to 480V AC

Current Rating (A)	kW		Hp			24V DC Control Voltage	120V AC Control Voltage	240V AC Control Voltage
	230V AC 50 Hz	380/ 400/ 415V AC 50 Hz	200V AC 60 Hz	230V AC 60 Hz	460V AC 60 Hz	Cat. No.	Cat. No.	Cat. No.
1.1…3.0	0.37	1.1	0.5	0.5	1.5	283A-FB3Z-10A-CR	283A-FB3D-10A-CR	283A-FB3B-10A-CR
3.0…5.5	1.5	2.2	1	1	3	283A-FB9Z-10B-CR	283A-FB9D-10B-CR	283A-FB9B-10B-CR
5.3…7.6	3	3	1.5	2	5	283A-FB16Z-10C-CR	283A-FB16D-10C-CR	283A-FB16B-10C-CR
6.3…16	4	5.5	3	5	10	283A-FB19Z-25D-CR	283A-FB19D-25D-CR	283A-FB19B-25D-CR

IP67/NEMA Type 4 with quick disconnects for ArmorConnect power media and DeviceNet communications, Up to 480V AC

	kW		Hp			24V DC Control Voltage	120V AC Control Voltage	240V AC Control Voltage
Current Rating (A)	230V AC 50 Hz	380/ 400/ 415V AC 50 Hz	200V AC 60 Hz	230V AC 60 Hz	460V AC 60 Hz	Cat. No.	Cat. No.	Cat. No.
1.1…3.0	0.55	1.1	0.5	0.5	1.5	283D-FB3Z-10A-RR	283D-FB3D-10A-RR	283D-FB3B-10A-RR
3.0…5.5	1.1	2.2	1	1	3	283D-FB9Z-10B-RR	283D-FB9D-10B-RR	283D-FB9B-10B-RR
5.3…7.6	1.5	3	1.5	2	5	283D-FB16Z-10C-RR	283D-FB16D-10C-RR	283D-FB16B-10C-RR
6.3…16	4	5.5	3	5	10	283D-FB19Z-25D-RR	283D-FB19D-25D-RR	283D-FB19B-25D-RR

IP67/NEMA Type 4 with quick disconnects for ArmorConnect power media and ArmorPoint communications, Up to 480V AC

	kW		Hp			24V DC Control Voltage	120V AC Control Voltage	240V AC Control Voltage
Current Rating (A)	230V AC 50 Hz	380/ 400/ 415V AC 50 Hz	200V AC 60 Hz	230V AC 60 Hz	460V AC 60 Hz	Cat. No.	Cat. No.	Cat. No.
1.1…3.0	0.55	1.1	0.5	0.5	1.5	283A-FB3Z-10A-RR	283A-FB3D-10A-RR	283A-FB3B-10A-RR
3.0…5.5	1.1	2.2	1	1	3	283A-FB9Z-10B-RR	283A-FB9D-10B-RR	283A-FB9B-10B-RR
5.3…7.6	1.5	3	1.5	2	5	283A-FB16Z-10C-RR	283A-FB16D-10C-RR	283A-FB16B-10C-RR
6.3…16	4	5.5	3	5	10	283A-FB19Z-25D-RR	283A-FB19D-25D-RR	283A-FB19B-25D-RR

NEMA Type 4X with conduit entrance and DeviceNet communications, Up to 480V AC

	kW		Hp			24V DC Control Voltage	120V AC Control Voltage	240V AC Control Voltage
Current Rating (A)	230V AC 50 Hz	380/ 400/ 415V AC 50 Hz	200V AC 60 Hz	230V AC 60 Hz	460V AC 60 Hz	Cat. No.	Cat. No.	Cat. No.
1.1…3.0	0.55	1.1	0.5	0.5	1.5	283D-SB3Z-10A-CR	283D-SB3D-10A-CR	283D-SB3B-10A-CR
3.0…5.5	1.1	2.2	1	1	3	283D-SB9Z-10B-CR	283D-SB9D-10B-CR	283D-SB9B-10B-CR
5.3…7.6	1.5	3	1.5	2	5	283D-SB16Z-10C-CR	283D-SB16D-10C-CR	283D-SB16B-10C-CR
6.3…16	4	5.5	3	5	10	283D-SB19Z-25D-CR	283D-SB19D-25D-CR	283D-SB19B-25D-CR

NEMA Type 4X with quick disconnects for ArmorConnect power media and DeviceNet communications, Up to 480V AC

	kW		Hp			24V DC Control Voltage	120V AC Control Voltage	240V AC Control Voltage
Current Rating (A)	230V AC 50 Hz	380/ 400/ 415V AC 50 Hz	200V AC 60 Hz	230V AC 60 Hz	460V AC 60 Hz	Cat. No.	Cat. No.	Cat. No.
1.1…3.0	0.55	1.1	0.5	0.5	1.5	283D-SB3Z-10A-RR	283D-SB3D-10A-RR	283D-SB3B-10A-RR
3.0…5.5	1.1	2.2	1	1	3	283D-SB9Z-10B-RR	283D-SB9D-10B-RR	283D-SB9B-10B-RR
5.3…7.6	1.5	3	1.5	2	5	283D-SB16Z-10C-RR	283D-SB16D-10C-RR	283D-SB16B-10C-RR
6.3…16	4	5.5	3	5	10	283D-SB19Z-25D-RR	283D-SB19D-25D-RR	283D-SB19B-25D-RR

IP67/NEMA Type 4 with conduit entrance and DeviceNet communications, Up to 575V AC

	kW		Hp				24V DC Control Voltage	120V AC Control Voltage	240V AC Control Voltage
Current Rating (A)	230V AC 50 Hz	400V AC 50 Hz	200V AC 60 Hz	230V AC 60 Hz	460V AC 60 Hz	575V AC 60 Hz	Cat. No.	Cat. No.	Cat. No.
1.1…3.0	0.55	1.1	0.5	0.5	1.5	2	283D-FC3Z-10A-CR	283D-FC3D-10A-CR	283D-FC3B-10A-CR
3.0…5.5	1.1	2.2	1	1	3	3	283D-FC9Z-10B-CR	283D-FC9D-10B-CR	283D-FC9B-10B-CR
5.3…7.6	1.5	3	1.5	2	5	5	283D-FC16Z-10C-CR	283D-FC16D-10C-CR	283D-FC16B-10C-CR
6.3…16	4	5.5	3	5	10	10	283D-FC19Z-25D-CR	283D-FC19D-25D-CR	283D-FC19B-25D-CR

IP67/NEMA Type 4 with conduit entrance and ArmorPoint communications, Up to 575V AC

	kW		Hp				24V DC Control Voltage	120V AC Control Voltage	240V AC Control Voltage
Current Rating (A)	230V AC 50 Hz	400V AC 50 Hz	200V AC 60 Hz	230V AC 60 Hz	460V AC 60 Hz	575V AC 60 Hz	Cat. No.	Cat. No.	Cat. No.
1.1…3.0	0.55	1.1	0.5	0.5	1.5	2	283A-FC3Z-10A-CR	283A-FC3D-10A-CR	283A-FC3B-10A-CR
3.0…5.5	1.1	2.2	1	1	3	3	283A-FC9Z-10B-CR	283A-FC9D-10B-CR	283A-FC9B-10B-CR
5.3…7.6	1.5	3	1.5	2	5	5	283A-FC16Z-10C-CR	283A-FC16B-10C-CR	283A-FC16B-10C-CR
6.3…16	4	5.5	3	5	10	10	283A-FC19Z-25D-CR	283A-FC19D-25D-CR	283A-FC19B-25D-CR

IP67/NEMA Type 4 with quick disconnects for ArmorConnect power media and DeviceNet communications, Up to 575V AC

	kW		Hp				24V DC Control Voltage	120V AC Control Voltage	240V AC Control Voltage
Current Rating (A)	230V AC 50 Hz	400V AC 50 Hz	200V AC 60 Hz	230V AC 60 Hz	460V AC 60 Hz	575V AC 60 Hz	Cat. No.	Cat. No.	Cat. No.
1.1…3.0	0.55	1.1	0.5	0.5	1.5	2	283D-FC3Z-10A-RR	283D-FC3D-10A-RR	283D-FC3B-10A-RR
3.0…5.5	1.1	2.2	1	1	3	3	283D-FC9Z-10B-RR	283D-FC9D-10B-RR	283D-FC9B-10B-RR
5.3…7.6	1.5	3	1.5	2	5	5	283D-FC16Z-10C-RR	283D-FC16D-10C-RR	283D-FC16B-10C-RR
6.3…16	4	5.5	3	5	10	10	283D-FC19Z-25D-RR	283D-FC19D-25D-RR	283D-FC19B-25D-RR

IP67/NEMA Type 4 with quick disconnects for ArmorConnect power media and ArmorPoint communications, Up to 575V AC

	kW		Hp				24V DC Control Voltage	120V AC Control Voltage	240V AC Control Voltage
Current Rating (A)	230V AC 50 Hz	400V AC 50 Hz	200V AC 60 Hz	230V AC 60 Hz	460V AC 60 Hz	575V AC 60 Hz	Cat. No.	Cat. No.	Cat. No.
1.1…3.0	0.55	1.1	0.5	0.5	1.5	2	283A-FC3Z-10A-RR	283A-FC3D-10A-RR	283A-FC3B-10A-RR
3.0…5.5	1.1	2.2	1	1	3	3	283A-FC9Z-10B-RR	283A-FC9D-10B-RR	283A-FC9B-10B-RR
5.3…7.6	1.5	3	1.5	2	5	5	283A-FC16Z-10C-RR	283A-FC16B-10C-RR	283A-FC16B-10C-RR
6.3…16	4	5.5	3	5	10	10	283A-FC19Z-25D-RR	283A-FC19D-25D-RR	283A-FC19B-25D-RR

NEMA Type 4X with conduit entrance and DeviceNet communications, Up to 575V AC

	kW		Hp				24V DC Control Voltage	120V AC Control Voltage	240V AC Control Voltage
Current Rating (A)	230V AC 50 Hz	400V AC 50 Hz	200V AC 60 Hz	230V AC 60 Hz	460V AC 60 Hz	575V AC 60 Hz	Cat. No.	Cat. No.	Cat. No.
1.1…3.0	0.55	1.1	0.5	0.5	1.5	2	283D-SC3Z-10A-CR	283D-SC3D-10A-CR	283D-SC3B-10A-CR
3.0…5.5	1.1	2.2	1	1	3	3	283D-SC9Z-10B-CR	283D-SC9D-10B-CR	283D-SC9B-10B-CR
5.3…7.6	1.5	3	1.5	2	5	5	283D-SC16Z-10C-CR	283D-SC16D-10C-CR	283D-SC16B-10C-CR
6.3…16	4	5.5	3	5	10	10	283D-SC19Z-25D-CR	283D-SC19D-25D-CR	283D-SC19B-25D-CR

NEMA Type 4X with quick disconnects for ArmorConnect power media and DeviceNet communications, Up to 575V AC

	kW		Hp				24V DC Control Voltage	120V AC Control Voltage	240V AC Control Voltage
Current Rating (A)	230V AC 50 Hz	400V AC 50 Hz	200V AC 60 Hz	230V AC 60 Hz	460V AC 60 Hz	575V AC 60 Hz	Cat. No.	Cat. No.	Cat. No.
1.1…3.0	0.55	1.1	0.5	0.5	1.5	2	283D-SC3Z-10A-RR	283D-SC3D-10A-RR	283D-SC3B-10A-RR
3.0…5.5	1.1	2.2	1	1	3	3	283D-SC9Z-10B-RR	283D-SC9D-10B-RR	283D-SC9B-10B-RR
5.3…7.6	1.5	3	1.5	2	5	5	283D-SC16Z-10C-RR	283D-SC16D-10C-RR	283D-SC16B-10C-RR
6.3…16	4	5.5	3	5	10	10	283D-SC19Z-25D-RR	283D-SC19D-25D-RR	283D-SC19B-25D-RR

Options – Factory Installed

Description				Cat. No. Modification
	Hand/Off/Auto Selector Keypad			-3
	Safety Monitor			-SM
	Supplied without motor cable		**Enclosure Rating**	-CRW
			IP67	
			NEMA Type 4X	
	Supplied with source brake cable		IP67	-SB
			NEMA Type 4X	
	Supplied without source brake cable		IP67	-SBW
			NEMA Type 4X	
	Connectivity to ArmorConnect Power Media supplied without motor cable	**Short Circuit Protection Rating**	**Enclosure Rating**	-RRW
		10 A	IP67	
			NEMA Type 4X	
		25 A	IP67	
			NEMA Type 4X	

Accessories

Sealing Caps

Description	For Use With	Cat. No.
Plastic Sealing Cap (M12)∗	Input I/O Connection	1485A-M12
AC Micro Aluminum Sealing Cap - External∗	Output I/O Connection	889A-RMCAP
Stainless Steel Sealing Cap (M12)❄	Input I/O Connection	1485AS-C3
Stainless Steel Sealing Cap (M12)❄	Output I/O Connection	889AS-RMCAP

∗ To achieve IP67 rating, sealing caps must be installed on all unused I/O connections.
❄ To achieve IP69K/NEMA 4X rating, sealing caps must be installed on all unused I/O connections.

Cables

Description	Cable Rating	Length m (ft)	Cat. No.
Extended Motor Cable Cordsets			
90° M22 Motor Cordset	IP67/NEMA Type 4	6 (19.6)	280-MTR22-M6
		14 (45.9)	280-MTR22-M14
90° M35 Motor Cordset	IP67/NEMA Type 4	6 (19.6)	280-MTR35-M6
		14 (45.9)	280-MTR35-M14
90° M22 Motor Cordset	IP69K	6 (19.6)	280S-MTR22-M6
		14 (45.9)	280S-MTR22-M14
90° M35 Motor Cordset	IP69K	6 (19.6)	280S-MTR35-M6
		14 (45.9)	280S-MTR35-M14
Motor Cable Patchcords			
90° Male/Straight Female M22	IP67/NEMA Type 4	1 (3.3)	280-MTR22-M1D
		3 (9.8)	280-MTR22-M3D
90° Male/Straight Female M35	IP67/NEMA Type 4	1 (3.3)	280-MTR35-M1D
		3 (9.8)	280-MTR35-M3D
90° Male/Straight Female M22	IP69K	1 (3.3)	280S-MTR22-M1D
		3 (9.8)	280S-MTR22-M3D
90° Male/Straight Female M35	IP69K	1 (3.3)	280S-MTR35-M1D
		3 (9.8)	280S-MTR35-M3D
Brake Cable Cordsets			
90° M25 Source Brake Cable	IP67/NEMA Type 4	6 (19.6)	285-BRC25-M6
		14 (45.9)	285-BRC25-M14
	IP69K	6 (19.6)	285S-BRC25-M6
		14 (45.9)	285S-BRC25-M14

ArmorPoint® Media §

Description	Length m (ft)	Cat. No.
ArmorPoint Bus Extension Cable including Terminating Resistor	1 m (3.3)	280A-EXT1
Extension Cable to connect two ArmorStart Distributed Motor Controllers to ArmorPoint communication protocol	1 m (3.3)	280A-EXTCABLE

§ ArmorPoint media is only available with an IP67/NEMA Type 4 rating.

DeviceNet Media ♣

Description		Length m (ft)	Cat. No.
			Sealed
	KwikLink pigtail drops are Insulation Displacement Connector (IDC) with integral Class 1 round cables for interfacing devices or power supplies to flat cable	1 (3.3)	1485P-P1E4-B1-N5
		2 (6.5)	1485P-P1E4-B2-N5
		3 (9.8)	1485P-P1E4-B3-N5
		6 (19.8)	1485P-P1E4-B6-N5
	DeviceNet Mini- T-Port Tap	Left Keyway	1485P-P1N5-MN5KM
		Right Keyway	1485P-P1N5-MN5NF

Description		Connector	Cat. No.
	Grey PVC Thin Cable	Mini Straight Female Mini Straight Male	1485G-P❄N5-M5
		Mini Straight Female Mini Right Angle Male	1485G-P❄W5-N5
		Mini Right Angle Female Mini Straight Male	1485G-P❄M5-Z5
		Mini Right Angle Female Mini Straight Male	1485G-P❄W5-Z5
	Thick Cable	Mini Straight Female Mini Straight Male	1485C-P‡N5-M5
		Mini Straight Female Mini Right Angle Male	1485C-P‡W5-N5
		Mini Right Angle Female Mini Straight Male	1485C-P‡M5-Z5
		Mini Right Angle Female Mini Straight Male	1485C-P‡W5-Z5

Description		Length m (ft)	Cat. No.
	DeviceNet Configuration Terminal Used to interface with objects on a DeviceNet network. Includes 1 m communications cable.	1 (3.3)	193-DNCT
	Communication cable, color-coded bare leads	1 (3.3)	193-CB1
	Communication cable, micro-connector (male)	1 (3.3)	193-CM1
	Panel Mount Adapter/Door Mount Bezel Kit	—	193-DNCT-BZ1

♣ See publication M116-CA001_-EN-P for complete cable selection information.
❄ Replace symbol with desired length in meters (Example: **1485G-P1N5-M5** for a 1 m cable). Standard cable lengths: 1, 2, 3, 4, 5, and 6 m.
‡ Replace symbol with desired length in meters (Example: **1485C-P1N5-M5** for a 1 m cable). Standard cable lengths: 1, 2, 3, 4, 5, 6, 8, 10, 12, 18, 24, and 30 m.

Sensor Media ⌘

Description		ArmorStart I/O Connection	Pin Count	Connector	Cat. No.
	DC Micro Patchcord	Input	5-pin	Straight Female Straight Male	889D-F4ACDM-➢
				Straight Female Right Angle Male	889D-F4ACDE-➢
	DC Micro V-Cable	Input	5-pin	Straight Female	879D-F4ACDM-➢
				Right Angle Male	879D-R4ACM-➢
	AC Micro Patchcord	Output	3-pin	Straight Female Straight Male	889R-F3AERM-➢
				Straight Female Right Angle Male	889R-F3AERE-➢

⌘ See publication M116-CA001A-EN-P for complete cable selection information.
➢ Replace symbol with desired length in meters (Example: **889D-F4ACDM-1** for a 1 m cable). Standard cable lengths: 1, 2, 5, and 10 m.
NOTE: Stainless steel versions may be ordered by adding an "**S**" to the cat. no. (Example: **889DS-F4ACDM-1**)

Peer-to-Peer Communications

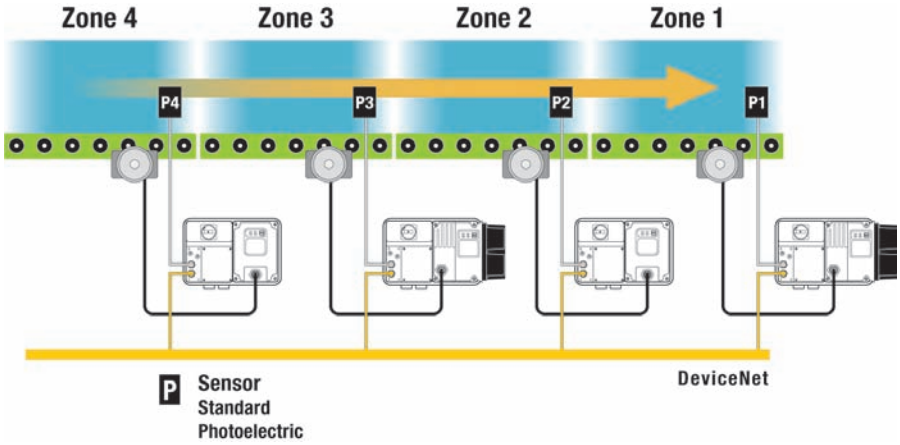

The Zone Control capabilities of ArmorStart Distributed Motor Controller is ideal for large horsepower (0.5…10 Hp) motored conveyors. The ArmorStart Distributed Motor Controllers have built-in DeviceNet Communications, DeviceLogix technology, and the added Zone Interlocking Parameters (ZIP) which allows one ArmorStart to consume data directly from up to four other DeviceNet nodes without going through the network scanner. These direct communications between conveyor zones are beneficial in a merge, diverter, and accumulation conveyor applications.

ArmorStart to ArmorPoint Connectivity - (Networks other than DeviceNet)

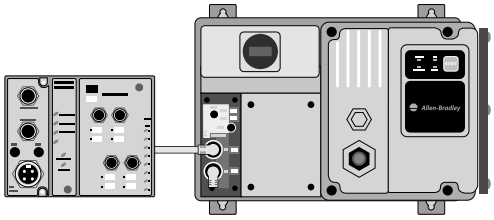

When connecting to the Bulletin 1738 ArmorPoint Distributed I/O product, a network adapter and at least one ArmorPoint Digital Output, Digital Input, Analog, AC and Relay product, or Specialty product must be selected. The ArmorPoint Distributed I/O can accomodate up to 63 modules per network node. The cable that connects the ArmorPoint Distributed I/O product to the ArmorStart Distributed Motor Controller is the Bulletin 280A-EXT1. The 280A-EXT1 includes an ArmorPoint bus extension cable and a network terminating resistor.

Note: Access to DeviceLogix programming is available with RSNetworx for DeviceNet.

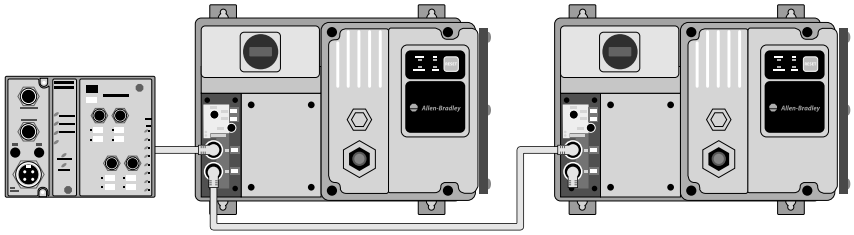

If an additional ArmorStart Distributed Motor Controller is to be connected, the Bulletin 280A-EXTCABLE will be required. A maximum of two ArmorStart Distributed Motor Controllers can be connected to the Bulletin 1738 Distributed I/O.

I/O Expansion with DeviceNet

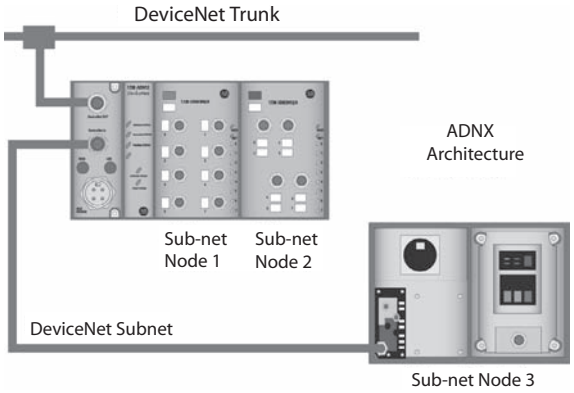

If the I/O capability of the Bulletin 280/281D ArmorStart Distributed Motor Controller needs to be expanded beyond the standard four inputs and two outputs, the ArmorStart Distributed Motor Controller with the DeviceNet communication protocol can be configured to the ADNX Architecture, in which the ArmorStart is part of the DeviceNet subnet, using the Bulletin 1738-ADNX ArmorPoint Distributed I/O product.

Bulletin 1738 ArmorPoint Distributed I/O Products

Digital Output Products

	Description	Cat. No.
	24V DC, eight source output with eight M12 connectors	1738-OB8EM12
	24V DC, eight source output with eight M8 connectors	1738-OB8EM8
	24V DC, four source output with four M12 connectors	1738-OB4EM12
	24V DC, four source output with four M8 connectors	1738-OB4EM8
	24V DC, two source output with two M12 connectors	1738-OB2EM12
	24V DC, two source output, 2 A prot. with two M12 connectors	1738-OB2EPM12
	24V DC, four sink output with four M12 connectors	1738-OV4EM12

Digital Input Products

	Description	Cat. No.
	24V DC, eight sink input with four M12 connectors, two points per connector	1738-IB8M12
	24V DC, eight sink input with eight M8 connectors	1738-IB8M8
	24V DC, eight sink input with one M23 connector	1738-IB8M23
	24V DC, four sink input with four M12 connectors	1738-IB4M12
	24V DC, four sink input with four M8 connectors	1738-IB4M8
	24V DC, two sink input with two M12 connectors	1738-IB2M12
	24V DC, four source input with four M12 connectors	1738-IV4M12

Analog Products

	Description	Cat. No.
	24V DC analog current input with two M12 connectors	1738-IE2CM12
	24V DC analog voltage input with two M12 connectors	1738-IE2VM12
	24V DC analog current output with two M12 connectors	1738-OE2CM12
	24V DC analog voltage output with two M12 connectors	1738-OE2VM12
	24V DC, two thermocouple input	1738-IT2IM12
	24V DC, two RTD input	1738-IR2M12

Power Supply Products

	Description	Cat. No.
	ArmorPoint I/O Field Potential Distributor Module	1738-FPD
	24V DC Expansion Power Supply	1738-EP24DC

AC and Relay Products

	Description	Cat. No.
	24V DC Coil, N.O. DPST relay with two M12 connectors	1738-OW4M12
	24V DC Coil, N.O. DPST relay with two AC M12 connectors	1738-OW4M12AC
	120V AC, two input with two AC 4-pin M12 connectors	1738-IA2M12AC4
	120V AC, two input with two AC 3-pin M12 connectors	1738-IA2M12AC3
	120/230V AC, two output with two AC 3-pin M12 connectors	1738-OA2M12AC3

Specialty Products

	Description	Cat. No.
	ArmorPoint I/O RS-232 ASCII Serial Interface Module	1738-232ASCM12
	ArmorPoint I/O RS-485 ASCII Serial Interface Module	1738-485ASCM12
	24V DC Very High Speed Counter Module	1738-VHSC24M23
	ArmorPoint 5V Encoder/Counter Module	1738-IJM23
	ArmorPoint Synchronous Serial Interface Module with Absolute Encoder	1738-SSIM23

Adapter Products

	Description	Cat. No.
	ArmorPoint DeviceNet Adapter Module, Drop or Pass-through, with male and female M12 connectors	1738-ADN12
	ArmorPoint DeviceNet Adapter Module, Drop only, with male M18 connector	1738-ADN18
	ArmorPoint DeviceNet Adapter Module, Drop or Pass-through, with male and female M18 connectors	1738-ADN18P
	ArmorPoint DeviceNet 24V DC Adapter Module with subnet expansion	1738-ADNX
	ArmorPoint Redundant ControlNet Adapter Module	1738-ACNR
	ArmorPoint Ethernet/IP 10/100 Mbps Adapter Module	1738-AENT

Electrical Ratings		UL/NEMA	IEC
Power Circuit	Rated Operation Voltage	200…575Y	200…575V
	Rate Insulation Voltage	600V	500V
	Rated Impulsed Voltage	6 kV	6 kV
	Dielectric Withstand	2200V AC	2500V AC
	Operating Frequency	50/60 Hz	50/60 Hz
	Utilization Category	N/A	AC-3
	Protection Against Shock	N/A	IP2X
	Rated Operating Current Max.	3.0 A	
		5.5 A	
		7.6 A	
		16 A	
Control Circuit	Rated Operation Voltage	24V DC (+10%, -15%) A2 (should be grounded at voltage source)	
		120V AC (+10%, -15%) A2 (should be grounded at voltage source)	
		240V AC (+10%, -15%) A2 (should be grounded at voltage source)	
	Rated Insulation Voltage	250V	250V
	Rated Impulsed Voltage	—	4 kV
	Dielectric Withstand	1500V AC	2000V AC
	Overvoltage Category	—	III
	Operating Frequency	50/60 Hz	

		Current Rating	Voltage	480Y/277V	480/480V	600Y/347V	600V
Short Circuit Protection	SCPD Performance Type 1	1.1…3.0 A	Sym. Amps RMS	65 kA	65 kA	30 kA	30 kA
		3.0…5.5 A					
		5.3…7.6 A					
		6.3…16 A		30 kA	30 kA	30 kA	30 kA
	SCPD List	Size per NEC Group Motor			—		

Power Requirements				
	Units			
Control Voltage (Nom)	Volts	24V DC	120V AC	240V AC
Power supply (Nom)	Amps	0.170	0.110	0.060
Total Control Power (Starting/Stopping)	VA (W)	(90 W)	35	35
Total Control Power (Running)	VA (W)	(8 W)	28	28
External Devices powered by Control Voltage				
Outputs (2) (1 A max. each)	Amps	2	2	2
Total Control (Pick Up) with max outputs	VA (W)	(138 W)	275	515
Total Control (Hold In) with max outputs	VA (W)	(56 W)	268	508

Input Ratings	Rated Operation Voltage	24V DC	
	Rated Insulation Voltage	1500V AC	
	Input On-State Voltage Range	10…26V DC	
	Input On-State Current	3.0 mA @ 10V DC	
		7.2 mA @ 24V DC	
	Input Off-State Voltage Range	0…5V DC	
	Input Off-State Current	<1.5 mA	
	Input Filter — Software Selectable		
	Off to On	Settable from 0…64 ms in 1 ms increments	
	On to Off	Settable from 0…64 ms in 1 ms increments	
	Input Compatibility	N/A	IEC 1+
	Number of Inputs	4	
	Sensor Source		
	Voltage Status Only	11…25V DC from DeviceNet	
	Current Available	50 mA max. per input, 200 mA total	
Output Ratings (Sourced from Control Circuit)	Rated Operation Voltage	250V AC/30V DC	250V AC/30V DC
	Rated Insulation Voltage	250V	250V
	Dielectric Withstand	1500V AC	2000V AC
	Operating Frequency	50/60 Hz	50/60 Hz
	Type of Control Circuit	Electromechanical relay	
	Type of Current	AC/DC	
	Conventional Thermal Current Ith	Total of both outputs ≤ 2 A	
	Type of Contacts	Normally open (N.O.)	
	Number of Contacts	2	
ArmorPoint Ratings	Backplane Current Load	400 mA	

		UL/NEMA	IEC
Environmental	Operating Temperature Range	-20…+40 °C (-4…+104 °F)	
	Storage and Transportation temperature range	–25….+85 °C (–13…+185 °F)	
	Altitude	2000 m	
	Humidity	5…95% (non-condensing)	
	Pollution Degree	3	
	Enclosure Ratings	NEMA 4/12/13	IP67
	Enclosure Ratings	NEMA 4X	IP69K
	Approximate Shipping Weight	16.8 kg (37 lb)	
Mechanical	**Resistance to Shock**		
	Operational	15 G	
	Non-Operational	30 G	
	Resistance to Vibration		
	Operational	1 G, 0.15 mm (0.006 in.) displacement	
	Non-Operational	2.5 G, 0.38 mm (0.015 in.) displacement	
	Power and Ground Terminals		
	Wire Size	Primary/Secondary terminal: (#16 …#10 AWG)	Primary/Secondary terminal: 1.5…4.0 mm²
	Tightening Torque	Primary terminal: 10.8 lb•in Secondary terminal: 4.5 lb•in	Primary terminal: (1.2 N•m) Secondary terminal: (0.5 N•m)
	Wire Strip Length	0.35 in. (9 mm)	
	Control and Safety Monitor Inputs		
	Wire Size	(18…10 AWG)	1.0…4.0 mm²
	Tightening Torque	6.2 lb•in	0.7 N•m
	Wire Strip Length	0.35 in. (9 mm)	
Other Rating	**EMC Emission Levels**		
	Conducted Radio Frequency Emissions	Class A	
	Radiated Emissions	Class A	
	EMC Immunity Levels		
	Electrostatic Discharge	4 kV contact and 8 kV Air	
	Radio Frequency Electromagnetic Field	10V/m	
	Fast Transient	2 kV	
	Surge Transient	1 kV (12) $_{L-L}$, 2 kV (2) $_{L-N}$ (earth)	
	Overload Characteristics		
	Overload Current Range	1.1…3.0 A	
		3.0…5.5 A	
		5.3…7.6 A	
		6.3…16 A	
	Trip Class	10	
	Trip Rating	120% of FLC setting	
	Number of Poles	3	
	DeviceNet Specifications		
	DeviceNet Supply Voltage Rating	Range 11…25V DC, 24V DC nominal	
	DeviceNet Input Current	167 mA @ 24V DC - 4.0 W	
		364 mA @ 11V DC - 4.0 W	
	External Devices powered by DeviceNet	Sensors inputs 4 x 50 mA - total 200 mA	
	Total w/max Sensor Inputs (4)	367 mA @ 24V DC - 8.8 W	
	DeviceNet Input Current Surge	15 A for 250 µs	
	DeviceNet Communications		
	Baud Rates	125, 250, 500 kbps	
	Distance Maximum	500 m (1630 ft) @ 125 kbps	
		200 m (656 ft) @ 250 kbps	
		100 m (328 ft) @ 500 kbps	
	Certifications	cULus (File No. E96956) UL 508 EN/IEC 60947-4-2 CE Marked per Low Voltage Directive 73/23/EEC and EMC Directive 89/336/EEC	

External Connections for Input Connector

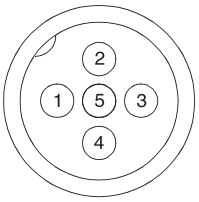

Pin 1: +V Out
Pin 2: Input
Pin 3: Comm
Pin 4: Input
Pin 5: NC (No Connection)

External Connections for Output Connector

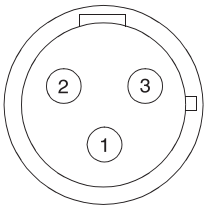

Pin 1: PE
Pin 2: Return
Pin 3: Relay Out

External Connections for Motor Connector (≤ 5 Hp @ 460V AC)

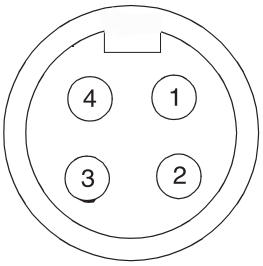

Pin 1: T1 - Black
Pin 2: T2 - White
Pin 3: T3 - Red
Pin 4: Ground - Green/Yellow

External Connections for Motor Connector (> 5 Hp @ 460V AC)

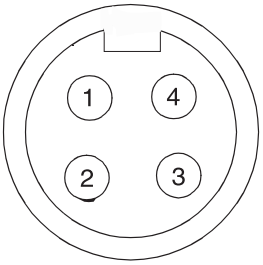

Pin 1: T1 - Black
Pin 2: Ground - Green/Yellow
Pin 3: T3 - Red
Pin 4: T2 - White

Overload Curves

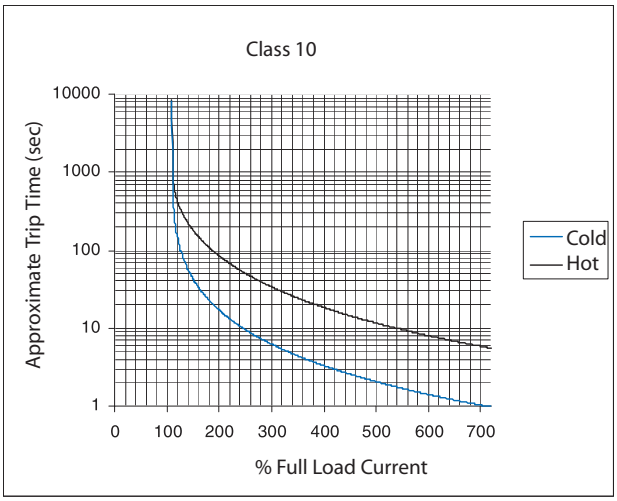

External Connections for Brake Contactor Connector

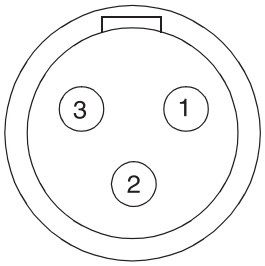

Pin 1: L1 - Black
Pin 2: GND - Green/Yellow
Pin 3: L2 - White

External Connections for DeviceNet Connector

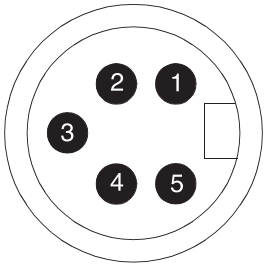

Pin 1: Drain (Not Connected)
Pin 2: +VDNET
Pin 3: -VDNET
Pin 4: CAN_H
Pin 5: CAN_L

External Connections for ArmorPoint Interface (IN)

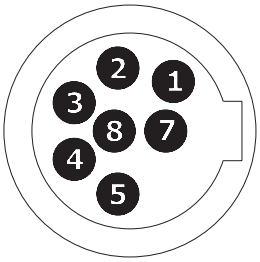

Pin 1: CAN High
Pin 2: Common
Pin 3: +5V
Pin 4: CAN Low
Pin 5: Enable In
Pin 7: Common
Pin 8: PE

External Connections for ArmorPoint Interface (OUT)

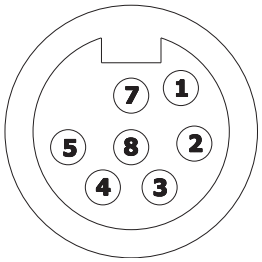

Pin 1: CAN High
Pin 2: Common
Pin 3: +5V
Pin 4: CAN Low
Pin 5: Enable Out
Pin 7: Common
Pin 8: NC (No Connection)

Dimensions in millimeters (inches). Dimensions are not intended to be used for manufacturing purposes. All dimensions are subject to change.

Dimensions for IP67/NEMA Type 4 with Conduit Entrance

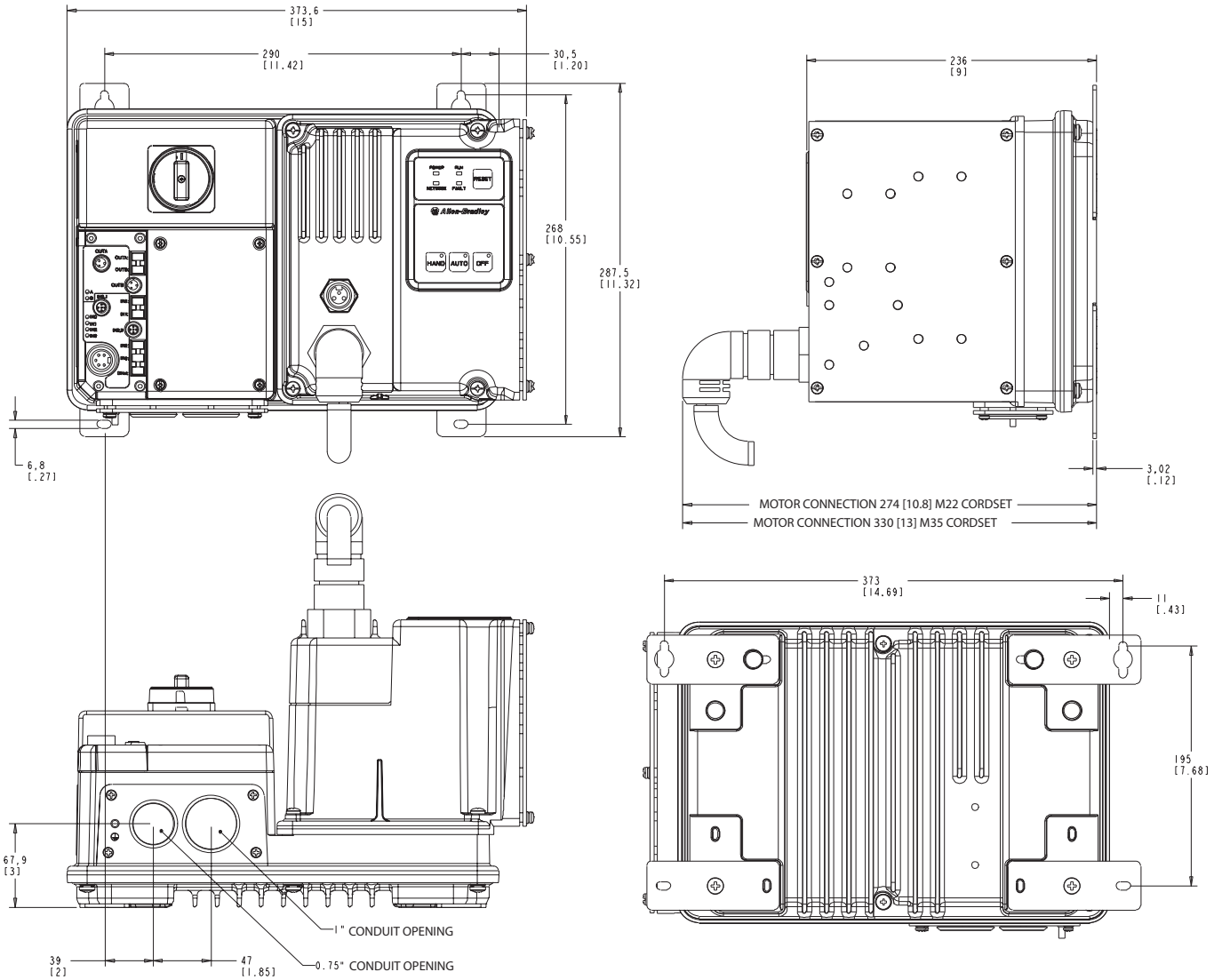

Dimensions in millimeters (inches). Dimensions are not intended to be used for manufacturing purposes. All dimensions are subject to change.

Dimensions for IP67/NEMA Type 4 with ArmorConnect Connectivity

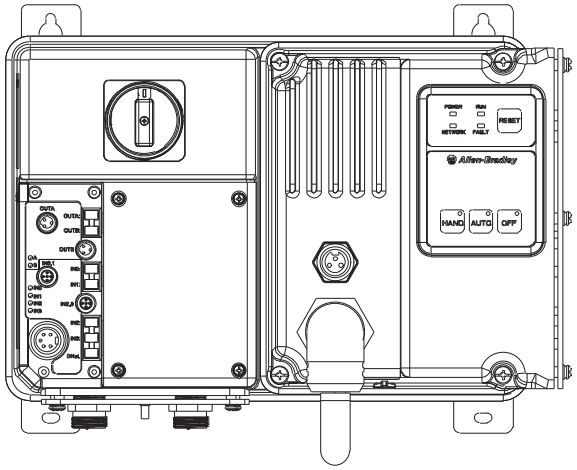

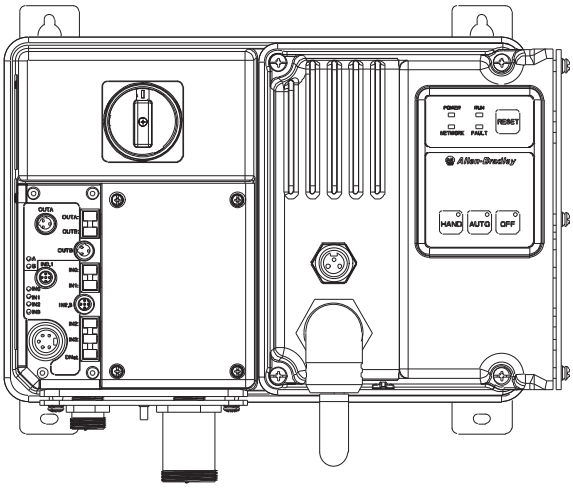

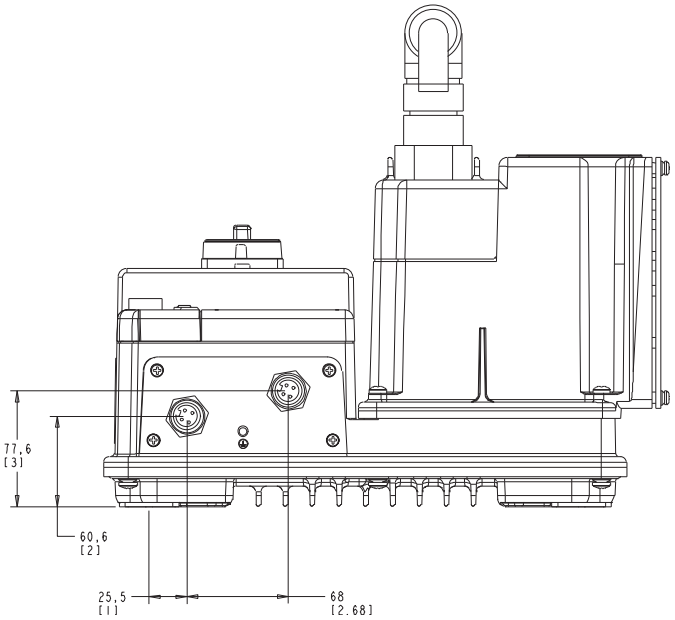

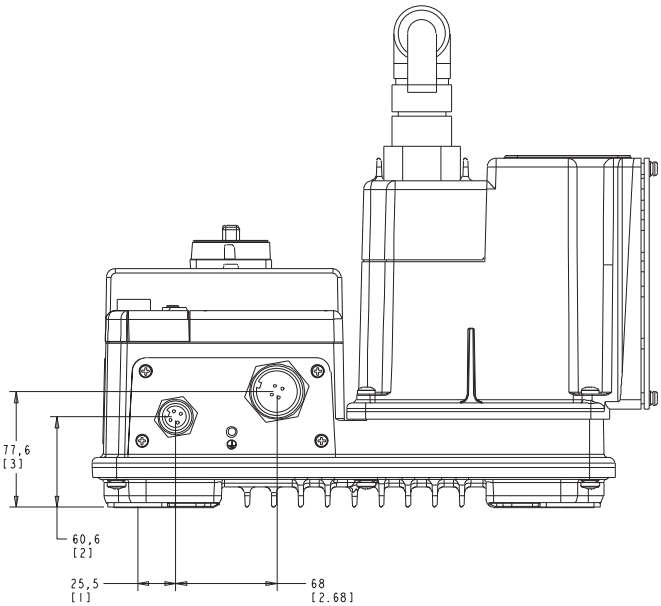

Dimensions in millimeters (inches). Dimensions are not intended to be used for manufacturing purposes. All dimensions are subject to change.

Dimensions for NEMA Type 4X with Conduit Entrance

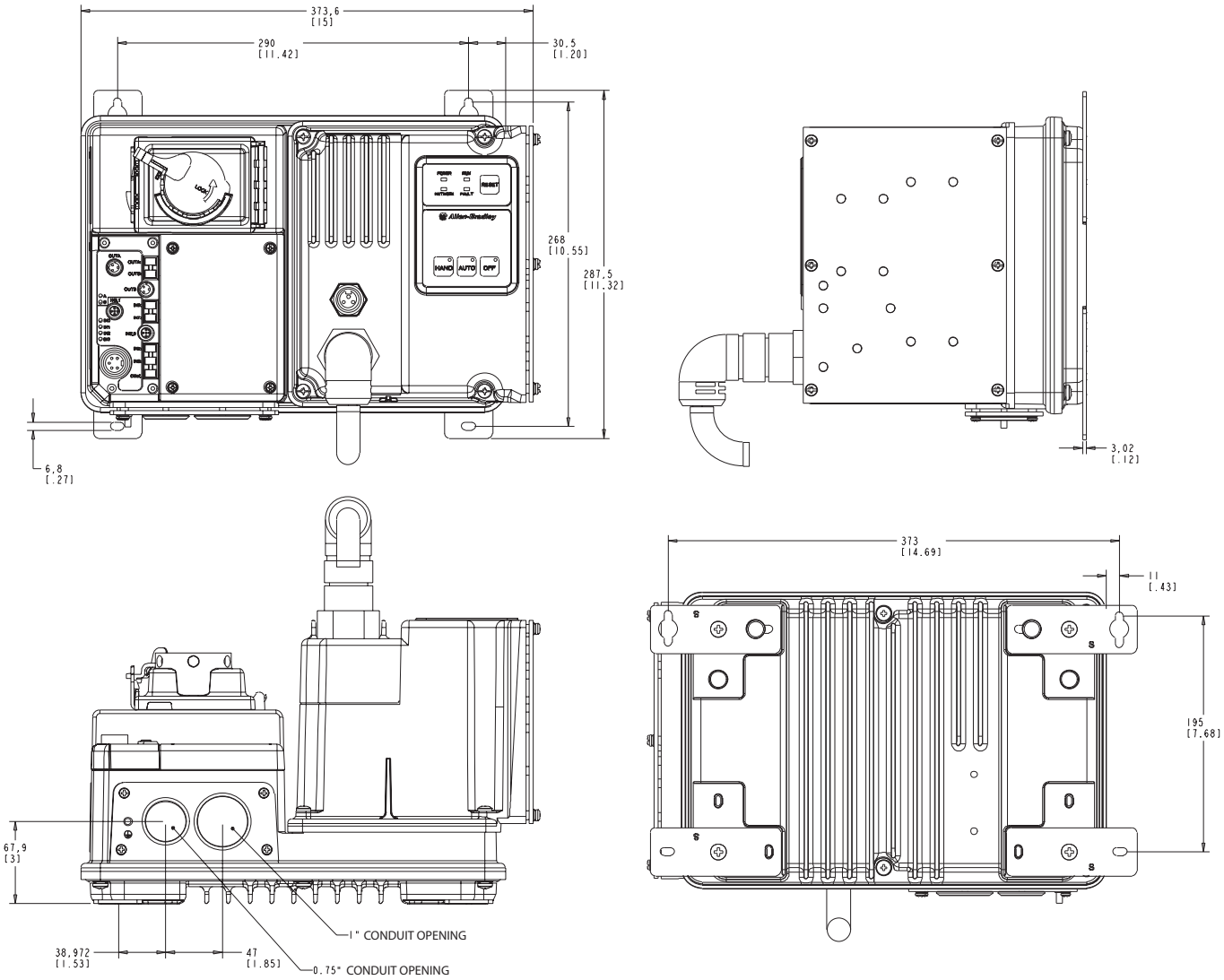

Dimensions in millimeters (inches). Dimensions are not intended to be used for manufacturing purposes. All dimensions are subject to change.

Dimensions for NEMA Type 4X with ArmorConnect Connectivity

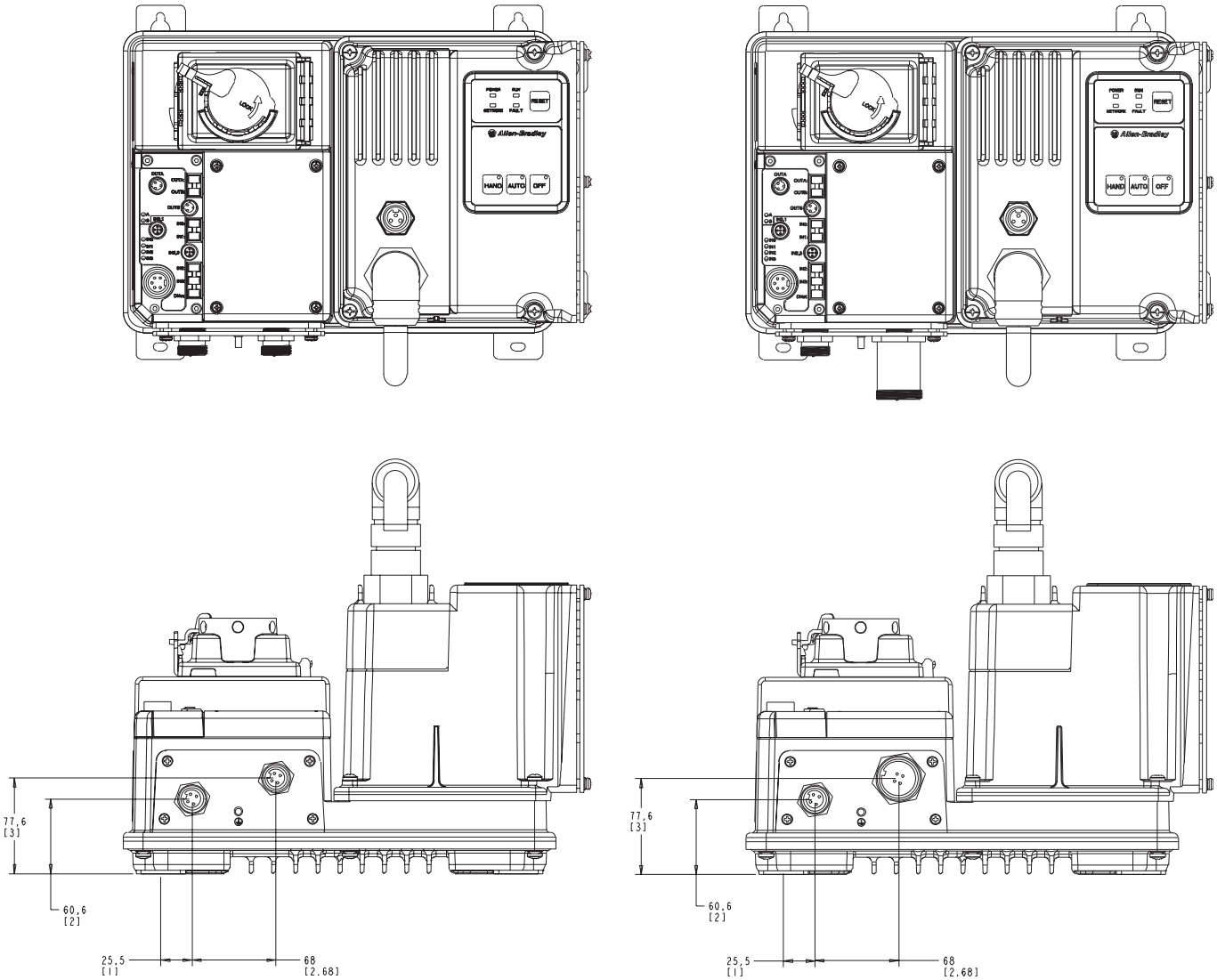

Bulletin 284 ArmorStart Distributed Motor Controller

- On-Machine starting solution
- Variable frequency AC drive using PowerFlex® technology
- Horsepower range 0.5…5 Hp (0.4…3.3 kW)
- Robust IP67/NEMA Type 4 and NEMA Type 4X enclosure rating
- Modular plug and play design
- Quick disconnect connections for I/O, communications, motor, three-phase, and control power
- Four inputs and two outputs (expandable with ArmorPoint)
- LED status indication
- DeviceNet communications
- DeviceLogix component technology
- Peer-to-peer communications (ZIP)
- Connectivity to ArmorPoint distributed I/O products
- ControlNet and EtherNet communication via ArmorPoint
- Factory installed options:
  - EMI filter
  - Dynamic brake connector
  - Output contactor
  - 0…10V analog input
  - Hand/Off/Auto (HOA) keypad configuration
  - Control brake contactor
  - Source brake contactor
  - Shielded motor cable
  - Safety monitor

Table of Contents

Product Overview..... this page
Product Selection..... 35
Accessories 41
Specifications 46
Approx. Dimensions... 49

Standards Compliance

UL 508C
CSA C22.2, No. 14
EN/IEC 60947-1, EN 50178, EN 61800-3
CE Marked per Low Voltage Directive 73/23/EEC and EMC Directive 89/336/EEC

Certifications

cULus (File No. E207834, Guide NMMS, NMMS7)

Description

The Bulletin 284 ArmorStart Distributed Motor Controller is an integrated, pre-engineered starter for variable frequency AC drive applications. The ArmorStart offers a robust IP67/NEMA Type 4 enclosure design, which is suitable for water wash-down environments. The ArmorStart products are also offered with NEMA Type 4X rating, suitable for environment wash down with caustic chemicals used in the food and beverage industry. The wash-down rating is 1000 psi for the NEMA Type 4X rated devices. The modular plug-and-play design offers simplicity in wiring the installation. The quick disconnects for the I/O, communication, and motor connection reduce the wiring time and eliminate wiring errors. The ArmorStart offers, as standard, four DC inputs and two relay outputs to be used with sensors and actuators respectively, for monitoring and controlling the application process. The ArmorStart's LED status indication and built-in diagnostics capabilities allows ease of maintenance and troubleshooting. The optional Hand/Off/Auto (HOA) keypad allows for local start/stop control at the ArmorStart Distributed Motor Controller.

The Bulletin 284 ArmorStart Distributed Motor Controller offers short circuit protection per UL 508C and IEC 60947-1. The ArmorStart is rated for local-disconnect service by incorporating the Bulletin 140 Motor Protector as the local-disconnect, eliminating the need for additional components. The ArmorStart Distributed Motor Controllers are suitable for group motor installations.

Mode of Operation

Volts per Hertz (Sensorless Vector Performance)

This method provides excellent speed regulation and high levels of torque across the entire speed range of the drive, and improved speed regulation even as loading increases. Basic control yields the most cost effective performance when sensorless vector control is not required.

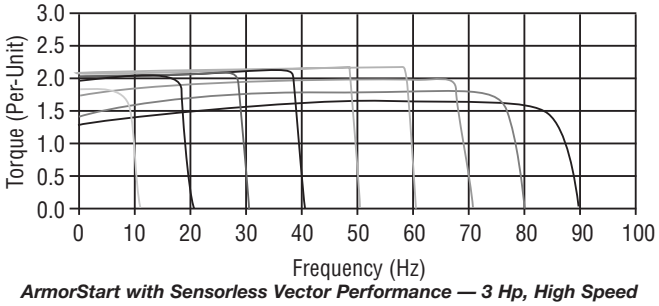

ArmorStart with Sensorless Vector Performance — 3 Hp, High Speed

Additional Features

- Four Preset Speeds
- Flying Start
- Auto Restart

Sensorless Vector Control (SVC)

Sensorless vector control provides exceptional speed regulation and very high levels of torque across the entire speed range of the drive.

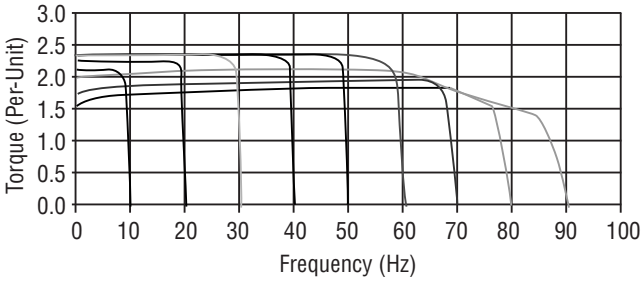

ArmorStart with Sensorless Vector Control — 3 Hp, High Speed

Additional Features

- Eight Preset Speeds
- Skip Frequency
- Flying Start
- Auto Restart
- Process Control Loop (PID)
- Step Logic Functionality
- Timer/Counter Functions

Description of Features

Overload Protection

The Bulletin 284 ArmorStart Distributed Motor Controller incorporates, as standard, electronic motor overload protection. This overload protection is accomplished electronically with an I^2t algorithm. The ArmorStart's overload protection is programmable via the communication network providing the user with flexibility. The overload trip class allows for class 10 overload protection. Ambient insensitivity is inherent in the electronic design of the overload.

Gland Plate Entrance

The ArmorStart product offers two different methods for connecting incoming three-phase and control power to the device. One method offered is the traditional conduit entrance which provides a 3/4 and 1 in. conduit hole opening for wiring three-phase and control power. The second method offers connectivity to the ArmorConnect power media. Factory installed receptacles are provided for connectivity to both three-phase and control power media.

Description of Features, Continued

Motor Cable
With every Bulletin 284 ArmorStart Distributed Motor Controller, a 3–meter unshielded 4-conductor cordset is provided with each unit as standard. If the optional EMI filter is selected, a 3–meter shielded 4-conductor cordset is provided with each unit as standard.

LED Status Indication
The LED Status Indication provides four status LEDs and a Reset button. The LEDs provide status indication for the following:

- **POWER LED**
  The LED is illuminated solid green when control power is present and with the proper polarity
- **RUN LED**
  This LED is illuminated solid green when a start command and control power are present
- **NETWORK LED**
  This bicolor (red/green) LEDs indicates the status of the communication link
- **FAULT LED**
  Indicates Controller Fault (trip) condition
- The "Reset Button" as a local trip reset.

Inputs
The inputs are single keyed (two inputs per connector), which are sourced from DeviceNet power (24V DC), with LED status indication.

Outputs
Two dual-key relay output connectors are supplied as standard. The outputs are sourced from the control voltage power, which can be either, 24V DC, 120V AC, or 240V AC with LED status indication.

Fault Diagnostics
Fault diagnostics capabilities built into the Bulletin 284 ArmorStart Distributed Motor Controller help you pinpoint a problem for easy troubleshooting and quick re-starting.

- Short Circuit
- Overload
- Phase Short
- Ground Fault
- Stall
- Control Power Loss
- Control Power Fuse Protection
- I/O Fault
- Overcurrent
- Brake Fuse Protection
- Overtemperature
- Output Fuse Protection
- DeviceNet Power Loss
- Internal Communication Fault
- DC Bus Fault
- EEPROM Fault
- Hardware Fault
- Restart Retries
- Miscellaneous Fault

Network and Expandable I/O Capabilities
The Bulletin 284D ArmorStart Distributed Motor Controller delivers enhanced control to access parameter settings and provides fault diagnostics, and remote start/stop control. DeviceNet is the communication protocol, provided with the ArmorStart including DeviceLogix.

The Bulletin 284A ArmorStart Distributed Motor Controller allows connectivity to the ArmorPoint backplane. The ArmorPoint I/O system can communicate using DeviceNet, ControlNet, or EtherNet communication protocols. In addition to the different network protocols, the ArmorPoint Distributed I/O products allow the I/O capability to be expanded beyond the standard two outputs. The two dual-key relay output connectors are supplied as standard. The outputs are sourced from the control voltage power of 24V DC, 120V AC, or 240V AC. LED status indication is also provided, as standard with ArmorPoint. When using the ArmorPoint, a maximum of two ArmorPoint Distributed Motor Controllers can be connected to the ArmorPoint Distributed I/O product.

Factory Installed Options

EMI Filter
The EMI Filter option is required if the Bulletin 284 ArmorStart Distributed Motor requires to be CE compliant. If the EMI Filter is selected, a 3–meter shielded 4–conductor cordset is provided as standard. This option is only available with sensorless vector control.

Dynamic Brake Connector
A 3-meter, 3-pin cable for connection to a dynamic brake module is provided as standard when this option is selected. See Accessories on page 43 for available dynamic brake modules.

IP67 Dynamic Brake Resistor
The IP67 Dynamic Brake Resistor plug-and-play design offers simplicity in wiring and installation. The factory-installed option of DB1 must be selected in order to have the quick disconnect connectivity. The cable length of the IP67 Dynamic Brake Resistor is available in two lengths, 0.5 and 1.0 m. See page 43 Accessories, for available IP67 Dynamic Brake Resistors.

Control Brake Contactor
An internal contactor is used to switch the electromechanical motor brake On/Off. The motor brake is powered from the control voltage circuit. A customer accessible 3.0 A fuse is provided to protect the brake cable. One 3-meter 3-pin cable for connection to the motor brake is provided as standard when this option is selected.

Source Brake Contactor
An internal contactor is used to switch the electromechanical motor brake on/off. The motor brake is powered from the main power circuit. A customer accessible 3.0 A fuse is provided to protect the brake cable. A 3 meter, 3-pin cable for connection to the motor, is provided as standard when this option is selected.

HOA Selector Keypad with Jog Function
The HOA Selector Keypad with Jog Function allows for local start/stop control with capabilities to JOG and to Forward/Reverse motor direction.

Output Contactor
An internal contactor will be sourced from control voltage to isolate the load side of the Bulletin 284 ArmorStart Distributed Motor Controller. When control power is applied the output contactor is closed and when control power is removed the output contactor opens. There is no switching element such as a relay in the system. If control power is lost then the output contactor will open since its coil power is lost. A sequenced stop involving the output contact cannot be performed.

Shielded Motor Cable
A 3-meter shielded 4-conductor cordset is provided instead of the 3-meter unshielded 4-conductor cordset. If the EMI Filter is selected, a 3-meter shielded 4-conductor cordset is provided as standard.

Safety Monitor
The Safety Monitor Option allows for independent monitoring of the output status of the device. The function is implemented using a normally closed contact which complies with IEC 60947-5-1 for mechanically linked contacts. Two terminal blocks are provided as the inputs which maybe used with an external safety circuit. The external safety circuit monitors the status of the output contactor.

0…10V Analog Input
The Bulletin 284 Distributed Motor Controller with Sensorless Vector Control provides a 0…10V analog input. The 0…10V Analog Input, 15 A, factory-installed option provides a 0…10V external frequency command from the 0…10V or +/-10V analog input or remote potentiometer. A 5-pin micro receptacle is provided for connectivity for customer connection. A shielded 5-conductor cordset or patch cord is recommended.

Cat. No. Explanation

Examples given in this section are for reference purposes. This basic explanation should not be used for product selection; not all combinations will produce a valid catalog number.

284	D	–	F	H	D2P3	D	–	10	–	CR	–	Option 1	–	Option 2	–	Option 3
a	*b*		*c*	*d*	*e*	*f*		*g*		*h*		*i*		*j*		*k*

a

Bulletin Number	
284	VFD Starter

b

Communications	
D	DeviceNet™
A	ArmorPoint

c

Enclosure Type	
F	Type 4 (IP67)
S	Type 4X

d

Torque Performance Mode	
Code	Description
H	Volts per Hertz (Sensorless Vector Performance)

e

Output Current			
200…240V		380…480V	
Code	Description	Code	Description
B2P3	2.3 A, 0.4 kW, 0.5 Hp	D1P4	1.4 A, 0.4 kW, 0.5 Hp
B4P5	4.5 A, 0.75 kW, 1.0 Hp	D2P3	2.3 A, 0.75 kW, 1.0 Hp
B7P6	7.6 A, 1.5 kW, 2.0 Hp	D4P0	4.0 A, 1.5 kW, 2.0 Hp
—	—	D6P0	6.0 A, 2.2 kW, 3.0 Hp
—	—	D7P6	7.6 A, 3.3 kW, 5.0 Hp

f

Control Voltage	
Code	Description
Z	24V DC
D	120V AC
B	240V AC

g

Short Circuit Protection (Motor Circuit Protector)	
10	10 A Rated Device
25	25 A Rated Device

i

Option 1	
Code	Description
3	Hand/Off/Auto Selector Keypad with Jog Function

j

Option 2		
CB	blank	Control Brake Contactor
CB	W ∗	No cable
DB	blank	DB Brake Connector
DB1	blank	Connectivity to IP67 DB Resistor
SB	blank	Source Brake Contactor
SB	W ∗	No cable

k

Option 3	
Code	Description
OC	Output Contactor
SM ❄	Safety Monitor

h

Control and 3-Phase Power Connections / Motor Cable Connection (CR: Conduit/Round Media) or (RR: Round/Round Media)				
Code		Description		
		Control Power	3-Phase Power	Motor Cable
CR	blank	Conduit Entrance	Conduit Entrance	3 m, unshielded cordset male 90°
CR	N	Conduit Entrance	Conduit Entrance	3 m, shielded cordset male 90°
CR	W ∗	Conduit Entrance	Conduit Entrance	No cable
RR	blank	Round Media (Male Receptacle)	Round Media (Male Receptacle)	3 m, unshielded cordset male 90°
RR	N	Round Media (Male Receptacle)	Round Media (Male Receptacle)	3 m, shielded cordset male 90°
RR	W ∗	Round Media (Male Receptacle)	Round Media (Male Receptacle)	No cable

∗ See Accessories on page 41 for extended motor and brake cable lengths.
❄ The output contactor is included with the Safety Monitor option.

Product Selection

IP67/NEMA Type 4 with conduit entrance, DeviceNet communications and Volts per Hertz torque performance, Up to 480V AC

Input Voltage	3-Phase kW Rating	3-Phase Hp Rating	Output Current	24V DC Control Voltage Cat. No.	120V AC Control Voltage Cat. No.	240V AC Control Voltage Cat. No.
200...240V, 50/60 Hz 3-Phase	0.4	0.5	2.3	284D-FHB2P3Z-10-CR	284D-FHB2P3D-10-CR	284D-FHB2P3B-10-CR
	0.75	1	4.5	284D-FHB4P5Z-10-CR	284D-FHB4P5D-10-CR	284D-FHB4P5B-10-CR
	1.5	2	7.6	284D-FHB7P6Z-25-CR	284D-FHB7P6D-25-CR	284D-FHB7P6B-25-CR
380...480V, 50/60 Hz 3-Phase	0.4	0.5	1.4	284D-FHD1P4Z-10-CR	284D-FHD1P4D-10-CR	284D-FHD1P4B-10-CR
	0.75	1	2.3	284D-FHD2P3Z-10-CR	284D-FHD2P3D-10-CR	284D-FHD2P3B-10-CR
	1.5	2	4	284D-FHD4P0Z-10-CR	284D-FHD4P0D-10-CR	284D-FHD4P0B-10-CR
	2.2	3	6	284D-FHD6P0Z-25-CR	284D-FHD6P0D-25-CR	284D-FHD6P0B-25-CR
	3	5	7.6	284D-FHD7P6Z-25-CR	284D-FHD7P6D-25-CR	284D-FHD7P6B-25-CR

IP67/NEMA Type 4 with conduit entrance, ArmorPoint communications, and Volts per Hertz torque performance, Up to 480V AC

Input Voltage	3-Phase kW Rating	3-Phase Hp Rating	Output Current	24V DC Control Voltage Cat. No.	120V AC Control Voltage Cat. No.	240V AC Control Voltage Cat. No.
200…240V, 50/60 Hz 3-Phase	0.4	0.5	2.3	284A-FHB2P3Z-10-CR	284A-FHB2P3D-10-CR	284A-FHB2P3B-10-CR
	0.75	1	5	284A-FHB4P5Z-10-CR	284A-FHB4P5D-10-CR	284A-FHB4P5B-10-CR
	1.5	2	7.6	284A-FHB7P6Z-25-CR	284A-FHB7P6D-25-CR	284A-FHB7P6B-25-CR
380…480V, 50/60 Hz 3-Phase	0.4	0.5	1.4	284A-FHD1P4Z-10-CR	284A-FHD1P4D-10-CR	284A-FHD1P4B-10-CR
	0.75	1	2.3	284A-FHD2P3Z-10-CR	284A-FHD2P3D-10-CR	284A-FHD2P3B-10-CR
	1.5	2	4	284A-FHD4P0Z-10-CR	284A-FHD4P0D-10-CR	284A-FHD4P0B-10-CR
	2.2	3	6	284A-FHD6P0Z-25-CR	284A-FHD6P0D-25-CR	284A-FHD6P0B-25-CR
	3	5	7.6	284A-FHD7P6Z-25-CR	284A-FHD7P6D-25-CR	284A-FHD7P6B-25-CR

IP67/NEMA Type 4 with quick disconnects for ArmorConnect power media, DeviceNet communications and Volts per Hertz torque performance, Up to 480V AC

Input Voltage	3-Phase kW Rating	3-Phase Hp Rating	Output Current	24V DC Control Voltage Cat. No.	120V AC Control Voltage Cat. No.	240V AC Control Voltage Cat. No.
200…240V, 50/60 Hz 3-Phase	0.4	0.5	2.3	284D-FHB2P3Z-10-RR	284D-FHB2P3D-10-RR	284D-FHB2P3B-10-RR
	0.75	1	4.5	284D-FHB4P5Z-10-RR	284D-FHB4P5D-10-RR	284D-FHB4P5B-10-RR
	1.5	2	7.6	284D-FHB7P6Z-25-RR	284D-FHB7P6D-25-RR	284D-FHB7P6B-25-RR
380…480V, 50/60 Hz 3-Phase	0.4	0.5	1.4	284D-FHD1P4Z-10-RR	284D-FHD1P4D-10-RR	284D-FHD1P4B-10-RR
	0.75	1	2.3	284D-FHD2P3Z-10-RR	284D-FHD2P3D-10-RR	284D-FHD2P3B-10-RR
	1.5	2	4	284D-FHD4P0Z-10-RR	284D-FHD4P0D-10-RR	284D-FHD4P0B-10-RR
	2.2	3	6	284D-FHD6P0Z-25-RR	284D-FHD6P0D-25-RR	284D-FHD6P0B-25-RR
	3	5	7.6	284D-FHD7P6Z-25-RR	284D-FHD7P6D-25-RR	284D-FHD7P6B-25-RR

IP67/NEMA Type 4 with quick disconnects for ArmorConnect power media, ArmorPoint communications, and Volts per Hertz torque performance, Up to 480V AC

Input Voltage	3-Phase kW Rating	3-Phase Hp Rating	Output Current	24V DC Control Voltage Cat. No.	120V AC Control Voltage Cat. No.	240V AC Control Voltage Cat. No.
200…240V, 50/60 Hz 3-Phase	0.4	0.5	2.3	284A-FHB2P3Z-10-RR	284A-FHB2P3D-10-RR	284A-FHB2P3B-10-RR
	0.75	1	4.5	284A-FHB4P5Z-10-RR	284A-FHB4P5D-10-RR	284A-FHB4P5B-10-RR
	1.5	2	7.6	284A-FHB7P6Z-25-RR	284A-FHB7P6D-25-RR	284A-FHB7P6B-25-RR
380…480V, 50/60 Hz 3-Phase	0.4	0.5	1.4	284A-FHD1P4Z-10-RR	284A-FHD1P4D-10-RR	284A-FHD1P4B-10-RR
	0.75	1	2.3	284A-FHD2P3Z-10-RR	284A-FHD2P3D-10-RR	284A-FHD2P3B-10-RR
	1.5	2	4	284A-FHD4P0Z-10-RR	284A-FHD4P0D-10-RR	284A-FHD4P0B-10-RR
	2.2	3	6	284A-FHD6P0Z-25-RR	284A-FHD6P0D-25-RR	284A-FHD6P0B-25-RR
	3	5	7.6	284A-FHD7P6Z-25-RR	284A-FHD7P6D-25-RR	284A-FHD7P6B-25-RR

NEMA Type 4X with conduit entrance, DeviceNet communications and Volts per Hertz torque performance, Up to 480V AC

Input Voltage	3-Phase kW Rating	3-Phase Hp Rating	Output Current	24V DC Control Voltage Cat. No.	120V AC Control Voltage Cat. No.	240V AC Control Voltage Cat. No.
200…240V, 50/60 Hz 3-Phase	0.4	0.5	2.3	284D-SHB2P3Z-10-CR	284D-SHB2P3D-10-CR	284D-SHB2P3B-10-CR
	0.75	1	4.5	284D-SHB4P5Z-10-CR	284D-SHB4P5D-10-CR	284D-SHB4P5B-10-CR
	1.5	2	7.6	284D-SHB7P6Z-25-CR	284D-SHB7P6D-25-CR	284D-SHB7P6B-25-CR
380…480V, 50/60 Hz 3-Phase	0.4	0.5	1.4	284D-SHD1P4Z-10-CR	284D-SHD1P4D-10-CR	284D-SHD1P4B-10-CR
	0.75	1	2.3	284D-SHD2P3Z-10-CR	284D-SHD2P3D-10-CR	284D-SHD2P3B-10-CR
	1.5	2	4	284D-SHD4P0Z-10-CR	284D-SHD4P0D-10-CR	284D-SHD4P0B-10-CR
	2.2	3	6	284D-SHD6P0Z-25-CR	284D-SHD6P0D-25-CR	284D-SHD6P0B-25-CR
	3	5	7.6	284D-SHD7P6Z-25-CR	284D-SHD7P6D-25-CR	284D-SHD7P6B-25-CR

NEMA Type 4X with quick disconnects for ArmorConnect power media, DeviceNet communications and Volts per Hertz torque performance, Up to 480V AC

Input Voltage	3-Phase kW Rating	3-Phase Hp Rating	Output Current	24V DC Control Voltage Cat. No.	120V AC Control Voltage Cat. No.	240V AC Control Voltage Cat. No.
200…240V, 50/60 Hz 3-Phase	0.4	0.5	2.3	284D-SHB2P3Z-10-RR	284D-SHB2P3D-10-RR	284D-SHB2P3B-10-RR
	0.75	1	4.5	284D-SHB4P5Z-10-RR	284D-SHB4P5D-10-RR	284D-SHB4P5B-10-RR
	1.5	2	7.6	284D-SHB7P6Z-25-RR	284D-SHB7P6D-25-RR	284D-SHB7P6B-25-RR
380…480V, 50/60 Hz 3-Phase	0.4	0.5	1.4	284D-SHD1P4Z-10-RR	284D-SHD1P4D-10-RR	284D-SHD1P4B-10-RR
	0.75	1	2.3	284D-SHD2P3Z-10-RR	284D-SHD2P3D-10-RR	284D-SHD2P3B-10-RR
	1.5	2	4	284D-SHD4P0Z-10-RR	284D-SHD4P0D-10-RR	284D-SHD4P0B-10-RR
	2.2	3	6	284D-SHD6P0Z-25-RR	284D-SHD6P0D-25-RR	284D-SHD6P0B-25-RR
	3	5	7.6	284D-SHD7P6Z-25-RR	284D-SHD7P6D-25-RR	284D-SHD7P6B-25-RR

Cat. No. Explanation

Examples given in this section are for reference purposes. This basic explanation should not be used for product selection; not all combinations will produce a valid catalog number.

284	D	–	F	V	D2P3	D	–	10	–	CR	–	Option 1	–	Option 2	–	Option 3
a	b		c	d	e	f		g		h		i		j		k

a

Bulletin Number	
Code	Description
284	UFD Starter

b

Communications	
Code	Description
D	DeviceNet™
A	ArmorPoint

c

Enclosure Type	
Code	Description
F	Type 4 (IP67)
S	Type 4X

d

Torque Performance Mode	
Code	Description
V	Sensorless Vector Control and Volts per Hertz

e

Output Current					
200…240V		380…480V		500…600V	
Code	Description	Code	Description	Code	Description
B2P3	2.3 A, 0.4 kW, 0.5 Hp	D1P4	1.4 A, 0.4 kW, 0.5 Hp	E1P7	1.7 A, 0.75 kW, 1.0 Hp
B5P0	5.0 A, 0.75 kW, 1.0 Hp	D2P3	2.3 A, 0.75 kW, 1.0 Hp	E3P0	3.0 A, 1.5 kW, 2.0 Hp
B7P6	7.6 A, 1.5 kW, 2.0 Hp	D4P0	4.0 A, 1.5 kW, 2.0 Hp	E4P2	4.2 A, 2.2 kW, 3.0 Hp
—	—	D6P0	6.0 A, 2.2 kW, 3.0 Hp	E6P6	6.6 A, 4.0 kW, 5.0 Hp
—	—	D7P6	7.6 A, 3.3 kW, 5.0 Hp	—	—

f

Control Voltage	
Code	Description
Z	24V DC
D	120V AC
B	240V AC

g

Short Circuit Protection (Motor Circuit Protector)	
Code	Description
10	10 A Rated Device
25	25 A Rated Device

h

Control and 3-Phase Power Connections / Motor Cable Connection (CR: Conduit/Round Media) or (RR: Round/Round Media)				
Code		Description		
		Control Power	3-Phase Power	Motor Cable
CR	blank	Conduit Entrance	Conduit Entrance	3 m, unshielded cordset male 90°
CR	N	Conduit Entrance	Conduit Entrance	3 m, shielded cordset male 90°
CR	W ∗	Conduit Entrance	Conduit Entrance	No cable
RR	blank	Round Media (Male Receptacle)	Round Media (Male Receptacle)	3 m, unshielded cordset male 90°
RR	N	Round Media (Male Receptacle)	Round Media (Male Receptacle)	3 m, shielded cordset male 90°
RR	W ∗	Round Media (Male Receptacle)	Round Media (Male Receptacle)	No cable

∗ See Accessories on page 41 for extended motor and brake cable lengths.
❄ The output contactor is included with the Safety Monitor option.

i

Option 1	
Code	Description
3	Hand/Off/Auto Selector Keypad with Jog Function

j

Option 2		
CB	blank	Control Brake Contactor
CB	W ∗	No cable
DB	blank	DB Brake Connector
DB1	blank	Connectivity to IP67 DB Resistor
SB	blank	Source Brake Contactor
SB	W ∗	No cable

k

Option 3	
Code	Description
A10	0…10V Analog Input
EMI	EMI Filter
OC	Output Contactor
SM ❄	Safety Monitor

Product Selection

IP67/NEMA Type 4 with conduit entrance, DeviceNet communications, Sensorless Vector Control, and Volts per Hertz torque performance, Up to 575V AC

Input Voltage	3-Phase kW Rating	3-Phase Hp Rating	Output Current	24V DC Control Voltage Cat. No.	120V AC Control Voltage Cat. No.	240V AC Control Voltage Cat. No.
200...240V, 50/60 Hz 3-Phase	0.4	0.5	2.3	284D-FVB2P3Z-10-CR	284D-FVB2P3D-10-CR	284D-FVB2P3B-10-CR
	0.75	1	5	284D-FVB5P0Z-10-CR	284D-FVB5P0D-10-CR	284D-FVB5P0B-10-CR
	1.5	2	7.6	284D-FVB7P6Z-25-CR	284D-FVB7P6D-25-CR	284D-FVB7P6B-25-CR
380...480V, 50/60 Hz 3-Phase	0.4	0.5	1.4	284D-FVD1P4Z-10-CR	284D-FVD1P4D-10-CR	284D-FVD1P4B-10-CR
	0.75	1	2.3	284D-FVD2P3Z-10-CR	284D-FVD2P3D-10-CR	284D-FVD2P3B-10-CR
	1.5	2	4	284D-FVD4P0Z-10-CR	284D-FVD4P0D-10-CR	284D-FVD4P0B-10-CR
	2.2	3	6	284D-FVD6P0Z-25-CR	284D-FVD6P0D-25-CR	284D-FVD6P0B-25-CR
	3	5	7.6	284D-FVD7P6Z-25-CR	284D-FVD7P6D-25-CR	284D-FVD7P6B-25-CR
460…600V, 50/60 Hz 3-Phase	0.75	1	1.7	284D-FVE1P7Z-10-CR	284D-FVE1P7D-10-CR	284D-FVE1P7B-10-CR
	1.5	2	3	284D-FVE3P0Z-10-CR	284D-FVE3P0D-10-CR	284D-FVE3P0B-10-CR
	2.2	3	4.2	284D-FVE4P2Z-10-CR	284D-FVE4P2D-10-CR	284D-FVE4P2B-10-CR
	4	5	6.1	284D-FVE6P6Z-25-CR	284D-FVE6P6D-25-CR	284D-FVE6P6B-25-CR

IP67/NEMA Type 4 with conduit entrance, ArmorPoint communications, Sensorless Vector Control, and Volts per Hertz torque performance, Up to 575V AC

Input Voltage	3-Phase kW Rating	3-Phase Hp Rating	Output Current	24V DC Control Voltage Cat. No.	120V AC Control Voltage Cat. No.	240V AC Control Voltage Cat. No.
200…240V, 50/60 Hz 3-Phase	0.4	0.5	2.3	284A-FVB2P3Z-10-CR	284A-FVB2P3D-10-CR	284A-FVB2P3B-10-CR
	0.75	1	5	284A-FVB5P0Z-10-CR	284A-FVB5P0D-10-CR	284A-FVB5P0B-10-CR
	1.5	2	7.6	284A-FVB7P6Z-25-CR	284A-FVB7P6D-25-CR	284A-FVB7P6B-25-CR
380…480V, 50/60 Hz 3-Phase	0.4	0.5	1.4	284A-FVD1P4Z-10-CR	284A-FVD1P4D-10-CR	284A-FVD1P4B-10-CR
	0.75	1	2.3	284A-FVD2P3Z-10-CR	284A-FVD2P3D-10-CR	284A-FVD2P3B-10-CR
	1.5	2	4	284A-FVD4P0Z-10-CR	284A-FVD4P0D-10-CR	284A-FVD4P0B-10-CR
	2.2	3	6	284A-FVD6P0Z-25-CR	284A-FVD6P0D-25-CR	284A-FVD6P0B-25-CR
	3	5	7.6	284A-FVD7P6Z-25-CR	284A-FVD7P6D-25-CR	284A-FVD7P6B-25-CR
460…600V, 50/60 Hz 3-Phase	0.75	1	1.7	284A-FVE1P7Z-10-CR	284A-FVE1P7D-10-CR	284A-FVE1P7B-10-CR
	1.5	2	3	284A-FVE3P0Z-10-CR	284A-FVE3P0D-10-CR	284A-FVE3P0B-10-CR
	2.2	3	4.2	284A-FVE4P2Z-10-CR	284A-FVE4P2D-10-CR	284A-FVE4P2B-10-CR
	4	5	6.1	284A-FVE6P6Z-25-CR	284A-FVE6P6D-25-CR	284A-FVE6P6B-25-CR

IP67/NEMA Type 4 with quick disconnects for ArmorConnect power media, DeviceNet communications, Sensorless Vector Control, and Volts per Hertz torque performance, Up to 575V AC

Input Voltage	3-Phase kW Rating	3-Phase Hp Rating	Output Current	24V DC Control Voltage Cat. No.	120V AC Control Voltage Cat. No.	240V AC Control Voltage Cat. No.
200…240V, 50/60 Hz 3-Phase	0.4	0.5	2.3	284D-FVB2P3Z-10-RR	284D-FVB2P3D-10-RR	284D-FVB2P3B-10-RR
	0.75	1	5	284D-FVB5P0Z-10-RR	284D-FVB5P0D-10-RR	284D-FVB5P0B-10-RR
	1.5	2	7.6	284D-FVB7P6Z-25-RR	284D-FVB7P6D-25-RR	284D-FVB7P6B-25-RR
380…480V, 50/60 Hz 3-Phase	0.4	0.5	1.4	284D-FVD1P4Z-10-RR	284D-FVD1P4D-10-RR	284D-FVD1P4B-10-RR
	0.75	1	2.3	284D-FVD2P3Z-10-RR	284D-FVD2P3D-10-RR	284D-FVD2P3B-10-RR
	1.5	2	4	284D-FVD4P0Z-10-RR	284D-FVD4P0D-10-RR	284D-FVD4P0B-10-RR
	2.2	3	6	284D-FVD6P0Z-25-RR	284D-FVD6P0D-25-RR	284D-FVD6P0B-25-RR
	3	5	7.6	284D-FVD7P6Z-25-RR	284D-FVD7P6D-25-RR	284D-FVD7P6B-25-RR
460…600V, 50/60 Hz 3-Phase	0.75	1	1.7	284D-FVE1P7Z-10-RR	284D-FVE1P7D-10-RR	284D-FVE1P7B-10-RR
	1.5	2	3	284D-FVE3P0Z-10-RR	284D-FVE3P0D-10-RR	284D-FVE3P0B-10-RR
	2.2	3	4.2	284D-FVE4P2Z-10-RR	284D-FVE4P2D-10-RR	284D-FVE4P2B-10-RR
	4	5	6.1	284D-FVE6P6Z-25-RR	284D-FVE6P6D-25-RR	284D-FVE6P6B-25-RR

IP67/NEMA Type 4 with quick disconnects for ArmorConnect power media, ArmorPoint communications, Sensorless Vector Control, and Volts per Hertz torque performance, Up to 575V AC

Input Voltage	3-Phase kW Rating	3-Phase Hp Rating	Output Current	24V DC Control Voltage Cat. No.	120V AC Control Voltage Cat. No.	240V AC Control Voltage Cat. No.
200…240V, 50/60 Hz 3-Phase	0.4	0.5	2.3	284A-FVB2P3Z-10-RR	284A-FVB2P3D-10-RR	284A-FVB2P3B-10-RR
	0.75	1	5	284A-FVB5P0Z-10-RR	284A-FVB5P0D-10-RR	284A-FVB5P0B-10-RR
	1.5	2	7.6	284A-FVB7P6Z-25-RR	284A-FVB7P6D-25-RR	284A-FVB7P6B-25-RR
380…480V, 50/60 Hz 3-Phase	0.4	0.5	1.4	284A-FVD1P4Z-10-RR	284A-FVD1P4D-10-RR	284A-FVD1P4B-10-RR
	0.75	1	2.3	284A-FVD2P3Z-10-RR	284A-FVD2P3D-10-RR	284A-FVD2P3B-10-RR
	1.5	2	4	284A-FVD4P0Z-10-RR	284A-FVD4P0D-10-RR	284A-FVD4P0B-10-RR
	2.2	3	6	284A-FVD6P0Z-25-RR	284A-FVD6P0D-25-RR	284A-FVD6P0B-25-RR
	3	5	7.6	284A-FVD7P6Z-25-RR	284A-FVD7P6D-25-RR	284A-FVD7P6B-25-RR
460…600V, 50/60 Hz 3-Phase	0.75	1	1.7	284A-FVE1P7Z-10-RR	284A-FVE1P7D-10-RR	284A-FVE1P7B-10-RR
	1.5	2	3	284A-FVE3P0Z-10-RR	284A-FVE3P0D-10-RR	284A-FVE3P0B-10-RR
	2.2	3	4.2	284A-FVE4P2Z-10-RR	284A-FVE4P2D-10-RR	284A-FVE4P2B-10-RR
	4	5	6.1	284A-FVE6P6Z-25-RR	284A-FVE6P6D-25-RR	284A-FVE6P6B-25-RR

NEMA Type 4X with conduit entrance, DeviceNet communications, Sensorless Vector Control, and Volts per Hertz torque performance, Up to 575V AC

Input Voltage	3-Phase kW Rating	3-Phase Hp Rating	Output Current	24V DC Control Voltage Cat. No.	120V AC Control Voltage Cat. No.	240V AC Control Voltage Cat. No.
200…240V, 50/60 Hz 3-Phase	0.4	0.5	2.3	284D-SVB2P3Z-10-CR	284D-SVB2P3D-10-CR	284D-SVB2P3B-10-CR
	0.75	1	5	284D-SVB5P0Z-10-CR	284D-SVB5P0D-10-CR	284D-SVB5P0B-10-CR
	1.5	2	7.6	284D-SVB7P6Z-25-CR	284D-SVB7P6D-25-CR	284D-SVB7P6B-25-CR
380…480V, 50/60 Hz 3-Phase	0.4	0.5	1.4	284D-SVD1P4Z-10-CR	284D-SVD1P4D-10-CR	284D-SVD1P4B-10-CR
	0.75	1	2.3	284D-SVD2P3Z-10-CR	284D-SVD2P3D-10-CR	284D-SVD2P3B-10-CR
	1.5	2	4	284D-SVD4P0Z-10-CR	284D-SVD4P0D-10-CR	284D-SVD4P0B-10-CR
	2.2	3	6	284D-SVD6P0Z-25-CR	284D-SVD6P0D-25-CR	284D-SVD6P0B-25-CR
	3	5	7.6	284D-SVD7P6Z-25-CR	284D-SVD7P6D-25-CR	284D-SVD7P6B-25-CR
460…600V, 50/60 Hz 3-Phase	0.75	1	1.7	284D-SVE1P7Z-10-CR	284D-SVE1P7D-10-CR	284D-SVE1P7B-10-CR
	1.5	2	3	284D-SVE3P0Z-10-CR	284D-SVE3P0D-10-CR	284D-SVE3P0B-10-CR
	2.2	3	4.2	284D-SVE4P2Z-10-CR	284D-SVE4P2D-10-CR	284D-SVE4P2B-10-CR
	4	5	6.1	284D-SVE6P6Z-25-CR	284D-SVE6P6D-25-CR	284D-SVE6P6B-25-CR

NEMA Type 4X with quick disconnects for ArmorConnect power media, DeviceNet communications, Sensorless Vector Control, and Volts per Hertz torque performance, Up to 575V AC

Input Voltage	3-Phase kW Rating	3-Phase Hp Rating	Output Current	24V DC Control Voltage Cat. No.	120V AC Control Voltage Cat. No.	240V AC Control Voltage Cat. No.
200…240V, 50/60 Hz 3-Phase	0.4	0.5	2.3	284D-SVB2P3Z-10-RR	284D-SVB2P3D-10-RR	284D-SVB2P3B-10-RR
	0.75	1	5	284D-SVB5P0Z-10-RR	284D-SVB5P0D-10-RR	284D-SVB5P0B-10-RR
	1.5	2	7.6	284D-SVB7P6Z-25-RR	284D-SVB7P6D-25-RR	284D-SVB7P6B-25-RR
380…480V, 50/60 Hz 3-Phase	0.4	0.5	1.4	284D-SVD1P4Z-10-RR	284D-SVD1P4D-10-RR	284D-SVD1P4B-10-RR
	0.75	1	2.3	284D-SVD2P3Z-10-RR	284D-SVD2P3D-10-RR	284D-SVD2P3B-10-RR
	1.5	2	4	284D-SVD4P0Z-10-RR	284D-SVD4P0D-10-RR	284D-SVD4P0B-10-RR
	2.2	3	6	284D-SVD6P0Z-25-RR	284D-SVD6P0D-25-RR	284D-SVD6P0B-25-RR
	3	5	7.6	284D-SVD7P6Z-25-RR	284D-SVD7P6D-25-RR	284D-SVD7P6B-25-RR
460…600V, 50/60 Hz 3-Phase	0.75	1	1.7	284D-SVE1P7Z-10-RR	284D-SVE1P7D-10-RR	284D-SVE1P7B-10-RR
	1.5	2	3	284D-SVE3P0Z-10-RR	284D-SVE3P0D-10-RR	284D-SVE3P0B-10-RR
	2.2	3	4.2	284D-SVE4P2Z-10-RR	284D-SVE4P2D-10-RR	284D-SVE4P2B-10-RR
	4	5	6.1	284D-SVE6P6Z-25-RR	284D-SVE6P6D-25-RR	284D-SVE6P6B-25-RR

Options – Factory Installed

Description				Cat. No. Modification
	Hand/Off/Auto Selector Keypad			-3
	Safety Monitor			-SM
	EMI Filter			-EMI
	Output Contactor			-OC
	Shielded motor cable		**Enclosure Rating**	-CRN
			IP67	
			NEMA Type 4X	
	Supplied without motor cable		IP67	-CRW
			NEMA Type 4X	
	Supplied with control brake cable		IP67	-CB
			NEMA Type 4X	
	Supplied without control brake cable		IP67	-CBW
			NEMA Type 4X	
	Supplied with source brake cable		IP67	-SB
			NEMA Type 4X	
	Supplied without source brake cable		IP67	-SBW
			NEMA Type 4X	
	0…10 Analog Input		IP67	-A10
			NEMA Type 4X	
	Dynamic Brake Connector		IP67	-DB
			NEMA Type 4X	
	Connectivity to ArmorConnect Power Media supplied with shielded motor cable	**Short Circuit Protection Rating**	**Enclosure Rating**	-RRN
		10 A	IP67	
			NEMA Type 4X	
		25 A	IP67	
			NEMA Type 4X	
	Connectivity to ArmorConnect Power Media supplied without motor cable	10 A	IP67	-RRW
			NEMA Type 4X	
		25 A	IP67	
			NEMA Type 4X	

Sealing Caps

Description	For Use With	Cat. No.
Plastic Sealing Cap (M12)∗	Input I/O Connection	1485A-M12
AC Micro Aluminum Sealing Cap - External∗	Output I/O Connection	889A-RMCAP
Stainless Steel Sealing Cap (M12)❄	Input I/O Connection	1485AS-C3
Stainless Steel Sealing Cap (M12)❄	Output I/O Connection	889AS-RMCAP

∗ To achieve IP67 rating, sealing caps must be installed on all unused I/O connections.
❄ To achieve IP69K/NEMA 4X rating, sealing caps must be installed on all unused I/O connections.

Cables

Description	Cable Rating	Length [m (ft)]	Cat. No.
Extended Motor Cable Cordsets			
90° M22 Motor Cordset	IP67/NEMA Type 4	6 (19.6)	280-MTR22-M6
		14 (45.9)	280-MTR22-M14
90° M22 Motor Cordset	IP69K	6 (19.6)	280S-MTR22-M6
		14 (45.9)	280S-MTR22-M14
Motor Cable Patchcords			
90° Male/Straight Female M22	IP67/NEMA Type 4	1 (3.3)	280-MTR22-M1D
		3 (9.8)	280-MTR22-M3D
90° Male/Straight Female M22	IP69K	1 (3.3)	280S-MTR22-M1D
		3 (9.8)	280S-MTR22-M3D
Shielded Motor Cable Cordsets			
90° M22 Motor Cordset	IP67/NEMA Type 4	6 (19.6)	284-MTRS22-M6
90° M22 Motor Cordset	IP67/NEMA Type 4	14 (45.9)	284-MTRS22-M14
90° M22 Motor Cordset	IP69K	6 (19.6)	284S-MTRS22-M6
90° M22 Motor Cordset	IP69K	14 (45.9)	284S-MTRS22-M14
Shielded Motor Cable Patchcords			
90° Male/Straight Female M22	IP67/NEMA Type 4	1 (3.3)	284-MTRS22-M1D
90° Male/Straight Female M22	IP67/NEMA Type 4	3 (9.8)	284-MTRS22-M3D
90° Male/Straight Female M22	IP69K	1 (3.3)	284S-MTRS22-M1D
90° Male/Straight Female M22	IP69K	3 (9.8)	284S-MTRS22-M3D
Extended Brake Cable Cordsets			
90° M25 Source Brake Cable	IP67/NEMA Type 4	6 (19.6)	285-BRC25-M6
90° M25 Source Brake Cable	IP67/NEMA Type 4	14 (45.9)	285-BRC25-M14
90° M25 Source Brake Cable	IP69K	6 (19.6)	285S-BRC25-M6
90° M25 Source Brake Cable	IP69K	14 (45.9)	285S-BRC25-M14

ArmorPoint® Media §

Description	Length [m (ft)]	Cat. No.
ArmorPoint Bus Extension Cable including Terminating Resistor	1 (3.3)	280A-EXT1
Extension Cable to connect two ArmorStart Distributed Motor Controllers to ArmorPoint communication protocol	1 (3.3)	280A-EXTCABLE

§ ArmorPoint media is only available with an IP67/NEMA Type 4 rating.

DeviceNet Media ♣

Description		Length [m (ft)]	Cat. No.
			Sealed
	KwikLink pigtail drops are Insulation Displacement Connector (IDC) with integral Class 1 round cables for interfacing devices or power supplies to flat cable	1 (3.3)	1485P-P1E4-B1-N5
		2 (6.5)	1485P-P1E4-B2-N5
		3 (9.8)	1485P-P1E4-B3-N5
		6 (19.8)	1485P-P1E4-B6-N5
	DeviceNet Mini- T-Port Tap	Left Keyway	1485P-P1N5-MN5KM
		Right Keyway	1485P-P1N5-MN5NF
Description		**Connector**	**Cat. No.**
	Gray PVC Thin Cable	Mini Straight Female Mini Straight Male	1485G-P❄N5-M5
		Mini Straight Female Mini Right Angle Male	1485G-P❄W5-N5
		Mini Right Angle Female Mini Straight Male	1485G-P❄M5-Z5
		Mini Right Angle Female Mini Straight Male	1485G-P❄W5-Z5
	Thick Cable	Mini Straight Female Mini Straight Male	1485C-P‡N5-M5
		Mini Straight Female Mini Right Angle Male	1485C-P‡W5-N5
		Mini Right Angle Female Mini Straight Male	1485C-P‡M5-Z5
		Mini Right Angle Female Mini Straight Male	1485C-P‡W5-Z5
Description		**Length m (ft)**	**Cat. No.**
	DeviceNet Configuration Terminal Used to interface with objects on a DeviceNet network. Includes 1 m communications cable.	1 (3.3)	193-DNCT
	Communication cable, color-coded bare leads	1 (3.3)	193-CB1
	Communication cable, microconnector (male)	1 (3.3)	193-CM1
	Panel Mount Adapter/Door Mount Bezel Kit	—	193-DNCT-BZ1

♣ See publication M116-CA001_-EN-P for complete cable selection information.
❄ Replace symbol with desired length in meters (Example: **1485G-P1N5-M5** for a 1 m cable). Standard cable lengths: 1, 2, 3, 4, 5, and 6 m.
‡1Replace symbol with desired length in meters (Example: **1485C-P1N5-M5** for a 1 m cable). Standard cable lengths: 1, 2, 3, 4, 5, 6, 8, 10, 12, 18, 24, and 30 m.

Sensor Media ⌘

Description		ArmorStart I/O Connection	Pin Count	Connector	Cat. No.
	DC Micro Patchcord	Input	5-pin	Straight Female Straight Male	889D-F4ACDM-➢
				Straight Female Right Angle Male	889D-F4ACDE-➢
	DC Micro V-Cable	Input	5-pin	Straight Female	879D-F4ACDM-➢
				Right Angle Male	879D-R4ACM-➢
	AC Micro Patchcord	Output	3-pin	Straight Female Straight Male	889R-F3AERM-➢
				Straight Female Right Angle Male	889R-F3AERE-➢

⌘ See publication M116-CA001_-EN-P for complete cable selection information.
➢ Replace symbol with desired length in meters (Example: 889D-F4ACDM-1 for a 1 m cable). Standard cable lengths: 1, 2, 5, and 10 m.
Note: Stainless steel versions may be ordered by adding an "S" to the cat. no. (Example: 889DS-F4ACDM-1).

Dynamic Brake Modules ✦

Drive Ratings				
Input Voltage	kW	Hp	Min. Resistance [Ω]	Cat. No. ♣
240V, 50/60 Hz, 3-Phase	0.4	0.5	48	AK-R2-091P500
	0.75	1.0	48	AK-R2-091P500
	1.5	2.0	48	AK-R2-091P500
	2.2	3.0	32	AK-R2-047P500
	3.7	5.0	32	AK-R2-047P500
480V, 50/60 Hz, 3-Phase	0.4	0.5	97	AK-R2-360P500
	0.75	1.0	97	AK-R2-360P500
	1.5	2.0	97	AK-R2-360P500
	2.2	3.0	77	AK-R2-120P1K2
	4.0	5.0	77	AK-R2-120P1K2

♣ The resistors listed in this table are rated for 5% duty cycle.
✦ Dynamic brake modules have an IP00 rating.

IP67 Dynamic Brake Resistor

Drive and Motor Size [kW (Hp)]	Resistance [Ω]∗	Continuous Power [kW]	Max. Energy [kJ]	Max. Braking Torque [% of motor]	Application Type 1❄		Application Type 2❄		Cat. No.
					Braking Torque [% of motor]	Duty Cycle‡	Braking Torque [% of motor]	Duty Cycle‡	
200…240V AC Input Drives									
0.37 (0.5)	91	0.086	17	293%	100%	48%	150%	31%	284R-091P500
0.75 (1)				218%		23%	150%	15%	284R-091P500
1.5 (2)				109%		11%	109%	11%	284R-091P500
400…480V AC Input Drives									
0.37 (0.5)	360	0.086	17	306%	100%	47%	150%	31%	284R-360P500
0.75 (1)	360	0.086	17	220%		23%	150%	15%	284R-360P500
1.5 (2)	360	0.086	17	110%		12%	110%	11%	284R-360P500
2.2 (4)	120	0.26	52	197%		24%	150%	16%	284R-120P1K2
4 (5)	120	0.26	52	124%		13%	124%	10%	284R-120P1K2
600V AC Input Drives									
0.37 (0.5)	360	0.086	17	274%	100%	46%	150%	31%	284R-360P500
0.75 (1)	360	0.086	17	251%		23%	150%	15%	284R-360P500
1.5 (2)	360	0.086	17	172%		11%	150%	8%	284R-360P500
2.2 (4)	120	0.26	52	193%		24%	150%	16%	284R-120P1K2
4 (5)	120	0.26	52	186%		13%	150%	9%	284R-120P1K2

∗ Check resistor ohms against the minimum resistance for the drive that is being used.
‡ The duty cycle listed is based on the full speed to zero deceleration. For constant regen at full speed, the duty cycle capability is half the values listed.
❄ Application Type 1 represents maximum capability up to 100% of braking torque, where possible. Application Type 2 represents greater than 100% of braking torque up to a maximum of 150%, where possible.

Peer-to-Peer Communications

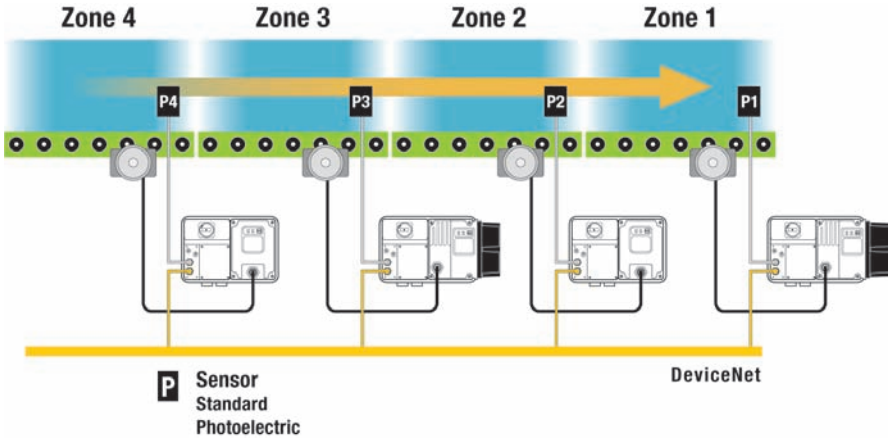

The Zone Control capabilities of ArmorStart Distributed Motor Controller is ideal for large horsepower (0.5…10 Hp) motored conveyors. The ArmorStart Distributed Motor Controllers have built-in DeviceNet Communications, DeviceLogix technology, and the added Zone Interlocking Parameters (ZIP) which allows one ArmorStart to consume data directly from up to four other DeviceNet nodes without going through the network scanner. These direct communications between conveyor zones are beneficial in a merge, diverter, and accumulation conveyor applications.

ArmorStart to ArmorPoint Connectivity - (Networks other than DeviceNet)

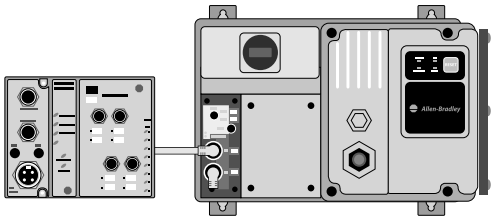

When connecting to the Bulletin 1738 ArmorPoint Distributed I/O product, a network adapter and at least one ArmorPoint Digital Output, Digital Input, Analog, AC and Relay product, or Specialty product must be selected. The ArmorPoint Distributed I/O can accomodate up to 63 modules per network node. The cable that connects the ArmorPoint Distributed I/O product to the ArmorStart Distributed Motor Controller is the Bulletin 280A-EXT1. The 280A-EXT1 includes an ArmorPoint bus extension cable and a network terminating resistor.

Note: Access to DeviceLogix programming is available with RSNetworx for DeviceNet.

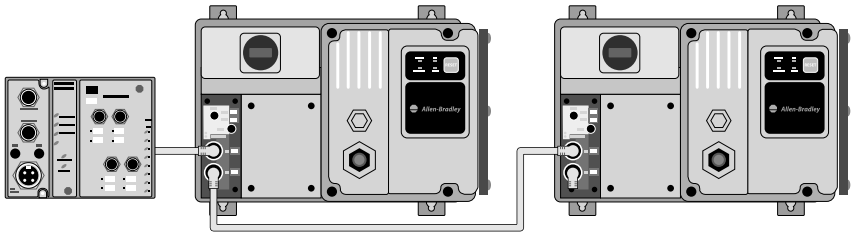

If an additional ArmorStart Distributed Motor Controller is to be connected, the Bulletin 280A-EXTCABLE will be required. A maximum of two ArmorStart Distributed Motor Controllers can be connected to the Bulletin 1738 Distributed I/O.

I/O Expansion with DeviceNet

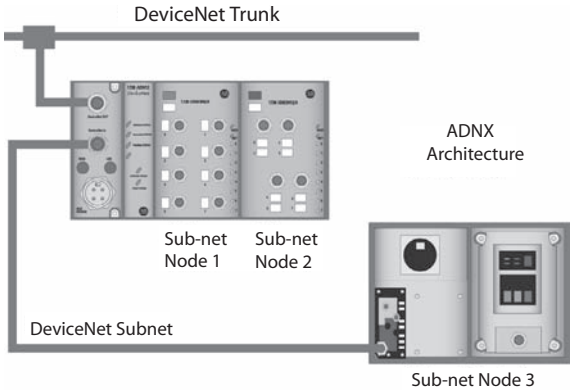

If the I/O capability of the Bulletin 280/281D ArmorStart Distributed Motor Controller needs to be expanded beyond the standard four inputs and two outputs, the ArmorStart Distributed Motor Controller with the DeviceNet communication protocol can be configured to the ADNX Architecture, in which the ArmorStart is part of the DeviceNet subnet, using the Bulletin 1738-ADNX ArmorPoint Distributed I/O product.

Bulletin 1738 ArmorPoint Distributed I/O Products

Digital Output Products

Description	Cat. No.
24V DC, eight source output with eight M12 connectors	1738-OB8EM12
24V DC, eight source output with eight M8 connectors	1738-OB8EM8
24V DC, four source output with four M12 connectors	1738-OB4EM12
24V DC, four source output with four M8 connectors	1738-OB4EM8
24V DC, two source output with two M12 connectors	1738-OB2EM12
24V DC, two source output, 2 A prot. with two M12 connectors	1738-OB2EPM12
24V DC, four sink output with four M12 connectors	1738-OV4EM12

Digital Input Products

Description	Cat. No.
24V DC, eight sink input with four M12 connectors, two points per connector	1738-IB8M12
24V DC, eight sink input with eight M8 connectors	1738-IB8M8
24V DC, eight sink input with one M23 connector	1738-IB8M23
24V DC, four sink input with four M12 connectors	1738-IB4M12
24V DC, four sink input with four M8 connectors	1738-IB4M8
24V DC, two sink input with two M12 connectors	1738-IB2M12
24V DC, four source input with four M12 connectors	1738-IV4M12

Analog Products

Description	Cat. No.
24V DC analog current input with two M12 connectors	1738-IE2CM12
24V DC analog voltage input with two M12 connectors	1738-IE2VM12
24V DC analog current output with two M12 connectors	1738-OE2CM12
24V DC analog voltage output with two M12 connectors	1738-OE2VM12
24V DC, two thermocouple input	1738-IT2IM12
24V DC, two RTD input	1738-IR2M12

Power Supply Products

Description	Cat. No.
ArmorPoint I/O Field Potential Distributor Module	1738-FPD
24V DC Expansion Power Supply	1738-EP24DC

AC and Relay Products

Description	Cat. No.
24V DC Coil, N.O. DPST relay with two M12 connectors	1738-OW4M12
24V DC Coil, N.O. DPST relay with two AC M12 connectors	1738-OW4M12AC
120V AC, two input with two AC 4-pin M12 connectors	1738-IA2M12AC4
120V AC, two input with two AC 3-pin M12 connectors	1738-IA2M12AC3
120/230V AC, two output with two AC 3-pin M12 connectors	1738-OA2M12AC3

Specialty Products

Description	Cat. No.
ArmorPoint I/O RS-232 ASCII Serial Interface Module	1738-232ASCM12
ArmorPoint I/O RS-485 ASCII Serial Interface Module	1738-485ASCM12
24V DC Very High Speed Counter Module	1738-VHSC24M23
ArmorPoint 5V Encoder/Counter Module	1738-IJM23
ArmorPoint Synchronous Serial Interface Module with Absolute Encoder	1738-SSIM23

Adapter Products

Description	Cat. No.
ArmorPoint DeviceNet Adapter Module, Drop or Pass-through, with male and female M12 connectors	1738-ADN12
ArmorPoint DeviceNet Adapter Module, Drop only, with male M18 connector	1738-ADN18
ArmorPoint DeviceNet Adapter Module, Drop or Pass-through, with male and female M18 connectors	1738-ADN18P
ArmorPoint DeviceNet 24V DC Adapter Module with subnet expansion	1738-ADNX
ArmorPoint Redundant ControlNet Adapter Module	1738-ACNR
ArmorPoint Ethernet/IP 10/100 Mbps Adapter Module	1738-AENT

Electrical Ratings		UL/NEMA	IEC
Power Circuit	Rated Operation Voltage	200…575V	200…500V
	Rate Insulation Voltage	600V	600V
	Rated Impulsed Voltage	6 kV	6 kV
	Dielectric Withstand	2200V AC	2500V AC
	Operating Frequency	50/60 Hz	50/60 Hz
	Utilization Category	N/A	AC-3
	Protection Against Shock	N/A	IP2X
Control Circuit	Rated Operation Voltage	24V DC (+10%, -15%) A2 (should be grounded at voltage source)	
		120V AC (+10%, -15%) A2 (should be grounded at voltage source)	
		240V AC (+10%, -15%) A2 (should be grounded at voltage source)	
	Rate Insulation Voltage	250V	250V
	Rated Impulsed Voltage	—	4 kV
	Dielectric Withstand	1500V AC	2000V AC
	Overvoltage Category	—	III
	Operating Frequency	50/60 Hz	

		Current Rating	Voltage	480Y/277V	480/480V	600Y/347V	600V
Short Circuit Protection	SCPD performance Type 1	10 A	Sym. Amps RMS	65 kA	65 kA	30 kA	30 kA
		25 A		30 kA	30 kA	30 kA	30 kA
	SCPD List	Size per NEC Group Motor			—		

Power Requirements										
	Units	No Options			Brake or Output Contactor			w/ Brake and Output Contactor		
Control Voltage	Volts	24V DC	120V AC	240V AC	24V DC	120V AC	240V AC	24V DC	120V AC	240V AC
Total Control VA (Pick Up)	VA (W)	(11 W)	16	24	(13 W)	38	46	(16 W)	60	68
Total Control VA (Hold In)	VA (W)	(11 W)	16	24	(13 W)	20	28	(16 W)	24	32
External Devices powered by Control Voltage										
Outputs (2) (1 A max. each)	Amps	2	2	2	2	2	2	2	2	2
Total Control VA (Pick Up) with max outputs	VA (W)	(59 W)	256	504	(61 W)	278	548	(64 W)	300	548
Total Control VA (Hold In) with max outputs	VA (W)	(59 W)	256	504	(61 W)	261	512	(64 W)	264	512

Input Ratings	Rated Operation Voltage	24V DC	
	Input On-State Voltage Range	10…26V DC	
	Input On-State Current	3.0 mA @ 10V DC	
		7.2 mA @ 24V DC	
	Input Off-State Voltage Range	0…5V DC	
	Input Off-State Current	<1.5 mA	
	Input Filter — Software Selectable		
	Off to On	Settable from 0…64 ms in 1 ms increments	
	On to Off	Settable from 0…64 ms in 1 ms increments	
	Input Compatibility	N/A	IEC 1+
	Number of Inputs	4	
	Sensor Source		
	Voltage Status Only	11…25V DC from DeviceNet	
	Current Available	50 mA max. per input, 200 mA total	
Output Ratings (Sourced from Control Circuit)	Rated Operation Voltage	240V AC/30V DC	240V AC/30V DC
	Rate Insulation Voltage	250V	250V
	Dielectric Withstand	1500V AC	2000V AC
	Operating Frequency	50/60 Hz	50/60 Hz
	Type of Control Circuit	Electromechanical relay	
	Type of Current	AC/DC	
	Conventional Thermal Current Ith	Total of both outputs ≤ 2 A	
	Type of Contacts	Normally open (N.O.)	
	Number of Contacts	2	
ArmorPoint Ratings	Backplane Current Load	400 mA	

		UL/NEMA	IEC
Environmental	Operating Temperature Range	-20…+40 °C (-4…+104 °F)	
	Storage and Transportation Temperature Range	–25….+85 °C (–13…+185 °F)	
	Altitude	1000 m	
	Humidity	5…95% (non-condensing)	
	Pollution Degree	3	
	Enclosure Ratings	NEMA 4/12/13	IP67
		NEMA 4X	IP69K
	Approximate Shipping Weight	13.6 kg (30 lb)	
Mechanical	**Resistance to Shock**		
	Operational	15 G	
	Non-Operational	30 G	
	Resistance to Vibration		
	Operational	1 G, 0.15 mm (0.006 in.) displacement	
	Non-Operational	2.5 G, 0.38 mm (0.015 in.) displacement	
	Wire Size	Primary/Secondary terminal: (16 …10 AWG)	Primary/Secondary terminal: 1.5…4.0 mm²
	Tightening Torque	Primary terminal: 10.8 lb•in Secondary terminal: 4.5 lb•in	Primary terminal: (1.2 N•m) Secondary terminal: (0.5 N•m)
	Wire Strip Length	0.35 in. (9 mm)	
	Control and Safety Monitor Inputs		
	Wire Size	(18…10 AWG)	1.0…4.0 mm²
	Tightening Torque	6.2 lb•in	0.7 N•m
	Wire Strip Length	0.35 in. (9 mm)	
Other Rating	**EMC Emission Levels**		
	Conducted Radio Frequency Emissions	Class A	
	Radiated Emissions	Class A	
	EMC Immunity Levels		
	Electrostatic Discharge	4 kV contact and 8 kV Air	
	Radio Frequency Electromagnetic Field	10V/m	
	Fast Transient	2 kV	
	Surge Transient	1 kV (12) $_{L-L}$, 2 kV (2) $_{L-N}$ (earth)	
	Overload Characteristics		
	Trip Class	10	
	Overload Protection	I^2t overload protection - 150% for 60 s, 200% for 30 s	
	Number of Poles	3	
	DeviceNet Specifications		
	DeviceNet Supply Voltage Rating	Range 11…25V DC, 24V DC nominal	
	DeviceNet Input Current	167 mA @ 24V DC - 4.0 W	
		364 mA @ 11V DC - 4.0 W	
	External Devices powered by DeviceNet	Sensors inputs 4 x 50 mA - total 200 mA	
	Total w/max Sensor Inputs (4)	367 mA @ 24V DC - 8.8 W	
	DeviceNet Input Current Surge	15 A for 250 µs	
	DeviceNet Communications		
	Baud Rates	125, 250, 500 kbps	
	Distance Maximum	500 m (1630 ft) @ 125 kbps	
		200 m (656 ft) @ 250 kbps	
		100 m (328 ft) @ 500 kbps	
	Certifications	cULus (File No. E207834) UL 508C EN/IEC 60947-1, EN 50178, EN 61800-3 CE Marked per Low Voltage Directive 73/23/EEC and EMC Directive 89/336/EEC	

External Connections for Input Connector

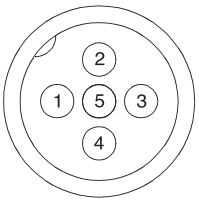

Pin 1: +V Out
Pin 2: Input
Pin 3: Comm
Pin 4: Input
Pin 5: NC (No Connection)

External Connections for Output Connector

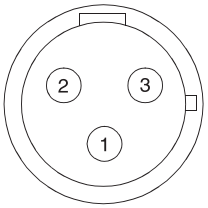

Pin 1: PE
Pin 2: Return
Pin 3: Relay Out

External Connections for Brake Contactor Connector

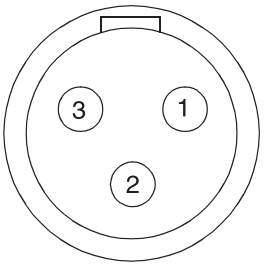

Pin 1: L1 - Black
Pin 2: GND - Green/Yellow
Pin 3: L2 - White

External Connections for Dynamic Brake Connection

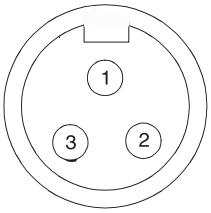

Pin 1: GND - Green/Yellow
Pin 2: BR+ - Black
Pin 3: BR- - White

External Connections for 0…10V Analog Input

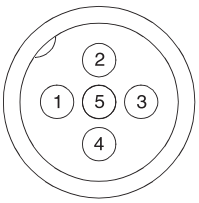

Pin 1: 10VDC
Pin 2: 0…10V Input
Pin 3: Analog Common
Pin 4: Analog Output
Pin 5: NC (No Connection)

External Connections for DeviceNet Connector

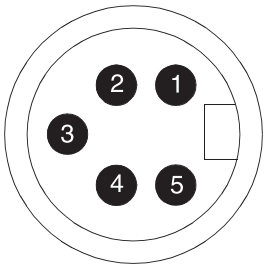

Pin 1: Drain (Not Connected)
Pin 2: +VDNET
Pin 3: -VDNET
Pin 4: CAN_H
Pin 5: CAN_L

External Connections for Motor Connector

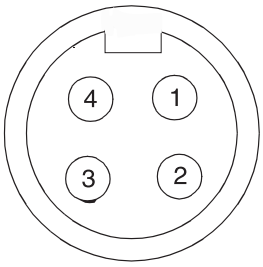

Pin 1: T1 - Black
Pin 2: T2 - White
Pin 3: T3 - Red
Pin 4: Ground - Green/Yellow

External Connections for ArmorPoint Interface (IN)

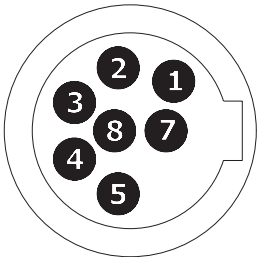

Pin 1: CAN High
Pin 2: Common
Pin 3: +5V
Pin 4: CAN Low
Pin 5: Enable In
Pin 7: Common
Pin 8: PE

External Connections for ArmorPoint Interface (OUT)

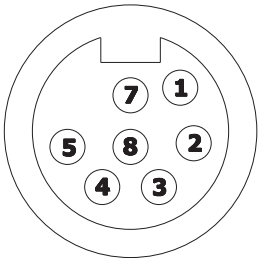

Pin 1: CAN High
Pin 2: Common
Pin 3: +5V
Pin 4: CAN Low
Pin 5: Enable Out
Pin 7: Common
Pin 8: NC (No Connection)

Overload Curves

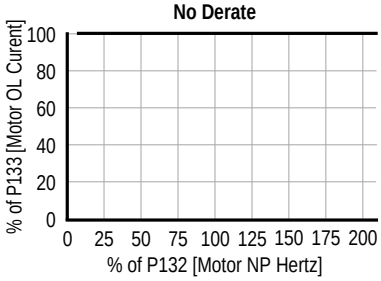

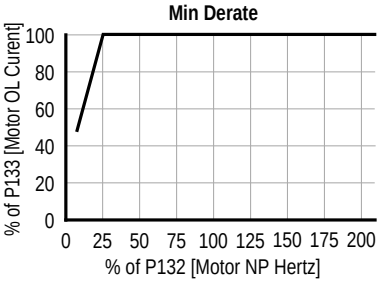

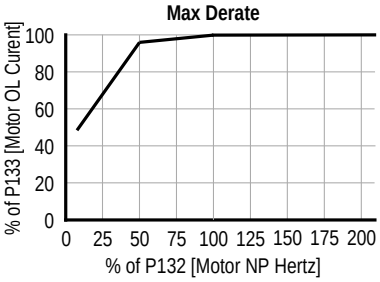

Dimensions in millimeters (inches). Dimensions are not intended to be used for manufacturing purposes. All dimensions are subject to change.

Dimensions for 1 Hp and below @ 230V AC, 2 Hp and below @ 460V AC, and 2 Hp and below @ 575V AC, IP67/NEMA Type 4 with Conduit Entrance

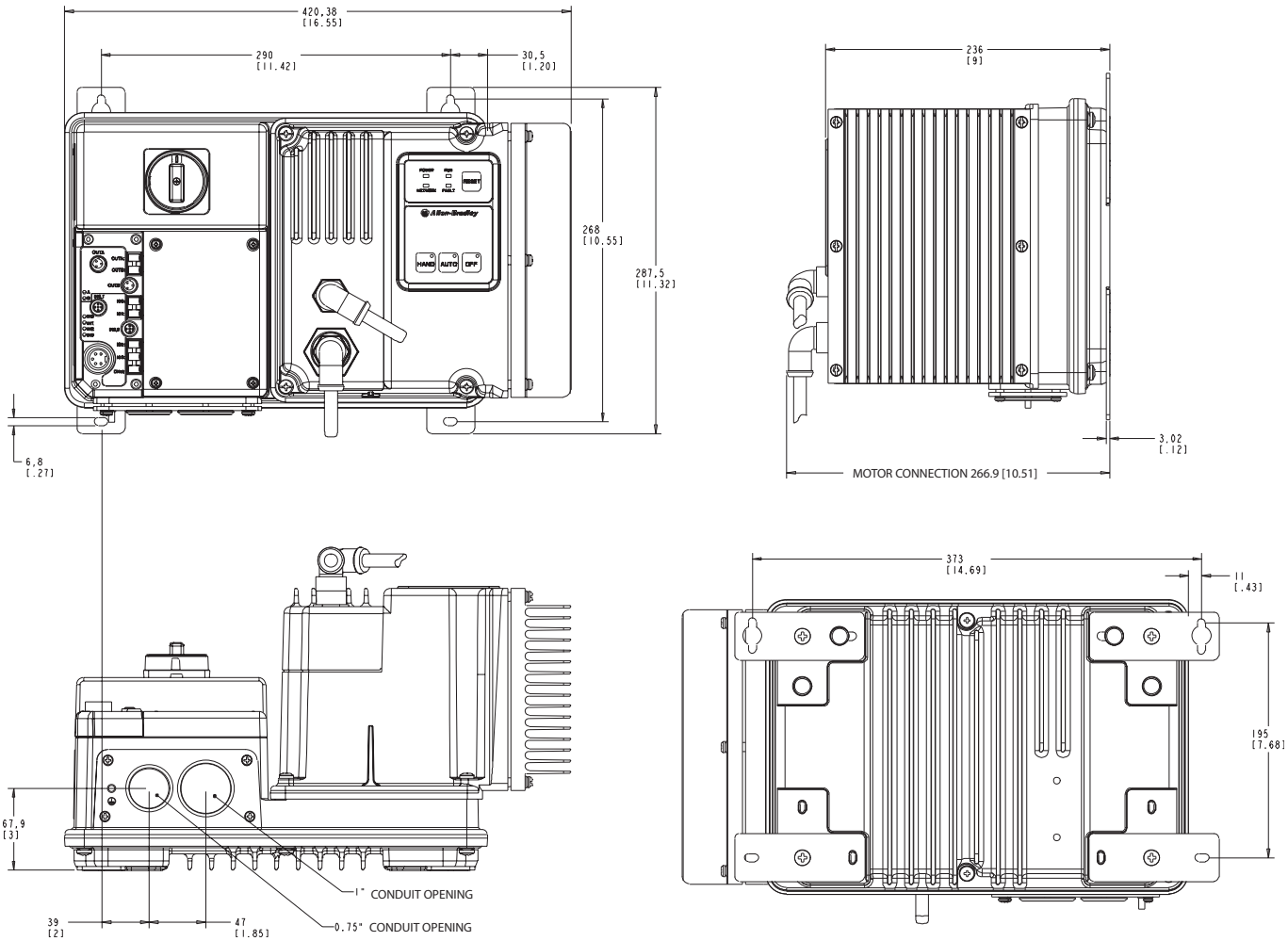

Dimensions in millimeters (inches). Dimensions are not intended to be used for manufacturing purposes. All dimensions are subject to change.

Dimensions for 1 Hp and below @ 230V AC, 2 Hp and below @ 460V AC, and 2 Hp and below @ 575V AC, IP67/NEMA Type 4 with ArmorConnect Connectivity

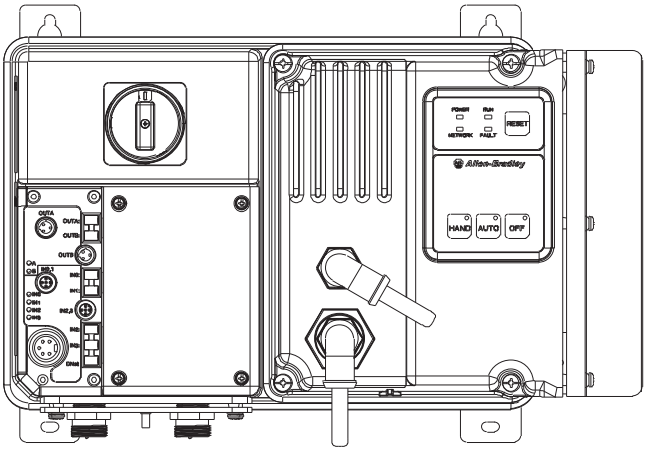

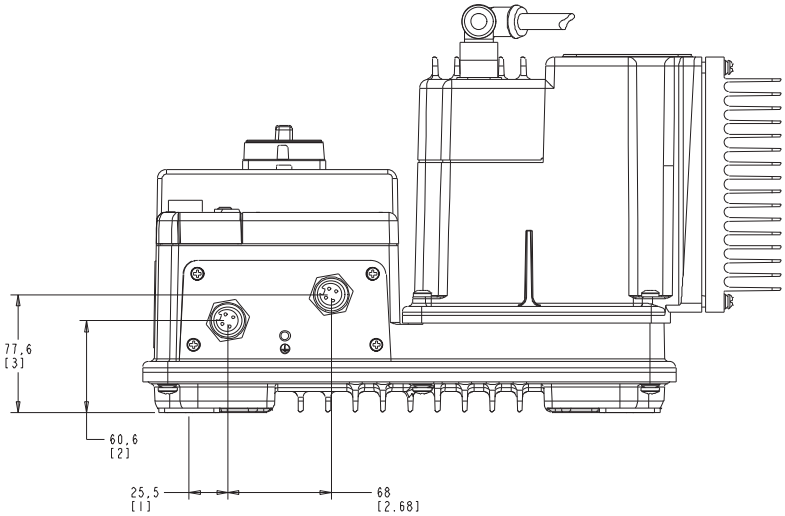

Dimensions in millimeters (inches). Dimensions are not intended to be used for manufacturing purposes. All dimensions are subject to change.

Dimensions for 2 Hp @ 230V AC, 3 Hp and above @ 460V AC, and 3 Hp and above @ 575V AC, IP67/NEMA Type 4 with Conduit Entrance

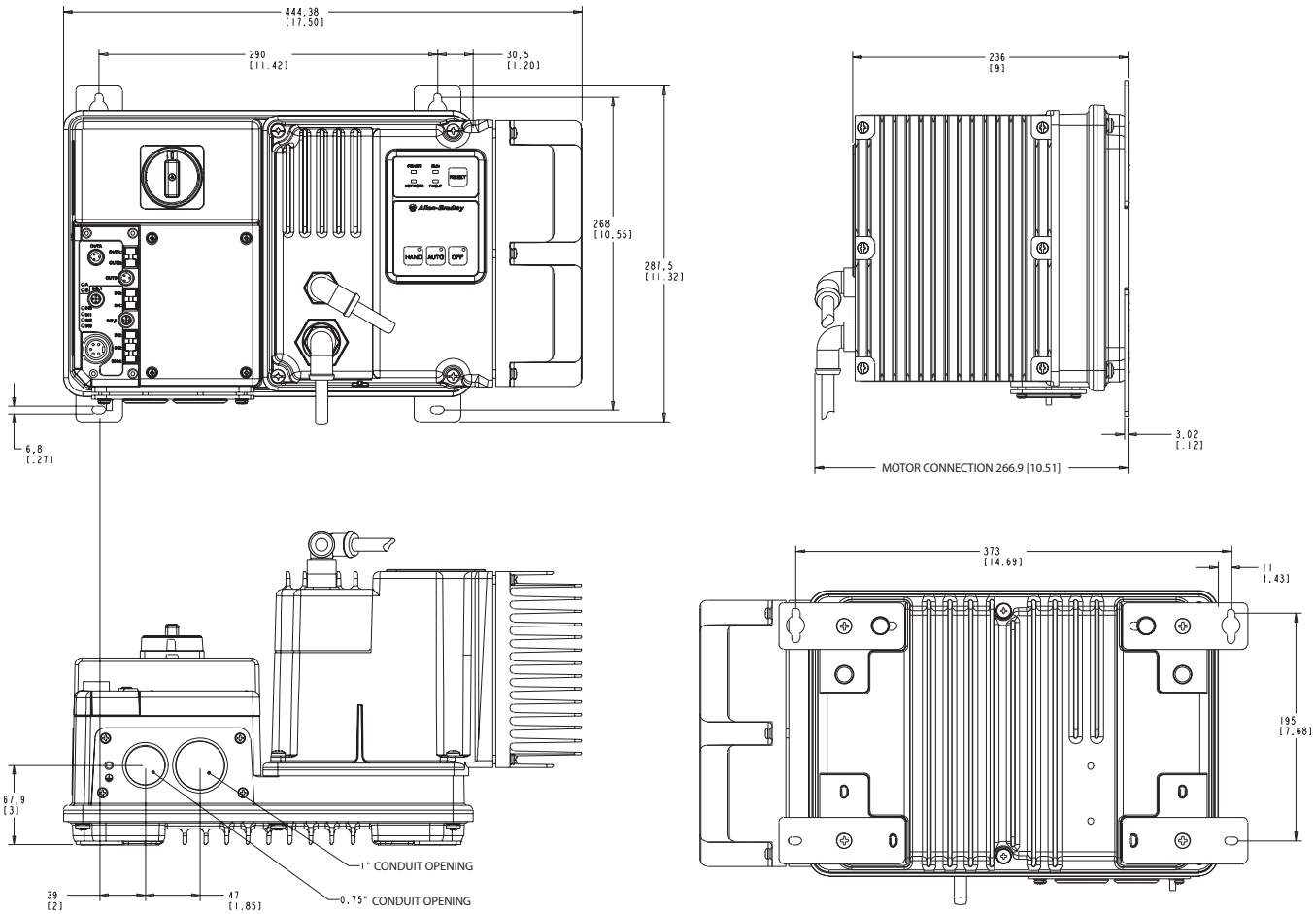

Dimensions in millimeters (inches). Dimensions are not intended to be used for manufacturing purposes. All dimensions are subject to change.

Dimensions for 2 Hp @ 230V AC, 3 Hp and above @ 460V AC, and 3 Hp and above @ 575V AC, IP67/NEMA Type 4 with ArmorConnect Connectivity

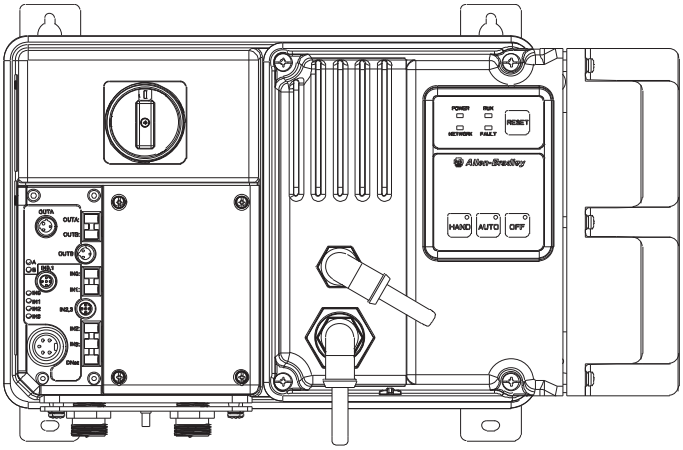

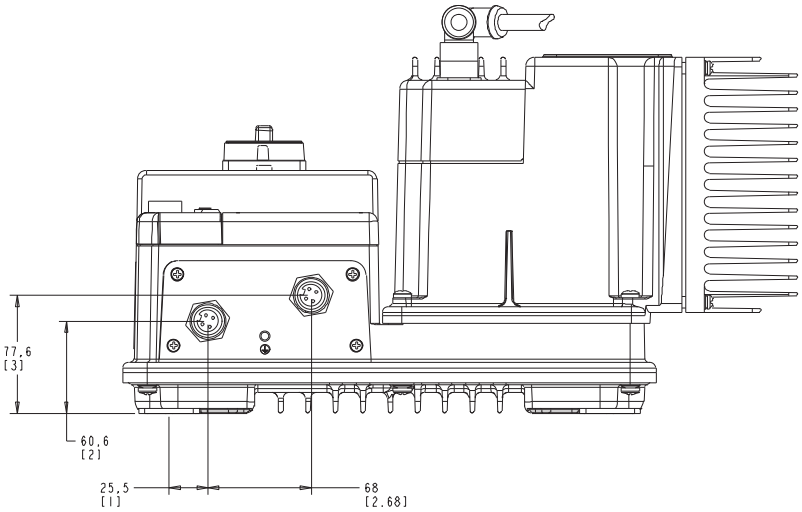

Dimensions in millimeters (inches). Dimensions are not intended to be used for manufacturing purposes. All dimensions are subject to change.

Dimensions for 1 Hp and below @ 230V AC, 2 Hp and below @ 460V AC, and 2 Hp and below @ 575V AC, NEMA Type 4X with Conduit Entrance

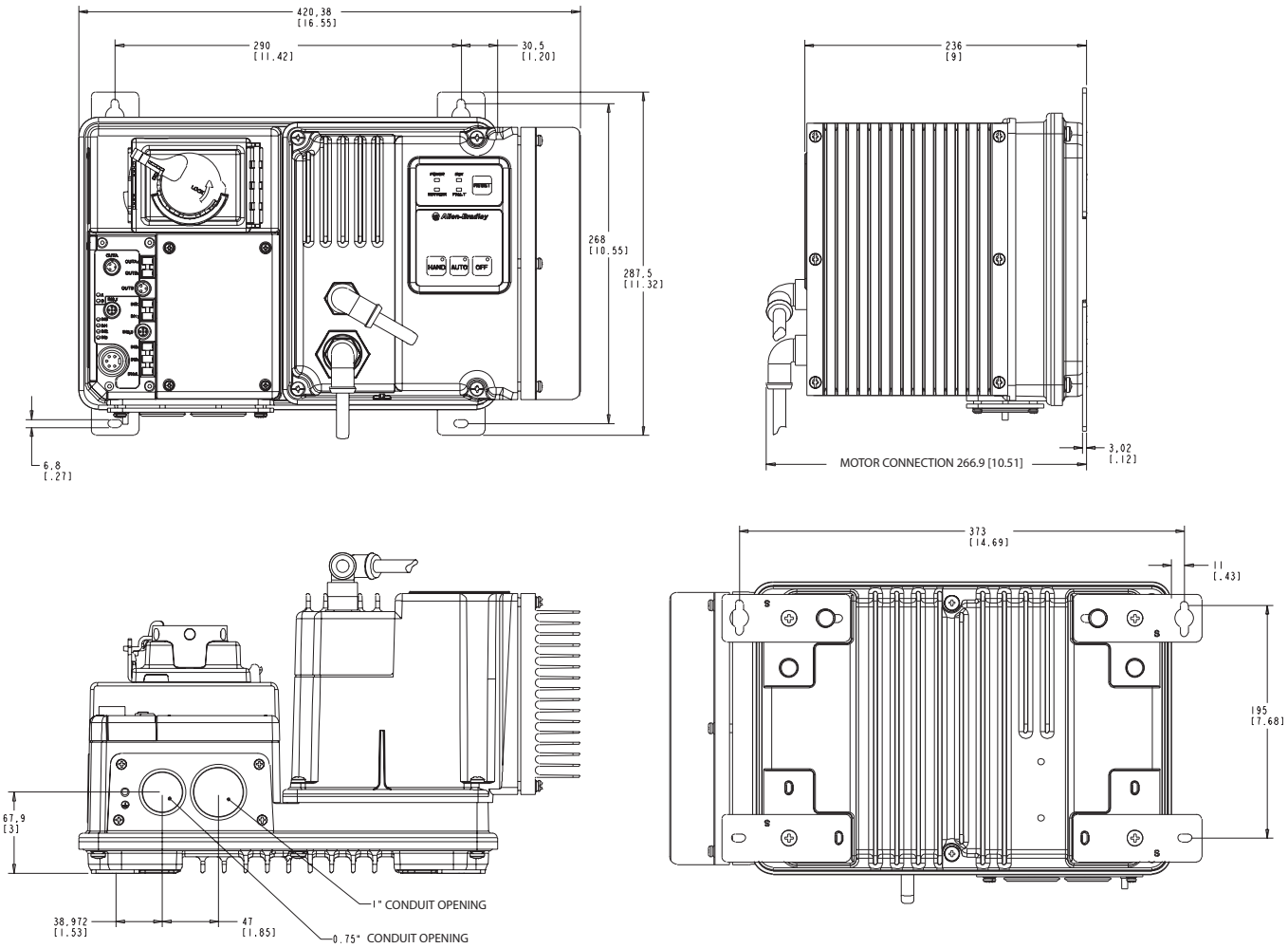

Dimensions in millimeters (inches). Dimensions are not intended to be used for manufacturing purposes. All dimensions are subject to change.

Dimensions for 1 Hp and below @ 230V AC, 2 Hp and below @ 460V AC, and 2 Hp and below @ 575V AC, NEMA Type 4X with ArmorConnect Connectivity

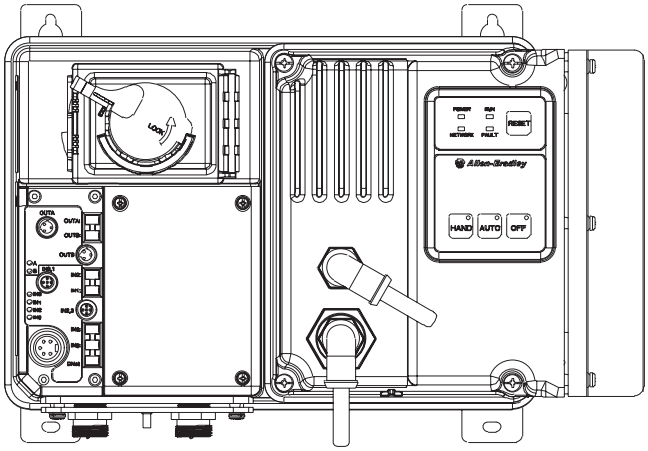

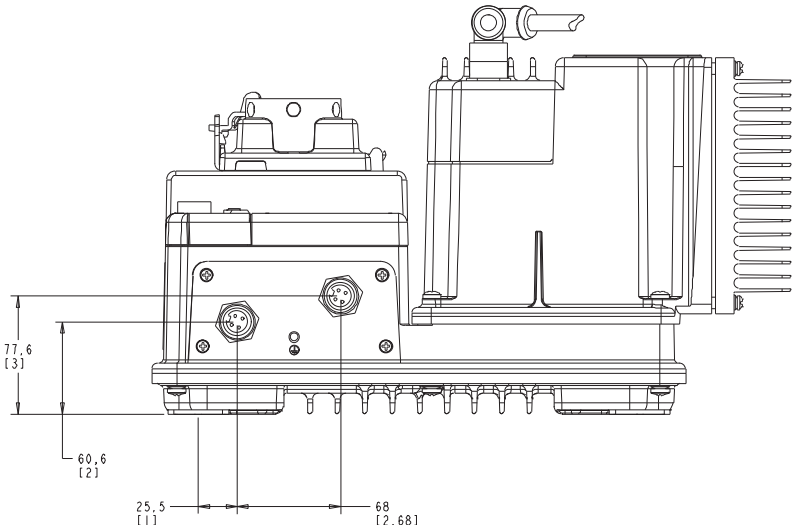

Dimensions in millimeters (inches). Dimensions are not intended to be used for manufacturing purposes. All dimensions are subject to change.

Dimensions for 2 Hp @ 230V AC, 3 Hp and above @ 460V AC, and 3 Hp and above @ 575V AC, NEMA Type 4X with Conduit Entrance

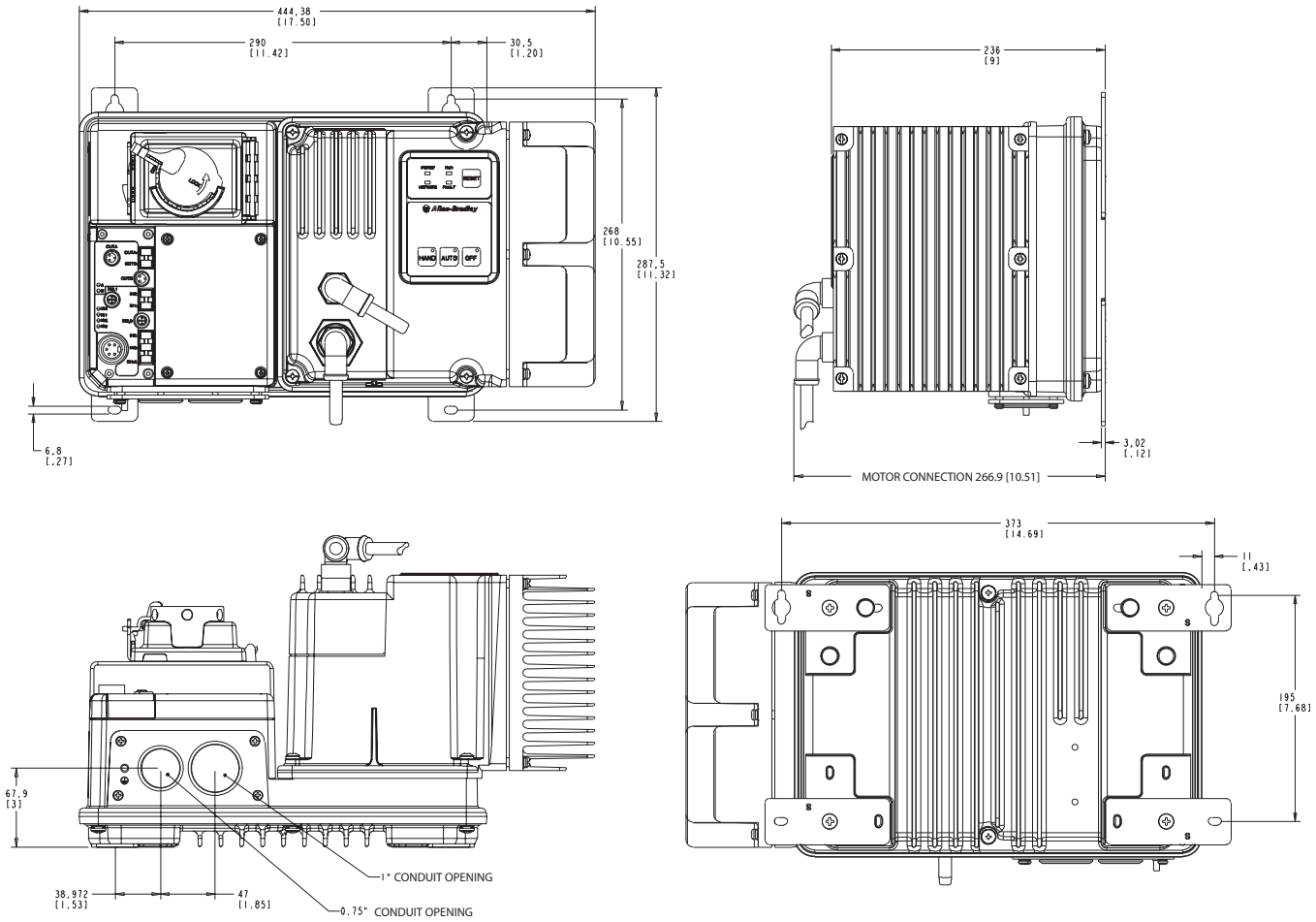

Dimensions in millimeters (inches). Dimensions are not intended to be used for manufacturing purposes. All dimensions are subject to change.

Dimensions for 2 Hp @ 230V AC, 3 Hp and above @ 460V AC, and 3 Hp and above @ 575V AC, NEMA Type 4X with ArmorConnect Connectivity

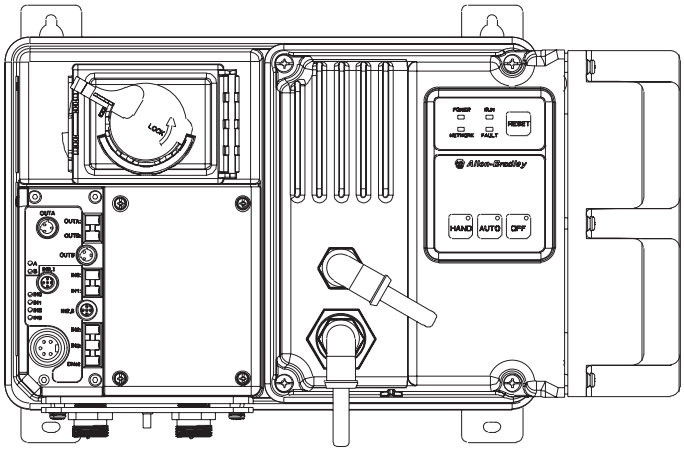

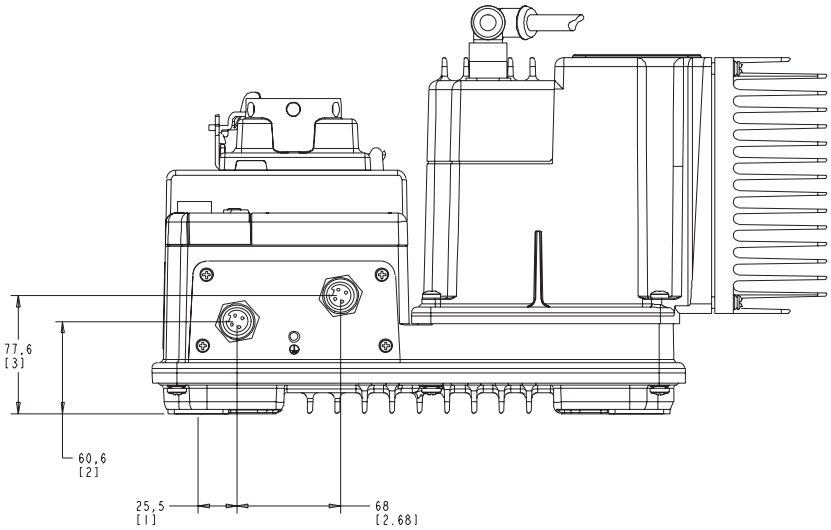

Dynamic Brake Modules

Dimensions are in millimeters (inches). Dimensions are not intended to be used for manufacturing purposes.

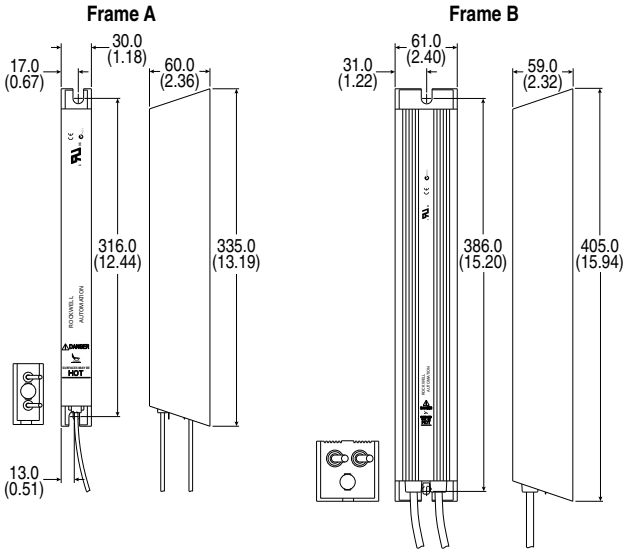

Frame	Cat. No.	Weight [kg (lb)]
A	AK-R2-091P500, AK-R2-047P500, AK-R2-360P500	1.1 (2.5)
B	AK-R2-030P1K2, AK-R2-120P1K2	2.7 (6)

Dynamic Brake Resistors

Dimensions are in millimeters. Dimensions are not intended to be used for manufacturing purposes.

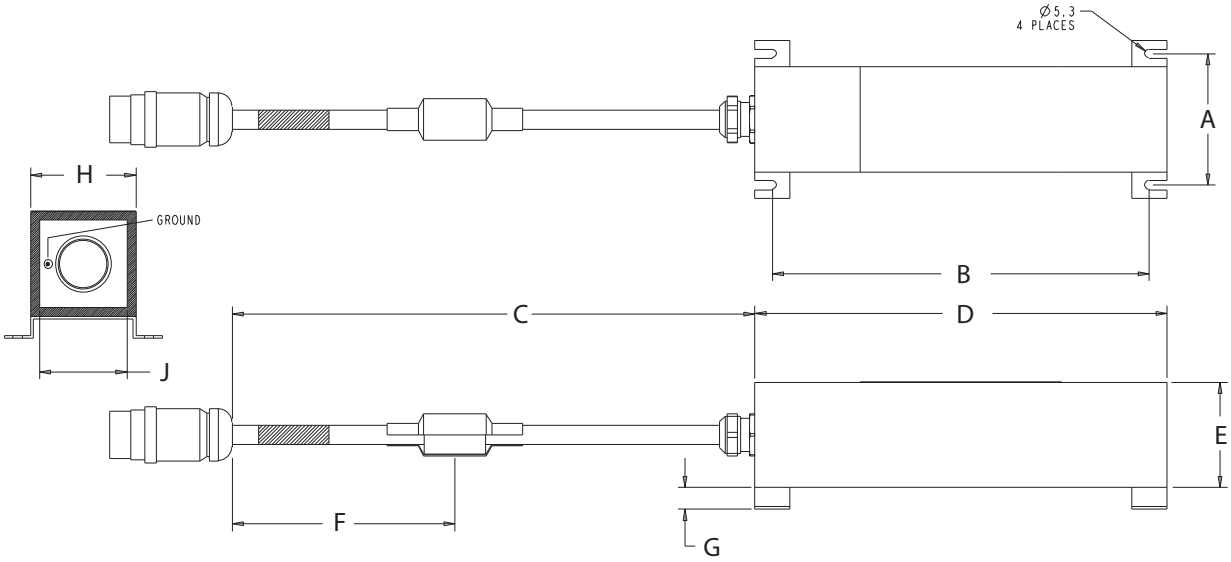

Cat. No.	A	B	C	D	E	F	G	H	J
284R-091P500	89±3	215±5	*	235±5	60±2	127	12.54	60±2	50±1.5
284R-360P500		215±5		235±5					
284R-120P1K2		420±5		440±5					

* Length is user-selectable based on a suffix added to the catalog number. For a length of 500±10 mm, add **-M05** to the end of the catalog number. For a length of 1000±10 mm, add **-M1** to the end of the catalog number.

Three-Phase Power Media

	Three-Phase Power Trunk Cable	**Three-Phase Power Drop Cable**	**Three-Phase Power Tees and Reducers**	**Three-Phase Power Receptacles**	**Three-Phase Power Accessories**
Description	• Cordset - Cable with integrel female or male connector on one end • PatchCord - Cable with integrel female or male connector on each end	• Cordset - Cable with integrel female or male connector on one end • PatchCord - Cable with integrel female or male connector on each end	• Tee - Connects to a single drop line to trunk with quick change connectors • Reducing Tee - Connects to a single drop line (Mini) to trunk (quick change) connector • Reducer - Connects from quick change male connector to mini female connector	• Female receptacles are a panel mount connector with flying leads • Male receptacles are a motor juction box mounted connector with flying leads	• Sealing Caps offered in versions to interface with female or male connectors • Locking Clips clamshell design clips over three power phase connector to limit customer access
Features	• Rated for motor branch circuits • Straight or right angle connectors • 4-pin connector type • Cable rating: TC-ER/STOOW • Multiple standard lengths	• Rated for motor branch circuits • Straight or right angle connectors • 4-pin connector type • Cable rating: TC-ER/STOOW • Multiple standard lengths	• Rated for motor branch circuits • Trunk Tee, Reducing Tee and Reducer • 4-pin connector type	• Rated for motor branch circuits • Male and female configurations • 4-pin connector type • 1/2 in. NPT • Available in 1 m length	• Sealing Caps - available in quick change and mini styles • Locking Clips are design for the quick change and mini style connectors
Rated Voltage	600V	600V	600V	600V	—
Connector Body Dimensions	• Straight: 88.9 x 38.6 mm • Right angle:75.5 x 74 mm	• Straight: 56 x 25.4 mm • Right angle: 44.9 x 40.4 mm	• Trunk Tee: 108 x 73.6 mm • Reducing Tee: 108 x 65.5 mm • Reducer: 112.5 x 38.1 mm	• M22 Female: 33.45 x 25.45 mm • M22 Male: 28.04 x .25.45 mm • M35 Female: 71.12 x 38.10 mm • M35 Male: 63.50 x 38.10 mm	—
Product Selection	Page 61	Page 62	Page 63	Page 65	Page 71

Control Power Media

	Control Power Trunk & Drop Cables	**Control Power T-ports**	**Control Power Receptacles**	**Control Power Shorting Plugs**	**Control Power Accessories**
Description	Cable with integral connector on either one or both ends	T-port connects a single drop line to a trunk	Panel mount connector with flying leads	Integral connector with leads shorted for specific application requirements	Sealing caps, mounting nuts, and sealing washers
Features	• 6-pin/5-used configuration • Male and female • Straight or right angle versions • 16 AWG conductors, cable dual rated UL TC/Open Wiring and STOOW • Multiple standard lengths	• 6-pin/5-used configuration • Compact design • Color-coded E-stop in and E-stop out configurations	• 6-pin/5-used configuration • Male and female • 16 AWG conductors • 1/2 NPT mounting threads • Multiple standard lengths	• 6-pin/5-used configuration • Male • Multiple versions color coded for simple identification	• Rugged durable construction • Designed to mate with Control Power media
Rated Voltage	600V	600V	600V	600V	—
Connector Body Dimensions	• Straight: 56 x 25 mm (2.2 x 1 in.) • Right angle:40 x 45 mm (1.6 x 1.8 in.)	72 x 64 mm (2.8 x 2.5 in.)	30 x 25 mm (1.2 x 1 in.)	56 x 25 mm (2.2 x 1 in.)	—
Product Selection	Page 67	Page 68	Page 69	Page 70	Page 71

Description

The ArmorStart Power Media offers both three-phase and control power cable systems of cordsets, patchcords, receptacles, tees, reducers, and accessories to be used with the ArmorStart Distributed Motor Controller. These cable system components allow quick connection of ArmorStart Distributed Motor Controllers, thereby reducing installation time. They allow repeatable, reliable connection of the three-phase and control power to the ArmorStart Distributed Motor Controller and motor by providing a plug-and-play environment that also avoids system miswiring.

Compared to the traditional conduit installations, with the ArmorStart Power Media you profit and benefit from:

- Reduce commissioning time
- Plug-and-play design eliminates wiring errors
- Increased system design flexibility
- No special tools required
- Reduced labor costs

Three-Phase Power Media

The three-phase power media offers both mini- and quick-change disconnect cables that provide a secure connection to the ArmorStart Distributed Motor Controller. Connectors can be straight or right angled and are physically keyed to prevent wiring mishaps. The cabling options include:

- Cordsets: Cable with integral male or female connector at one end and flying leads at the other
- Patchcords: Cable with integral connector at each end (one male, one female)

Available in 0.5, 1, 1.5, 2, 2.5, 3, 4, 6, 8, 10, 12, or 14 m lengths.

The three-phase tees and reducer offer flexibility in system design. The 4-pin T-port connects a single drop line to the trunk.

The receptacles provide a termination point at the panel and motor junction box. The female receptacles can be used for a panel mount connection. The male receptacles can be used for a quick disconnect at the motor junction box.

The three-phase power media components are rated for motor branch circuits per UL 2237.

Control Power Media

The control power media offers a mini disconnect cables that provide a secure connection to the ArmorStart Distributed Motor Controller. The control power media components are a 6-pin/5-used configuration to prevent mis-wiring with network connectors. Connectors can be straight or right angled and are physically keyed to prevent wiring mishaps. The cabling options include:

- Cordsets: Cable with integral male or female connector at one end and flying leads at the other

Available in 2, 5, or 10 m lengths.

- Patchcords: Cable with integral connector at each end (one male, one female)

Available in 1, 2, 3, 5, or 10 m lengths.

The control power tees offer flexibility in system design. The 6-pin/5-used T-port connects a single drop line to the trunk. Two types of tees are offered. The E-stop In tee is used to connect to the Bulletin 800F On-Machine E-Stop station using a control power media patchcord. The E-stop Out tee is used with a cordset or patchcord to connect to the ArmorStart Distributed Motor Controller.

The receptacles provide a termination point at the panel and ArmorStart Distributed Motor Controller. The female receptacles can be used for a panel mount connection. The male receptacles can be used for a quick disconnect at the ArmorStart Distributed Motor Controller with gland plate design.

ArmorStart Media Diagram

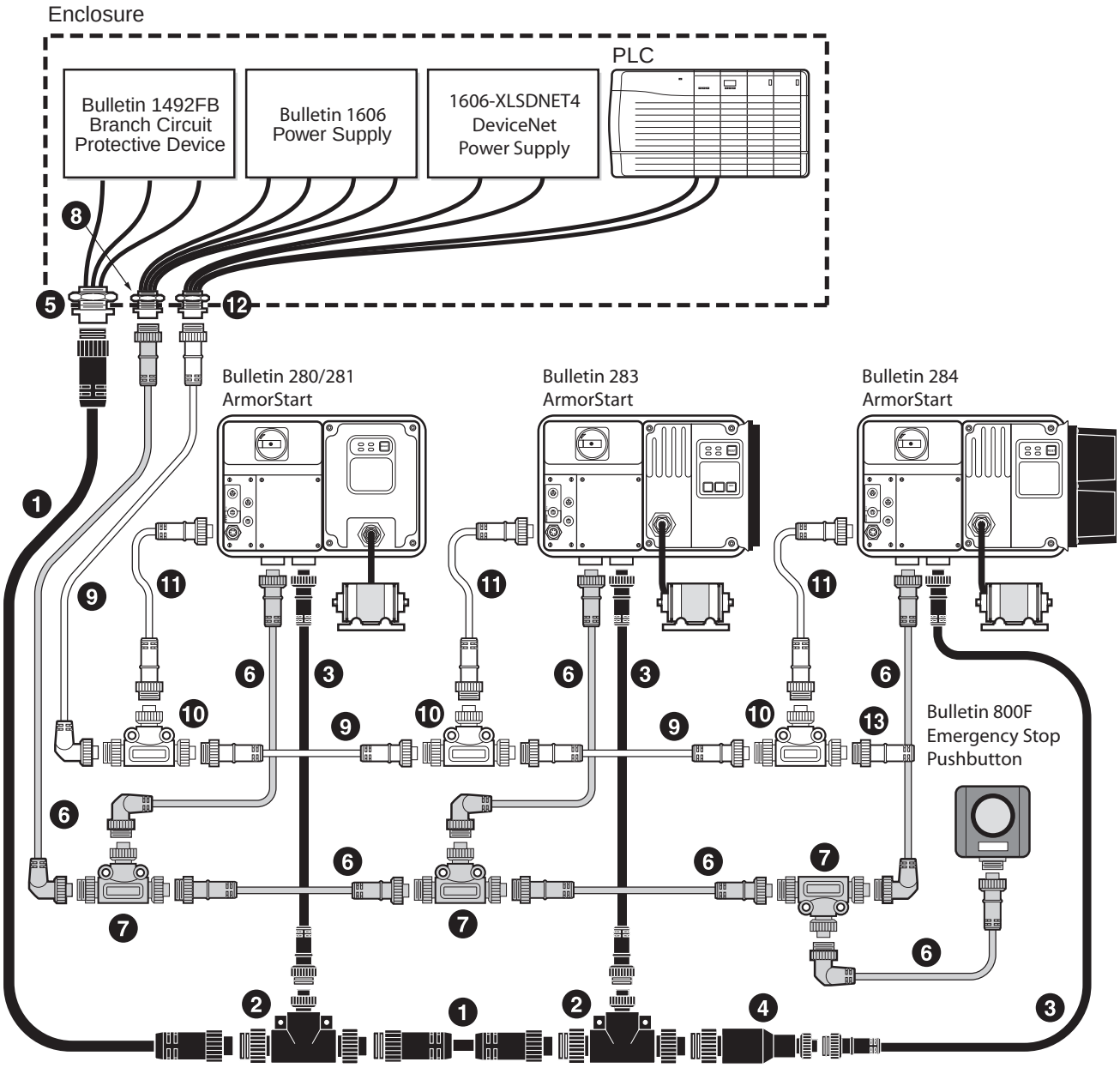

1. 3-Phase Power Patchcord (Trunk)
2. 3-Phase Power T-port
3. 3-Phase Power Patchcord (Drop)
4. 3-Phase Power Reducer
5. 3-Phase Power Receptacle
6. Control Power Patchcord
7. Control Power T-port
8. Control Power Receptacle
9. DeviceNet Patchcord (Trunk)
10. DeviceNet T-port
11. DeviceNet Patchcord (Drop)
12. DeviceNet Receptacle
13. DeviceNet Terminator

Bulletin 280 — ArmorStart Three-Phase Power Trunk Cables (Cordsets and Patchcords)

- Rated for motor branch circuits per UL 2237
- One-piece molded design
- Can be used as a drop cable for ArmorStart Distributed Motor Controllers with a short circuit protection rating of 25 A, or when desired to minimize voltage drops on extended cable runs

Standards Compliance

UL 2237

Certifications

UL Listed (File No. E318496, Guide PVVA)

Product Selection

Cordsets ❄

Pin Count	Assembly Rating	Cat. No.			
		Straight Female	Right-Angle Female	Straight Male	Right-Angle Male
4-Pin	600V, 25 A	280-PWRM35E-M∗	280-PWRM35F-M∗	280-PWRM35G-M∗	280-PWRM35H-M∗

Patchcords ❄

Pin Count	Assembly Rating	Cat. No.			
		Straight Female Straight Male	Right-Angle Female Straight Male	Straight Female Right-Angle Male	Right-Angle Female Right-Angle Male
4-Pin	600V, 25 A	280-PWRM35A-M∗	280-PWRM35B-M∗	280-PWRM35C-M∗	280-PWRM35D-M∗

∗ The cat. no. is incomplete as shown. For desired length, replace the symbol with: **05** — 0.5 m (1.62 ft), **1** — 1 m (3.3 ft), **015** — 1.5 m (4.9 ft), **2** — 2 m (6.5 ft), **025** — 2.5 m (8.1 ft), **3** — 3 m (9.8 ft), **4** — 4 m (13.1 ft), **6** — 6 m (19.7 ft), **8** — 8 m (26.2 ft), **10** — 10 m (32.8 ft), **12** — 12 m (39.4 ft), or **14** — 14 m (45.9 ft).

❄ Stainless steel version may be ordered by adding "**S**" to the catalog number. For example: **280S-PWRM35A-E-M3**.

Specifications

Mechanical	
Coupling Nut	Black Anodized Aluminum or 316 Stainless Steel
Housing	Black PVC
Insert	Black PVC
Cable Diameter	0.775 in. +/- 0.12 in. (19.68 mm +/- 0.5 mm)
Electrical	
Contacts	Copper Alloy with Gold over Nickel Plating
Cable	Black PVC, dual rated UL TC/Open Wiring and STOOW
Cable Rating	600V AC/DC
Assembly Rating	600V @ 25 A, Symmetrical Amps RMS Fault: 65 kA when used with Class CC, T, or J type fuses
Environmental	
Enclosure Type Rating	IP67, NEMA 4; IP69K 1200 psi washdown
Operating Temperature	UL Type TC 600V 90 °C Dry 75 °C Wet, Exposed Run (ER) or MTW 600V 90 °C or STOOW 105 °C 600V - CSA STOOW 600V FT2

Pinout and Color Code

	Face View Pinout	
	4-Pin	
	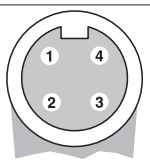 Female	Male
Color Code	1 Black 2 Green/Yellow Extended PIN	3 Red 4 White

Approximate Dimensions

Dimensions in millimeters (inches). Dimensions are not intended to be used for manufacturing purposes and are subject to change.

Female straight

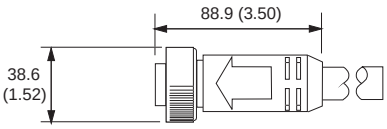

Female 90 deg.

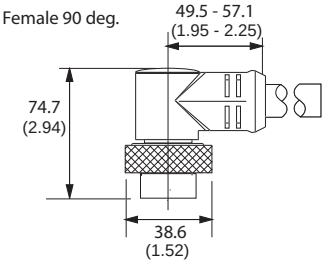

Male straight

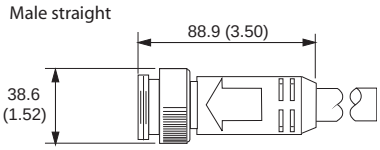

Male 90 deg.

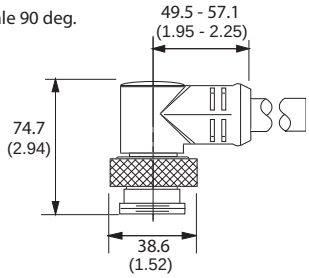

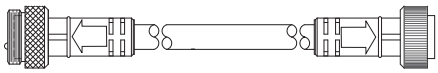

Example of Patchcord

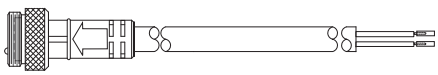

Example of Cordset

ArmorConnect® Power Media

Product Selection/Specifications/Approximate Dimensions

Bulletin 280 — ArmorStart Three-Phase Power Drop Cables (Cordsets and Patchcords)

- Rated for motor branch circuits per UL 2237
- One-piece molded design
- Can be used as a trunk cable for ArmorStart Distributed Motor Controllers with a short circuit protection rating of 10 A

Standards Compliance

UL 2237

Certifications

UL Listed (File No. E318496, Guide PVVA)

Product Selection

Cordsets ❄

Pin Count	Assembly Rating	Cat. No.			
		Straight Female	Right-Angle Female	Straight Male	Right-Angle Male
4-Pin	600V, 10 A	280-PWRM22E-M∗	280-PWRM22F-M∗	280-PWRM22G-M∗	280-PWRM22H-M∗
4-Pin	600V, 15 A	280-PWRM24E-M∗	280-PWRM24F-M∗	280-PWRM24G-M∗	280-PWRM24H-M∗

Patchcords ❄

Pin Count	Assembly Rating	Cat. No.			
		Straight Female Straight Male	Right-Angle Female Straight Male	Straight Female Right-Angle Male	Right-Angle Female Right-Angle Male
4-Pin	600V, 10 A	280-PWRM22A-M∗	280-PWRM22B-M∗	280-PWRM22C-M∗	280-PWRM22D-M∗
4-Pin	600V, 15 A	280-PWRM24A-M∗	280-PWRM24B-M∗	280-PWRM24C-M∗	280-PWRM24D-M∗

∗ The cat. no. is incomplete as shown. For desired length, replace the symbol with: **05** — 0.5 m (1.62 ft), **1** — 1 m (3.3 ft), **015** — 1.5 m (4.9 ft), **2** — 2 m (6.5 ft), **025** — 2.5 m (8.1 ft), **3** — 3 m (9.8 ft), **4** — 4 m (13.1 ft), **6** — 6 m (19.7 ft), **8** — 8 m (26.2 ft), **10** — 10 m (32.8 ft), **12** — 12 m (39.4 ft), or **14** — 14 m (45.9 ft).

❄ Stainless steel version may be ordered by adding "**S**" to the catalog number. For example: **280S-PWRM22A-E-M3**.

Specifications

Mechanical	
Coupling Nut	Black Anodized Aluminum or 316 Stainless Steel
Housing	Black PVC
Insert	Black PVC
Cable Diameter	0.43 in. +/- 0.12 in. (10.9 mm +/- 0.5 mm)
Electrical	
Contacts	Brass with Gold over Nickel Plating
Cable	Black PVC, dual rated UL TC/Open Wiring and STOOW
Cable Rating	600V AC/DC
Assembly Rating	600V @ 10 A or 600V @ 15 A, Symmetrical Amps RMS Fault: 65 kA when used with Class CC, T, or J type fuses
Environmental	
Enclosure Type Rating	IP67, NEMA 4; IP69K 1200 psi washdown
Operating Temperature	UL Type TC 600V 90 °C Dry 75 °C Wet, Exposed Run (ER) or MTW 600V 90 °C or STOOW 105 °C 600V - CSA STOOW 600V FT2

Pinout and Color Code

	Face View Pinout	
	4-Pin	
	Female	Male
Color Code	1 Black 2 White	3 Red 4 Green/Yellow Extended PIN

Approximate Dimensions

Dimensions in millimeters (inches). Dimensions are not intended to be used for manufacturing purposes and are subject to change.

Female straight

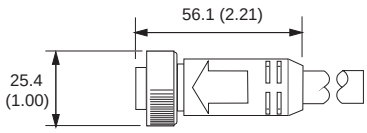

Male straight

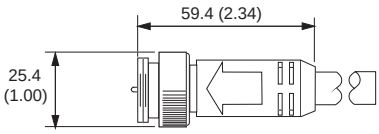

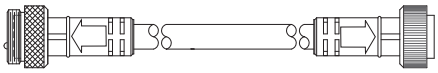

Example of Patchcord

Female 90 deg.

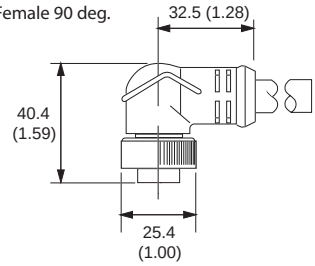

Male 90 deg.

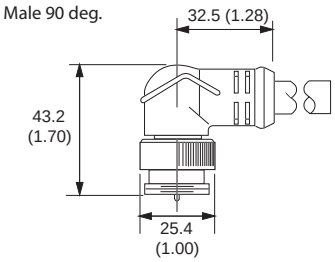

Example of Cordset

Bulletin 280 ArmorStart Three-Phase Power Tees and Reducers (4-Pole)

- Rated for motor branch circuits per UL 2237
- 4-pin T-port connects a single drop line to the trunk
- 4-pin configuration

Standards Compliance

UL 2237

Certifications

UL Listed (File No. E318496, Guide PVVA)

Product Selection

Tees and Reducing Adapters ❄

Description	Assembly Rating	Color Code	Cat. No.
M35, 3-Phase Power Tee, 4 pole	25 A	A	280-T35
M35, 3-Phase Power Tee Reducing drop M22, 4 pole	Trunk 25 A/Drop 15 A	B	280-RT35
M35, 3-Phase Reducing Adapter, 4 pole	15 A	C	280-RA35

❄ Stainless steel version may be ordered by adding "**S**" to the catalog number. For example: **280S-T35**.

Specifications

Mechanical	
Coupling Nut	Black Anodized Aluminum (Trunk), Black Zinc Diecast (Drop) or 316 Stainless Steel
Housing	Black PVC
Insert	Black PVC
Electrical	
Contacts	Copper Alloy with Gold over Nickel Plating
Voltage	600V AC/DC
Assembly Rating	Trunk Tee: 25 A Reducing Tee: Trunk 25 A/Drop 15 A Reducer: 15 A Symmetrical Amps RMS Fault: 65 kA when used with Class CC, T, or J type fuses
Environmental	
Enclosure Type Rating	IP67, NEMA 4; IP69K 1200 psi washdown

Pinout and Color Code

Assembly Rating	Color Code	Face View Pinout 4-Pin: Quick Change Connector	Face View Pinout 4-Pin: Mini Connector
Trunk Tee: 25 A	A	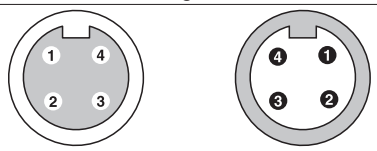 Female Male 1 Black 2 Green/Yellow Extended PIN 3 Red 4 White	
Reducing Tee: Trunk 25 A/Drop 15 A	B	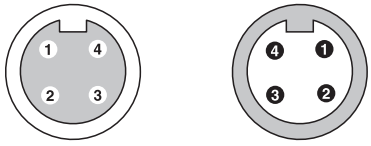 Female Male 1 Black 2 Green/Yellow Extended PIN 3 Red 4 White	 Female 1 Black 2 White 3 Red 4 Green/Yellow Extended PIN
Reducer: Trunk 25 A/Drop 15 A	C	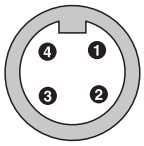 Male 1 Black 2 Green/Yellow Extended PIN 3 Red 4 White	 Female 1 Black 2 White 3 Red 4 Green/Yellow Extended PIN

Dimensions in millimeters (inches). Dimensions are not intended to be used for manufacturing purposes and are subject to change.

Reducer

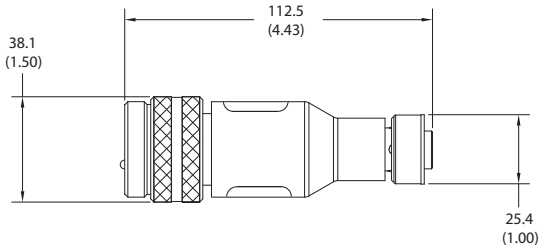

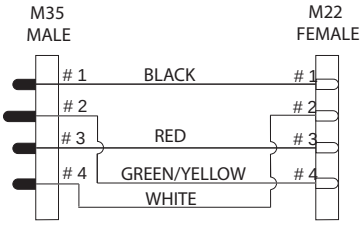

WIRING DIAGRAM

Power Tee

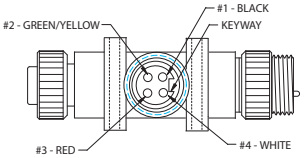

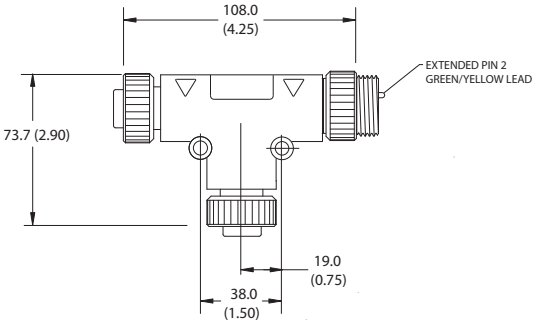

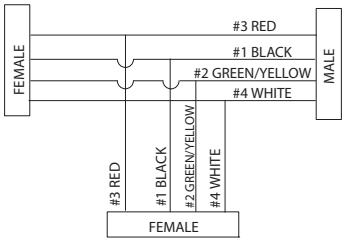

WIRING DIAGRAM

Power Tee - reducing drop

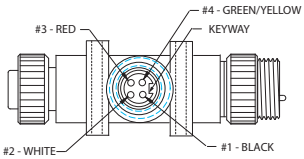

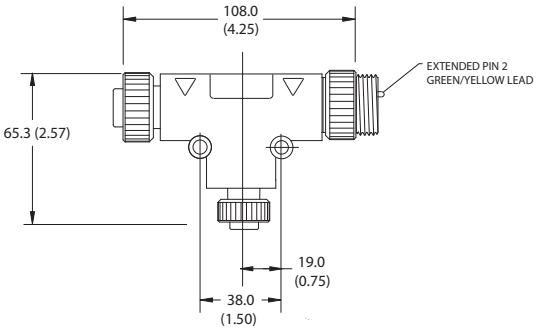

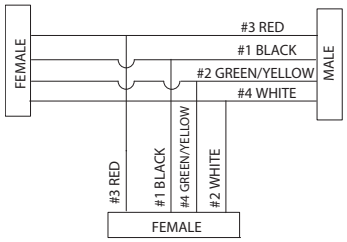

WIRING DIAGRAM

Bulletin 280 — ArmorStart Three-Phase Power Receptacles (Male and Female)

- Rated for motor branch circuits per UL 2237
- 16 and 10 AWG conductors
- 4-pin configuration
- Female receptacles can be used for panel mount connection
- Male receptacles can be used for quick disconnect motor junction box
- 1/2 in.-14 NPT threads

Standards Compliance

UL 2237

Certifications

UL Listed (File No. E318496, Guide PVVA)

Product Selection

Receptacles ❄

Pin Count	Assembly Rating	Color Code	Cat. No. Female	Cat. No. Male
4-Pin	16 AWG 600V 10 A	A	280-M22F-M1	280-M22M-M1
4-Pin	14 AWG 600V 15 A	A	280-M24F-M1	280-M24M-M1
4-Pin	10 AWG 600V 25 A	B	280-M35F-M1	280-M35M-M1

❄ Stainless steel version may be ordered by adding "**S**" to the catalog number. For example: **280S-M35F-M**1.

Specifications

Mechanical	
Insert	Black PVC
Receptacle Shell Material	Black Anodized Aluminum (female) and Zinc DieCast, Black E-Coat (male) or 316 Stainless Steel
Electrical	
Contacts	Copper Alloy with Gold over Nickel Plating (Trunk), Brass with Gold over Nickel Plating (Drop)
Cable Rating	600V AC/DC
Assembly Rating	4-pin — 16 AWG, 600V @ 10 A 4-pin — 14 AWG, 600V @ 15 A 4-pin — 10 AWG, 600V @ 25 A Symmetrical Amps RMS Fault: 65 kA when used with Class CC, T, or J type fuses
Environmental	
Enclosure Type Rating	IP67, NEMA 4; IP69K 1200 psi washdown

Pinout and Color Code

Assembly Rating	Color Code	Face View Pinout 4-Pin: Female	Male	Female	Male
16 AWG 600V 10 A	A			1 Black 2 White	3 Red 4 Green/Yellow Extended PIN
10 AWG 600V 25 A	B	1 Black 2 Green/Yellow Extended PIN	3 Red 4 White		

Approximate Dimensions

Dimensions in millimeters (inches). Dimensions are not intended to be used for manufacturing purposes and are subject to change.

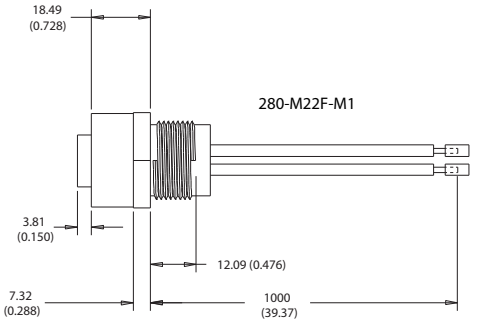

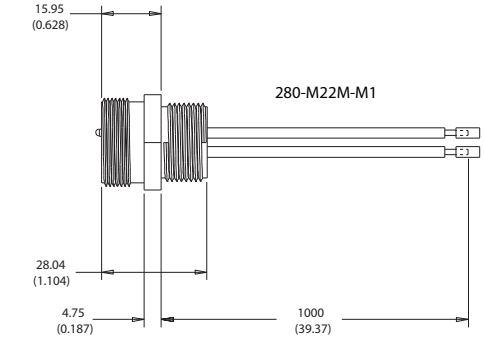

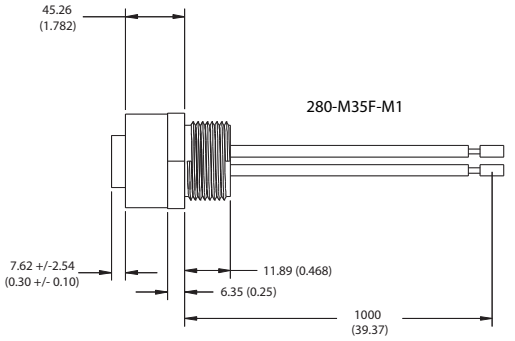

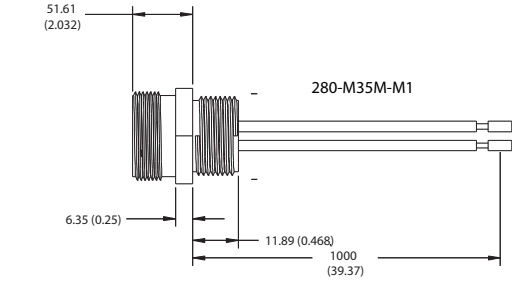

Bulletin 889N — ArmorStart Control Power Trunk and Drop Cables

- 6-pin/5-used configuration to prevent mis-wiring with network connectors
- One-piece molded design
- 16 AWG exposed run (ER) rated cable
- Red overmolds to indicate presence of E-stop wiring

Product Selection

Cordsets ❄

Pin Count	Assembly Rating	Cat. No.			
		Straight Female	Right-Angle Female	Straight Male	Right-Angle Male
6-Pin/5-used	16 AWG 600V 10 A	889N-F65GF-∗	889N-R65GF-∗	889N-M65GF-∗	889N-E65GF-∗

∗ Replace symbol with desired length in meters (2, 5, or 10 standard).
❄ Stainless steel version may be ordered by adding "**S**" to the catalog number. For example: **889NS-F65GF-2**.

Patchcords ❄

Pin Count	Assembly Rating	Cat. No.			
		Straight Female Straight Male	Right-Angle Female Straight Male	Straight Female Right-Angle Male	Right-Angle Female Right-Angle Male
6-Pin/5-used	16 AWG 600V 10 A	889N-F65GFNM-‡	889N-R65GFNM-‡	889N-F65GFNE-‡	889N-R65GFNE-‡

‡ Replace symbol with desired length in meters (1, 2, 3, 5, or 10 standard).
❄ Stainless steel version may be ordered by adding "**S**" to the catalog number. For example: **889NS-F65GFNM-1**.

Specifications

Mechanical	
Coupling Nut	Black epoxy coated zinc or 316 Stainless Steel
Overmold	Red Riteflex TPE
Insert	Yellow Riteflex TPE
Contacts	Brass/gold over palladium Nickel
Cable	Grey PVC, 16 AWG, dual rated UL TC/Open Wiring and STOOW
Cable Diameter	0.44 in. +/- 0.12 in. (11.18 mm +/- 0.5 mm)
Electrical	
Cable Rating	UL Type TC 600V 90 °C Dry 75 °C Wet, Open Wiring or MTW 600V 90 °C or STOOW 105 °C 600V - CSA STOOW 600V FT2
Assembly Rating	600V, 10 A
Environmental	
Enclosure Type Rating	IP67, NEMA 4; IP69K 1200 psi washdown
Operating Temperature	-20…+90 °C (-4…+194 °F)

Pinout and Color Code

	Face View Pinout	
	6-pin/5-used	
	Female	Male
Color Code	1 Red 2 Black 3 Green	4 Blank/Not Used 5 Blue 6 White

Approximate Dimensions

Dimensions in millimeters (inches). Dimensions are not intended to be used for manufacturing purposes and are subject to change.

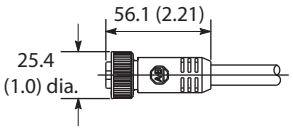

Female straight

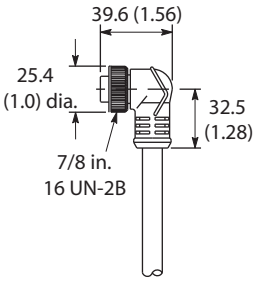

Female 90 deg.

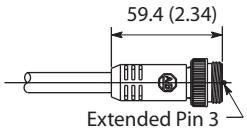

Male straight

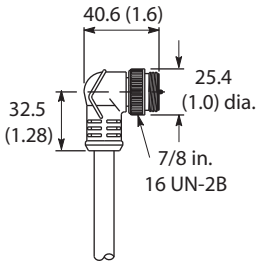

Male 90 deg.

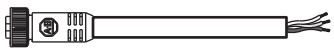

Example of Cordset

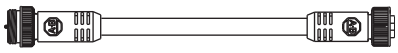

Example of Patchcord

Bulletin 898 — ArmorStart Control Power T-Ports

- 6-pin/5-used configuration to prevent mis-wiring with network connectors
- One piece molded design
- Durable compact design

Product Selection

T-Ports ❄

Pin Count	Assembly Rating	Overmold Color	Wiring Diagram	Cat. No.
E-stop Out	600V 10 A	Red	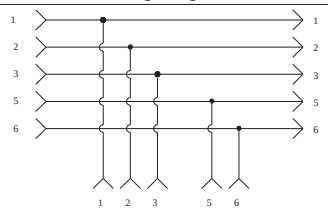	898N-653ES-NKF
E-stop In		Black	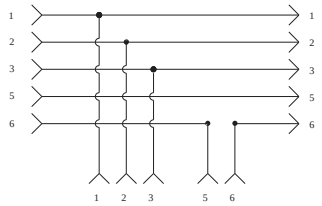	898N-653ST-NKF

❄ Stainless steel version may be ordered by adding "**S**" to the catalog number. For example: **898NS-653ST-NKF**.

Specifications

Mechanical	
Coupling Nut	Black epoxy coated zinc or 316 Stainless Steel
Housing	Riteflex TPE
Insert	Yellow Riteflex TPE
Contacts	Brass/gold over palladium Nickel
Electrical	
Assembly Rating	600V, 10 A
Environmental	
Enclosure Type Rating	IP67, NEMA 4; IP69K 1200 psi washdown
Operating Temperature	-20…+90 °C (-4…+194 °F)

Pinout and Color Code

	Face View Pinout	
	6-pin/5-used	
	Female	Male
Color Code	1 Red 2 Black 3 Green	4 Blank/Not Used 5 Blue 6 White

Approximate Dimensions

Dimensions in millimeters (inches). Dimensions are not intended to be used for manufacturing purposes and are subject to change.

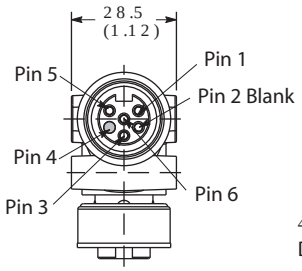

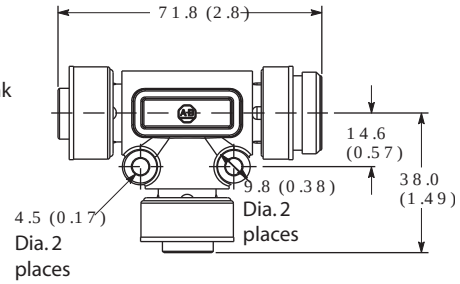

WIRING A

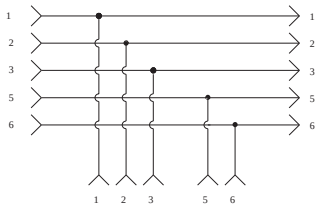

WIRING B

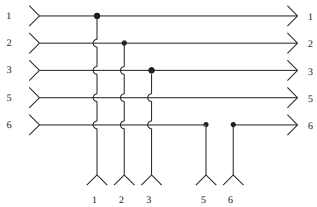

Bulletin 888N — ArmorStart Control Power Receptacles

- 6-pin/5-used configuration to prevent mis-wiring with network connectors
- 1/2 in. - 14 NPT threads

Product Selection

Receptacles ❄

Pin Count	Assembly Rating	Cat. No.	
		Female	Male
6-Pin/5-used	16 AWG 600V 10 A	888N-D65AF1-∗	888N-M65AF1-∗

∗ Replace symbol with desired length in meters (0.3 or 1 standard).

❄ Stainless steel version may be ordered by adding "**S**" to the catalog number. For example: **888NS-D65AF1-1**.

Specifications

Mechanical	
Receptacle Shell	Male: Black epoxy coated zinc diecast Female: Black anodized Aluminum or 316 Stainless Steel
Insert	Yellow PVC
Contacts	Brass/gold over palladium Nickel
Electrical	
Assembly Rating	600V, 10 A
Environmental	
Enclosure Type Rating	IP67, NEMA 4; IP69K 1200 psi washdown
Operating Temperature	-20…+90 °C (-4…+194 °F)

Pinout and Color Code

	Face View Pinout	
	6-pin/5-used	
	Female	Male
Color Code	1 Red 2 Black 3 Green	4 Blank/Not Used 5 Blue 6 White

Approximate Dimensions

Dimensions in millimeters (inches). Dimensions are not intended to be used for manufacturing purposes and are subject to change.

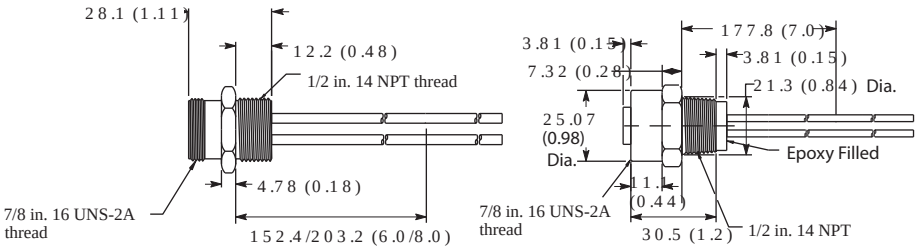

Bulletin 889A — ArmorStart Control Power Shorting Plugs

- 6-pin/5-used configuration to prevent mis-wiring with network connectors
- 1/2 in. - 14 NPT threads

Product Selection

Shorting Plugs ❄

Configuration	Assembly Rating	Overmold Color	Wiring Diagram	Cat. No.
E-stop In	600V 10 A	Red	1. ← 2. ← N/C 3. ← N/C 4. ← Blank 5. ← N/C 6. ←	889A-M65SP61
E-stop Out		Black	1. ← N/C 2. ← N/C 3. ← N/C 4. ← Blank 5. ← 6. ←	889A-M65SP65

❄ Stainless steel version may be ordered by adding "**S**" to the catalog number. For example: **889AS-M65SP61**.

Specifications

Mechanical	
Coupling Nut	Black epoxy coated zinc
Overmold	Riteflex TPE
Insert	Yellow Riteflex TPE
Contacts	Brass/gold over palladium Nickel
Electrical	
Assembly Rating	600V, 10 A
Environmental	
Enclosure Type Rating	IP67, NEMA 4; IP69K 1200 psi washdown
Operating Temperature	-20…+90 °C (-4…+194 °F)

Pinout and Color Code

	Face View Pinout	
	6-pin/5-used	
	Female	Male
Color Code	1 Red 2 Black 3 Green	4 Blank/Not Used 5 Blue 6 White

Approximate Dimensions

Dimensions in millimeters (inches). Dimensions are not intended to be used for manufacturing purposes and are subject to change.

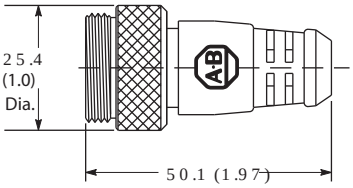

Accessories

Locking Clips

Description	Material	Package Quantity	Cat. No.
The clam shell design clips over the three-phase power media trunk connection, to limit customer access.	Black, ABS/PC Plastic	10	280-MTR35-LC
The clam shell design clips over the three-phase power media drop connection, to limit customer access.		10	280-MTR22-LC

Sealing Caps

Connector Style	Material	Thread Configuration	Dimensions	Cat. No.
Mini	Grey, Anodized Aluminum	External	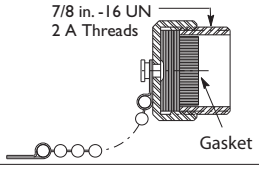	1485A-C1
		Internal	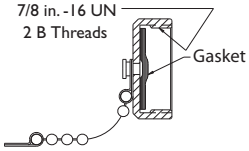	889A-NCAP
Quick Change		External	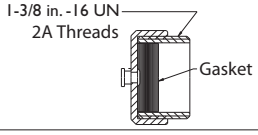	889A-QMCAP
		Internal	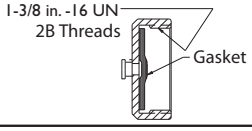	889A-QCAP

Mounting Nuts and Flat Seals

Description	Package Quantity	Cat. No.
Mounting nuts for 1/2 in. - 14 NPT threaded receptacles	10	889A-U1NUT-10
Flat sealing washers for 1/2 in. - 14 NPT threaded receptacles	10	889A-U1FSL-10

On-Machine E-Stop Stations

Enclosure Type	Quick Connect	Knockout Type	Operator	Illumination Voltage	Contact Configuration	Cat. No.
Plastic	Mini receptacle	Metric	Twist to release	24V AC/DC	1 N.C./1 N.O.	800F-1YMQ4
				120V AC		800F-1YMQ5
				240V AC		800F-1YMQ6
Metal				24V AC/DC		800F-1MYMQ4
				120V AC		800F-1MYMQ5
				240V AC		800F-1MYMQ6

E-Stop Circuit

ArmorConnect Cordset/Receptacle Pin Out:	ArmorStart Terminations
Pin 1 - RED	RED – No connection
Pin 2 - Black	Black – A2(-)
Pin 3 - Green	Green - PE
Pin 4 - Blank/ Not used	Blank/Not Used
Pin 5 - Blue	Blue – A1(+)
Pin 6 - White	White –No connection

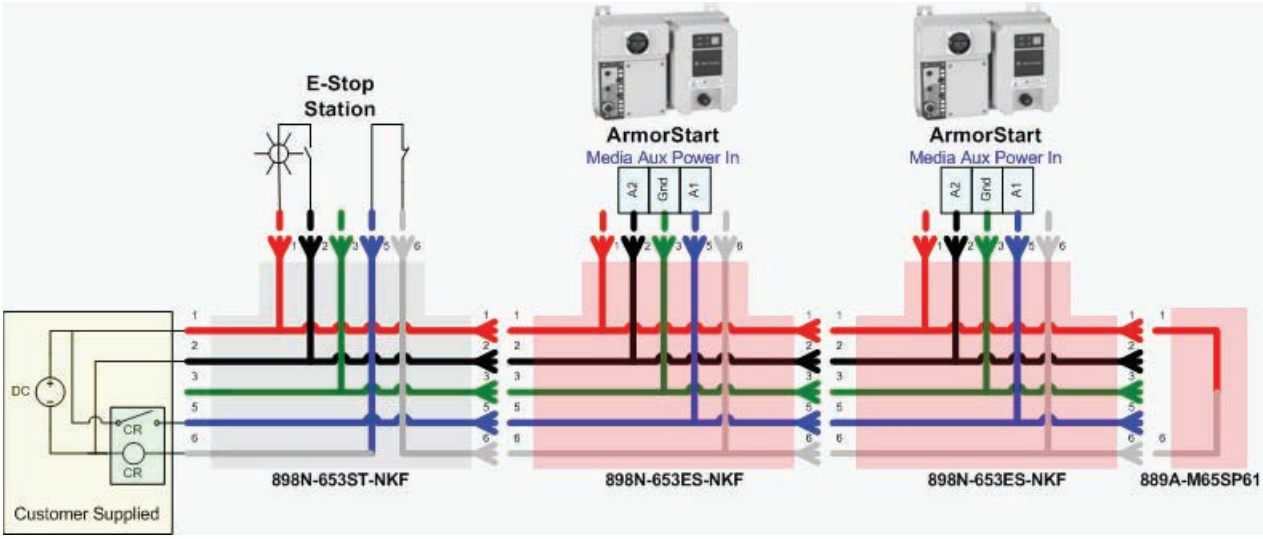

ArmorConnect, ArmorStart, ArmorPoint, ControlLogix, DeviceLogix, On-Machine, PLC, RSLogix 5000, RSNetWorx, and SLC are trademarks of Rockwell Automation, Inc. DeviceNet and the DeviceNet logo are trademarks of the Open DeviceNet Vendor Association. ControlNet is a trademark of ControlNet International, Ltd. Trademarks not belonging to Rockwell Automation, Inc., are property of their respective companies.

www.rockwellautomation.com

Power, Control and Information Solutions Headquarters

Americas: Rockwell Automation, 1201 South Second Street, Milwaukee, WI 53204-2496 USA, Tel: (1) 414.382.2000, Fax: (1) 414.382.4444
Europe/Middle East/Africa: Rockwell Automation, Vorstlaan/Boulevard du Souverain 36, 1170 Brussels, Belgium, Tel: (32) 2 663 0600, Fax: (32) 2 663 0640
Asia Pacific: Rockwell Automation, Level 14, Core F, Cyberport 3, 100 Cyberport Road, Hong Kong, Tel: (852) 2887 4788, Fax: (852) 2508 1846

Publication 280-SG001I-EN-P - January 2015
Supercedes Publication 280-SG001H-EN-P - August 2008

Copyright ©2015 Rockwell Automation, Inc. All Rights Reserved. Printed in USA