Technical Data

Original Instructions

CompactLogix 5380, Compact GuardLogix 5380, and CompactLogix 5480 Controllers Specifications

Bulletin 5069

Topic	Page
Summary of Changes	2
Specifications	3
CompactLogix 5380 Controllers	3
Compact GuardLogix 5380 Controllers	7
CompactLogix 5480 Controllers	16
Controller Minimum Spacing Requirements	20
Controller Dimensions	22
Controller Use with Other Devices	24
Ethernet Node Limits	27
Accessories	28
Additional Resources	31

Summary of Changes

This publication contains the following new or updated information. This list includes substantive updates only and is not intended to reflect all changes.

Topic	Page
Added CompactLogix™ 5380 Process controllers (5069-L320ERP, 5069-L340ERP).	Throughout
Added I/O Capacity and Message Rate Capacity specifications for controllers.	3, 7, 16

Catalog Numbers

This publication is applicable to these controllers:

CompactLogix 5380 Controller Catalog Numbers	5069-L306ER, 5069-L306ERM, 5069-L310ER, 5069-L310ERM, 5069-L310ER-NSE, 5069-L320ER, 5069-L320ERM, 5069-L320ERMK, 5069-L330ER, 5069-L330ERM, 5069-L330ERMK, 5069-L340ER, 5069-L340ERM, 5069-L350ERM, 5069-L350ERMK, 5069-L380ERM, 5069-L3100ERM
CompactLogix 5380 Process Controller Catalog Numbers	5069-L320ERP, 5069-L340ERP
Compact GuardLogix 5380 SIL 2 Controller Catalog Numbers	5069-L306ERS2, 5069-L306ERMS2, 5069-L310ERS2, 5069-L310ERMS2,5069-L320ERS2, 5069-L320ERS2K, 5069-L320ERMS2, 5069-L320ERMS2K, 5069-L330ERS2, 5069-L330ERS2K, 5069-L330ERMS2, 5069-L330ERMS2K, 5069-L340ERS2, 5069-L340ERMS2, 5069-L350ERS2, 5069-L350ERS2K, 5069-L350ERMS2, 5069-L350ERMS2K, 5069-L380ERS2, 5069-L380ERMS2, 5069-L3100ERS2, 5069-L3100ERMS2
Compact GuardLogix 5380 SIL 3 Controller Catalog Numbers	5069-L306ERMS3, 5069-L310ERMS3, 5069-L320ERMS3, 5069-L320ERMS3K, 5069-L330ERMS3, 5069-L330ERMS3K, 5069-L340ERMS3, 5069-L350ERMS3, 5069-L350ERMS3K, 5069-L380ERMS3, 5069-L3100ERMS3
CompactLogix 5480 Controller Catalog Number	5069-L430ERMW, 5069-L450ERMW, 5069-4100ERMW, 5069-L4200ERMW

CompactLogix 5380 Controllers

CompactLogix™ 5380 controllers are part of the Logix 5000™ family of controllers. The controllers provide a scalable controller solution to address a wide variety of applications. The applications range from standalone systems to more complex systems with devices that are connected to the controller via an EtherNet/IP™ network.

The controllers are mounted on a DIN rail. They can monitor and control local and remote I/O modules, and other devices connected to an EtherNet/IP network. The CompactLogix 5380 controllers support this functionality:

- Use of Compact 5000™ I/O module as local I/O and remote I/O modules.
- Use Compact 5000 I/O modules, and other I/O modules, as remote I/O modules.
- Support for Integrated Motion over an EtherNet/IP network (not all controllers).
- Use of Dual-IP mode or Linear/DLR mode.
- Use of two Ethernet ports that let the controller connect to EtherNet/IP device-level and enterprise-level networks.
- Use of 1784-SD1, 1784-SD2, 1784-SDHC8, 1784-SDHC32, 9509-CMSDCD4 Secure Digital (SD) card for nonvolatile memory.
- USB programming port for temporary connection.
- CompactLogix 5380 Process controllers (5069-L320ERP, 5069-L340ERP) support PlantPAx® 5.0, and are conformal coated to add a layer of protection when exposed to harsh, corrosive environments. For more information, see the PlantPAx DCS Configuration and Implementation User Manual, publication PROCES-UM100.

Features - CompactLogix 5380 Controllers

Feature	5069-L306ER, 5069-L306ERM	5069-L310ER, 5069-L310ER-NSE, 5069-L310ERM	5069-L320ER, 5069-L320ERM, 5069-L320ERMK, 5069-L320ERP	5069-L330ER, 5069-L330ERM, 5069-L330ERMK	5069-L340ER, 5069-L340ERM, 5069-L340ERP	5069-L350ERM, 5069-L350ERMK	5069-L380ERM	5069-L3100ERM
Controller tasks Continuous Periodic Event	32 tasks 1000 programs/task All event triggers							
Built-in communication ports	1 - USB port 2 - Ethernet ports **IMPORTANT**: Consider the following: When the controller operates in Dual-IP mode, each Ethernet port requires a unique IP address. When the controller operates in Linear/DLR mode, the controller uses only one IP address.							
USB port communication	USB 2.0, Type B Full speed (12 Mbps) Programming, configuration, firmware update, and online edits only							
Ethernet performance	10 Mbps, 100 Mbps, 1 Gbps Full-duplex only							
I/O Capacity (Class 0/1) (1)	128,000 packets/second							
Message Rate Capacity HMI/MSG (Class 3)(1)	2000 messages/second							
EtherNet/IP modes supported	Dual-IP mode (Available with the Studio 5000 Logix Designer® application, version 29.00.00 or later) Linear/DLR mode							
EtherNet/IP network topologies supported	DLR Star Linear							
EtherNet/IP nodes supported, max(2)	16	24	40	60	90	120	150	180
Socket interfaces supported, max	32							
Integrated motion(3)	5069-L306ERM	5069-L310ERM	5069-L320ERM, 5069-L320ERMK, 5069-L320ERP	5069-L330ERM, 5069-L330ERMK	5069-L340ERM, 5069-L340ERP	5069-L350ERM, 5069-L350ERMK	5069-L380ERM	5069-L3100ERM

Features - CompactLogix 5380 Controllers (Continued)

Feature	5069-L306ER, 5069-L306ERM	5069-L310ER, 5069-L310ER-NSE, 5069-L310ERM	5069-L320ER, 5069-L320ERM, 5069-L320ERMK, 5069-L320ERP	5069-L330ER, 5069-L330ERM, 5069-L330ERMK	5069-L340ER, 5069-L340ERM, 5069-L340ERP	5069-L350ERM, 5069-L350ERMK	5069-L380ERM	5069-L3100ERM
Number of axes supported, max(4)	256							
Number of CIP™ Drive axes (Position loop-configured) supported, max(5)	5069-L306ERM: 2	5069-L310ERM: 4	5069-L320ERM, 5069-L320ERMK, 5069-L320ERP: 8	5069-L330ERM, 5069-L330ERMK: 16	5069-L340ERM, 5069-L340ERP: 20	24	28	32
Programming languages	Ladder Diagram (LD) Structured Text (ST) Function Block Diagram (FBD) Sequential Function Chart (SFC)							

(1) I/O numbers are maximums; they assume no HMI/MSG. HMI/MSG numbers are maximums, they assume no I/O. Maximums assume the processor is target, not originator. Packet rates vary depending on packet size. For more details, see Troubleshoot EtherNet/IP Application Technique, publication ENET-AT003, and the EDS file for a specific catalog number.

(2) The maximum number of nodes that are listed represents when the controller is used with the Logix Designer application, version 31 or later. Some controllers can be used with earlier Logix Designer application versions. The maximum number of nodes that a controller supports can be fewer in Logix Designer application, versions 30 or earlier.

(3) Only CompactLogix 5380 controllers that have an M or P in their catalog number support Integrated Motion on EtherNet/IP networks.

(4) Any combination of CIP Drive, Virtual, Consumed, Regenerative AC/DC Converter and Non-Regenerative AC/DC Converter axis types.

(5) The maximum number of CIP Drive axes (configured for Position Loop) that can be included in the total integrated motion axes count for a controller.

Technical Specifications - CompactLogix 5380 Controllers

Attribute	5069-L306ER, 5069-L306ERM	5069-L310ER, 5069-L310ER-NSE, 5069-L310ERM	5069-L320ER, 5069-L320ERM, 5069-L320ERMK, 5069-L320ERP	5069-L330ER, 5069-L330ERM, 5069-L330ERMK	5069-L340ER, 5069-L340ERM, 5069-L340ERP	5069-L350ERM, 5069-L350ERMK	5069-L380ERM	5069-L3100ERM
User memory	0.6 MB	1 MB	2 MB	3 MB	4 MB	5 MB	8 MB	10 MB
Optional nonvolatile memory	• 1784-SD1 (1 GB) • 1784-SD2 (2 GB), ships with controller • 1784-SDHC8 (8 GB) • 1784-SDHC32 (32 GB) • 9509-CMSDCD4 (4 GB) CodeMeter CmCard card							
Local I/O modules, max	8	8	16	31(1)	31	31	31	31
MOD Power voltage range	18...32V DC							
MOD Power current, max	450 mA							
MOD Power inrush	850 mA for 125 ms							
MOD Power passthrough(2)	9.55 A @ 18...32V DC							
MOD Power current rating, max	10 A Do not exceed 10 A current draw at the MOD Power RTB.							
SA Power voltage ranges(3)	0...32V DC 0...240V AC, 47...63 Hz ATEX/IECEX, 125V AC max							
SA Power current, max(3)	10 mA (DC power) 25 mA (AC power)							
SA Power passthrough(3), (4)	9.95 A @ 0...32V DC 9.975 A @ 0...240V AC, 47...63 Hz ATEX/IECEX, 125V AC max							
SA Power current rating, max (3)	10 A (AC or DC power) Do not exceed 10 A current draw at the SA Power RTB.							
Power dissipation, max	8.5 W							
Thermal dissipation, max	29 BTU/hr							
Isolation voltage	300V (continuous), Basic Insulation Type, SA, and MOD Power to Backplane 300V (continuous), Basic Insulation Type, SA to MOD Power 300V (continuous), Basic Insulation Type, Ethernet to Backplane 300V (continuous), Double Insulation Type, Ethernet to MOD Power 300V (continuous), Double Insulation Type, Ethernet to SA Power 50V (continuous), Functional Insulation Type, Ethernet to USB 300V (continuous), Basic Insulation Type, USB to Backplane 300V (continuous), Double Insulation Type, USB to MOD Power 300V (continuous), Double Insulation Type, USB to SA Power No isolation between Ethernet ports Type tested at 1500V AC for 60 s							
Weight, approx	0.768 kg (1.693 lb)							

Technical Specifications - CompactLogix 5380 Controllers (Continued)

Attribute	5069-L306ER, 5069-L306ERM	5069-L310ER, 5069-L310ER-NSE, 5069-L310ERM	5069-L320ER, 5069-L320ERM, 5069-L320ERMK, 5069-L320ERP	5069-L330ER, 5069-L330ERM, 5069-L330ERMK	5069-L340ER, 5069-L340ERM, 5069-L340ERP	5069-L350ERM, 5069-L350ERMK	5069-L380ERM	5069-L3100ERM
Dimensions (HxWxD), approx	143.97 x 98.10 x 136.81 mm (5.67 x 3.86 x 5.39 in.)							
Location	DIN rail mount (horizontal mount only)							
DIN rail	Compatible zinc-plated, chromate steel DIN rail. EN50022 - 35 x 7.5 mm (1.38 x 0.30 in.)							
Removable terminal block	RTBs are available in separately ordered 5069 RTB kits. The MOD power connection uses a 4-point RTB, and the SA power connection uses a 6-point RTB. The following kits are available: • Kit catalog number 5069-RTB64-SCREW contains RTB catalog numbers 5069-RTB6-SCREW and 5069-RTB4-SCREW. • Kit catalog number 5069-RTB64-SPRING contains RTB catalog numbers 5069-RTB6-SPRING and 5069-RTB4-SPRING.							
Terminal block torque	5069-RTB4-SCREW & 5069-RTB6-SCREW: 0.4 N•m (3.5 lb•in) 5069-RTB4-SPRING & 5069-RTB6-SPRING: Torque does not apply							
Wire size	5069-RTB4-SCREW, 5069-RTB6-SCREW connections: 0.5...1.5 mm^2 (22...16 AWG) solid or stranded copper wire that is rated at 105 °C (221 °F), or greater, 3.5 mm (0.14 in.) max diameter including insulation, single wire connection only 5069-RTB4-SPRING, 5069-RTB6-SPRING connections: 0.5...1.5 mm^2 (22...16 AWG) solid or stranded copper wire that is rated at 105 °C (221 °F), or greater, 2.9 mm (0.11 in.) max diameter including insulation, single wire connection only Ethernet connections: Ethernet Cabling and Installation according to IEC 61918 and IEC 61784-5-2							
Insulation stripping length	5069-RTB4-SCREW, 5069-RTB6-SCREW connections: 12 mm (0.47 in.) 5069-RTB4-SPRING, 5069-RTB6-SPRING connections: 10 mm (0.39 in.)							
Wire category(5)	3 - on USB port 1 - on power ports 2 - on Ethernet ports							
Enclosure	None (open-style)							
North American temperature code	T4							
ATEX temperature code	T4							
IECEx temperature code	T4							

(1) When you use these controllers with the Studio 5000 Logix Designer application, version 29.00.00, the application limits the number of local I/O modules in the project to 16. For more information, see the Rockwell Automation Knowledgebase article #942580, '5380 CompactLogix controllers limited to 16 local 5069 modules in version 29 of Studio 5000® environment.The document is available at http://www.rockwellautomation.com/knowledgebase.
With the Logix Designer application, version 30.00.00 or later, the controllers support as many as 31 local I/O modules.

(2) Maximum level of MOD Power current that the controller can pass through to the next module in the system. The specific level of current passed through varies based on system configuration.

(3) SA power specifications are based on the number and type of Compact 5000 I/O modules that are used in the system. If the set of I/O modules that are used in the system require AC and DC voltage, you must install a 5069-FPD field potential distributor to separate the module types.

(4) Maximum level of SA Power current that the controller can pass through to the next module in the system. The specific level of current passed through varies based on system configuration.

(5) Use this Conductor Category information for planning conductor routing. See the Industrial Automation Wiring and Grounding Guidelines, publication 1770-4.1.

Environmental Specifications - CompactLogix 5380 Controllers

Attribute	5069-L306ER, 5069-L306ERM, 5069-L310ER, 5069-L310ER-NSE, 5069-L310ERM, 5069-L320ER, 5069-L320ERM, 5069-L320ERMK, 5069-L320ERP, 5069-L330ER, 5069-L330ERM, 5069-L330ERMK, 5069-L340ER, 5069-L340ERM, 5069-L340ERP, 5069-L350ERM, 5069-L350ERMK, 5069-L380ERM, 5069-L3100ERM
Temperature, operating IEC 60068-2-1 (Test Ad, Operating Cold), IEC 60068-2-2 (Test Bd, Operating Dry Heat), IEC 60068-2-14 (Test Nb, Operating Thermal Shock)	0 °C < Ta < +60 °C (+32 °F <Ta < +140 °F)
Temperature, nonoperating IEC 60068-2-1 (Test Ab, Unpackaged Nonoperating Cold), IEC 60068-2-2 (Test Bb, Unpackaged Nonoperating Dry Heat), IEC 60068-2-14 (Test Na, Unpackaged Nonoperating Thermal Shock)	-40...+85 °C (-40...+185 °F)
Temperature, surrounding air, max	60 °C (140 °F)
Relative humidity IEC 60068-2-30 (Test Db, Unpackaged Damp Heat)	5...95% noncondensing
Vibration IEC 60068-2-6 (Test Fc, Operating)	5 g @ 10...500 Hz
Shock, operating IEC 60068-2-27 (Test Ea, Unpackaged Shock)	30 g
Shock, nonoperating IEC 60068-2-27 (Test Ea, Unpackaged Shock)	50 g
Emissions	IEC 61000-6-4

Environmental Specifications - CompactLogix 5380 Controllers (Continued)

Attribute	5069-L306ER, 5069-L306ERM, 5069-L310ER, 5069-L310ER-NSE, 5069-L310ERM, 5069-L320ER, 5069-L320ERM, 5069-L320ERMK, 5069-L320ERP, 5069-L330ER, 5069-L330ERM, 5069-L330ERMK, 5069-L340ER, 5069-L340ERM, 5069-L340ERP, 5069-L350ERM, 5069-L350ERMK, 5069-L380ERM, 5069-L3100ERM
ESD immunity IEC 61000-4-2	6 kV contact discharges 8 kV air discharges
Radiated RF immunity IEC 61000-4-3	10V/m with 1 kHz sine-wave 80% AM from 80...2000 MHz 10V/m with 200 Hz 50% Pulse 100% AM @ 900 MHz 10V/m with 200 Hz 50% Pulse 100% AM @ 1890 MHz 3V/m with 1 kHz sine-wave 80% AM from 2000...2700 MHz
EFT/B immunity IEC 61000-4-4	± 4 kV at 5 kHz on power ports ± 2 kV at 5 kHz on Ethernet ports
Surge transient immunity IEC 61000-4-5	± 1 kV line-line (DM) and ± 2 kV line-earth (CM) on power ports ± 2 kV line-earth (CM) on Ethernet ports
Conducted RF immunity IEC 61000-4-6	10V rms with 1 kHz sine-wave 80% AM from 150 kHz...80 MHz
Voltage variation IEC 61000-4-29	10 ms interruption on MOD Power port

Certifications - CompactLogix 5380 Controllers

Certification(1)	5069-L306ER, 5069-L306ERM, 5069-L310ER, 5069-L310ER-NSE, 5069-L310ERM, 5069-L320ER, 5069-L320ERM, 5069-L320ERMK, 5069-L320ERP, 5069-L330ER, 5069-L330ERM, 5069-L330ERMK, 5069-L340ER, 5069-L340ERM, 5069-L340ERP, 5069-L350ERM, 5069-L350ERMK, 5069-L380ERM, 5069-L3100ERM
c-UL-us	UL Listed Industrial Control Equipment, certified for US and Canada. See UL File E65584. UL Listed for Class I, Division 2 Group A,B,C,D Hazardous Locations, certified for U.S. and Canada. See UL File E194810.
CE	European Union 2014/30/EU EMC Directive, compliant with: • EN 61326-1; Meas./Control/Lab., Industrial Requirements • EN 61000-6-2; Industrial Immunity • EN 61000-6-4; Industrial Emissions • EN 61131-2; Programmable Controllers (Clause 8, Zone A & B) European Union 2014/35/EU LVD, compliant with: • EN 61010-2-201; Control Equipment Safety Requirements European Union 2011/65/EU RoHS, compliant with: • EN 50581; Technical documentation
RCM	Australian Radiocommunications Act, compliant with: • EN 61000-6-4; Industrial Emissions
Ex	European Union 2014/34/EU ATEX Directive, compliant with: • EN 60079-0; General Requirements • EN 60079-15; Potentially Explosive Atmospheres, Protection "n" • II 3 G Ex nA IIC T4 Gc • DEMKO 15 ATEX 1455X when used at or below 125V AC
IECEx	IECEx System, compliant with: • IEC 600079-0: General Requirements • IEC 60079-15; Potentially Explosive Atmospheres, Protection "n" • II 3 G Ex nA IIC T4 Gc • IECEx UL 15.0007X when used at or below 125V AC
KC	Korean Registration of Broadcasting and Communications Equipment, compliant with: • Article 58-2 of Radio Waves Act, Clause 3 **IMPORTANT**: This certification does not apply to the following catalog numbers: 5069-L320ERMK, 5069-L330ERMK, 5069-L350ERMK
EAC	Russian Customs Union TR CU 020/2011 EMC Technical Regulation
EtherNet/IP	ODVA conformance tested to EtherNet/IP specifications

(1) See the Product Certification link at http://www.ab.com for Declarations of Conformity, Certificates, and other certification details.

Compact GuardLogix 5380 Controllers

Compact GuardLogix® 5380 controllers are part of the Logix 5000 family of controllers. The controllers provide a scalable controller solution to address a wide variety of applications. The applications range from standalone systems to more complex systems with devices that are connected to the controller via an EtherNet/IP network.

The controllers can function in the same way as CompactLogix 5380 controllers and also provide the functionality to perform safety functions. A major benefit of this system is that it is still one project, safety and standard together.

The Compact GuardLogix SIL 2 Controllers can achieve up to SIL 2/PLd (Category 3) with the use of the safety task and safety I/O.

The Compact GuardLogix SIL 3 Controllers, based on a 1oo2 design, and can achieve up to SIL 3/PLe (Category 4) with the use of the safety task and safety I/O.

During development, safety and standard have the same rules; multiple programmers, online editing, and forcing are all allowed. Once the safety system is validated and the safety signature applied, safety memory is protected, the safety logic cannot be modified, and all safety functions operate with a safety integrity of up to SIL 2 for Compact GuardLogix SIL 2 controllers, and up to SIL 3 for Compact GuardLogix SIL 3 controllers.

The controllers are mounted on a DIN rail. They can monitor and control local and remote I/O modules, and other devices connected to an EtherNet/IP network. The controllers support this functionality:

- Use of Compact 5000 I/O standard and safety modules as local I/O and remote I/O modules.
- Use Compact 5000 I/O modules, and other I/O modules, as remote I/O modules.
- Support for Integrated Motion over an EtherNet/IP network (not all controllers).
- Use of Dual-IP mode or Linear/DLR mode.
- Use of two Ethernet ports that let the controller connect to EtherNet/IP device-level and enterprise-level networks.
- Use of 1784-SD1, 1784-SD2, 1784-SDHC8, 1784-SDHC32, 9509-CMSDCD4 Secure Digital (SD) card for nonvolatile memory.
- USB programming port for temporary connection.

Compact GuardLogix 5380 controllers are available with a conformal coating. The conformal coating provides a layer of protection against contaminants and humidity to help protect the assembly and extend product life in harsh, corrosive environments. Products with a conformal coating have a 'K' suffix at the end of the catalog number.

Compact GuardLogix SIL 2 Controllers

Features - Compact GuardLogix 5380 SIL 2 Controllers

Feature	5069-L306ERS2 5069-L306ERMS2	5069-L310ERS2 5069-L310ERMS2	5069-L320ERS2 5069-L320ERMS2 5069-L320ERS2K 5069-L320ERMS2K	5069-L330ERS2 5069-L330ERMS2 5069-L330ERS2K 5069-L330ERMS2K	5069-L340ERS2 5069-L340ERMS2	5069-L350ERS2 5069-L350ERMS2 5069-L350ERS2K 5069-L350ERMS2K	5069-L380ERS2 5069-L380ERMS2	5069-L3100ERS2 5069-L3100ERMS2
Controller tasks • Continuous • Periodic • Event	31 standard tasks, 1 safety task 1000 programs/task All event triggers							
Built-in communication ports	1 USB port 2 Ethernet ports **IMPORTANT**: Consider the following: – When the controller operates in Dual-IP mode, each Ethernet port requires a unique IP address. – When the controller operates in Linear/DLR mode, the controller uses only one IP address.							
USB port communication	USB 2.0, Type B Full speed (12 Mbps) Programming, configuration, firmware update, and online edits only							
Ethernet performance	10 Mbps, 100 Mbps, 1 Gbps Full-duplex only							
I/O Capacity (Class 0/1) (1)	128,000 packets/second							
Message Rate Capacity HMI/MSG (Class 3)(1)	2000 messages/second							
EtherNet/IP modes supported	Dual-IP mode Linear/DLR mode							
EtherNet/IP network topologies supported	DLR Star Linear							
EtherNet/IP nodes supported, max	16	24	40	60	90	120	150	180
Socket interfaces supported, max	32							
Integrated motion(2)								
Number of axes supported, max(3)	256							
Number of CIP Drive axes (Position loop-configured) supported, max(4)	5069-L306ERMS2: 2	5069-L310ERMS2: 4	5069-L320ERMS2: 8	5069-L330ERMS2, 5069-L330ERMS2K: 16	5069-L340ERMS2: 20	5069-L350ERMS2, 5069-L350ERMS2K: 24	5069-L380ERMS2: 28	5069-L3100ERMS2: 32
Programming languages	Ladder Diagram (LD) Structured Text (ST) Function Block Diagram (FBD) Sequential Function Chart (SFC) Safety Task supports only RLL and the additional safety application instructions							

(1) I/O numbers are maximums; they assume no HMI/MSG. HMI/MSG numbers are maximums, they assume no I/O. Maximums assume the processor is target, not originator. Packet rates vary depending on packet size. For more details, see Troubleshoot EtherNet/IP Application Technique, publication ENET-AT003, and the EDS file for a specific catalog number. .

(2) Only controllers that have an M in their catalog number support Integrated Motion on EtherNet/IP networks.

(3) Any combination of CIP Drive, Virtual, Consumed, Regenerative AC/DC Converter and Non-Regenerative AC/DC Converter axis types.

(4) The maximum number of CIP Drive axes (configured for Position Loop) that can be included in the total integrated motion axes count for a controller.

Technical Specifications - Compact GuardLogix 5380 SIL 2 Controllers

Attribute	5069-L306ERS2 5069-L306ERMS2	5069-L310ERS2 5069-L310ERMS2	5069-L320ERS2 5069-L320ERMS2 5069-L320ERS2K 5069-L320ERMS2K	5069-L330ERS2 5069-L330ERMS2 5069-L330ERS2K 5069-L330ERMS2K	5069-L340ERS2 5069-L340ERMS2	5069-L350ERS2 5069-L350ERMS2 5069-L350ERS2K 5069-L350ERMS2K	5069-L380ERS2 5069-L380ERMS2	5069-L3100ERS2 5069-L3100ERMS2
User memory	0.6 MB	1 MB	2 MB	3 MB	4 MB	5 MB	8 MB	10 MB
Safety memory	0.3 MB	0.5 MB	1 MB	1.5 MB	2 MB	2.5 MB	4 MB	5 MB
Optional nonvolatile memory	• 1784-SD1 (1 GB) • 1784-SD2 (2 GB), ships with controller • 1784-SDHC8 (8 GB) • 1784-SDHC32 (32 GB) 9509-CMSDCD4 (4 GB) CodeMeter CmCard card							
Local I/O modules, max	8	8	16	31	31	31	31	31
MOD Power voltage range	18...32V DC SELV/PELV(1)							
MOD Power current, max	475 mA							
MOD Power inrush	1200 mA for 125 ms							
MOD Power passthrough voltage range (2)	18...32V DC @ 4.525 A							
MOD Power current rating, max	5 A Do not exceed 5 A current draw at the MOD Power RTB.							
SA Power voltage ranges(3)	0...32V DC SELV/PELV(1)							
SA Power current, max(3)	10 mA (DC power)							
SA Power passthrough voltage ranges(3), (4)	0...32V DC @ 9.99 A							
SA Power current rating, max(3)	10 A (DC power) Do not exceed 10 A current draw at the SA Power RTB.							
Power dissipation, max	9.0 W							
Thermal dissipation, max	30.9 BTU/hr							
Isolation voltage	300V (continuous), Basic Insulation Type, SA and MOD Power to Backplane 300V (continuous), Basic Insulation Type, SA to MOD Power 300V (continuous), Basic Insulation Type, Ethernet to Backplane 300V (continuous), Double Insulation Type, Ethernet to MOD Power 300V (continuous), Double Insulation Type, Ethernet to SA Power 50V (continuous), Functional Insulation Type, Ethernet to USB 300V (continuous), Basic Insulation Type, USB to Backplane 300V (continuous), Double Insulation Type, USB to MOD Power 300V (continuous), Double Insulation Type, USB to SA Power No isolation between Ethernet ports Type tested at 1500V AC for 60 seconds							
Weight, approx	0.768 kg (1.693 lb)							
Dimensions(HxWxD), approx	143.97 x 98.10 x 136.81 mm (5.67 x 3.86 x 5.39 in.)							
Location	DIN rail mount (horizontal mount only)							
DIN rail	Compatible zinc-plated, chromate steel DIN rail. EN50022 - 35 x 7.5 mm (1.38 x 0.30 in.)							
Removable terminal block	RTBs are available in separately ordered 5069 RTB kits. The MOD power connection uses a 4-point RTB, and the SA power connection uses a 6-point RTB. The following kits are available: • Kit catalog number 5069-RTB64-SCREW contains RTB catalog numbers 5069-RTB6-SCREW and 5069-RTB4-SCREW • Kit catalog number 5069-RTB64-SPRING contains RTB catalog numbers 5069-RTB6-SPRING and 5069-RTB4-SPRING							
Terminal block torque	5069-RTB4-SCREW & 5069-RTB6-SCREW: 0.4 N•m (3.5 lb•in) 5069-RTB4-SPRING & 5069-RTB6-SPRING: Torque does not apply							
Wire size	5069-RTB4-SCREW, 5069-RTB6-SCREW connections: 0.5...1.5 mm^2 (22...16 AWG) solid or stranded copper wire rated at 105 °C (221 °F), or greater, 3.5 mm (0.14 in.) max diameter including insulation, single wire connection only 5069-RTB4-SPRING, 5069-RTB6-SPRING connections: 0.5...1.5 mm^2 (22...16 AWG) solid or stranded copper wire rated at 105 °C (221 °F), or greater, 2.9 mm (0.11 in.) max diameter including insulation, single wire connection only Ethernet connections: Ethernet Cabling and Installation according to IEC 61918 and IEC 61784-5-2							
Insulation stripping length	5069-RTB4-SCREW, 5069-RTB6-SCREW connections: 12 mm (0.47 in.) 5069-RTB4-SPRING, 5069-RTB6-SPRING connections: 10 mm (0.39 in.)							

Technical Specifications - Compact GuardLogix 5380 SIL 2 Controllers (Continued)

Attribute	5069-L306ERS2 5069-L306ERMS2	5069-L310ERS2 5069-L310ERMS2	5069-L320ERS2 5069-L320ERMS2 5069-L320ERS2K 5069-L320ERMS2K	5069-L330ERS2 5069-L330ERMS2 5069-L330ERS2K 5069-L330ERMS2K	5069-L340ERS2 5069-L340ERMS2	5069-L350ERS2 5069-L350ERMS2 5069-L350ERS2K 5069-L350ERMS2K	5069-L380ERS2 5069-L380ERMS2	5069-L3100ERS2 5069-L3100ERMS2
Wire category(5)	3 - on USB port 1 - on power ports 2 - on Ethernet ports							
Enclosure	None (open-style)							
North American temperature code	T4							
ATEX temperature code	T4							
IECEx temperature code	T4							

(1) For Functional Safety applications, SELV/PELV power supplies are required for both MOD power and SA power.
(2) Maximum level of MOD Power current that the controller can pass through to the next module in the system. The specific level of current passed through varies based on system configuration.
(3) SA power specifications are based on the number and type of Compact 5000 I/O modules that are used in the system. For example, if the set of I/O modules that are used in a Compact GuardLogix 5380 controller system includes modules that use AC SA power, you must include a 5069-FPD field potential distributor in the system. In a Compact GuardLogix 5380 controller system, modules that use AC SA power must be installed to the right of a 5069-FPD field potential distributor.
(4) Maximum level of SA Power current that the controller can pass through to the next module in the system. The specific level of current passed through varies based on system configuration.
(5) Use this Conductor Category information for planning conductor routing. See the Industrial Automation Wiring and Grounding Guidelines, publication 1770-4.1.

Environmental Specifications - Compact GuardLogix 5380 SIL 2 Controllers

Attribute	5069-L306ERS2, 5069-L306ERMS2, 5069-L310ERS2, 5069-L310ERMS2,5069-L320ERS2, 5069-L320ERMS2, 5069-L330ERS2, 5069-L330ERMS2, 5069-L340ERS2, 5069-L340ERMS2, 5069-L350ERS2, 5069-L350ERMS2, 5069-L380ERS2, 5069-L380ERMS2, 5069-L3100ERS2, 5069-L3100ERMS2, 5069-L320ERS2K, 5069-L320ERMS2K, 5069-L330ERS2K, 5069-L330ERMS2K, 5069-L350ERS2K, 5069-L350ERMS2K
Temperature, operating IEC 60068-2-1 (Test Ad, Operating Cold), IEC 60068-2-2 (Test Bd, Operating Dry Heat), IEC 60068-2-14 (Test Nb, Operating Thermal Shock)	0 °C < Ta < +60 °C (+32 °F < Ta < +140 °F) For specific controller details, see Controller Minimum Spacing Requirements on page 20.
Temperature, nonoperating IEC 60068-2-1 (Test Ab, Unpackaged Nonoperating Cold), IEC 60068-2-2 (Test Bb, Unpackaged Nonoperating Dry Heat), IEC 60068-2-14 (Test Na, Unpackaged Nonoperating Thermal Shock)	-40...+85 °C (-40...+185 °F)
Temperature, surrounding air, max	60 °C (140 °F)
Relative humidity IEC 60068-2-30 (Test Db, Unpackaged Damp Heat)	5...95% noncondensing
Vibration IEC 60068-2-6 (Test Fc, Operating)	5 g @ 10...500 Hz
Shock, operating IEC 60068-2-27 (Test Ea, Unpackaged Shock)	30 g
Shock, nonoperating IEC 60068-2-27 (Test Ea, Unpackaged Shock)	50 g
Emissions	IEC 61000-6-4
ESD immunity IEC 61000-4-2	6 kV contact discharges 8 kV air discharges
Radiated RF immunity IEC 61000-4-3	10V/m with 1 kHz sine-wave 80% AM from 80...2000 MHz 10V/m with 200 Hz 50% Pulse 100% AM @ 900 MHz 10V/m with 200 Hz 50% Pulse 100% AM @ 1890 MHz 3V/m with 1 kHz sine-wave 80% AM from 2000...2700 MHz 3V/m with 1 kHz sine-wave 80% AM from 2700...6000 MHz
EFT/B immunity IEC 61000-4-4	± 4 kV at 5 kHz on power ports ± 2 kV at 5 kHz on Ethernet ports
Surge transient immunity IEC 61000-4-5	± 1 kV line-line (DM) and ± 2 kV line-earth (CM) on power ports ± 2 kV line-earth (CM) on Ethernet ports
Conducted RF immunity IEC 61000-4-6	10V rms with 1 kHz sine-wave 80% AM from 150 kHz...80 MHz
Voltage variation IEC 61000-4-29	10 ms interruption on MOD Power port

Certifications - Compact GuardLogix 5380 SIL 2 Controllers

Certification[1]	5069-L306ERS2, 5069-L306ERMS2, 5069-L310ERS2, 5069-L310ERMS2,5069-L320ERS2, 5069-L320ERMS2, 5069-L330ERS2, 5069-L330ERMS2, 5069-L340ERS2, 5069-L340ERMS2, 5069-L350ERS2, 5069-L350ERMS2, 5069-L380ERS2, 5069-L380ERMS2, 5069-L3100ERS2, 5069-L3100ERMS2, 5069-L320ERS2K, 5069-L320ERMS2K, 5069-L330ERS2K, 5069-L330ERMS2K, 5069-L350ERS2K, 5069-L350ERMS2K
c-UL-us	UL Listed Industrial Control Equipment, certified for US and Canada. See UL File E65584. UL Listed for Class I, Division 2 Group A,B,C,D Hazardous Locations, certified for U.S. and Canada. See UL File E194810.
CE	European Union 2014/30/EU EMC Directive, compliant with: • EN 61326-1; Meas./Control/Lab., Industrial Requirements • EN 61000-6-2; Industrial Immunity • EN 61000-6-4; Industrial Emissions • EN 61131-2; Programmable Controllers (Clause 8, Zone A & B) European Union 2014/35/EU LVD, compliant with: • EN 61010-2-201; Control Equipment Safety Requirements European Union 2006/42/EC MD, compliant with: • EN 60204-1; Electrical equipment of machines • EN ISO 13849-1; Safety-related parts of control systems • EN 62061; Functional safety of safety-related control systems • Cat. 3/PL d according to EN ISO 13849-1, and SIL 2 according to EN 62061/IEC 61508 • TÜV 01/205/5632 European Union 2011/65/EU RoHS, compliant with: • EN 50581; Technical documentation
RCM	Australian Radiocommunications Act, compliant with: • EN 61000-6-4; Industrial Emissions
Ex	European Union 2014/34/EU ATEX Directive, compliant with: • EN 60079-0; General Requirements • EN 60079-15; Potentially Explosive Atmospheres, Protection "n" • II 3 G Ex nA IIC T4 Gc • DEMKO17ATEX1976X
IECEx	IECEx System, compliant with: • IEC 600079-0: General Requirements • IEC 60079-15; Potentially Explosive Atmospheres, Protection "n" • II 3 G Ex nA IIC T4 Gc • IECEx UL 17.0122X
TÜV	TÜV Certified for Functional Safety[2]: • Capable of SIL 2, CAT. 3/PL d
KC	Korean Registration of Broadcasting and Communications Equipment, compliant with: • Article 58-2 of Radio Waves Act, Clause 3
EAC	Russian Customs Union TR CU 020/2011 EMC Technical Regulation
EtherNet/IP	ODVA conformance tested to EtherNet/IP specifications

(1) See the Product Certification link at http://www.ab.com for Declarations of Conformity, Certificates, and other certification details.

(2) When used with specified firmware revisions.
See the Product Safety Certificate at http://www.rockwellautomation.com/global/certification/overview.page for a full list of safety-related certifications.

Compact GuardLogix SIL 3 Controllers

Features - Compact GuardLogix 5380 SIL 3 Controllers

Feature	5069-L306ERMS3	5069-L310ERMS3	5069-L320ERMS3 5069-L320ERMS3K	5069-L330ERMS3 5069-L330ERMS3K	5069-L340ERMS3	5069-L350ERMS3 5069-L350ERMS3K	5069-L380ERMS3	5069-L3100ERMS3
Controller tasks • Continuous • Periodic • Event	31 standard tasks, 1 safety task 1000 programs/task All event triggers							
Built-in communication ports	1 USB port 2 Ethernet ports **IMPORTANT**: Consider the following: – When the controller operates in Dual-IP mode, each Ethernet port requires a unique IP address. – When the controller operates in Linear/DLR mode, the controller uses only one IP address.							
USB port communication	USB 2.0, Type B Full speed (12 Mbps) Programming, configuration, firmware update, and online edits only							
Ethernet performance	10 Mbps, 100 Mbps, 1 Gbps Full-duplex only							
EtherNet/IP modes supported	Dual-IP mode Linear/DLR mode							
I/O Capacity (Class 0/1) (1)	128,000 packets/second							
Message Rate Capacity HMI/MSG (Class 3)(1)	2000 messages/second							
EtherNet/IP network topologies supported	DLR Star Linear							
EtherNet/IP nodes supported, max	16	24	40	60	90	120	150	180
Socket interfaces supported, max	32							
Integrated motion(2)								
Number of axes supported, max(3)	256							
Number of CIP Drive axes (Position loop-configured) supported, max(4)	2	4	8	16	20	24	28	32
Programming languages	Ladder Diagram (LD) Structured Text (ST) Function Block Diagram (FBD) Sequential Function Chart (SFC) Safety Task supports only RLL and the additional safety application instructions							

(1) I/O numbers are maximums; they assume no HMI/MSG. HMI/MSG numbers are maximums, they assume no I/O. Maximums assume the processor is target, not originator. Packet rates vary depending on packet size. For more details, see Troubleshoot EtherNet/IP Application Technique, publication ENET-AT003, and the EDS file for a specific catalog number. .

(2) Only controllers that have an M in their catalog number support Integrated Motion on EtherNet/IP networks.

(3) Any combination of CIP Drive, Virtual, Consumed, Regenerative AC/DC Converter and Non-Regenerative AC/DC Converter axis types.

(4) The maximum number of CIP Drive axes (configured for Position Loop) that can be included in the total integrated motion axes count for a controller.

Technical Specifications - Compact GuardLogix 5380 SIL 3 Controllers

Attribute	5069-L306ERMS3	5069-L310ERMS3	5069-L320ERMS3 5069-L320ERMS3K	5069-L330ERMS3 5069-L330ERMS3K	5069-L340ERMS3	5069-L350ERMS3 5069-L350ERMS3K	5069-L380ERMS3	5069-L3100ERMS3
User memory	0.6 MB	1 MB	2 MB	3 MB	4 MB	5 MB	8 MB	10 MB
Safety memory	0.3 MB	0.5 MB	1 MB	1.5 MB	2 MB	2.5 MB	4 MB	5 MB
Optional nonvolatile memory	• 1784-SD1 (1 GB) • 1784-SD2 (2 GB), ships with controller • 1784-SDHC8 (8 GB) • 1784-SDHC32 (32 GB) • 9509-CMSDCD4 (4 GB) CodeMeter CmCard card							
Local I/O modules, max	8	8	16	31	31	31	31	31
MOD Power voltage range	18...32V DC SELV/PELV(1)							
MOD Power current, max	950 mA							
MOD Power inrush	2.375 A							
MOD Power passthrough voltage range (2)	18...32V DC @ 4.05 A							
MOD Power current rating, max	5 A Do not exceed 5 A current draw at the MOD Power RTB.							
SA Power voltage ranges(3)	0...32V DC SELV/PELV(1)							
SA Power current, max(3)	10 mA (DC power)							
SA Power passthrough voltage ranges(3), (4)	0...32V DC @ 9.99 A							
SA Power current rating, max(3)	10 A (DC power) Do not exceed 10 A current draw at the SA Power RTB.							
Power dissipation, max	18.0 W							
Thermal dissipation, max	18.0 W							
Isolation voltage	300V (continuous), Basic Insulation Type, SA and MOD Power to Backplane 300V (continuous), Basic Insulation Type, SA to MOD Power 300V (continuous), Basic Insulation Type, Ethernet to Backplane 300V (continuous), Double Insulation Type, Ethernet to MOD Power 300V (continuous), Double Insulation Type, Ethernet to SA Power 50V (continuous), Functional Insulation Type, Ethernet to USB 300V (continuous), Basic Insulation Type, USB to Backplane 300V (continuous), Double Insulation Type, USB to MOD Power 300V (continuous), Double Insulation Type, USB to SA Power No isolation between Ethernet ports Type tested at 1500V AC for 60 seconds							
Weight, approx	1.2 kg (2.645 lb)							
Dimensions (HxWxD), approx	143.71 x 153.5 x 136.81 mm (5.65 x 6.04 x 5.39 in.)							
Location	DIN rail mount (horizontal mount only)							
DIN rail	Compatible zinc-plated, chromate steel DIN rail. EN50022 - 35 x 7.5 mm (1.38 x 0.30 in.)							
Removable terminal block	RTBs are available in separately ordered 5069 RTB kits. The MOD power connection uses a 4-point RTB, and the SA power connection uses a 6-point RTB. The following kits are available: • Kit catalog number 5069-RTB64-SCREW contains RTB catalog numbers 5069-RTB6-SCREW and 5069-RTB4-SCREW • Kit catalog number 5069-RTB64-SPRING contains RTB catalog numbers 5069-RTB6-SPRING and 5069-RTB4-SPRING							
Terminal block torque	5069-RTB4-SCREW & 5069-RTB6-SCREW: 0.4 N•m (3.5 lb•in) 5069-RTB4-SPRING & 5069-RTB6-SPRING: Torque does not apply							
Wire size	5069-RTB4-SCREW, 5069-RTB6-SCREW connections: 0.5...1.5 mm^2 (22...16 AWG) solid or stranded copper wire rated at 105 °C (221 °F), or greater, 3.5 mm (0.14 in.) max diameter including insulation, single wire connection only 5069-RTB4-SPRING, 5069-RTB6-SPRING connections: 0.5...1.5 mm^2 (22...16 AWG) solid or stranded copper wire rated at 105 °C (221 °F), or greater, 2.9 mm (0.11 in.) max diameter including insulation, single wire connection only Ethernet connections: Ethernet Cabling and Installation according to IEC 61918 and IEC 61784-5-2							
Insulation stripping length	5069-RTB4-SCREW, 5069-RTB6-SCREW connections: 12 mm (0.47 in.) 5069-RTB4-SPRING, 5069-RTB6-SPRING connections: 10 mm (0.39 in.)							
Wire category(5)	3 - on USB port 1 - on power ports 2 - on Ethernet ports							
Enclosure	None (open-style)							

Technical Specifications - Compact GuardLogix 5380 SIL 3 Controllers (Continued)

Attribute	5069-L306ERMS3	5069-L310ERMS3	5069-L320ERMS3 5069-L320ERMS3K	5069-L330ERMS3 5069-L330ERMS3K	5069-L340ERMS3	5069-L350ERMS3 5069-L350ERMS3K	5069-L380ERMS3	5069-L3100ERMS3
North American temperature code	T4							
ATEX temperature code	T4							
IECEx temperature code	T4							

(1) For Functional Safety applications, SELV/PELV power supplies are required for both MOD power and SA power.
(2) Maximum level of MOD Power current that the controller can pass through to the next module in the system. The specific level of current passed through varies based on system configuration.
(3) SA power specifications are based on the number and type of Compact 5000 I/O modules that are used in the system. For example, if the set of I/O modules that are used in a Compact GuardLogix 5380 controller system includes modules that use AC SA power, you must include a 5069-FPD field potential distributor in the system. In a Compact GuardLogix 5380 controller system, modules that use AC SA power must be installed to the right of a 5069-FPD field potential distributor.
(4) Maximum level of SA Power current that the controller can pass through to the next module in the system. The specific level of current passed through varies based on system configuration.
(5) Use this Conductor Category information for planning conductor routing. See the Industrial Automation Wiring and Grounding Guidelines, publication 1770-4.1.

Environmental Specifications - Compact GuardLogix 5380 SIL 3 Controllers

Attribute	5069-L306ERMS3, 5069-L310ERMS3, 5069-L320ERMS3, 5069-L320ERMS3K, 5069-L330ERMS3, 5069-L330ERMS3K, 5069-L340ERMS3, 5069-L350ERMS3, 5069-L350ERMS3K, 5069-L380ERMS3, 5069-L3100ERMS3
Temperature, operating IEC 60068-2-1 (Test Ad, Operating Cold), IEC 60068-2-2 (Test Bd, Operating Dry Heat), IEC 60068-2-14 (Test Nb, Operating Thermal Shock)	0 °C < Ta < +60 °C (+32 °F < Ta < +140 °F) For specific controller details, see Controller Minimum Spacing Requirements on page 20.
Temperature, nonoperating IEC 60068-2-1 (Test Ab, Unpackaged Nonoperating Cold), IEC 60068-2-2 (Test Bb, Unpackaged Nonoperating Dry Heat), IEC 60068-2-14 (Test Na, Unpackaged Nonoperating Thermal Shock)	-40...+85 °C (-40...+185 °F)
Temperature, surrounding air, max	60 °C (140 °F)
Relative humidity IEC 60068-2-30 (Test Db, Unpackaged Damp Heat)	5...95% noncondensing
Vibration IEC 60068-2-6 (Test Fc, Operating)	5 g @ 10...500 Hz
Shock, operating IEC 60068-2-27 (Test Ea, Unpackaged Shock)	30 g
Shock, nonoperating IEC 60068-2-27 (Test Ea, Unpackaged Shock)	50 g
Emissions	IEC 61000-6-4
ESD immunity IEC 61000-4-2	6 kV contact discharges 8 kV air discharges
Radiated RF immunity IEC 61000-4-3	10V/m with 1 kHz sine-wave 80% AM from 80...2000 MHz 10V/m with 200 Hz 50% Pulse 100% AM @ 900 MHz 10V/m with 200 Hz 50% Pulse 100% AM @ 1890 MHz 3V/m with 1 kHz sine-wave 80% AM from 2000...2700 MHz 3V/m with 1 kHz sine-wave 80% AM from 2700...6000 MHz
EFT/B immunity IEC 61000-4-4	± 4 kV at 5 kHz on power ports ± 2 kV at 5 kHz on Ethernet ports
Surge transient immunity IEC 61000-4-5	± 1 kV line-line (DM) and ± 2 kV line-earth (CM) on power ports ± 2 kV line-earth (CM) on Ethernet ports
Conducted RF immunity IEC 61000-4-6	10V rms with 1 kHz sine-wave 80% AM from 150 kHz...80 MHz
Voltage variation IEC 61000-4-29	10 ms interruption on MOD Power port

Certifications - Compact GuardLogix 5380 SIL 3 Controllers

Certification[1]	5069-L306ERMS3, 5069-L310ERMS3, 5069-L320ERMS3, 5069-L320ERMS3K, 5069-L330ERMS3, 5069-L330ERMS3K, 5069-L340ERMS3, 5069-L350ERMS3, 5069-L350ERMS3K, 5069-L380ERMS3, 5069-L3100ERMS3
c-UL-us	UL Listed Industrial Control Equipment, certified for US and Canada. See UL File E322657. UL Listed for Class I, Division 2 Group A,B,C,D Hazardous Locations, certified for U.S. and Canada. See UL File E334470.
CE	European Union 2014/30/EU EMC Directive, compliant with: • EN 61326-1; Meas./Control/Lab., Industrial Requirements • EN 61000-6-2; Industrial Immunity • EN 61000-6-4; Industrial Emissions • EN 61131-2; Programmable Controllers (Clause 8, Zone A & B) European Union 2014/35/EU LVD, compliant with: • EN 61010-2-201; Control Equipment Safety Requirements European Union 2006/42/EC MD, compliant with: • EN 60204-1; Electrical equipment of machines • EN ISO 13849-1; Safety-related parts of control systems • EN 62061; Functional safety of safety-related control systems • Cat. 4/PL e according to EN ISO 13849-1, and SIL 3 according to EN62061/IEC61508 • TÜV 01/205/5775.00/20 European Union 2011/65/EU RoHS, compliant with: • EN 50581; Technical documentation
RCM	Australian Radiocommunications Act, compliant with: • EN 61000-6-4; Industrial Emissions
Ex	European Union 2014/34/EU ATEX Directive, compliant with: • EN 60079-0; General Requirements • EN 60079-15; Potentially Explosive Atmospheres, Protection "n" • II 3 G Ex nA IIC T4 Gc • DEMKO19ATEX2261X
IECEx	IECEx System, compliant with: • IEC 600079-0: General Requirements • IEC 60079-15; Potentially Explosive Atmospheres, Protection "n" • II 3 G Ex nA IIC T4 Gc • IECEx UL 19.0081X
TÜV	TÜV Certified for Functional Safety[2]: • Capable of SIL 3, CAT. 4/PL e
KC	Korean Registration of Broadcasting and Communications Equipment, compliant with: • Article 58-2 of Radio Waves Act, Clause 3
EAC	Russian Customs Union TR CU 020/2011 EMC Technical Regulation
EtherNet/IP	ODVA conformance tested to EtherNet/IP specifications

(1) See the Product Certification link at http://www.ab.com for Declarations of Conformity, Certificates, and other certification details.

(2) When used with specified firmware revisions.
See the Product Safety Certificate at http://www.rockwellautomation.com/global/certification/overview.page for a full list of safety-related certifications.

CompactLogix 5480 Controllers

The CompactLogix 5480 controllers are part of the Logix 5000 family of controllers. The controllers are real-time controllers with Windows 10 IoT Enterprise commercial operating system (COS) running in parallel to the Logix control engine.

The CompactLogix 5480 controllers deliver scalable control that is ideal for mid-size to large applications that require high-performance control and data throughput. The CompactLogix 5480 controllers also provide a truly integrated motion solution.

The controllers are mounted on a DIN rail. They can monitor and control local and remote I/O modules, and other devices connected to an EtherNet/IP network. The CompactLogix 5480 controllers support the following functionality for use with the control engine:

- Use of Compact 5000 I/O module as local I/O modules.
- Use Compact 5000 I/O modules, and other I/O modules, as remote I/O modules.
- Support for Integrated Motion over an EtherNet/IP network.
- Use of three Ethernet ports that can connect to enterprise-level and device-level EtherNet/IP networks, including star, linear, and DLR EtherNet/IP network topologies.
- Support for Linear/DLR and Dual-IP mode.
- Use of USB port for firmware updates and programming.
- Use of 1784-SD1, 1784-SD2, 1784-SDHC8, 1784-SDHC32, 9509-CMSDCD4 Secure Digital (SD) card for nonvolatile memory.

The COS lets you perform tasks on the controller that must be performed on an external workstation in other Logix 5000 control systems. The CompactLogix 5480 controllers come with following for use in Windows-based applications:

- Embedded Ethernet port to connect the COS to an EtherNet/IP network or Enterprise network.
- Two USB 3.0 ports to connect peripherals such as a keyboard and mouse.
- DisplayPort to connect a monitor.
- Support for the installation and use of Rockwell Automation® applications, such as FactoryTalk® View Site Edition.

Features - CompactLogix 5480 Controllers

Feature	5069-L430ERMW	5069-L450ERMW	5069-4100ERMW	5069-L4200ERMW
Controller tasks • Continuous • Periodic • Event	32 tasks 1000 programs/task All event triggers			
Built-in communication ports	Logix control engine use: • 3 - Ethernet, 10 Mbps/100 Mbps/1 Gbps • 1- USB client **IMPORTANT**: Consider the following: • When the controller operates in Dual-IP mode, each Ethernet port requires a unique IP address. • When the controller operates in Linear/DLR mode, the controller DLR pair uses only one IP address. Windows 10 use: • 1 - Ethernet, 10 Mbps/100 Mbps/1 Gbps			
USB port communication	Logix control engine use: • USB 2.0, Type B • Full speed (480 Mbps) • Programming, configuration, firmware update, and online edits only Windows 10 use: • 2 - USB 3.0 ports to connect peripherals such as a keyboard and mouse			
Ethernet performance	10 Mbps, 100 Mbps, 1 Gbps Full-duplex only			
I/O Capacity (Class 0/1) (1)	128,000 packets/second			
Message Rate Capacity HMI/MSG (Class 3)(1)	2000 messages/second			
EtherNet/IP modes supported	Dual-IP mode Linear/DLR mode			
EtherNet/IP network topologies supported	DLR Star Linear			
EtherNet/IP nodes supported, max	60	120	180	250
Socket interfaces supported, max	32			

Features - CompactLogix 5480 Controllers (Continued)

Feature	5069-L430ERMW	5069-L450ERMW	5069-4100ERMW	5069-L4200ERMW
Integrated motion				
Number of axes supported, max(2)	512			
Number of CIP Drive axes (Position loop-configured) supported, max(3)	16	24	32	150
Programming languages	Ladder Diagram (LD) Structured Text (ST) Function Block Diagram (FBD) Sequential Function Chart (SFC)			

(1) I/O numbers are maximums; they assume no HMI/MSG. HMI/MSG numbers are maximums, they assume no I/O. Maximums assume the processor is target, not originator. Packet rates vary depending on packet size. For more details, see Troubleshoot EtherNet/IP Application Technique, publication ENET-AT003, and the EDS file for a specific catalog number. .

(2) Any combination of CIP Drive, Virtual, Consumed, Regenerative AC/DC Converter and Non-Regenerative AC/DC Converter axis types.

(3) The maximum number of CIP Drive axes (configured for Position Loop) that can be included in the total integrated motion axes count for a controller.

Technical Specifications - CompactLogix 5480 Controller

Attribute	5069-L430ERMW	5069-L450ERMW	5069-L4100ERMW	5069-L4200ERMW
User memory				
Windows 10 (COS on controller)	• RAM - 6 GB • SSD: 64 GB			
Logix control engine	3 MB	5 MB	10 MB	20 MB
Optional nonvolatile memory	1784-SD1 (1 GB) 1784-SD2 (2 GB), ships with controller 1784-SDHC8 (8 GB) 1784-SDHC32 (32 GB) 9509-CMSDCD4 (4 GB) CodeMeter CmCard card			
Local I/O modules, max	31			
MOD Power voltage range	18...32V DC			
MOD Power power, max	72 W			
MOD Power current, typical	4 A			
MOD Power inrush	4 A for 15 ms			
MOD Power passthrough(1)	6 A @ 18...32V DC			
MOD Power current rating, max	10 A Do not exceed 10 A current draw at the MOD power RTB.(2)			
SA Power voltage ranges(3)	0...32V DC 0...240V AC, 47...63 Hz			
SA Power current, max(3)	10 mA (DC power) 25 mA (AC power)			
SA Power passthrough(3), (4)	9.99 A @ 0...32V DC 9.975 A @ 0...240V AC, 47...63 Hz			
SA Power current rating, max (3)	Do not exceed 10 A current draw at the SA power RTB.			
Power dissipation, max	72 W			
Thermal dissipation, max	245.7 BTU/hr			
Isolation voltage	300V (continuous), Basic Insulation Type, SA, and MOD Power to Backplane 300V (continuous), Basic Insulation Type, SA to MOD Power 300V (continuous), Basic Insulation Type, Ethernet to Backplane 300V (continuous), Double Insulation Type, Ethernet to MOD Power 300V (continuous), Double Insulation Type, Ethernet to SA Power 50V (continuous), Functional Insulation Type, Ethernet to USB ports and DisplayPort 300V (continuous), Basic Insulation Type, USB ports, and DisplayPort to Backplane 300V (continuous), Double Insulation Type, USB ports, and DisplayPort to MOD Power 300V (continuous), Double Insulation Type, USB ports, and DisplayPort to SA Power No isolation between Ethernet ports Type tested at 1500V AC for 60 s			
Weight, approx	1.754 kg (3.868 lb)			
Dimensions (HxWxD), approx	166.20 x 130.21 x 126.54 mm (6.54 x 5.13 x 4.98 in.)			

Technical Specifications - CompactLogix 5480 Controller (Continued)

Attribute	5069-L430ERMW	5069-L450ERMW	5069-L4100ERMW	5069-L4200ERMW
Location	DIN rail mount (horizontal mount only)			
DIN rail	Compatible zinc-plated, chromate steel DIN rail. • EN50022 - 35 x 7.5 mm (1.38 x 0.30 in.) • EN50022 - 35 x 15 mm (1.38 x 0.60 in.)			
Removable terminal blocks	RTBs ship with the controller: • 5069-RTB64-SCREW kit: Includes 5069-RTB6-SCREW and 5069-RTB4-SCREW RTBs • 5069-L4UPSRTB			
Terminal block torque	5069-RTB4-SCREW, 5069-RTB6-SCREW, and 5069-L4UPSRTB connections: 0.4 N•m (3.5 lb•in) **ATTENTION**: Do not wire more than two conductors on one RTB terminal.			
Wire size	5069-RTB4-SCREW, 5069-RTB6-SCREW connections: 0.5...1.5 mm^2 (22...16 AWG) solid or stranded copper wire rated at 105 °C (221 °F), or greater, 3.5 mm (0.14 in.) max diameter including insulation, single wire connection only 5069-L4UPSRTB connections: 0.5...1.5 mm^2 (22...16 AWG) solid or stranded copper wire rated at 105 °C (221 °F), or greater, 2.9 mm (0.11 in.) max diameter including insulation, single wire connection only Ethernet connections: Ethernet Cabling and Installation according to IEC 61918 and IEC 61784-5-2			
Insulation stripping length	5069-RTB4-SCREW, 5069-RTB6-SCREW, and 5069-L4UPSRTB connections: 12 mm (0.47 in.)			
Wire category(5)	3 - on USB ports and DisplayPort 2 - on power ports 2 - on Ethernet ports			
Enclosure	None (open-style)			

(1) Maximum level of MOD Power current that the controller can pass through to the next module in the system. The specific level of current passed through varies based on system configuration.
(2) Remember, MOD power usage includes the total power that the controller and local Compact 5000 I/O modules use. If you connect external power to both sets of MOD power RTB terminals, however, the local Compact 5000 I/O modules can draw a maximum of 10 A in addition to the current that the controller draws.
(3) SA power specifications are based on the number and type of Compact 5000 I/O modules that are used in the system. If the set of I/O modules that are used in the system require AC and DC voltage, you must install a 5069-FPD field potential distributor to separate the module types.
(4) Maximum level of SA Power current that the controller can pass through to the next module in the system. The specific level of current passed through varies based on system configuration.
(5) Use this Conductor Category information for planning conductor routing. See the Industrial Automation Wiring and Grounding Guidelines, publication 1770-4.1.

Environmental Specifications - CompactLogix 5480 Controllers

Attribute	5069-L430ERMW, 5069-L450ERMW, 5069-4100ERMW, 5069-L4200ERMW
Temperature, operating IEC 60068-2-1 (Test Ad, Operating Cold), IEC 60068-2-2 (Test Bd, Operating Dry Heat), IEC 60068-2-14 (Test Nb, Operating Thermal Shock)	0 °C < Ta < +60 °C (+32 °F < Ta < +140 °F)
Temperature, nonoperating IEC 60068-2-1 (Test Ab, Unpackaged Nonoperating Cold), IEC 60068-2-2 (Test Bb, Unpackaged Nonoperating Dry Heat), IEC 60068-2-14 (Test Na, Unpackaged Nonoperating Thermal Shock)	-40...+85 °C (-40...+185 °F)
Temperature, surrounding air, max	60 °C (140 °F)
Relative humidity IEC 60068-2-30 (Test Db, Unpackaged Damp Heat)	5...95% noncondensing
Vibration IEC 60068-2-6 (Test Fc, Operating)	2 g @ 10...500 Hz
Shock, nonoperating IEC 60068-2-27 (Test Ea, Unpackaged Shock)	30 g
Emissions	IEC 61000-6-4
ESD immunity IEC 61000-4-2	4 kV contact discharges 8 kV air discharges
Radiated RF immunity IEC 61000-4-3	10V/m with 1 kHz sine-wave 80% AM from 80...2000 MHz 10V/m with 200 Hz 50% Pulse 100% AM @ 900 MHz 10V/m with 200 Hz 50% Pulse 100% AM @ 1890 MHz 3V/m with 1 kHz sine-wave 80% AM from 2000...2700 MHz 3V/m with 1 kHz sine-wave 80% AM from 2700...6000 MHz
EFT/B immunity IEC 61000-4-4	± 2 kV at 5 kHz on power ports ± 1 kV at 5 kHz on Ethernet ports
Surge transient immunity IEC 61000-4-5	± 500V line-line (DM) and ± 1 kV line-earth (CM) on power ports ± 1 kV line-earth (CM) on Ethernet ports
Conducted RF immunity IEC 61000-4-6	10V rms with 1 kHz sine-wave 80% AM from 150 kHz...80 MHz on power and Ethernet ports
Magnetic Field Immunity IEC 61000-4-8	30 A/m long duration at 60 Hz
Voltage variation IEC 61000-4-29	10 ms interruption on MOD Power port

Certifications - CompactLogix 5480 Controller

Certification[1]	5069-L430ERMW, 5069-L450ERMW, 5069-4100ERMW, 5069-L4200ERMW
c-UL-us	UL Listed Industrial Control Equipment, certified for US and Canada. See UL File E65584.
CE	European Union 2014/30/EU EMC Directive, compliant with: • EN 61326-1; Meas./Control/Lab., Industrial Requirements • EN 61000-6-2; Industrial Immunity • EN 61000-6-4; Industrial Emissions • EN 61131-2; Programmable Controllers (Clause 8, Zone A & B) European Union 2014/35/EU LVD, compliant with: • EN 61010-2-201; Control Equipment Safety Requirements European Union 2011/65/EU RoHS, compliant with: • EN 50581; Technical documentation
RCM	Australian Radiocommunications Act, compliant with: • EN 61000-6-4; Industrial Emissions
KC	Korean Registration of Broadcasting and Communications Equipment, compliant with: • Article 58-2 of Radio Waves Act, Clause 3
EAC	Russian Customs Union TR CU 020/2011 EMC Technical Regulation Russian Customs Union TR CU 004/2011 LV Technical Regulation
EtherNet/IP	ODVA conformance tested to EtherNet/IP specifications

(1) See the Product Certification link at http://www.ab.com for Declarations of Conformity, Certificates, and other certification details.

Controller Minimum Spacing Requirements

The minimum distance between the CompactLogix 5380 system or Compact GuardLogix 5380 system and enclosure walls, wireways, and adjacent equipment varies based on the current operating temperature.

The minimum distances on all sides of the system are as follows:

- **CompactLogix 5380 Standard and Process Controllers**
  - 50.80 mm (2.00 in.) at 55 °C (131 °F)
  - 101.60 mm (4.00 in) at 60 °C (140 °F)
- **Compact GuardLogix 5380 SIL 2 Controller**

  Series A catalog numbers:
  - 50.8 mm (2.00 in.) at 50 °C (122 °F)
  - 101.6 mm (4.00 in.) at 55 °C (131 °F)
  - 152.4 mm (6.00 in) at 60 °C (140 °F)

  Series B catalog numbers:
  - 50.8 mm (2.00 in.) at 55 °C (131 °F)
  - 101.6 mm (4.00 in.) at 60 °C (140 °F)
- **Compact GuardLogix 5380 SIL 3 Controller**
  - 50.8 mm (2.00 in.) at 55 °C (131 °F)
  - 101.6 mm (4.00 in.) at 60 °C (140 °F)

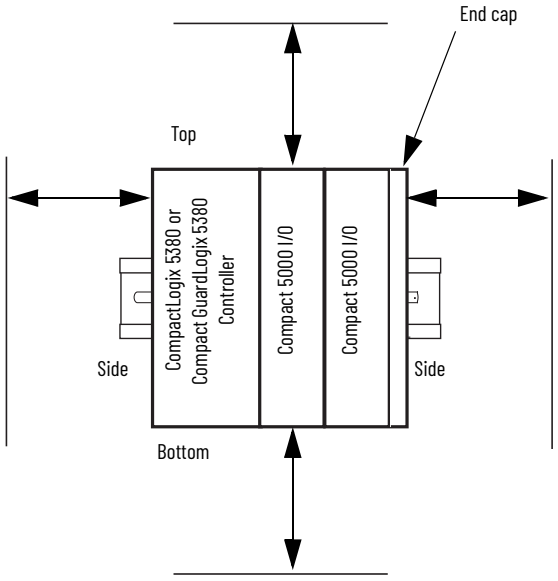

The minimum distance on of a system that includes only a CompactLogix 5480 controller is as follows:

- 25.00 mm (0.98 in.) between the sides and the cabinet
- 25.00 mm (0.98 in.) between the front of the controller and the cabinet
- 50.00 mm (1.96 in.) between the top and bottom and the cabinet
  We recommend that you install the controller near the bottom of the enclosure, where ambient temperature is lower.

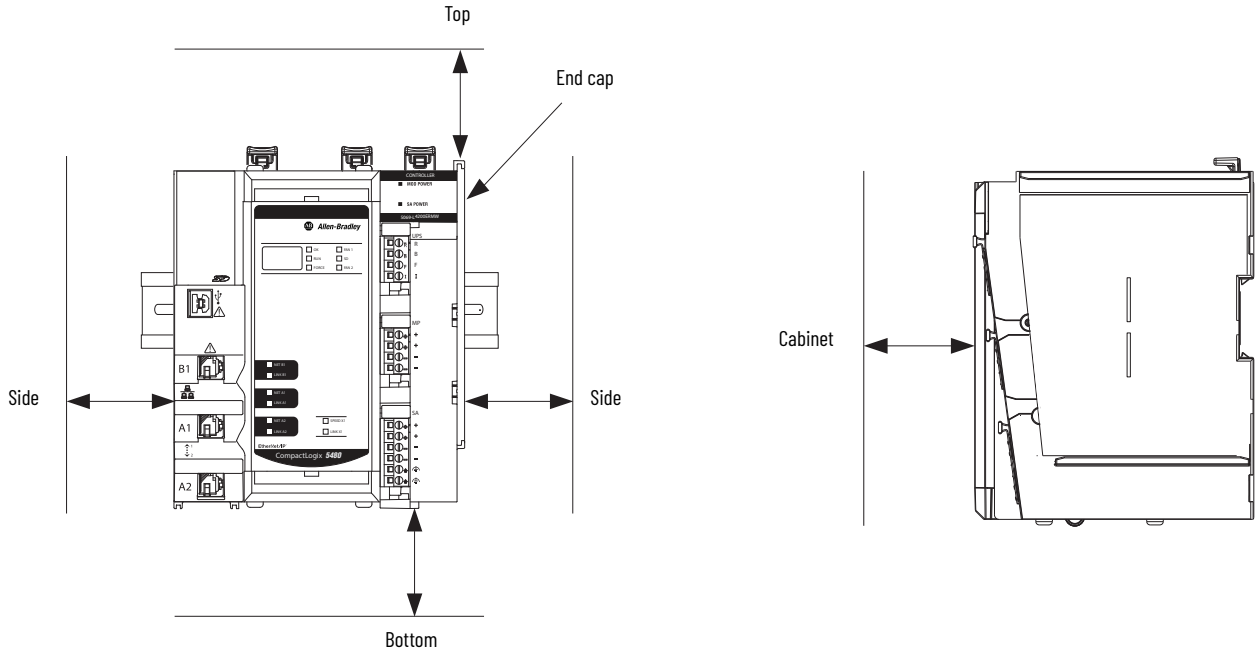

IMPORTANT	If Compact 5000 I/O modules are installed next to a CompactLogix 5380, Compact GuardLogix 5380, or CompactLogix 5480 controller, you must mount the system horizontally. You mount CompactLogix 5480 controllers in any orientation if there are no Compact 5000 I/O modules installed next to the controller.

Controller Dimensions

CompactLogix 5380

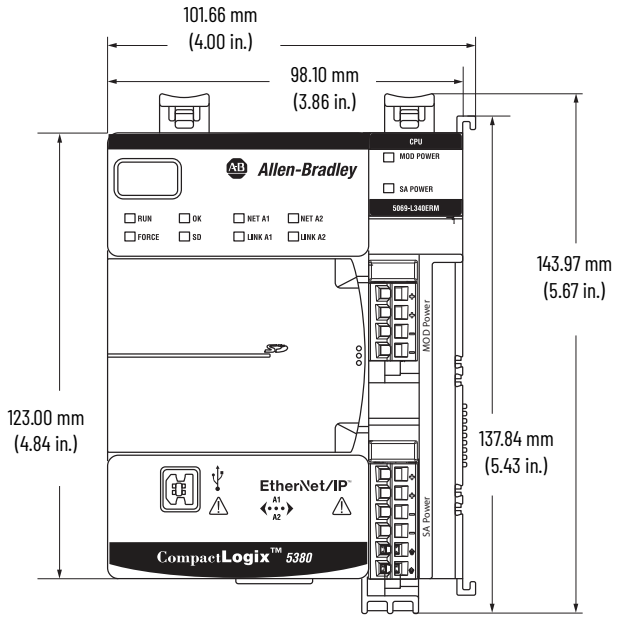

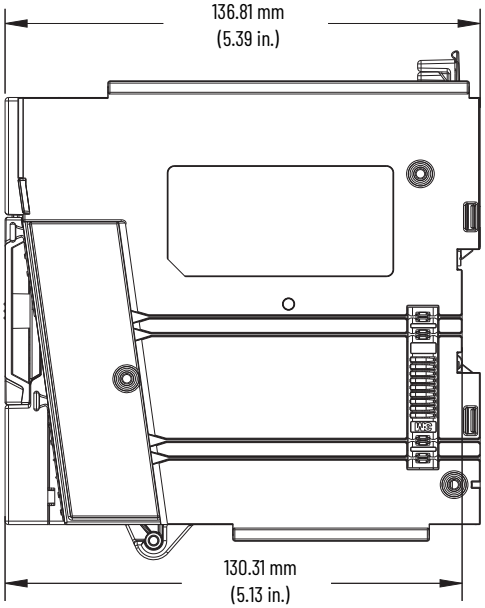

Compact GuardLogix 5380 SIL 2 Controller

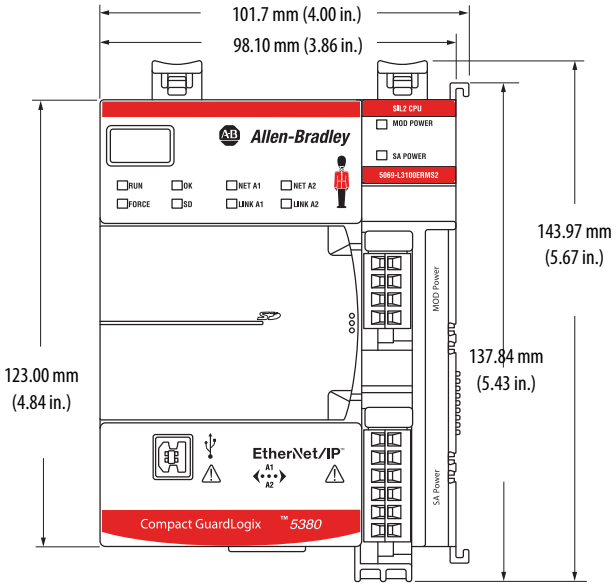

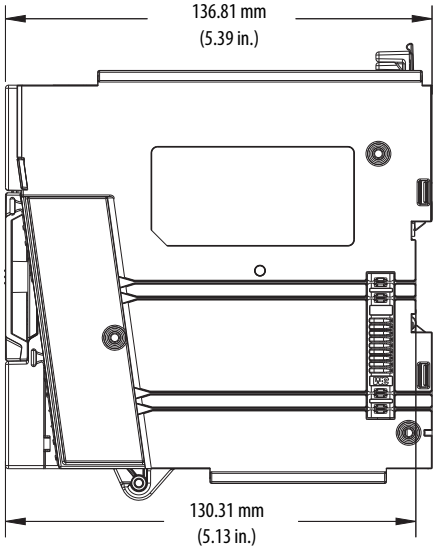

Compact GuardLogix 5380 SIL 3 Controller

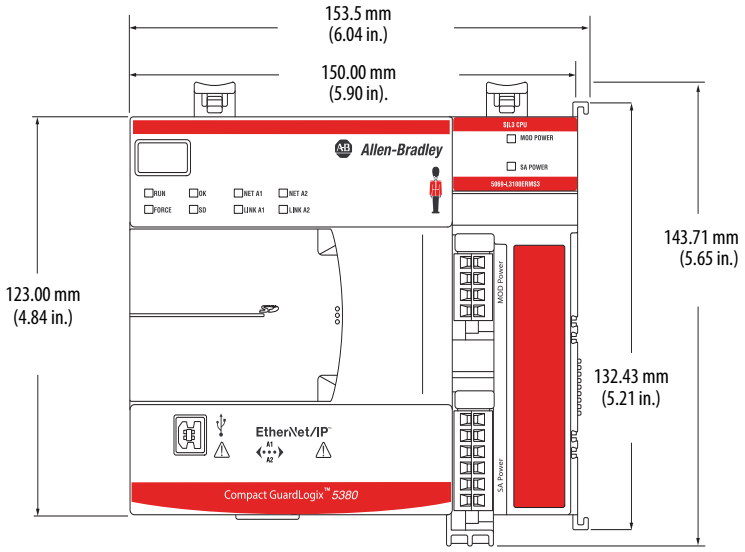

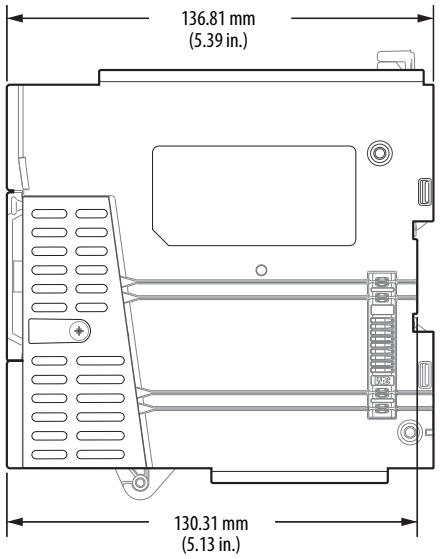

CompactLogix 5480

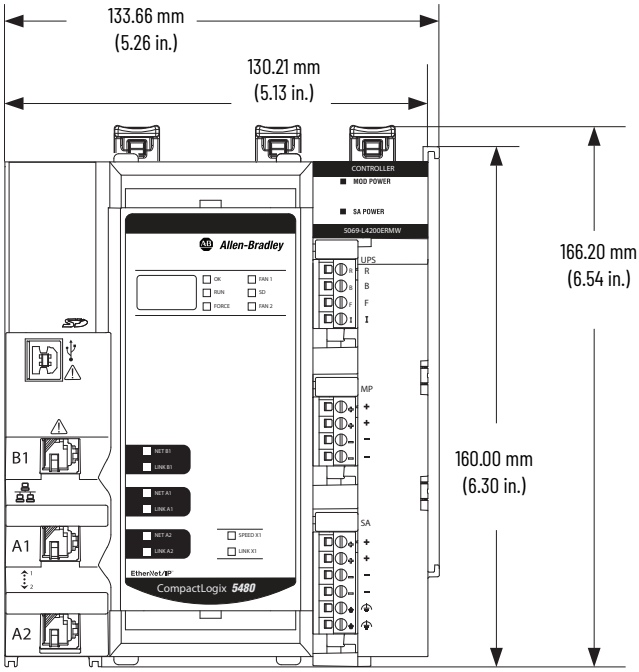

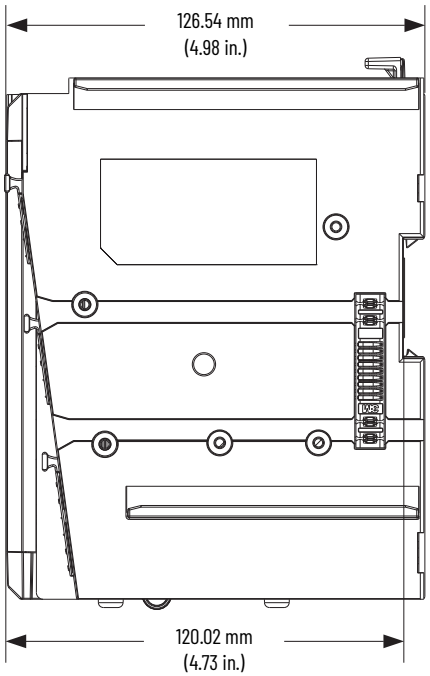

Controller Use with Other Devices

Your controller can control and communicate with the following devices:

- Control I/O Modules
- Communicate with Display Devices
- Communicate with Other Controllers

Control I/O Modules

The CompactLogix 5380 and Compact GuardLogix 5380 controllers can monitor and control local and remote I/O modules.

Local I/O Modules

- A CompactLogix 5380 and CompactLogix 5480 system supports Compact 5000 I/O standard modules as local I/O modules.
- A Compact GuardLogix 5380 system supports Compact 5000 I/O standard and safety modules as local modules.

The number of local I/O modules that are supported in a CompactLogix 5380 system or Compact GuardLogix 5380 system varies by controller catalog number.

Cat. No.	Local Compact 5000 I/O Modules Supported, Max	
	Standard I/O Modules	Any Combination of Standard and Safety I/O Modules
5069-L306ER, 5069-L306ERM	8	—
5069-L306ERS2, 5069-L306ERMS2, 5069-L306ERMS3		8
5069-L310ER, 5069-L310ER-NSE, 5069-L310ERM	8	—
5069-L310ERS2, 5069-L310ERMS2, 5069-L310ERMS3		8
5069-L320ER, 5069-L320ERM, 5069-L320ERMK, 5069-L320ERP	16	—
5069-L320ERS2, 5069-L320ERMS2, 5069-L320ERS2K, 5069-L320ERMS2K, 5069-L320ERMS3, 5069-L320ERMS3K		16
5069-L330ER, 5069-L330ERM(1), 5069-L330ERMK(1)	31	—
5069-L330ERS2, 5069-L330ERMS2, 5069-L330ERS2K, 5069-L330ERMS2K, 5069-L330ERMS3, 5069-L330ERMS3K		31
5069-L340ER, 5069-L340ERM, 5069-L340ERP	31	—
5069-L340ERS2, 5069-L340ERMS2, 5069-L340ERMS3		31
5069-L350ERM, 5069-L350ERMK	31	—
5069-L350ERS2, 5069-L350ERMS2, 5069-L350ERS2K, 5069-L350ERMS2K, 5069-L350ERMS3, 5069-L350ERMS3K		31
5069-L380ERM	31	—
5069-L380ERS2, 5069-L380ERMS2, 5069-L380ERMS3		31
5069-L3100ERM	31	—
5069-L3100ERS2, 5069-L3100ERMS2, 5069-L3100ERMS3		31
5069-L430ERMW, 5069-L450ERMW, 5069-4100ERMW, 5069-L4200ERMW	31	—

(1) When you use these controllers with the Logix Designer application, version 29.00.00, the application limits the number of local I/O modules in the project to 16. For more information, see the Rockwell Automation Knowledgebase article #942580, '5380 CompactLogix controllers limited to 16 local 5069 modules in version 29 of Studio 5000®.' The document is available at http://www.rockwellautomation.com/knowledgebase. With the Logix Designer application, version 30.00.00 or later, the controllers support 31 local I/O modules.

Remote I/O Modules

The controllers can connect to these remote I/O modules over an EtherNet/IP network.

IMPORTANT For maximum performance, we recommend that you use Compact 5000 I/O modules when you use remote I/O modules.

CompactLogix 5380 controllers, Compact GuardLogix 5380, and CompactLogix 5480 controllers support the remote I/O modules in this table. The I/O modules that are listed are **standard I/O modules**.

Module Type	I/O Module Family
Chassis-based I/O	1746 SLC™ I/O
	1756 ControlLogix® I/O
	1769 Compact I/O™
	Compact 5000 I/O standard modules
In-cabinet I/O	1734 POINT I/O™
	1794 FLEX™ I/O
On-Machine™ I/O	1732 ArmorBlock® I/O
	1738 ArmorPOINT® I/O

Only Compact GuardLogix 5380 controllers support the remote I/O modules in this table. The I/O modules that are listed are **safety I/O modules**.

Module Type	I/O Module Family
Chassis-based I/O	Compact 5000 I/O safety modules
	1756 ControlLogix Safety I/O
In-cabinet I/O	CompactBlock™ Guard I/O™
	POINT Guard I/O™
On-Machine™ I/O	1732 ArmorBlock® Guard I/O™

Communicate with Display Devices

The controller can communicate with these display devices over an EtherNet/IP network.

Device Type	Display
Industrial computers	Allen-Bradley® integrated-display rotating media (HDD) and solid-state (SSD) computers
	Allen-Bradley integrated-display computers with keypad
	Allen-Bradley non-display computers
Graphic terminals	PanelView™ Plus and PanelView CE terminals
	PanelView standard terminals
Message displays	InView™ message displays

Communicate with Other Controllers

The controller can communicate with these programmable controllers.

Controller Type	Controller Family
Programmable automation controller	CompactLogix 5370
	CompactLogix 5380
	CompactLogix 5480
	Compact GuardLogix 5370 (safety)
	Compact GuardLogix 5380 (safety)
	ControlLogix 5570
	ControlLogix 5580
	GuardLogix 5570 (safety)
	GuardLogix 5580 (safety)
	1756 Armor™ ContrlLogix (safety)
	1756 Armor™ GuardLogix® (safety)
	1768 Compact GuardLogix (safety)
	1768 CompactLogix
	1769 Modular CompactLogix
	1769 Packaged CompactLogix
Programmable logic controllers	1789 SoftLogix™ 5800
	PowerFlex® with DriveLogix™
	1785 PLC-5®(1)
	1747 SLC™(1)
	1761 MicroLogix™(2)
	1762 MicroLogix(2)
	1763 MicroLogix
	1764 MicroLogix(2)
	1766 MicroLogix

(1) These controllers require a built-in Ethernet port or a 1761-NET-ENI, EtherNet/IP RS-232-C interface to communicate with a CompactLogix 5380 controller over an EtherNet/IP network.

(2) These controllers require a 1761-NET-ENI, EtherNet/IP RS-232-C interface to communicate with a CompactLogix 5380 controller over an EtherNet/IP network.

Ethernet Node Limits

When you configure a CompactLogix 5380, Compact GuardLogix 5380, or CompactLogix 5480 control system, consider the number of Ethernet nodes that are used. The number of Ethernet nodes that you can include in the I/O configuration section in the Logix Designer application project is limited.

Maximum Number of Ethernet Nodes

The number of nodes that are supported in a Logix Designer application project varies by CompactLogix 5380, Compact GuardLogix 5380, and CompactLogix 5480 controller.

The maximum number of nodes that are listed represents when the controller is used with the Logix Designer application, version 31 or later. You can use CompactLogix 5380 controllers with earlier Logix Designer application versions. The maximum number of nodes that a controller supports can be fewer in Logix Designer application, versions 30 or earlier.

Cat. No.	Ethernet Nodes Supported
5069-L306ER, 5069-L306ERM, 5069-L306ERS2, 5069-L306ERMS2, 5069-L306ERMS3	16
5069-L310ER, 5069-L310ER-NSE, 5069-L310ERM, 5069-L310ERS2, 5069-L310ERMS2, 5069-L310ERMS3	24
5069-L320ER, 5069-L320ERM, 5069-L320ERMK, 5069-L320ERP 5069-L320ERS2, 5069-L320ERMS2, 5069-L320ERS2K, 5069-L320ERMS2K, 5069-L320ERMS3, 5069-L320ERMS3K	40
5069-L330ER, 5069-L330ERM, 5069-L330ERMK, 5069-L330ERS2, 5069-L330ERMS2, 5069-L330ERS2K, 5069-L330ERMS2K, 5069-L330ERMS3, 5069-L330ERMS3K	60
5069-L340ER, 5069-L340ERM, 5069-L340ERP 5069-L340ERS2, 5069-L340ERMS2, 5069-L340ERMS3	90
5069-L350ERM, 5069-L350ERMK, 5069-L350ERS2, 5069-L350ERMS2, 5069-L350ERS2K, 5069-L350ERMS2K	120
5069-L380ERM, 5069-L380ERS2, 5069-L380ERMS2, 5069-L380ERMS3	150
5069-L3100ERM, 5069-L3100ERS2, 5069-L3100ERMS2, 5069-L3100ERMS3	180
5069-L430ERMW	60
5069-L450ERMW	120
5069-4100ERMW	180
5069-L4200ERMW	250

Any devices that you add directly to the I/O configuration section are counted toward the Ethernet node limit. The following are examples of devices that must be counted:

- Remote communication adapters
- Devices with an embedded Ethernet port, such as I/O modules, drives, and linking devices
- Remote controllers when a produce/consume connection is established between the two controllers
- HMI devices that are included in the I/O configuration tree
- Third-party devices that are directly connected to the EtherNet/IP network

Accessories

The following accessories are used with a CompactLogix 5380, Compact GuardLogix 5380, or CompactLogix 5480 controller:

- End Cap
- Memory Cards
- Removable Terminal Kits - For CompactLogix 5380 and Compact GuardLogix 5380 controllers, Removable Terminal Blocks (RTB) are available in separately ordered 5069 RTB kits. For CompactLogix 5480 controllers, the required RTB kit ships with the controllers.
- Ethernet Communication Cables

End Cap

You must install an end cap, catalog number 5069-ECR, on the right side of the last module in a CompactLogix 5380, Compact GuardLogix 5380, or CompactLogix 5480 control system. The end cap is shipped with the controller.

SHOCK HAZARD: The end cap covers the exposed interconnections on the last module in the system. If you do not install the end cap before powering the system, equipment damage or injury from electric shock can result.

Memory Cards

Memory cards, also known as Secure Digital (SD) cards, offer nonvolatile memory to store a user program and tag data on a controller. Through the Logix Designer application, you can manually trigger the controller to save to or load from nonvolatile memory or configure the controller to load from nonvolatile memory on powerup.

A 1784-SD2 card ships with the controller. If you need additional SD cards, we recommend that you use one that is available from Rockwell Automation. The following SD cards are available to use with the controllers:

- 1784-SD1 (1 GB)
- 1784-SD2 (2 GB)
- 1784-SDHC8 (8GB)
- 1784-SDHC32 (32 GB)
- 9509-CMSDCD4 (4 GB)

We recommend that you use the SD cards available from Rockwell Automation.

Technical Specifications - 1784-SD1, 1784-SD2, 1784-SDHC8, 1784-SDHC32, 9509-CMSDCD4

Attribute	1784-SD1	1784-SD2	1784-SDHC8	1784-SDHC32	9509-CMSDCD4(1)
Memory	1 GB	2 GB	8 GB	32 GB	4 GB
Supported controllers	CompactLogix 5380, Compact GuardLogix 5380, CompactLogix 5480 controllers				
Weight, approx	1.76 g (0.062 oz)				2 g (0.07 oz)

(1) This card is used when license-based source protection and execution protection features are enabled.

Environmental Specifications - 1784-SD1, 1784-SD2, 1784-SDHC8, 1784-SDHC32

Attribute	1784-SD1, 1784-SD2
Temperature, operating IEC 60068-2-1 (Test Ad, Operating Cold), IEC 60068-2-2 (Test Bd, Operating Dry Heat), IEC 60068-2-14 (Test Nb, Operating Thermal Shock)	-40...+85 °C (-13...+185 °F)
Temperature, storage IEC 60068-2-1 (Test Ab, Unpackaged Nonoperating Cold), IEC 60068-2-2 (Test Bb, Unpackaged Nonoperating Dry Heat), IEC 60068-2-14 (Test Na, Unpackaged Nonoperating Thermal Shock)	-65...+150 °C (-85...+302 °F)
Relative humidity IEC 60068-2-30 (Test Db, Unpackaged Damp Heat)	5...95% noncondensing
Vibration IEC 60068-2-6 (Test Fc, Operating)	15 g peak to peak
Shock, operating IEC 60068-2-27 (Test Ea, Unpackaged Shock)	30 g
Shock, nonoperating IEC 60068-2-27 (Test Ea, Unpackaged Shock)	50 g
Emissions	IEC 61000-6-4
ESD immunity IEC 61000-4-2	6 kV contact discharges 8 kV air discharges
Radiated RF immunity IEC 61000-4-3	10V/m with 1 kHz sine-wave 80% AM from 80...2000 MHz 10V/m with 200 Hz 50% Pulse 100% AM @ 900 MHz 10V/m with 200 Hz 50% Pulse 100% AM @ 1890 MHz 3V/m with 1 kHz sine-wave 80% AM from 2000...2700 MHz

Certifications - 1784-SD1, 1784-SD2, 1784-SDHC8, 1784-SDHC32

Certification(1)	1784-SD1, 1784-SD2
CE	European Union 2014/30/EU EMC Directive, compliant with: • EN 61000-6-4; Industrial Emissions • EN 61326-1; Meas./Control/Lab., Industrial Requirements • EN 61000-6-2; Industrial Immunity • EN 61131-2; Programmable Controllers (Clause 8, Zone A & B)
RCM	Australian Radiocommunications Act, compliant with: • AS/NZS CISPR 11; Industrial Emissions
KC	Korean Registration of Broadcasting and Communications Equipment, compliant with: • Article 58-2 of Radio Waves Act, Clause 3

(1) When marked. See the Product Certification link at http://www.ab.com for Declarations of Conformity, Certificates, and other certification details.

Removable Terminal Kits

You can order RTBs to connect MOD power and SA power to CompactLogix 5380 and Compact GuardLogix 5380 controllers. The RTBs are used to connect wiring to the controllers. The MOD power connection uses a 4-point RTB, and the SA power connection uses a 6-point RTB.

CompactLogix 5380 and Compact GuardLogix Controllers - RTBs

Cat. No.	Description
5069-RTB64-SCREW	Contains the following: • 5069-RTB6-SCREW - 6-point RTB that uses screw-type terminals • 5069-RTB4-SCREW - 4-point RTB that uses screw-type terminals
5069-RTB64-SPRING	Contains the following: • 5069-RTB6-SPRING - 6-point RTB that uses spring-type terminals to connect SA power to the controller. • 5069-RTB4-SPRING - 4-point RTB that uses spring-type terminals to connect MOD power to the controller.

Ethernet Communication Cables

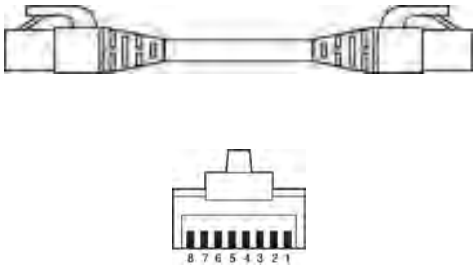

Connector Number	Color	1585J 8-pin Cables with Support for 10/100/1000 Mbps	1585J 8-pin Cables with Support for 10/100 Mbps	1585J 4-pin Cables with Support for 10/100 Mbps
1	White/Orange	BI_DA+	TxData +	
2	Orange	BI_DA-	TxData -	
3	White/Green	BI_DB+	Recv Data +	
4	Blue	BI_DC+	Unused	—
5	White/Blue	BI_DC-	Unused	—
6	Green	BI_DB-	Recv Data -	
7	White/Brown	BI_DD+	Unused	—
8	Brown	BI_DD-	Unused	—

Attribute	Value
Connector type	RJ45 male to RJ45 male
Connector angle	Straight-through
Length	Varies by catalog number

Additional Resources

These documents contain additional information concerning related products from Rockwell Automation.

Resource	Description
CompactLogix Controllers Selection Guide, publication 1769-SG001	Describes how to design and select components for your CompactLogix™ controller system.
CompactLogix 5380 and Compact GuardLogix Controllers User Manual, publication 5069-UM001	Describes how to use CompactLogix 5380 and Compact GuardLogix® 5380 controllers.
CompactLogix 5480 Controllers User Manual, publication 5069-UM002	Describes how to use CompactLogix 5480 controllers.
Compact 5000 I/O Modules and EtherNet/IP Adapters Specifications Technical Data, publication 5069-TD001	Provides specifications, wiring diagrams, and functional block diagrams for Compact 5000™ I/O modules and EtherNet/IP™ adapters.
Compact 5000 I/O Digital Modules User Manual, publication 5069-UM004	Describes how to configure and operate Compact 5000 I/O digital and safety modules.
Compact 5000 I/O Analog Modules User Manual, publication 5069-UM005	Describes how to configure and operate Compact 5000 I/O analog modules.
Compact 5000 I/O High-speed Counter Module User Manual, publication 5069-UM006	Describes how to configure and operate a Compact 5000 I/O high-speed counter module.
Replacement Guidelines: Logix 5000 Controllers Reference Manual, publication 1756-RM100	Describes how to replace the following: ControlLogix® 5560/5570 controller with a ControlLogix 5580 controller CompactLogix 5370 L3 controllers with a CompactLogix 5380 controller
Compact 5000 EtherNet/IP Adapters User Manual, publication 5069-UM007	Describes how to use Compact 5000 I/O and FLEX 5000™ I/O EtherNet/IP communication modules.
Integrated Architecture and CIP Sync Configuration Application Technique, publication IA-AT003	Provides information on CIP Sync™ and the IEEE 1588-2008 Precision Time Protocol.
Integrated Architecture Tools website, http://www.rockwellautomation.com/global/products-technologies/integrated-architecture/tools/overview.page	Provides information on tools that you can use in the selection, development, commissioning, and maintenance stages of the Integrated Architecture® lifecycle.
Industrial Automation Wiring and Grounding Guidelines, publication 1770-4.1	Provides general guidelines for installing a Rockwell Automation industrial system.
Product Certifications website, rok.auto/certifications.	Provides declarations of conformity, certificates, and other certification details.

You can view or download publications at rok.auto/literature.

Rockwell Automation Support

Use these resources to access support information.

Technical Support Center	Find help with how-to videos, FAQs, chat, user forums, and product notification updates.	rok.auto/support
Knowledgebase	Access Knowledgebase articles.	rok.auto/knowledgebase
Local Technical Support Phone Numbers	Locate the telephone number for your country.	rok.auto/phonesupport
Literature Library	Find installation instructions, manuals, brochures, and technical data publications.	rok.auto/literature
Product Compatibility and Download Center (PCDC)	Get help determining how products interact, check features and capabilities, and find associated firmware.	rok.auto/pcdc

Documentation Feedback

Your comments help us serve your documentation needs better. If you have any suggestions on how to improve our content, complete the form at rok.auto/docfeedback.

Allen-Bradley, Armor, ArmorBlock, Compact 5000, Compact I/O, CompactBlock CompactLogix, ControlLogix, DriveLogix, expanding human possibility, FactoryTalk, FLEX, FLEX 5000, Guard I/O, GuardLogix, Integrated Architecture, InView, Logix 5000, MicroLogix, On-Machine, PanelView, PlantPAx, PLC-5, POINT I/O, POINT Guard I/O, PowerFlex, Rockwell Automation, SLC, SoftLogix, Studio 5000, and Studio 5000 Logix Designer are trademarks of Rockwell Automation, Inc.

CIP, CIP Sync and EtherNet/IP are trademarks of ODVA.

Trademarks not belonging to Rockwell Automation are property of their respective companies.

Rockwell Automation maintains current product environmental information on its website at rok.auto/pec.

Rockwell Otomasyon Ticaret A.Ş. Kar Plaza İş Merkezi E Blok Kat:6 34752, İçerenköy, İstanbul, Tel: +90 (216) 5698400 EEE YÖnetmeliğine Uygundur

Connect with us.

rockwellautomation.com — expanding **human possibility**™

AMERICAS: Rockwell Automation, 1201 South Second Street, Milwaukee, WI 53204-2496 USA, Tel: (1) 414.382.2000, Fax: (1) 414.382.4444
EUROPE/MIDDLE EAST/AFRICA: Rockwell Automation NV, Pegasus Park, De Kleetlaan 12a, 1831 Diegem, Belgium, Tel: (32) 2 663 0600, Fax: (32) 2 663 0640
ASIA PACIFIC: Rockwell Automation, Level 14, Core F, Cyberport 3, 100 Cyberport Road, Hong Kong, Tel: (852) 2887 4788, Fax: (852) 2508 1846

Publication 5069-TD002J-EN-P - August 2020
Supersedes Publication 5069-TD002I-EN-P - May 2020

Copyright © 2020 Rockwell Automation, Inc. All rights reserved. Printed in the U.S.A.