Technical Data

Allen-Bradley

Industrial Tower Uninterruptible Power Supply Specifications

Bulletin Numbers 1609-P

Topic	Page
1609-P Specifications	2
1609-P Approximate Dimensions and Shipping Weights	3

Additional Resources

These documents contain additional information concerning related products from Rockwell Automation.

Resource	Description
Industrial Automation Wiring and Grounding Guidelines, publication 1770-4.1	Provides general guidelines for installing a Rockwell Automation industrial system.
Product Certifications website, http://www.ab.com	Provides declarations of conformity, certificates, and other certification details.

You can view or download publications at http://www.rockwellautomation.com/literature/. To order paper copies of technical documentation, contact your local Allen-Bradley distributor or Rockwell Automation sales representative.

LISTEN. THINK. SOLVE.®

Allen-Bradley • Rockwell Software

Rockwell Automation

Specifications

Electrical Ratings		1609-P3000N	1609-P3000A	1609-P5000E	1609-P8000E	1609-P10000E
Input	V nom. (V AC)	120	230	208/230	208/230	208/230
	Voltage Range, default (V AC)	90…150V	160…280V			
	Current (A)	20 nom., 28 max.	11 nom., 14 max.	19 nom., 24 max.	30 nom., 40 max.	39 nom., 48 max.
	Capacity	3000VA (2100 W)		5000VA (3500 W)	8000VA (6400 W)	10 000VA (8000 W)
	Frequency	45…65 Hz (self sensing)				
	PFC	> 0.95				
	Protection	N/A	N/A	N/A	70 A input circuit breaker	
Output	V nom.	120V	208V			
	Capacity	3000VA (2100 W)		5000VA (3500 W)	8000VA (6400 W)	10 000VA (8000 W)
	Protection	3…15 A circuit breaker			N/A	N/A
On Battery	Frequency	Nominal +/- 3 Hz				
	Reg.	+/- 2% static +/- 5% dynamic	+/- 1% static, +/- 5% dynamic			
	THD	<5% at full load				
	Crest Factor	3:01				
Efficiency	On Battery	86%				
	On Line	88%				
Protection	Surge	IEC 1000-4-4				
	Overload	125% : 1 minute, 150% : 30 seconds				
	Output Short	Input circuit breakers and/or premises branch protection				
	Thermal Protection	Yes				
	Bypass	N/A			70 A input circuit breaker	
Regulatory	Safety	UL 1778, cULus, IEC 60950	EN 61000-3-2	UL 1778, cULus, IEC 60950		
	EMC	FCC (Class A)	EN50091-2	FCC (Class A), EN50091-2		
	Markings	cULus, CSA	CE	cULus, CSA, CE		
Battery Pack	Run Time	14 minutes @ full load, 34 minutes @ half load		5…7 minutes @ full load, 13…18 minutes @ half load		
	Type	Sealed Lead Acid, valve regulated, hot swappable, user replaceable				
	Voltage	192V				
	Charger	Temperature compensated current limited, float charger				
	Recharge Time	Less than 3 hours to 90% capacity	Less than 3 hours to 85% capacity			
	Lifetime	2…4 years @ 25 °C ambient				
Environment	Temperature	0…40 °C (operating), -20…60 °C (short term storage)				
	Altitude	10 000 ft (operating)				
	Humidity	0…95% non-condensing (operating)				
	Heat Output (Full Load)	655 BTU/hour		1040 BTU/hour	1536 BTU/hour	2216 BTU/hour
	Audible Noise	<50 dB @ 1 meter (full load)	<55 dB @ 1 meter (full load)			
Rear Panel	AC Outlets	(6) NEMA 5…15 (2) NEMA 5…20	(8) IEC C13 (2) IEC C19		(12) IEC C13 (2) IEC C19	
	AC Inlets	NEMA L5…30	IEC C14	IEC C20	3 position terminal blocks	
Communication	DB9	Serial and Contact Closures				
	EPO	Via Contact Closure				
	Network	Via Network Management Card (1609-NMC, provided as standard with units >3 KVA)				
Indicators and Controls	LED Status	On-line, In Bypass Mode, On Battery, Overload and Replace Battery, Fault, Bar graph for Load, Bar graph for Battery Fuel Gauge, Bar graph for Measured Input Voltage when recessed switch is held				
	Control	(Front panel) On/self-test/alarm silence/cold start/load off				
	Audible	On Battery: 4 short beeps repeats about 20 seconds (mutable), Low Battery: persistent 0.5 second beep every 1 second (mutable), In Bypass: continuous beeping, Failure: continuous tone, Replace Battery: occasional on/off change - single beep				

ATTENTION

- Wiring of the UPS should be performed by a qualified electrician. Use appropriate size wires.
- In 230V AC applications, the UPS must be protected with a circuit breaker that complies with European standards for branch rated protection per the country of installation.
- In 208V AC applications, the UPS must be protected by a dual-pole, 10 A branch rated, UL 489 circuit breaker.
- The 120V AC 1609-P3000N has supplementary circuit breaker protection. The unit should be protected by a single-pole, 15 A branch rated, UL 489 circuit breaker.
  Allen-Bradley part number 1492-MCAA115 is suggested.
- **The branch circuit breaker must be off prior to wiring the unit.**

Notes

208V AC applications: The 1609-P5000E, 1609-P8000E, and 1609-P10000E, ship ready for 230V AC sources. When operating one of these in 208V AC applications, the UPS low transfer voltage settings are adjusted through the PowerChute® software or the Network Management Card.

Refer to the PowerChute® User Guide or the Network Management Card instructions for details.

Approximate Dimensions and Shipping Weights

Approximate dimensions are shown in millimeters (in.) unless otherwise indicated. Dimensions are not to be used for manufacturing purposes.

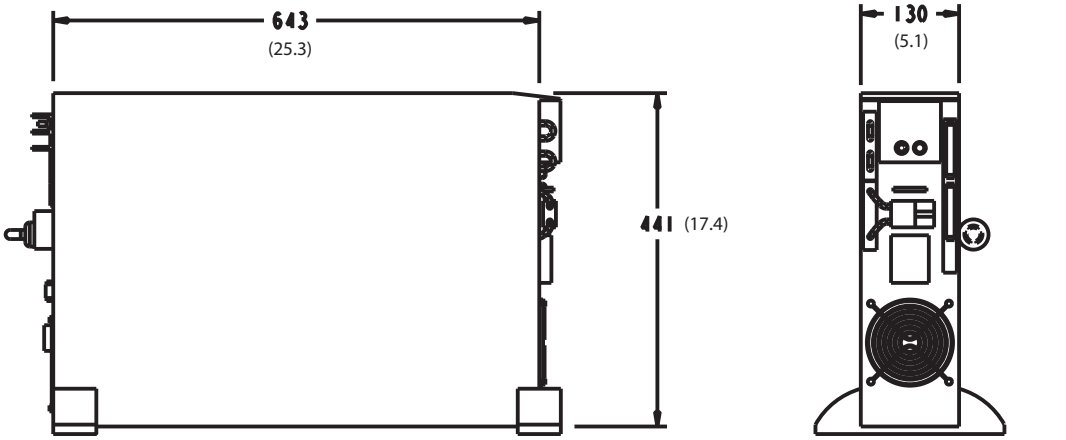

1609-P3000N
1609-P3000H
1609-P3000A
1609-P5000E

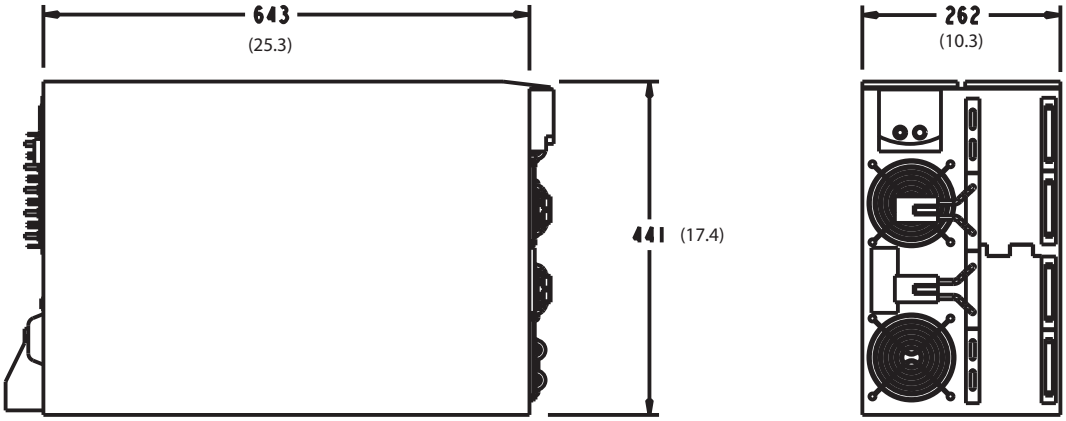

1609-P8000E
1609-P10000E

Approximate Shipping Weights

Output Power	Input Voltage	Cat. No.	Approx. Shipping Weight [kg (lb)]
3000VA (2100 W)	120V AC	**1609-P3000N**	63.5 (140)
3000VA (2100 W)	230V AC	**1609-P3000A**	63.5 (140)
5000VA (3500 W)	208/230V AC	1609-P5000E	63.5 (140)
8000VA (6400 W)	208/230V AC	1609-P8000E	128.8 (284)
10000VA (8000 W)	208/230V AC	1609-P10000E	128.8 (284)

Approximate dimensions are shown in millimeters (in.) unless otherwise indicated. Dimensions are not to be used for manufacturing purposes.

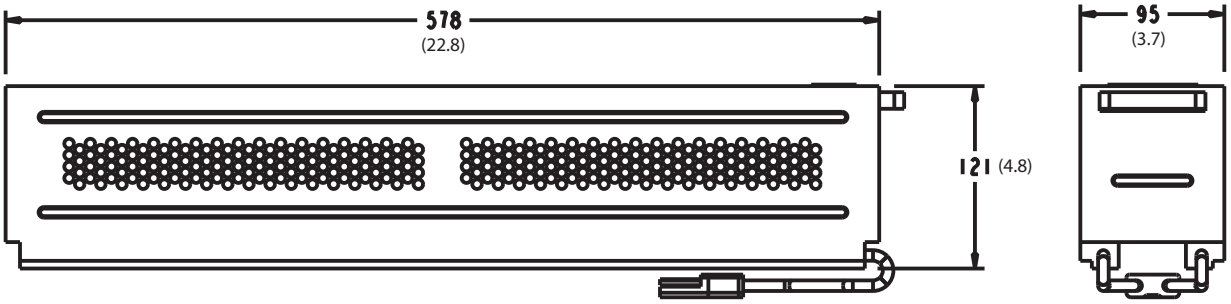

1609-PBAT

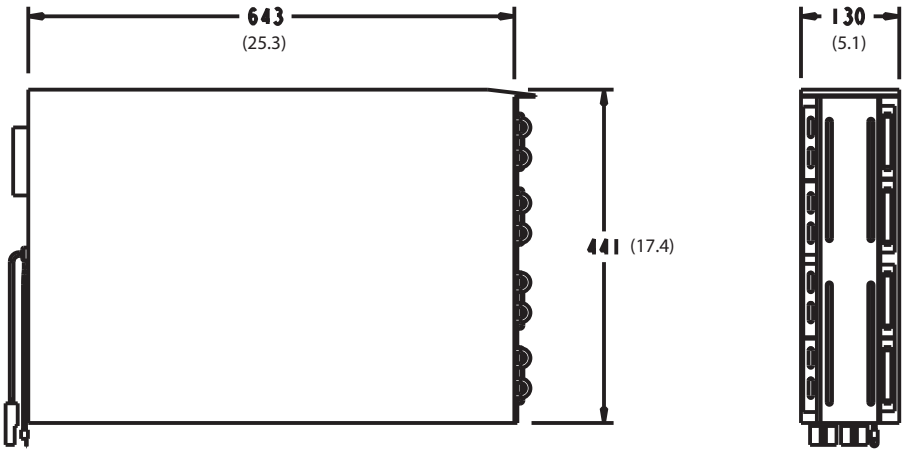

1609-PXBP

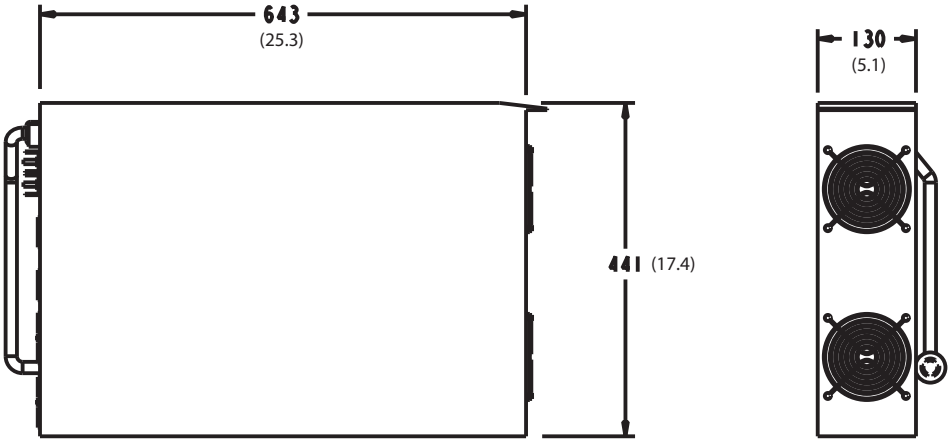

1609-5000CCT

Approximate Shipping Weights

Description	Cat. No.	Approx. Shipping Weight [kg (lb)]
Replacement battery	1609-PBAT	37.2 (82)
External battery pack	**1609-PXBP**	101.2 (223)
5000VA CCT (120V step down transformer)	1609-5000CCT	63.5 (140)
Rail kit	1609-PRK1	3.6 (8)

Important User Information

Read this document and the documents listed in the additional resources section about installation, configuration, and operation of this equipment before you install, configure, operate, or maintain this product. Users are required to familiarize themselves with installation and wiring instructions in addition to requirements of all applicable codes, laws, and standards.

Activities including installation, adjustments, putting into service, use, assembly, disassembly, and maintenance are required to be carried out by suitably trained personnel in accordance with applicable code of practice.

If this equipment is used in a manner not specified by the manufacturer, the protection provided by the equipment may be impaired.

In no event will Rockwell Automation, Inc. be responsible or liable for indirect or consequential damages resulting from the use or application of this equipment.

The examples and diagrams in this manual are included solely for illustrative purposes. Because of the many variables and requirements associated with any particular installation, Rockwell Automation, Inc. cannot assume responsibility or liability for actual use based on the examples and diagrams.

No patent liability is assumed by Rockwell Automation, Inc. with respect to use of information, circuits, equipment, or software described in this manual.

Reproduction of the contents of this manual, in whole or in part, without written permission of Rockwell Automation, Inc., is prohibited.

Documentation Feedback

Your comments will help us serve your documentation needs better. If you have any suggestions on how to improve this document, complete this form, publication RA-DU002, available at http://www.rockwellautomation.com/literature/.

Allen-Bradley, Rockwell Software, Rockwell Automation, and LISTEN. THINK. SOLVE are trademarks of Rockwell Automation, Inc.
Trademarks not belonging to Rockwell Automation are property of their respective companies.

Rockwell Otomasyon Ticaret A.Ş., Kar Plaza İş Merkezi E Blok Kat:6 34752 İçerenköy, İstanbul, Tel: +90 (216) 5698400

www.rockwellautomation.com

Power, Control and Information Solutions Headquarters

Americas: Rockwell Automation, 1201 South Second Street, Milwaukee, WI 53204-2496 USA, Tel: (1) 414.382.2000, Fax: (1) 414.382.4444
Europe/Middle East/Africa: Rockwell Automation NV, Pegasus Park, De Kleetlaan 12a, 1831 Diegem, Belgium, Tel: (32) 2 663 0600, Fax: (32) 2 663 0640
Asia Pacific: Rockwell Automation, Level 14, Core F, Cyberport 3, 100 Cyberport Road, Hong Kong, Tel: (852) 2887 4788, Fax: (852) 2508 1846

Publication 1609-TD001A-EN-P - August 2014

Copyright © 2014 Rockwell Automation, Inc. All rights reserved. Printed in the U.S.A.