Installation Instructions

POINT I/O Common Terminal Module and Voltage Terminal Module

Catalog No. 1734-CTM, Series C, and 1734-VTM, Series C

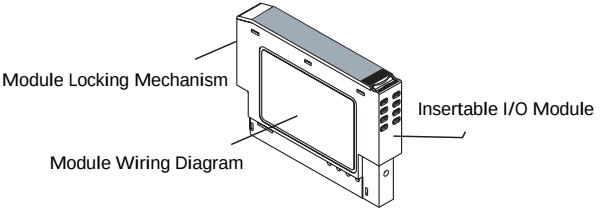

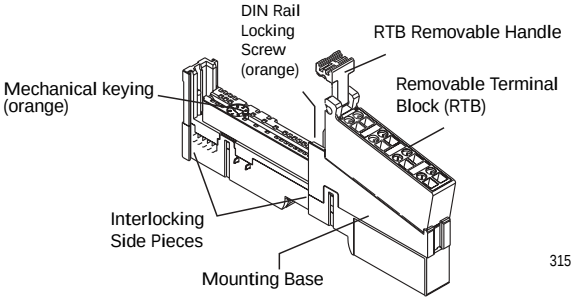

The Wiring Base Assembly consists of Mounting Base, 1734-MB, and Removable Terminal Block, 1734-RTB or 1734-RTBS.

Publication 1734-IN024A-EN-E - March 2005

Important User Information

Solid state equipment has operational characteristics differing from those of electromechanical equipment. *Safety Guidelines for the Application, Installation and Maintenance of Solid State Controls* (Publication SGI-1.1 available from your local Rockwell Automation sales office or online at http://literature.rockwellautomation.com) describes some important differences between solid state equipment and hard-wired electromechanical devices. Because of this difference, and also because of the wide variety of uses for solid state equipment, all persons responsible for applying this equipment must satisfy themselves that each intended application of this equipment is acceptable.

In no event will Rockwell Automation, Inc. be responsible or liable for indirect or consequential damages resulting from the use or application of this equipment.

The examples and diagrams in this manual are included solely for illustrative purposes. Because of the many variables and requirements associated with any particular installation, Rockwell Automation, Inc. cannot assume responsibility or liability for actual use based on the examples and diagrams.

No patent liability is assumed by Rockwell Automation, Inc. with respect to use of information, circuits, equipment, or software described in this manual.

Reproduction of the contents of this manual, in whole or in part, without written permission of Rockwell Automation, Inc., is prohibited.

Throughout this manual, when necessary, we use notes to make you aware of safety considerations.

WARNING	Identifies information about practices or circumstances that can cause an explosion in a hazardous environment, which may lead to personal injury or death, property damage, or economic loss.
IMPORTANT	Identifies information that is critical for successful application and understanding of the product.
ATTENTION	Identifies information about practices or circumstances that can lead to personal injury or death, property damage, or economic loss. Attentions help you: • identify a hazard • avoid a hazard • recognize the consequence
SHOCK HAZARD	Labels may be located on or inside the equipment (e.g., drive or motor) to alert people that dangerous voltage may be present.
BURN HAZARD	Labels may be located on or inside the equipment (e.g., drive or motor) to alert people that surfaces may be dangerous temperatures.

WARNING

Environment and Enclosure

This equipment is intended for use in a Pollution Degree 2 industrial environment, in overvoltage Category II applications (as defined in IEC publication 60664-1), at altitudes up to 2000 meters without derating.

This equipment is considered Group 1, Class A industrial equipment according to IEC/CISPR Publication 11. Without appropriate precautions, there may be potential difficulties ensuring electromagnetic compatibility in other environments due to conducted as well as radiated disturbance.

This equipment is supplied as “open type” equipment. It must be mounted within an enclosure that is suitably designed for those specific environmental conditions that will be present and appropriately designed to prevent personal injury resulting from accessibility to live parts. The interior of the enclosure must be accessible only by the use of a tool. Subsequent sections of this publication may contain additional information regarding specific enclosure type ratings that are required to comply with certain product safety certifications.

See NEMA Standards publication 250 and IEC publication 60529, as applicable, for explanations of the degrees of protection provided by different types of enclosure. Also, see the appropriate sections in this publication, as well as the Allen-Bradley publication 1770-4.1 (“Industrial Automation Wiring and Grounding Guidelines”), for additional installation requirements pertaining to this equipment.

WARNING

Explosion Hazard

Do not disconnect equipment unless power has been removed or the area is known to be nonhazardous.

Do not disconnect connections to this equipment unless power has been removed or the area is known to be nonhazardous. Secure any external connections that mate to this equipment by using screws, sliding latches, threaded connectors, or other means provided with this product.

Substitution of components may impair suitability for Class I, Division 2.

If this product contains batteries, they must only be changed in an area known to be nonhazardous.

About the Modules

The POINT I/O Common Terminal Module and Voltage Terminal Module provide expansion of the termination capability of POINT I/O. The modules support higher density (8 channel) POINT I/O modules and management of wiring of field devices to the POINT I/O solution.

Install the Mounting Base

To install the mounting base on the DIN rail, proceed as follows.

1. Position the mounting base vertically above the installed units (adapter, power supply, or existing module).

2. Slide the mounting base down so that the interlocking side pieces to engage the adjacent module or adapter.

3. Press firmly to seat the mounting base on the DIN rail. The mounting base snaps into place.

Install the Module

Install the module before or after mounting base installation. Be sure to correctly key the mounting base before installing the module into the mounting base. In addition, be sure to position the mounting base locking screw horizontal referenced to the base.

WARNING

When you insert or remove the module while backplane power is on, an electrical arc can occur. This could cause an explosion in hazardous location installations.
Be sure that power is removed or the area is nonhazardous before proceeding. Repeated electrical arcing causes excessive wear to contacts on both the module and its mating connector. Worn contacts may create electrical resistance that can affect module operation.

1. Using a bladed screwdriver, rotate the keyswitch on the mounting base clockwise until the number required for the type of module you are installing aligns with the notch in the base.

2. Make certain the DIN rail locking screw is in the horizontal position.

   You cannot insert the module if the locking mechanism is unlocked.

3. Insert the module straight down into the mounting base and press to secure.

   The module locks into place.

Install the Removable Terminal Block (RTB)

You will find the RTB supplied with the wiring base assembly. To remove, pull up on the RTB handle. You can now remove the mounting base and replace as necessary without removing any of the wiring. To reinsert the RTB, proceed as follows.

1. Insert the end opposite the handle into the base unit.

   This end has a curved section that engages with the wiring base.

2. Rotate the terminal block into the wiring base until it locks itself in place.

3. If an I/O module is installed, snap the RTB handle into place on the module.

Remove a Mounting Base

To remove a mounting base, you must remove any installed module, and the module installed in the base to the right. Remove the removable terminal block (if wired).

1. Unlatch the RTB handle on the I/O module.
2. Pull on the RTB handle to remove the removable terminal block.
3. Press on the module lock on the top of the module.
4. Pull on the I/O module to remove from the base.

WARNING

When you insert or remove the module while backplane power is on, an electrical arc can occur. This could cause an explosion in hazardous location installations.

Be sure that power is removed or the area is nonhazardous before proceeding. Repeated electrical arcing causes excessive wear to contacts on both the module and its mating connector. Worn contacts may create electrical resistance that can affect module operation.

5. Repeat steps 1, 2, 3, and 4 for the module to the right.
6. Use a small-bladed screwdriver to rotate the orange base locking screw to a vertical position.

   This releases the locking mechanism.
7. Lift straight up to remove.

Wire the Modules

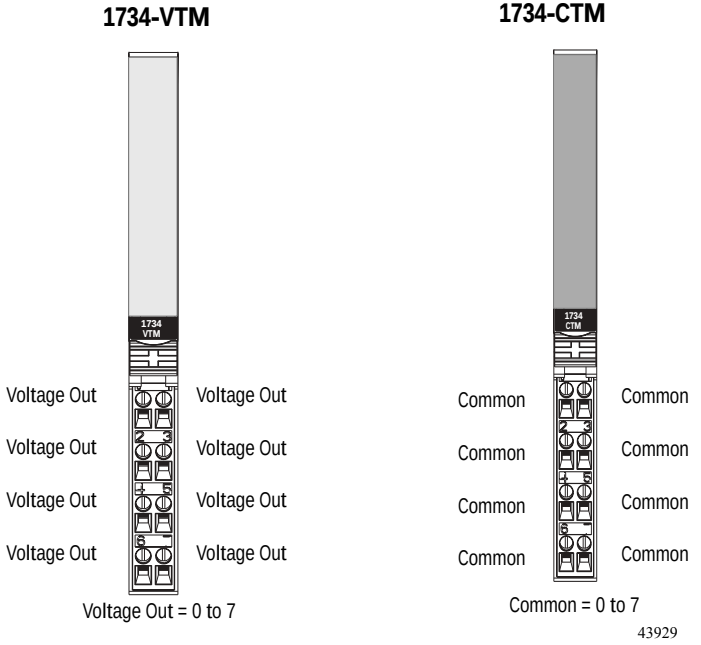

Sink Input Wiring

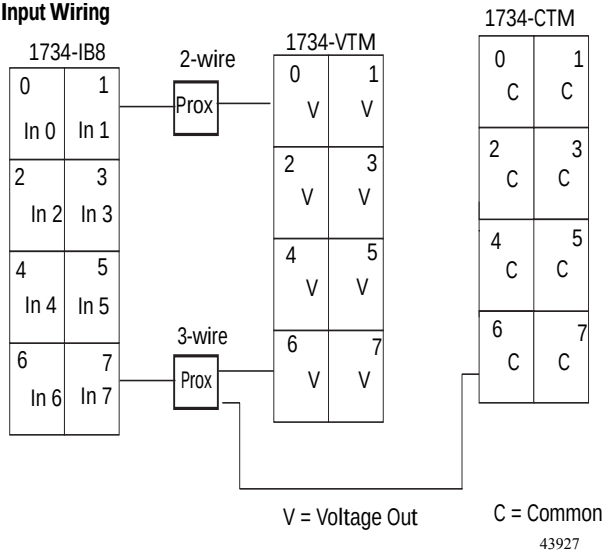

Source Input Wiring

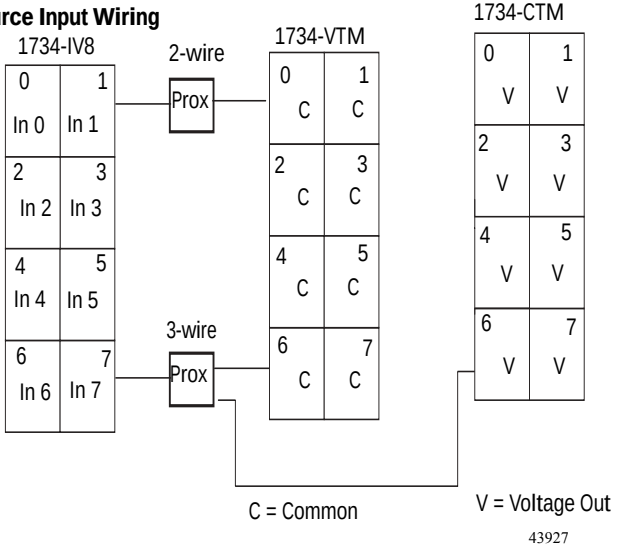

Source Output Wiring

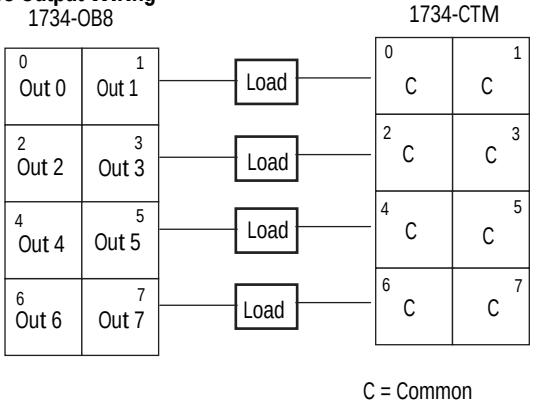

Sink Output Wiring

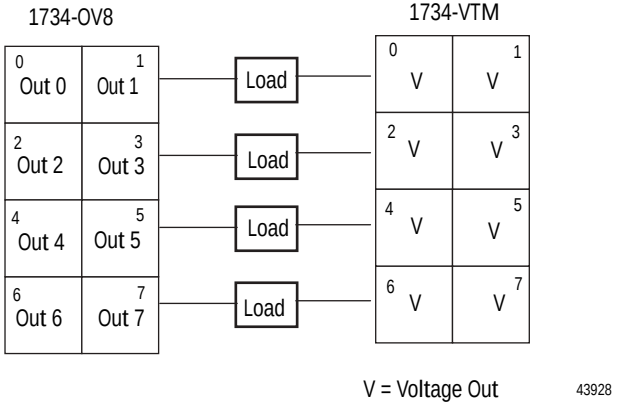

General Purpose Wiring

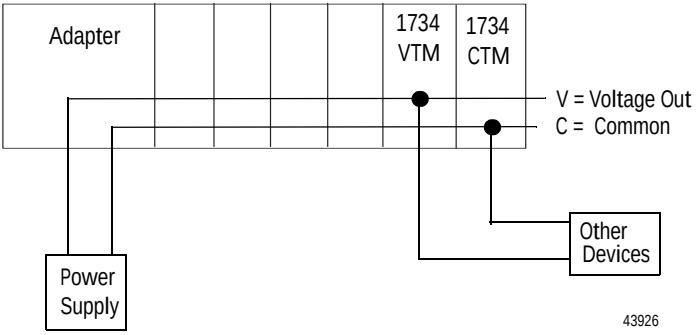

Safety Approvals

North American Hazardous Location Approval

The 1734-CTM and 1734-VTM modules, Series C, are North American Hazardous Location approved.

The following information applies when operating this equipment in hazardous locations:	**Informations sur l'utilisation de cet équipement en environnements dangereux:**
Products marked "CL I, DIV 2, GP A, B, C, D" are suitable for use in Class I Division 2 Groups A, B, C, D, Hazardous Locations and nonhazardous locations only. Each product is supplied with markings on the rating nameplate indicating the hazardous location temperature code. When combining products within a system, the most adverse temperature code (lowest "T" number) may be used to help determine the overall temperature code of the system. Combinations of equipment in your system are subject to investigation by the local Authority Having Jurisdiction at the time of installation.	Les produits marqués "CL I, DIV 2, GP A, B, C, D" ne conviennent qu'à une utilisation en environnements de Classe I Division 2 Groupes A, B, C, D dangereux et non dangereux. Chaque produit est livré avec des marquages sur sa plaque d'identification qui indiquent le code de température pour les environnements dangereux. Lorsque plusieurs produits sont combinés dans un système, le code de température le plus défavorable (code de température le plus faible) peut être utilisé pour déterminer le code de température global du système. Les combinaisons d'équipements dans le système sont sujettes à inspection par les autorités locales qualifiées au moment de l'installation.
WARNING **EXPLOSION HAZARD -** • Do not disconnect equipment unless power has been removed or the area is known to be nonhazardous. • Do not disconnect connections to this equipment unless power has been removed or the area is known to be nonhazardous. Secure any external connections that mate to this equipment by using screws, sliding latches, threaded connectors, or other means provided with this product. • Substitution of components may impair suitability for Class I, Division 2. • If this product contains batteries, they must only be changed in an area known to be nonhazardous.	**AVERTISSEMENT** **RISQUE D'EXPLOSION –** • Couper le courant ou s'assurer que l'environnement est classé non dangereux avant de débrancher l'équipement. • Couper le courant ou s'assurer que l'environnement est classé non dangereux avant de débrancher les connecteurs. Fixer tous les connecteurs externes reliés à cet équipement à l'aide de vis, loquets coulissants, connecteurs filetés ou autres moyens fournis avec ce produit. • La substitution de composants peut rendre cet équipement inadapté à une utilisation en environnement de Classe 1, Division 2. • S'assurer que l'environnement est classé non dangereux avant de changer les piles.

Specifications	
Indicators	None
Keyswitch Position	5
Module Location	1734-TB or -TBS wiring base assembly
Pointbus Current	None
Power Dissipation	None
Thermal Dissipation	None
Isolation Voltage (Continuous Voltage Withstand Rating)	Tested to 1600 Vrms for 60 seconds
Field Power Bus Supply Voltage Output Current	 10-28.8V dc, 120/240V ac 2A per point, 4A module max.
Dimensions Inches (Millimeters)	2.2H x 0.47W x 2.97L (56H x 12W x 75.5L)
Environmental Conditions	
Operational Temperature	IEC 60068-2-1 (Test Ad, Operating Cold), IEC 60068-2-2 (Test Bd, Operating Dry Heat), IEC 60068-2-14 (Test Nb, Operating Thermal Shock): -20 to 55°C (-4 to 131°F)
Storage Temperature	IEC 60068-2-1 (Test Ab, Unpackaged Nonoperating Cold), IEC 60068-2-2 (Test Bb, Unpackaged Nonoperating Dry Heat), IEC 60068-2-14 (Test Na, Unpackaged Nonoperating Thermal Shock): -40 to 85°C (-40 to 185°F)
Relative Humidity	IEC 60068-2-30 (Test Db, Unpackaged Nonoperating Damp Heat): 5 to 95% noncondensing
Shock Operating Non-operating	IEC 60068-2-27 (Test Ea, Unpackaged Shock) 30g peak acceleration 50g peak acceleration
Vibration	IEC 60068-2-6, (Test Fc, Operating) Tested 5g @ 10-500Hz
Enclosure Type Rating	None (open-style)
Conductors Wire Size	14 AWG (2.5mm^2) - 22 AWG (0.25mm^2) solid or stranded copper wire rated at 75°C or greater 3/64 inch (1.2mm) insulation maximum

Terminal Base Screw Torque	7 pound-inches (0.8Nm)
Mass	1.09 oz/30.9 grams
Field Wiring Terminations	1734-VTM, Series C 0 - Voltage Out1 - Voltage Out 2 - Voltage Out3 - Voltage Out 4 - Voltage Out5 - Voltage Out 6 - Voltage Out7 - Voltage Out 1734-CTM, Series C 0 - Common1 - Common 2 - Common3 - Common 4 - Common5 - Common 6 - Common7 - Common
Certifications (when product is marked)	**C-UL-US[1]-** UL Listed for Class I, Division 2, Groups A, B, C, and D Hazardous locations, certified for US and Canada

1 See the Product Certification link at `www.ab.com` for Declaration of Conformity, Certificates, and other certification details.

POINT I/O and POINTBus are trademarks of Rockwell Automation.

Rockwell Automation Support

Rockwell Automation provides technical information on the web to assist you in using its products. At http://support.rockwellautomation.com, you can find technical manuals, a knowledge base of FAQs, technical and application notes, sample code and links to software service packs, and a MySupport feature that you can customize to make the best use of these tools.

For an additional level of technical phone support for installation, configuration and troubleshooting, we offer TechConnect Support programs. For more information, contact your local distributor or Rockwell Automation representative, or visit http://support.rockwellautomation.com.

Installation Assistance

If you experience a problem with a hardware module within the first 24 hours of installation, please review the information that's contained in this manual. You can also contact a special Customer Support number for initial help in getting your module up and running:

United States	1.440.646.3223 Monday – Friday, 8am – 5pm EST
Outside United States	Please contact your local Rockwell Automation representative for any technical support issues.

New Product Satisfaction Return

Rockwell tests all of its products to ensure that they are fully operational when shipped from the manufacturing facility. However, if your product is not functioning and needs to be returned:

United States	Contact your distributor. You must provide a Customer Support case number (see phone number above to obtain one) to your distributor in order to complete the return process.
Outside United States	Please contact your local Rockwell Automation representative for return procedure.

www.rockwellautomation.com

Power, Control and Information Solutions Headquarters

Americas: Rockwell Automation, 1201 South Second Street, Milwaukee, WI 53204-2496 USA, Tel: (1) 414.382.2000, Fax: (1) 414.382.4444
Europe/Middle East/Africa: Rockwell Automation, Vorstlaan/Boulevard du Souverain 36, 1170 Brussels, Belgium, Tel: (32) 2 663 0600, Fax: (32) 2 663 0640
Asia Pacific: Rockwell Automation, Level 14, Core F, Cyberport 3, 100 Cyberport Road, Hong Kong, Tel: (852) 2887 4788, Fax: (852) 2508 1846

Publication 1734-IN024A-EN-E - March 2005 PN 957955-20

Copyright © 2005 Rockwell Automation, Inc. All rights reserved. Printed in the U.S.A.