Technical Data

Original Instructions

NEMA Space-saving Contactors and Starters Specifications

Bulletin Numbers 300, 305, 300S

Topic	Page
Summary of Changes	2
Product Line Overview	3
NEMA Space-saving Contactors	3
NEMA Safety Contactors	4
NEMA Non-combination Starters	5
Energy-saving Contactors	6
Product Selection	6
Bulletin 300 Energy-saving Contactors	6
Bulletin 305 Energy-saving Reversing Contactors	7
Bulletin 300S Energy-saving Safety Contactors	9
Accessories	10
Renewal Parts	17
Specifications	18
Size 00...3 Devices	19
Size 4...8 Devices	24
Conductors	30
Auxiliary Contacts	32
Life-Load Curves	33
Typical Wiring Diagrams	38
Approximate Dimensions	40
Size 00...0 A Contactors	40
Size 1 Contactors	41
Size 2 Contactors	43
Size 3 Contactors	45
Size 4...8 Contactors	46
Standard Contactors and Starters	50
Product Selection	50
Bulletin 300 Standard Contactors	50
Bulletin 305/309 Factory-assembled Reversing and Non-reversing Starters	51
Bulletin 305/309 User-assembled Reversing and Non-reversing Starters	52
Accessories	54
Control Modules	55
Renewal Parts	58
Specifications	60
Typical Wiring Diagrams	69
Life-Load Curves	70
Approximate Dimensions	75
Additional Resources	79

Summary of Changes

This publication contains the following new or updated information. This list includes substantive updates only and is not intended to reflect all changes.

Topic	Page
Reformatted document	throughout
Removed Size 4...9 standard contactors and starters	throughout
Added energy-saving contactors and accessories	6
Expanded Specifications for standard contactors and starters	60
Added Typical Wiring Diagrams for standard contactors and starters	69

NEMA Space-saving Contactors

Bulletin Number	**300**		**305**	
Description	Energy-saving Contactor	Standard Contactor	Energy-saving Reversing Contactor	Reversing Standard Contactor
NEMA Size	00...8	0...3	0...4 (factory assembled) 5...6 (user assembled)	0...3 (factory assembled)
Features	• Compact size • Sizes 00...5 - AC/DC electronic coil; with optional PLC interface • Sizes 6...8 - AC/DC with PLC interface • Integrated surge suppression • Panel or DIN Rail Mountable • Finger safe • Complete range of accessories • Meets global standards • Consists of environmentally friendly materials	• Compact size • AC or DC coil control • Panel or DIN Rail Mountable • Finger safe • Compatible with electronic overload relays • Complete range of accessories • Meets global standards • Consists of environmentally friendly materials	• Non-combination with NEMA contactor and electronic overload relay with optional communication module • Electronically and mechanically interlocked • Direct mount between contactor and overload • Consists of environmentally friendly materials	• Non-combination with NEMA contactor and electronic overload relay with optional communication module • Electronically and mechanically interlocked • Direct mount between contactor and overload • Consists of environmentally friendly materials
Contacts	• Sizes 0...3: - 3 power poles with: internal N.O. or N.C. auxiliary contact or 4 power poles. • Sizes 1...3: - 3 power poles with side-mounted N.O. / N.C. auxiliary contact or 4 power poles • Sizes 4...8: - 3 main poles with 2 auxiliary contacts (1 N.O. and 1 N.C.)	• Size 0: - 3 power poles with internal N.O. auxiliary contact • Sizes 1...3: - 3 power poles with side-mounted N.O. auxiliary contact	• Sizes 00...0: - 3 power poles with internal - N.O. auxiliary contact or 4 power poles. • Sizes 1...3: - 3 power poles with side-mounted N.O. / N.C. auxiliary contact or 4 power poles • Size 4: - 3 main poles with auxiliary contacts (1 N.O. and 1 N.C.)	• Size 0: - 3 power poles with internal N.O. auxiliary contact • Sizes 1...3: - 3 power poles with side-mounted N.O. auxiliary contact
Coil Voltages	• 20...500V, 50/60 Hz/DC	• AC = 12...600V, 50/60Hz • DC = 9...250V	• 20...500V, 50/60 Hz/DC	• AC = 12...600V, 50/60Hz • DC = 9...250V
Coil	Electronic	Electronic and conventional	Electronic	Electronic and conventional
Optional Accessories	• Side- or front-mount auxiliary contacts • Mechanical interlocks • Terminal lugs • Terminal shields • Connecting bars	• Front or side-mount auxiliary contacts • Surge suppressors • Electronic or pneumatic timers • Mechanical interlocks	• Terminal lugs • Terminal shields • Connecting bars	• Surge suppressors • Electronic or pneumatic timers
Product Selection	page 6	page 50	page 7	page 51

NEMA Safety Contactors

Bulletin No.	**300S**
Description	Energy-saving Safety Contactor
NEMA Size	00...7
Features	• Mirror contact performance on auxiliary contacts • Red N.C. low-power auxiliary contacts used for feedback circuit • SUVA third-party certification • Sizes 00...5 - AC/DC electronic coil; with optional PLC interface • Sizes 6...8 - AC/DC electronic coil with PLC interface - "Mirror Contact" symbol on front
Contacts	3 main poles with N.C. mirror feedback contacts
Coil Voltages	20...500V, 50/60 Hz/DC
Optional Accessories	• Side-mount auxiliary contacts • Terminal shields • Terminal lugs • Terminal enlargements • Terminal extensions • Connection bars for 140G molded case circuit breakers, 140MG motor protection circuit breakers, and 140MG motor circuit protectors
Standards Compliance	• EN/IEC 60947-4-1 • IEC 60947-4-1, Annex F — Mirror Contacts • UL 60947-4-1 • CSA C22.2, No. 60947-4-1
Certifications	• cULus Listed (File No. E41850; Guide No. NLDX, NLDX7) • CE Marked • CCC • UL • CSA • EAC • RCM (C-tick) • SUVA Third-Party Certified • KC
Product Selection	page 9

NEMA Non-combination Starters

Bulletin Number	**305**	**309**
Description	Standard Reversing Starter	Standard Starter
NEMA Size	0...3 (factory assembled)	0...3 (factory assembled)
Features	• Compact size • AC or DC coil control • Integrated surge suppression • Electronically and mechanically interlocked • Panel or DIN Rail Mountable • Direct mount between contactor and overload • Consists of environmentally friendly materials	• Compact size • AC or DC coil control • Integrated surge suppression • Electronically and mechanically interlocked • Panel or DIN Rail Mountable • Direct mount between contactor and overload • Consists of environmentally friendly materials
Contacts	• Size 0: - 3 power poles with internal N.O. auxiliary contact • Sizes 1...3 - 3 power poles with side-mounted N.O. auxiliary contact	• Size 0: - 3 power poles with internal N.O. auxiliary contact • Sizes 1...3 - 3 power poles with side-mounted N.O. auxiliary contact
Coil Voltages	• AC = 12...600V, 50/60Hz • DC = 9...250V	• AC = 12...600V, 50/60Hz - DC = 9...250V
Coil	Electronic and conventional	Electronic and conventional
Product Selection	page 51	

Product Selection

Bulletin 300 Energy-saving Contactors

- NEMA Sizes 00...8
- Compact dimensions (space-saving design)
- Electronic coils
  - AC/DC
  - Wide voltage range
  - Low power pick-up and hold-in
  - Optional PLC interface
- Direct-on-line or reversing
- 3 Main contacts
- Complete range of accessories
- Environmentally friendly
- Guarded Terminals

Size 1

Size 4

Size 8

The Bulletin 300-E contactor family, along with a wide range of accessories, provides the most compact and flexible NEMA contactor system available.

3-Pole AC- and DC-Operated Contactors

NEMA Size	Continuous Ampere Rating [A]	Max. Horsepower Rating— Full-load Current Must Not Exceed Continuous Ampere Rating (60 Hz) [Hp]						Auxiliary Contacts		Cat No.
		Single-phase		Three-phase						
		115V	230V	200V	230V	460V	575V	N.O.	N.C.	
00	9	1/3	1	1.5	1.5	2	2	1	-	300-T0⊗9310
0	18	1	2	3	3	5	5	1	-	300-A0⊗9310
1	27	2	3	7.5	7.5	10	10	1	1	300-B0⊗9311
2	45	3	7.5	10	15	25	25	1	1	300-C0⊗9311
3	90	7.5	15	25	30	50	50	1	1	300-D0⊗9311
4	135	-	-	40	50	100	100	1	1	300-E0⊗9311 (1)
5	270	-	-	75	100	200	200	1	1	300-F0⊗9311
6	540	-	-	150	200	400	400	1	1	300-G0⊗9311
7	810	-	-	-	300	600	600	1	1	300-H0⊗9311
8	1215	-	-	-	450	900	900	1	1	300-J0⊗9311

(1) To order with built-in terminal lugs, add the letter "**-L**" to the end of the catalog number (for example, 300-E0⊗9311-L).

⊗ Coil voltage code and terminal position—see page 7

4-Pole AC- and DC-operated Direct-on-line Contactors

NEMA Size	Rated Current at 40 °C [A]		Main Poles		Auxiliary Contacts		Cat No.
	I_e	UL General Use (enclosed)					
	AC-1 (690V)	600V	N.O.	N.C.	N.O.	N.C.	
00	25	25	4	0	0	0	300-T0⊗9400
0	30	30	4	0	0	0	300-A0⊗9400
1	45	45	4	0	0	0	300-B0⊗9400
2	70	60	4	0	0	0	300-C0⊗9400
3	125	105	4	0	0	0	300-D0⊗9400

⊗ Coil voltage code and terminal position—see page 8

Bulletin 305 Energy-saving Reversing Contactors[a]

- NEMA Sizes 00...4
- Electronic coils
  - AC/DC
  - Wide voltage range
  - Low power pick-up and hold-in
  - Optional PLC interface
- Reversing contactors
- 3 Main contacts

Size 00

Size 1

3-Pole AC- and DC-operated Reversing Contactors

NEMA Size	Continuous Ampere Rating [A]	Max. Horsepower Rating— Full-load Current Must Not Exceed Continuous Ampere Rating (60 Hz) [Hp]				Auxiliary Contacts		Interlock Type	Cat No.
		Hp (60 Hz)							
		200V	230V	380...415V	460...575V	N.O.	N.C.		
00	9	1.5	1.5	2	2	2	2 (1)	Electrical / Mechanical	305-T0⊗-23 (2)
						4	2	Mechanical	305-T0⊗-23Z
0	18	3	3	5	5	2	2 (1)	Electrical / Mechanical	305-A0⊗-23 (2)
						4	2	Mechanical	305-A0⊗-23Z
1	27	7.5	7.5	10	10	2	4 (1)	Electrical / Mechanical	305-B0⊗-23 (2)
						2	2	Mechanical	305-B0⊗-23Z
2	45	10	15	25	25	2	2	Mechanical	305-C0⊗-23Z
3	90	25	30	50	50	2	2	Mechanical	305-D0⊗-23Z
4	135	40	50	100	100	1	1	Mechanical	305-E0⊗-23Z

(1) Two N.C. auxiliary contacts are supplied as part of the mechanical/electrical interlock.
(2) For AC voltages only.

⊗ Coil voltage code and terminal position—see page 8

⊗ Coil Voltage Codes

For 3-Pole Direct-on-line Contactors

The Cat. No. as listed is incomplete. Select a coil voltage code from the table below to complete the Cat. No. Example: 300-B0J9311.

Electronic Coils	V (1)	12-20V DC	24V DC	24-60V AC, 20-60V DC	48-130V AC/DC	100-250V AC/DC	250-500V AC/DC
NEMA Size 00...5	Standard AC/DC	–	–	J	Y	D	B
NEMA Size 00...1	Low Consumption AC/DC	E0	–	EJ	–	–	–
NEMA Size 00...1	Low Consumption/ Faster Drop-out DC	–	0J	–	–	–	–
NEMA Size 4...5 (2)	Standard AC/DC with PLC Input	–	–	–	–	ED	EN
NEMA Size 6...7		–	–	EJ (3)	EY	ED	EN
NEMA Size 8		–	–	–	–	ED	–

(1) AC voltages are at 50/60 Hz
(2) When ordering coil with PLC input, the PLC input must be used
(3) 24V...60V DC only

(a) For Bul 300 contactors with standard coils, see page 50.

For 3-Pole Reversing Contactors

The Cat. No. as listed is incomplete. Select a coil voltage code from the table below to complete the Cat. No. Example: 305-B0J23

Electronic Coils	V (1)	12-20V DC	24V DC	24-60V AC, 20-60V DC	48-130V AC/DC	100-250V AC/DC	250-500V AC/DC
NEMA Size 00...4	Standard AC/DC	–	–	J	Y	D	B
NEMA Size 00...1	Low Consumption AC/DC	EQ	–	EJ	–	–	–
NEMA Size 00...1	Low Consumption/ Faster Drop-out DC	–	QJ	–	–	–	–
NEMA Size 4 (2)	Standard AC/DC with PLC Input	–	–	–	–	ED	EN

(1) AC voltages are at 50/60 Hz
(2) When ordering coil with PLC input, the PLC input must be used

PLC Interface

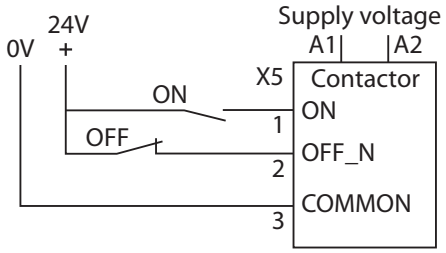

For 4-Pole Contactors

The Cat. No. as listed is incomplete. Select a coil voltage code from the table below to complete the Cat. No. Example: 300-B0J9400.

Electronic Coils	V (1)	12-20V DC	24V DC	24-60V AC, 20-60V DC	48-130V AC/DC	100-250V AC/DC	250-500V AC/DC
NEMA Size 00...3	Standard AC/DC	–	–	J	Y	D	B
NEMA Size 00...1	Low Consumption AC/DC	EQ	–	EJ	–	–	–
NEMA Size 00...1	Low Consumption/Faster Drop-out DC	–	QJ	–	–	–	–

(1) AC voltages are at 50/60 Hz

Bulletin 300S Energy-saving Safety Contactors

- NEMA Sizes 00...4
- Electronic coils
  - AC/DC
  - Wide voltage range
  - Low power pick-up and hold-in
  - Optional PLC interface
- 3 Main Contacts
- Direct-on-line
- Low-power auxiliary contacts for feedback circuit
- Mirror contact performance
- Compact dimensions (space-saving design)

Size 00

Size 2

3-Pole AC- and DC-operated Safety Contactors

NEMA Size	Continuous Ampere Rating [A]	Max. Horsepower Rating— Full-load Current Must Not Exceed Continuous Ampere Rating (60 Hz) [Hp]						Auxiliary Contacts			Direct-on-line Contactor
		Single-phase		Three-phase							
		115V	230V	200V	230V	460V	575V	N.O.	N.C.	N.C.(1)	Cat No.
00	9	1/3	1	1.5	1.5	2	2	3	-	2	300S-T0⊗9332C
0	18	1	2	3	3	5	5	3	-	2	300S-A0⊗9332C
1	27	2	3	7.5	7.5	10	10	2	-	2	300S-B0⊗9322C
2	45	3	7.5	10	15	25	25	2	-	2	300S-C0⊗9322C
3	90	7.5	15	25	30	50	50	2	-	2	300S-D0⊗9322C
4	135	—	—	40	50	100	100	1	1	1	300S-E0⊗9312C (2)
5	270	—	—	75	100	200	200	1	1	1	300S-F0⊗9312C
6	540	—	—	150	200	400	400	1	1	1	300S-G0⊗9312C
7	810	—	—	—	300	600	600	1	1	1	300S-H0⊗9312C

(1) The N.C. contact meets IEC 60947-4-1 Annex F requirements for mirror contact performance.
(2) To order with built-in terminal lugs, add the letter "**-L**" to the end of the catalog number (for example, 300S-E0⊗9312CL).

⊗ Coil Voltage Codes

The Cat. No. as listed is incomplete. Select a coil voltage code from the table below to complete the Cat. No. Example: 300S-B0D9322C

Electronic Coils	V(1)	12-20V DC	24V DC	24-60V AC, 20-60V DC	48-130V AC/DC	100-250V AC/DC	250-500V AC/DC
NEMA Size 00...5	Standard AC/DC	—	—	J	Y	D	B
NEMA Size 00...1	Low Consumption AC/DC	EQ	—	EJ	—	—	—
	Low Consumption/ Faster Drop-out DC	—	QJ	—	—	—	—
NEMA Size 4...5 (2)	Standard AC/DC with 24V DC PLC Interface	—	—	—	—	ED	EN
NEMA Size 6...7		—	—	EJ (3)	EY	ED	EN

(1) AC voltages are at 50/60 Hz
(2) When ordering coil with PLC input, the PLC input must be used
(3) 24V...60V DC only

PLC Interface

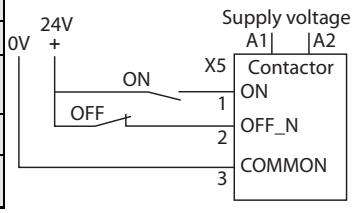

Accessories

Auxiliary Contact Blocks with Standard Auxiliary Contacts

	Description	N.O.	N.C.	Connection Diagrams	For Use With NEMA Size	Cat. No.
	Auxiliary Contact Blocks for Front Mounting • 1-pole • Quick and easy mounting without tools • Screw connection terminals • Switching down to 12V, 3mA • Mirror contact performance to the main contactor poles • L= Late break N.C./early make N.O.	1	0	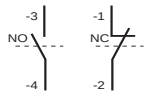	00...3	100-EFA10
		0	1			100-EFA01
		1L	0	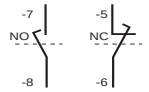	00...3	100-EFAL10
		0	1L			100-EFAL01
	Auxiliary Contact Blocks for Front Mounting • 4-pole • Quick and easy mounting without tools • Screw connection terminals • Switching down to 12V 3mA • Mirror contact performance to the main contactor poles	2	2	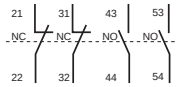	00...0	100-EFC22
		3	1	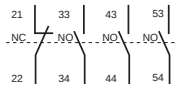		100-EFC31
		1	3	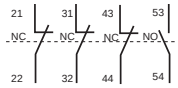		100-EFC13
		0	4	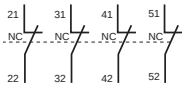		100-EFC04
		2	2	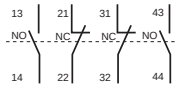	0...3 (3-pole) 00...3 (4-pole)	100-EFB22
		3	1	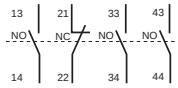		100-EFB31
		4	0	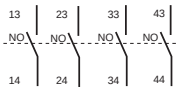		100-EFB40
		0	4	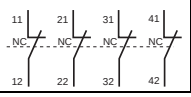		100-EFB04

Auxiliary Contact Blocks with Standard Auxiliary Contacts (Continued)

	Description	N.O.	N.C.	Connection Diagrams	For Use With NEMA Size	Cat. No.
	Auxiliary Contact Blocks for Front Mounting • 4-pole • Quick and easy mounting without tools • Screw connection terminals • Switching down to 12V 3mA • Mirror contact performance to the main contactor poles	2	2	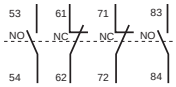	00...3	100-EFA22
		3	1	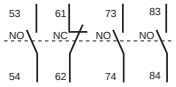		100-EFA31
		4	0	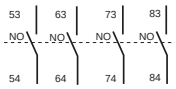		100-EFA40
		1	3	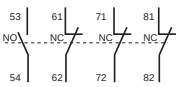		100-EFA13
		0	4	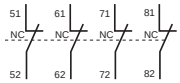		100-EFA04
	Auxiliary Contact Blocks for Front Mounting with A1/A2 Coil Terminal Blocks • 2-pole • Quick and easy mounting without tools • Screw connection terminals • Switching down to 12V, 3mA • Mirror contact performance to the main contactor poles	1	1	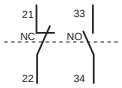	00...0	100-EFC11T
		1	1	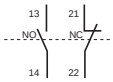	1...2 (3-pole) 00...2 (4-pole)	100-EFB11T
	Auxiliary Contact Blocks for Side Mounting • 2-pole • Two-way numbering for right or left mounting on the contactor • With or without sequence terminal designations • Quick and easy mounting without tools • Screw connecting terminals • Switching down to 12V, 3mA • Mirror contact performance to the main contactor poles	1	1	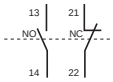	1...3	100-ESB11
		1	1		00...3	100-ESA11
	Auxiliary Contact Blocks for Front Mounting for Severe Industrial Applications • 1-pole • Available in two IP degrees of ingress protection – B, B2 with built-in microswitch, IP40 degree of protection – (IP20 terminals) – B3, B4 with built-in microswitch, IP67 degree of protection – (IP20 terminals), 250V, 2 A max. • Available in two voltage and current ratings – B, B3: 125V, 0.1 A max., 3V, 1 mA min. – B2, B4: 250V, 2 A max., 17V, 1 mA min.	1	0	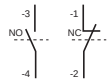	00...3	100-ESA10B
		0	1			100-ESA01B
		1	0			100-ESA10B2
		0	1			100-ESA01B2
		1	0			100-ESA10B3
		0	1			100-ESA01B3
		1	0			100-ESA10B4
		0	1			100-ESA01B4
	Auxiliary Contact Blocks for Side Mounting with Sequence Terminal Designations • 2-pole • Two-way numbering for right or left mounting on the contactor • Quick and easy mounting without tools • Mirror contact performance to the main contactor poles • Low power switching down to 24V 50 mA	1	1	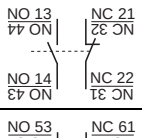	4...5 left or right inside mounting	100-ES1-11
		1	1	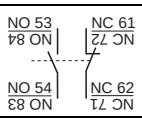	4...5 left or right outside mounting	100-ES2-11

Auxiliary Contact Blocks with Standard Auxiliary Contacts (Continued)

	Description	N.O.	N.C.	Connection Diagrams	For Use With NEMA Size	Cat. No.
	Low-power Auxiliary Contact Blocks for Side Mounting with Sequence Terminal Designations (1) • 1-pole • Two-way numbering for right or left mounting on the contactor • Quick and easy mounting without tools • Mirror contact performance to the main contactor poles • Electronic compatible, 3V 1 mA	1	0	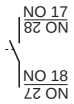	4...5 left or right inside or outside mounting	100-ES1-B10
		0	1	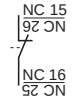	4...5 left or right inside or outside mounting	100-ES1-B01
	Auxiliary Contact Blocks for Side Mounting with Sequence Terminal Designations • 2-pole • Two-way numbering for right or left mounting on the contactor • Quick and easy mounting without tools • Mirror contact performance to the main contactor poles • Low power switching down to 24V 50 mA	1	1	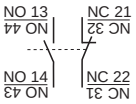	6...8 left or right inside mounting	100-ES3-11
		1	1	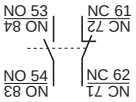	6...8 left or right outside mounting	100-ES4-11
	Low-power Auxiliary Contact Blocks for Side Mounting with Sequence Terminal Designations (1) • 1-pole • Two-way numbering for right or left mounting on the contactor • Quick and easy mounting without tools • Mirror contact performance to the main contactor poles • Electronic compatible, 3V 1 mA	1	0		6...8 left or right inside or outside mounting	100-ES3-B10
		0	1	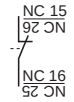	100-E400...E2650, left or right inside or outside mounting	100-ES3-B01

(1) No auxiliary contact blocks can be mounted on the outside of the 100-ES1-B* or 100-ES3-B* devices.

Mechanical Interlocks

	Description		Connection Diagrams	For Use With NEMA Size	Cat. No.
	Mechanical Interlock • For interlocking of two contactors • Two fixing clips included	Mechanical only, without auxiliary contacts		00...1 (3-pole) 00...1 (4-pole)	100-EMCA00A
				2...3 (3-pole) 2...3 (4-pole)	100-EMCA00B
	Mechanical Interlock • For interlocking of two contactors. • Interlocking of different sizes possible	Mechanical only, without auxiliary contacts		4...5	100-EM1-00
				6...7 (1)	100-EM2-00
				8 (1)	100-EM3-00
	Rod for vertical mounting size 6...7 reversing contactors				100-EVR750
	Mechanical and Electrical Interlock • For interlocking of two contactors • Two fixing clips, a mechanical interlock and an electrical interlock block with A2-A2 connection included • Front-face connection of the electrical interlock block connects the 2 built-in N.C. interlocking contacts with the two coils • The electrical diagram is used with the A2-A2 connection	Mechanical/ electrical interlock	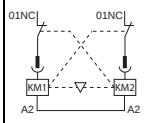	00...1 (3-pole) 00...1 (4-pole)	100-EMCA02

(1) Mounting plate ordered separately

Electronic Timers

	Description		N.O.	N.C.	Connection Diagrams	For Use With NEMA Size	Cat. No.
	Electronic Timing Module—ON-Delay • Delay of the contactor solenoid • The contactor is energized at the end of the delay time	ON-Delay 0.1...1 s 1...10 s 10...100 s	1	1	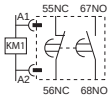	00...3	100-ETA
	Electronic Timing Module—OFF-Delay • Delay of the contactor solenoid • After interruption of the control signal, the contactor is de-energized a the end of the delay time	OFF-Delay 0.1...1 s 1...10 s 10...100 s	1	1	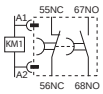	00...3	100-ETB

DC Interface Module

	Description	For Use With NEMA Size	Pkg. Qty.	Cat. No.
	DC Interface • Receives 24V DC signals from PLCs or other low output power sources and switches AC control power to operate the coils of the contactor • Coil voltage: 24...250V AC 50/60 Hz • Rated control circuit voltage U_C: 24VDC	00...3	1	100-EJE
			10	100-EJEM

Mechanical Latch

	Description	Rated Voltage [V]		Connection Diagram	For Use With NEMA Size	Cat. No.
		V AC, 50/60 Hz	V DC			
	Mechanical Latch • Ensures contactor or contactor relay is switched on even if there is a voltage failure • Opening controlled either electrically by AC or DC impulse or manually by button • Front mounting	24...60	24...60	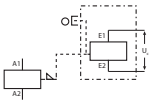	00...2	100-EFL11EJ
		48...130	48...130			100-EFL11EY
		100...250	100...250			100-EFL11ED
		250...500	250...500			100-EFL11EN
		24...60	24...60		3	100-EFL12EJ
		48...130	48...130			100-EFL12EY
		100...250	100...250			100-EFL12ED
		250...500	250...500			100-EFL12EN

Additional Coil Terminal Block

	Description	For Use With NEMA Size	Pkg. Qty.	Cat. No.
	Additional Coil Terminal Block • Allows bottom access to the coil terminals in addition to top access	00...3	10	100-ECT

Protective Covers

	Description	For Use With NEMA Size	Pkg. Qty.	Cat. No.
	Protective Cover • Provides protection against unintended manual operation • Sealable and Transparent	00...3	10	100-ESCCA
		00...3 (4-pole only)	10	100-ESCFA

Functional Markers

	Description	For Use With NEMA Size	Pkg. Qty.	Cat. No.
	Functional Markers • 256 markers (16 per card) • 7 x 20 mm (0.276 x 0.787 in)	00...3	16	100-EFMS

Terminal Block

	Description	For Use With NEMA Size	Pkg. Qty.	Cat. No.
	Additional Terminal Blocks • Designed to increase wire size capacity of 3-pole contactors • 3-pole terminal blocks with IP20 terminals	1	2	100-ECT38

Terminal Shrouds

	Description	No. of Poles	For Use With NEMA Size	Cat. No.
	Terminal Shrouds • IP20 terminal protection against accidental direct contact after wiring (EN 50274) • 3-pole and 4-pole	3-pole	2	100-ESC65
		3-pole	3	100-ESC96
		4-pole	2	100-ESC52
		4-pole	3	100-ESC80

Paralleling Terminals

	Description	For Use With NEMA Size	Cat. No.
	Paralleling Terminals • To connect poles in parallel and thus increase the AC-1 load passing through the flow path made up of the parallel-connected poles	00...0	100-ECP16
		1	100-ECP38

Terminal Lugs

	Description	Wire Sizes	For Use With NEMA Size	Cat. No.
	Terminal Lug Kit • Standard on Size 4 contactors • Set of two	2 x 6 AWG...3/0 AWG	4	100-ECL146
	Terminal Lugs • Set of three	4 AWG...400 MCM	5	100-ETL370
		(2x) 4 AWG...500 MCM	5	100-ETL370B
		(2x) 2/0 AWG...500 MCM	6	100-ETL580
		(3x) 2/0 AWG...500 MCM	7	100-ETL750
		(4x) 1/0 AWG...750 MCM	8	100-ETL1060
		(6x) 1/0 AWG...750 MCM	8	100-ETL1060B

Terminal Shrouds and Shields

	Description	Wires with Compression Lugs	Contactor with Terminal Lugs	For Use With NEMA Size	Cat. No.
	Terminal Shrouds • Not applicable when using 105-PW* or 170-PW* power wiring kits • Pkg. Qty:2	X	–	4	100-ETS146L
		–	X	5	100-ETS370L(1)
		X	–	5	100-ETS370C
		–	X	6	100-ETS460L
		X	–	6	100-ETS460C
		–	X	7	100-ETS750L
		X	–	7...8	100-ETS750C
	IP20 terminal shield between contactor and 193-E overload relay on an assembled direct-on-line starter			4	100-ETC146
	IP20 terminal shield between contactor and 193-E overload relay on an assembled reversing starter			4	100-ETCR146

(1) Not applicable when using the 100-ETL370B lug kit.

Power Wiring Kits

	Description	For Use With NEMA Size		Cat. No.
	Reversing Power Wiring Kits • Used to connect the main poles of two 3-pole contactors mounted side by side • 1 line-side paralleling and 1 load-side reversing connection • Insulated, solid copper bars	00		105-PW16
		1		105-PW38
		2		105-PW65
		3		105-PW96
	Reversing Power Wiring Kits	4		105-PW146
		5		105-PW370(1)
		6		105-PW460 (2)
		7		105-PW750 (2)
	Wye-Delta Power Wiring Kits • Used to connect the main poles of the Line, Delta and Star contactors of a star-delta starter. • Connection sets are made up of: – Line contactor / delta contactor, line-side phase-to-phase connection – Delta contactor / star contactor, load-side connection in parallel – Star contactor: star point line-side – Insulated, solid copper bars	**Delta Contactor (1M/2M)**	**Wye Contactor (1S)**	**Cat. No.**
		00...0	00...0	170-PW16
		1	1	170-PW38
		2	2	170-PW65
		3	3	170-PW96
	Wye-Delta Power Wiring Kits	**Delta Contactor (1M/2M)**	**Wye Contactor (1S)**	**Cat. No.**
		4	4	170-PW146
		–	4	170-PW190
		5	–	170-PW265
		5	5	170-PW370
		6	6	170-PW460
		7	6	170-PW580
		7	7	170-PW750
	Shorting Bars		4	170-PWY146
			5	170-PWY370
			6	170-PWY460
			7	170-PWY750

(1) Kits includes one set of terminal extensions. If 100-ETL* terminal lugs are to be used on line and load side of reversing contactor, and second set of 100-ETX terminal extensions is required.
(2) If 100-ETL* terminal lugs are to be used on line and load side of reversing contactor, two sets of 100-ETX terminal extensions are also required.

Mounting Plates

	Description	For Use With NEMA Size	Cat. No.
	For direct-on-line starters	4	100-EMS146
	For reversing contactors	4	100-EMR146
		5	100-EMR370
		6	100-EMR460
		7	100-EMR750
	For reversing starters	4	100-EMRS146

Connectors

	Description	For Use With Circuit Breaker	For Use With NEMA Contactor Size	Cat. No.
	For connection to 140G or 140MG • Connection between contactors/starters and molded case circuit breakers. • These connection sets are solid copper bars.	140G-H, 140MG-H	4	100-PCE1
		140G-I, 140MG-I	4	100-PCE2
		140G-J, 140MG-J	4	100-PCE3
		140G-K, 140MG-K	5	100-PCE5
		140G-M, 140MG-M	6...7	100-PCE6
		140G-K, 140MG-K	6...7	100-PCE7

Terminal Accessories

	Description	For Use With NEMA Contactor Size	Cat. No.
	Terminal Enlargements • Enlargement pieces designed to increase the width of the contactor terminal pads in order to allow larger connections to be mounted.	100-E116...100-E146	100-ETE146
		100-E265...100-E370	100-ETE370
		100-E400...100-E460	100-ETE460
		100-E580...100-E750	100-ETE750
	Terminal Extensions • Extension pieces designed to extend the main terminals of contactors for combined mounting of contactors and connection sets	100-E116...100-E146	100-ETX146
		100-E265...100-E370	100-ETX370
		100-E400...100-E460	100-ETX460
		100-E580...100-E750	100-ETX750

Renewal Parts

Coil Modules

	Description	For Use With NEMA Size	Voltage	Cat. No.
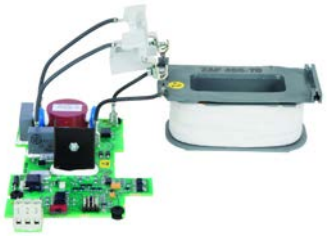	Coil Module Kit	4	24...60V AC/DC	CE901
			48...130V AC/DC	CE902
			100...250V AC/DC	CE903
			250...500V AC/DC	CE904
			100...250V AC/DC w/ PLC Interface	CEE903
			250...500V AC/DC w/ PLC Interface	CEE904
		5	24...60V AC/DC	TG909
			48...130V AC/DC	TG910
		5	100...250V AC/DC w/ PLC Interface	CFE911
			250...500V AC/DC w/ PLC Interface	CFE912
		6	24...60V DC w/ PLC Interface	THE901
			48...130V AC/DC w/ PLC Interface	THE902
			100...250V AC/DC w/ PLC Interface	THE903
			250...500V AC/DC w/ PLC Interface	THE904
		7	24...60V DC w/ PLC Interface	TJE901
			48...130V AC/DC w/ PLC Interface	TJE902
			100...250V AC/DC w/ PLC Interface	TJE903
			250...500V AC/DC w/ PLC Interface	TJE904
		8	100...250V AC/DC w/ PLC Interface	TKE903 (1)
				TKE904 (2)

(1) One set of two coils
(2) Printed circuit board

Contact Kits

	Description	For Use With NEMA Size	Cat. No.
	Contact Kits • 3 poles per kit	4	100-EA146
		5	100-EA265
		5	100-EA305
		6	100-EA460
		7	100-EA750
		8	100-EA1060
	Arc Chutes • 3 poles per kit	6	100-EC460
		7	100-EC750
		8	100-EC1060

Terminal and Mounting Hardware Kits

	Description	For Use With NEMA Size	Cat. No.
	Terminal and Mounting Hardware Kits	4	100-EHS146(1)
		4	100-EHF146
		5	100-EHF370
		6	100-EHF460
		7	100-EHF750
		8	100-EHF2050

(1) Mounting hardware only.

Specifications

Table 1 - General Specifications—Bulletin 300, 300S, 305

			Size 00...2	Size 3...8
Rated Isolation Voltage U_i	IEC	[V]	690	1000
	UL, CSA	[V]	600	600
Rated Impulse Voltage Withstand U_{imp}		[kV]	6	8
Rated Voltage U_e	AC 50/60 Hz	[V]	115, 200, 230, 240, 400, 415, 460 500, 575, 690, 1000	
	DC	[V]	24, 48, 110, 220, 440	
Electromagnetic compatibility			IEC 60947-1 - Environment A and B(1)	
Insulation Class of the Coil			Class F per IEC 60947-4-1	
Rated coil frequency			AC 50/60 Hz, DC	
Ambient Temperature	Storage	[°C (°F)]	-60...+80 (-76...+176)	-40...+70 (-40...+158)
	Operation at rated voltage	[°C (°F)]	-40...+70 (-40...+158)	-40...+70 (-40...+158)
Max. Altitude of Installation Site		[m]	3000	
Climatic Withstand			Category B according to IEC 60947-1, Annex Q	
Resistance to Shock			IEC 60068-2-27	
Resistance to Vibration			IEC 60068-2-6	
Protection Class	Contactor main contacts		IP2X(2)	IP00
	Contactor coil terminals		IP2X (in connected state)	
	Auxiliary contacts		IP2X (in connected state)	
Functional Safety Data (Size 4...7): Usable for ISO 13849-1 and IEC 62061. Data is based on the B10 value given and: - Mission time/Proof test interval of 20 years.	4...5		B10: 1.0E+06 operations at 50% max. AC-3 load; failure ratio: 75% failure to open, 25% failure to close	
	4		B10: 5.0E+06 operations, mechanical only; failure ratio: 50% failure to open, 50% failure to close	
	5		B10: 2.5E+06 operations, mechanical only; failure ratio: 50% failure to open, 50% failure to close	
	6...7		B10: 5.0E+05 operations at 50% max. AC-3 load; failure ratio: 75% failure to open, 25% failure to close	
	6		B10: 3.0E+06 operations, mechanical only; failure ratio: 50% failure to open, 50% failure to close	
	7		B10: 7.0E+05 operations, mechanical only; failure ratio: 50% failure to open, 50% failure to close	

(1) 300S Size 00...1 only.
(2) 300S Size 2...3 meet IP2X when used with 100-ESC... terminal shrouds.

Table 2 - Standards Compliance and Certifications

Standards Compliance	Certifications
• IEC/EN 60947-1, Low-voltage switchgear and controlgear	• cULus, File No. E41850 / E196120 (contactors, reversing contactors)
• IEC/EN 60947-4-1, Low-voltage switchgear and controlgear, Contactors and motor-starters	• UL
• IEC/EN 60947-5-1, Low-voltage switchgear and controlgear, Control circuit devices and switching elements	• CSA
	• CCC
• UL 60947-4-1, Industrial Control Equipment (USA)	• EAC
• CSA C22.2 No. 60947-4-1 Industrial Control Equipment (Canada).	• RCM
• Mechanically Linked Contacts: IEC 60947-5-1, Annex L (300S Size 00...3 with all 100-E* front- and side-mounted N.C. auxiliary contacts)	• RINA
	• KC
• Mirror Contacts: IEC 60947-4-1, Annex F (300S Size 4...7 with all 100-ES* side-mounted N.C. auxiliary contacts)	• CE
	• SUVA
	• SEMI-F47 (Conditions of use on request)

Size 00...3 Devices

Table 3 - Main Circuits

300, 305, 300S			NEMA Size				
			00	0	1	2	3
AC-1 Active Power Load (50/60Hz); Ambient temperature 40 °C (104 °F)							
Rated Operational Current, I_e	690V	[A]	25	28	45	70	125
	1000V	[A]	—	—	—	—	35
Rated Operational Power, P_e	230	[kW]	10	11	18	28	50
	240	[kW]	10	12	19	29	52
	400	[kW]	17	19	31	48	87
	415	[kW]	18	20	32	50	90
	500	[kW]	22	24	39	61	108
	690	[kW]	30	33	54	84	149
	1000	[kW]	—	—	—	—	61
Ambient temperature 60 °C (140 °F)							
Rated Operational Current, I_e	690V	[A]	25	28	40	60	100
	1000V	[A]	—	—	—	—	35
Rated Operational Power, P_e	230	[kW]	10	11	16	24	40
	240	[kW]	10	12	17	25	42
	400	[kW]	17	19	28	42	69
	415	[kW]	18	20	29	43	72
	500	[kW]	22	24	35	52	87
	690	[kW]	30	33	48	72	120
	1000	[kW]	—	—	—	—	61
Ambient temperature 70 °C (158 °F)							
Rated Operational Current, I_e	690V	[A]	22	24	32	50	85
	1000V	[A]	—	—	—	—	35
Rated Operational Power, P_e	230	[kW]	9	10	13	20	34
	240	[kW]	9	10	13	21	35
	400	[kW]	15	17	22	35	59
	415	[kW]	16	17	23	36	61
	500	[kW]	19	21	28	43	74
	690	[kW]	26	29	38	60	102
	1000	[kW]	—	—	—	—	61
With Conductor sizes		[mm^2]	4	6	10	25	50

Table 4 - Main Circuits

300, 305, 300S			NEMA Size				
			00	0	1	2	3
Switching of 3-phase Motors; (50Hz) Ambient temperature 60 °C (140 °F) AC-2, AC-3							
Rated Operational Current, I_e	220-240V	[A]	9	12	26	40	80
	380-400V	[A]	9	12	26	40	80
	415V	[A]	9	12	26	40	80
	440V	[A]	9	12	26	40	80
	500V	[A]	9.5	12.5	23	40	65
	690V	[A]	7	9	17	25	49
	1000V	[A]	—	—	—	—	25
Rated Operational Power, P_e	220-240V	[kW]	2.2	3	6.5	11	22
	380-400V	[kW]	4.0	5.5	11	18.5	37
	415V	[kW]	4.0	5.5	11	22	45
	440V	[kW]	4.0	5.5	15	22	45
	500V	[kW]	5.5	7.5	15	22	45
	690V	[kW]	5.5	7.5	15	22	45
	1000V	[kW]	—	—	—	—	35
Load Carrying Capacity per UL/CSA							
General Purpose Current (enclosed)	600V	[A]	13.8	16.0	24	34	80
Rated Operational Current and Power (enclosed), 1-Phase	120V	[A]	13.8	16.0	24	34	80
	240V	[A]	10.0	12.0	17	40	68
	120V	[Hp]	0.75	1	2	3	7.5
	240V	[Hp]	1.5	2	3	7.5	15
Rated Operational Current and Power (enclosed), 3-Phase	200-208	[A]	7.8	11	25.3	32.2	78.2
	220-240	[A]	6.8	9.6	22.0	42	80
	440-480	[A]	7.6	11	21.0	40	77
	550-600	[A]	9	11	22.0	41	77
	200-208	[Hp]	2	3	7.5	10	25
	220-240	[Hp]	2	3	7.5	15	30
	440-480	[Hp]	5	7.5	15.0	30	60
	550-600	[Hp]	7.5	10	20.0	40	75
Rated Operational Current and Power (enclosed), with 3 poles in series	125V DC	[A]	9.5	13.2	25.0	40	76
	250V DC	[A]	8.5	8.5	12.2	38	89
	125V DC	[Hp]	1	1.5	3	5	10
	250V DC	[Hp]	2	3	5	10	25

Table 5 - Main Circuits

300, 305, 300S			NEMA Size				
			00	0	1	2	3
Wye-Delta (60 Hz)							
Rated Operational Power, P_e	200V	[Hp]	3	5	10	15	40
	230V	[Hp]	3	5	10	25	50
	460V	[Hp]	7.5	10	25	50	100
	575V	[Hp]	10	15	30	60	125
Star-Delta Starting (50 Hz)							
Rated Operational Current, I_e	≥230V	[A]	9	12	26	40	80
	≥ 240V	[A]	9	12	26	40	80
	400V	[A]	9	12	26	40	80
	415V	[A]	9	12	26	40	80
	500V	[A]	9.5	12.5	23	40	65
	690V	[A]	7	9	17	25	49
	1000V	[A]	–	–	–	–	25
Rated Operational Power, P_e	230V	[kW]	4	5.5	11	18.5	37
	240V	[kW]	4	5.5	11	18.5	37
	400V	[kW]	7.5	7.5	22	37	75
	415V	[kW]	7.5	7.5	22	37	75
	500V	[kW]	7.5	11	22	45	75
	690V	[kW]	7.5	11	22	37	75
	1000V	[kW]	–	–	–	–	–

Table 6 - Main Circuits

300, 305, 300S			NEMA Size				
			00	0	1	2	3
UL/CSA Elevator Duty							
Rated Operational Current and Power, 500,000 electrical operations, 1-Phase	115V AC	[A]	5.8	7.20	20	34	56
	230V AC	[A]	2.20	3.20	9.6	15.2	28
	115V AC	[Hp]	0.25	0.33	1.5	3	5
	230V AC	[Hp]	0.50	0.75	3	5	10
Rated Operational Current and Power, 500,000 electrical operations 3-Phase	200V AC	[A]	4.60	7.50	16.7	30.8	46.2
	230V AC	[A]	4.20	6.80	15.2	28	42
	460V AC	[A]	4.80	7.60	21.0	34	52
	575V AC	[A]	3.90	6.10	17	32	52
	200V AC	[Hp]	1	2	5	10	15
	230V AC	[Hp]	1	2	5	10	20
	460V AC	[Hp]	3	5	15	25	40
	575V AC	[Hp]	3	5	15	30	50
UL/CSA HVAC Applications Definite purpose rating (3-phase)							
FLA	600V	[A]	20	25	45	60	105
LRA	200-208V AC	[A]	120	150	270	360	630
	220-240V AC	[A]	120	150	270	360	630
	440-480V AC	[A]	120	150	270	360	630
	550-600V AC	[A]	80	100	180	240	420

Table 7 - Main Circuits

300, 305, 300S			NEMA Size				
			00	0	1	2	3
Switching of Power Transformers, AC-6a (50 Hz) $\frac{\text{Inrush Current}}{\text{Rated transformer current}} = n$							
n=30	230V	[A]	11.7	13.3	26.7	41.7	63.3
	240V	[A]	11.7	13.3	26.7	41.7	63.3
	400V	[A]	11.7	13.3	26.7	41.7	63.3
	415V	[A]	11.7	13.3	26.7	41.7	63.3
	500V	[A]	11.7	13.3	26.7	41.7	63.3
	690V	[A]	11.7	13.3	26.7	41.7	63.3
Apparent Power	230V	[kVA]	5	5	11	17	25
	240V	[kVA]	5	6	11	17	26
	400V	[kVA]	8	9	18	29	44
	415V	[kVA]	8	10	19	30	45
	500V	[kVA]	10	12	23	36	55
	690V	[kVA]	14	16	32	50	76
n=20	690V	[A]	17.5	20	40	62.5	95
n=15	690V	[A]	23.3	26.7	53.3	83.3	127
60 Hz Peak Inrush/peak rated transformer current							
n=30	600V	[A]	11.7	13.3	26.7	41.7	63.3
Apparent Power	200V	[kVA]	4	5	9	14	22
	208V	[kVA]	4	5	10	15	23
	240V	[kVA]	5	6	11	17	26
	480V	[kVA]	10	11	22	35	53
	600V	[kVA]	12	14	28	43	66
n=20	600V	[A]	17.5	20.0	40.0	62.5	95.0
Apparent Power	200V	[kVA]	6	7	14	22	33
	208V	[kVA]	6	7	14	22	34
	240V	[kVA]	7	8	17	26	39
	480V	[kVA]	15	17	33	52	79
	600V	[kVA]	18	21	42	65	99
n=15	600V	[A]	23.3	26.7	53.3	83.3	127
Apparent Power	200V	[kVA]	8	9	18	29	44
	208V	[kVA]	8	10	19	30	46
	240V	[kVA]	10	11	22	35	53
	480V	[kVA]	19	22	44	69	105
	600V	[kVA]	24	28	55	87	131
Switching of Lighting Loads (UL/CSA)							
Tungsten lamps	1-phase per pole	347V	[A]	20	25	45	65	105
	3-phase (break all lines)	600V	[A]	20	25	45	65	105
Electrical discharge lamps (ballast)	1-phase per pole	347V	[A]	20	25	45	65	105
	3-phase (break all lines)	600V	[A]	20	25	45	65	105

Table 8 - Main Circuits

300, 305, 300S			NEMA Size					
			00	0	1		2	3
			3- or 4-Pole		3-Pole	4-Pole	3-Pole	3-Pole
Switching of DC Loads—Non-inductive or slightly inductive loads or resistance furnaces DC-1 at 60 °C								
1 pole	≤ 72V	[A]	25	27	45	45	70	125
	110V	[A]	10	15	–	–	–	–
	220V	[A]	–	–	–	–	–	–
2 poles in series	≤ 72V	[A]	25	27	45	45	70	125
	110V	[A]	25	27	45	45	70	125
	220V	[A]	10	15	–	–	–	–
3 poles in series	≤ 72V	[A]	25	27	45	45	70	125
	110V	[A]	25	27	45	45	70	125
	220V	[A]	25	27	45	45	70	125
4 poles in series	≤ 72V	[A]	25	–	–	45	–	–
	110V	[A]	25	–	–	45	–	–
	220V	[A]	25	–	–	45	–	–
	440V	[A]	10	–	–	–	–	–
Shunt-wound Motors—Starting, reverse current breaking, reversing, stepping: DC-3 at 60 °C								
1 pole	≤ 72V	[A]	25	27	45	–	70	125
	110V	[A]	6	7	–	–	–	–
	220V	[A]	–	–	–	–	–	–
2 poles in series	≤ 72V	[A]	25	27	45	–	70	125
	110V	[A]	25	27	45	–	70	125
	220V	[A]	6	7	–	–	–	–
3 poles in series	≤ 72V	[A]	25	27	45	–	70	125
	110V	[A]	25	27	45	–	70	125
	220V	[A]	25	27	45	–	70	125
4 poles in series	≤ 72V	[A]	25	–	–	–	–	–
	110V	[A]	25	–	–	–	–	–
	220V	[A]	25	–	–	–	–	–
	440V	[A]	6	–	–	–	–	–
Series-wound Motors—Starting, reverse current breaking, reversing, stepping: DC-5 at 60 °C								
1 pole	≤ 72V	[A]	9	12	20	–	70	125
	110V	[A]	4	4	–	–	–	–
	220V	[A]	–	–	–	–	–	–
2 poles in series	≤ 72V	[A]	25	27	45	–	70	125
	110V	[A]	10	15	45	–	70	125
	220V	[A]	4	4	–	–	–	–
3 poles in series	≤ 72V	[A]	25	27	45	–	70	125
	110V	[A]	25	27	45	–	70	125
	220V	[A]	9	12	20	–	70	125
4 poles in series	≤ 72V	[A]	25	–	–	–	–	–
	110V	[A]	25	–	–	–	–	–
	220V	[A]	10	–	–	–	–	–
	440V	[A]	4	–	–	–	–	–
Short Time Withstand I_{CW} 40 °C								
3- Pole	1 s	[A]	300	300	700	700	1000	–
	10 s	[A]	150	150	350	350	600	–
	30 s	[A]	80	80	225	225	350	–
	1 min	[A]	60	60	150	150	250	–
	15 min	[A]	35	35	50	50	110	–

Table 8 - Main Circuits (Continued)

300, 305, 300S			NEMA Size					
			00	0	1		2	3
			3- or 4-Pole		3-Pole	4-Pole	3-Pole	3-Pole
Resistance and Power Dissipation								
Main current circuit resistance		[mΩ]	0.41	0.46	0.30	0.29	0.21	–
Power dissipation per pole at I_e AC-1, 400V		[W]	0.8	1	1.8	2.4	7	–
Power dissipation per pole at I_e AC-3, 400V		[W]	0.1	0.2	0.6	0.9	2.7	–
Total Power dissipation at: I_e AC-3, 400V; AC/DC control (120-250V)		[W]	2.3	2.6	3.8	4.7	10.1	–
Maximum Switching Frequency	AC-1	ops/hr	600 cycles/h					–
	AC-3	ops/hr	1200 cycles/h					–
	AC-2, AC-4	ops/hr	300 cycles/h		150 cycles/h			–
Weight: AC/DC (Electronic)		[kg (lbs.)]	0.43 (0.95)	0.43 (0.95)	0.48 (1.06)	0.48 (1.06)	0.98 (2.16)	–

Table 9 - Short-circuit Current Ratings

300, 305, 300S			NEMA Size				
			00	0	1	2	3
Short Circuit Coordination (Max. Fuse or Circuit Breaker Rating) Per IEC 60947-4-1							
DIN FUSES- gG			100 kA Available Fault Current				
	Type "2" (400V)	[A]	32	32	62	100	160
			60 kA Available Fault Current				
	Type "2" (690V)	[A]	6	10	32	40	80
MCCB			70 kA Available Fault Current				
	Type "2" (400V)	[A]	28	28	56	520	880
Short Circuit Current Rating (Max. Fuse or Circuit Breaker Rating) Per UL 60947 and CSA 22.2 No. 14 (contactor and fuses or circuit breaker only)							
UL Class RK5 Fuses			5 kA Available Fault Current				
	Type 1 Combination (600V)	[A]	30	30	60	150	–
UL Class RK5 Fuses			10 kA Available Fault Current				
	Type 1 Combination (600V)	[A]	–	–	–	–	200
UL Class J and CSA HRCI-J Fuses			100 kA Available Fault Current				
	Type 1 Combination (600V)	[A]	30	30	60	150	200
UL Inverse-Time Circuit Breaker			5 kA Available Fault Current				
	Type 1 Combination (480V)	[A]	60	60	100	250	–
			10 kA Available Fault Current				
	Type 1 Combination (480V)	[A]	60	60	–	–	250
			65 kA Available Fault Current				
	Type 1 Combination (480V)	[A]	–	–	100	250	250
			100 kA Available Fault Current				
	Type 1 Combination (480V)	[A]	–	–	–	–	100
			5 kA Available Fault Current				
	Type 1 Combination (600V)	[A]	60	60	–	250	–
			10 kA Available Fault Current				
	Type 1 Combination (600V)	[A]	–	–	–	250	250
			25 kA Available Fault Current				
	Type 1 Combination (600V)	[A]	–	–	100	–	–
			35 kA Available Fault Current				
	Type 1 Combination (600V)	[A]	–	–	–	–	–
			50 kA Available Fault Current				
	Type 1 Combination (600V)	[A]	–	–	–	–	250

Table 10 - Coil Data

300, 305, 300S			NEMA Size				
			00	0	1	2	3
Operating Limits							
50/60Hz	pick-up	[x U_S]	0.85...1.1				
	dropout	[x U_S]	≤ 0.60				
DC Control	pick-up	[x U_S]	0.80...1.1				
	dropout	[x U_S]	≤ 0.60				
Standard Coil							
24-60V AC, 20-60V DC (J)	pick-up	[VA]/[W]	50/50			25/25	40/40
	hold-in	[VA]/[W]	2.2/2			4/2	4/2
48...130V AC/DC (Y)	pick-up	[VA]/[W]	50/50			25/25	40/40
	hold-in	[VA]/[W]	2.2/2			4/2	4/2
100...250V AC/DC (D)	pick-up	[VA]/[W]	50/50			25/25	40/40
	hold-in	[VA]/[W]	2.2/2			4/2	4/2
250...500V AC/DC (B)	pick-up	[VA]/[W]	50/50			25/25	40/40
	hold-in	[VA]/[W]	2.2/2			4/2	4/2
Operating Times	closing delay	[ms]	40...95			42...100	
	opening delay	[ms]	11...95			17...100	
Energy-efficient Coil							
12-20V DC (EQ)	pick-up	[W]	12...16			–	–
	hold-in	[W]	1.7			–	–
24-60V AC, 20-60V DC (EJ)	pick-up	[VA]/[W]	16/12...16			–	–
	hold-in	[VA]/[W]	1.7/1.7			–	–
Operating Times	closing delay	[ms]	40...95			–	–
	opening delay	[ms]	11...95			–	–
High Energy Efficient Coil							
24V DC (QJ)	pick-up	[W]	6			–	–
	hold-in	[W]	1.7			–	–
Operating Times	closing delay	[ms]	27...53			–	–
	opening delay	[ms]	17...29			–	–

Size 4...8 Devices

Table 11 - Main Circuits

300, 305, 300S			NEMA Size				
			4	5	6	7	8
AC-1 Active Power Load (50/60 Hz); Ambient temperature 40 °C (104 °F)							
Rated Operational Current, I_e	690V	[A]	225	400	700	1050	1650
	1000V	[A]	225	350	700	1050	1650
Rated Operational Power, P_e	230V	[kW]	90	159	279	418	657
	240V	[kW]	94	166	291	436	686
	400V	[kW]	156	277	485	727	1143
	415V	[kW]	162	288	503	755	1186
	500V	[kW]	195	346	606	909	1429
	690V	[kW]	269	478	837	1255	1972
	1000V	[kW]	390	606	1212	1819	2858
Ambient temperature 60 °C (140 °F)							
Rated Operational Current, I_e	690V	[A]	200	350	600	875	1450
	1000V	[A]	200	300	600	875	1450
Rated Operational Power, P_e	230V	[kW]	80	139	239	349	578
	240V	[kW]	83	145	249	364	603
	400V	[kW]	139	242	416	606	1005
	415V	[kW]	144	252	431	629	1042
	500V	[kW]	173	303	520	758	1256
	690V	[kW]	239	418	717	1046	1733
	1000V	[kW]	346	520	1039	1516	2511
Ambient temperature 70 °C (158 °F)							
Rated Operational Current, I_e	690V	[A]	175	290	480	720	1270
	1000V	[A]	175	240	480	720	1270
Rated Operational Power, P_e	230V	[kW]	70	116	191	287	506
	240V	[kW]	73	121	200	299	528
	400V	[kW]	121	201	333	499	880
	415V	[kW]	126	208	345	518	913
	500V	[kW]	152	251	416	624	1100
	690V	[kW]	209	347	574	860	1518
	1000V	[kW]	303	416	831	1247	2200
With conductor sizes		[mm^2]	95	240	2x240	800 (1)	1500 (2)

(1) Maximum connection bar width 50 mm.
(2) Maximum connection bar width 100 mm.

Table 12 - Main Circuits

300, 305, 300S			NEMA Size				
			4	5	6	7	8
Switching of 3-phase Motors; (50 Hz) Ambient temperature 60 °C (140 °F) AC-2, AC-3							
Rated Operational Current, I_e	220-240V	[A]	146	265	460	750	1060
	380-400V	[A]	146	265	460	750	1060
	415V	[A]	146	265	460	750	1060
	440V	[A]	146	265	460	750	1060
	500V	[A]	130	250	460	750	970
	690V	[A]	93	250	400	650	970
	1000V	[A]	60	113	200	300	400
Rated Operational Power, P_e	220-240V	[kW]	45	75	132	220	315
	380-400V	[kW]	75	132	250	400	560
	415V	[kW]	75	132	250	425	630
	440V	[kW]	90	160	250	450	710
	500V	[kW]	90	160	315	530	710
	690V	[kW]	90	200	355	600	1000
	1000V	[kW]	75	160	280	400	600
Load Carrying Capacity per UL/CSA							
General-purpose Current (enclosed)		[A]	200	350	650	900	1650
Rated Operational Current and Power (enclosed), 3-Phase	200V	[A]	120	221	414	692	1030
	230V	[A]	130	248	480	722	1030
	460V	[A]	124	240	477	722	1030
	575V	[A]	125	242	472	672	1050
	200V	[Hp]	40	75	150	250	—
	230V	[Hp]	50	100	200	300	450
	460V	[Hp]	100	200	400	600	900
	575V	[Hp]	125	250	500	700	1150
Rated Current (enclosed), with 3 poles in series	260V DC	[A]	200	—	—	—	—
	300V DC	[A]	—	—	—	—	—
	340V DC	[A]	—	350	—	—	—
	600V DC	[A]	—	—	650	900	1350

Table 13 - Main Circuits

300, 305, 300S			NEMA Size				
			4	5	6	7	8
Switching of 3-phase Motors, (50Hz); Ambient temperature 60°C, AC-4							
Rated Operational Current, I_e	230V	[A]	103	195	377	–	–
	240V	[A]	103	195	377	–	–
	400V	[A]	103	195	377	–	–
	415V	[A]	103	195	377	–	–
	500V	[A]	103	195	377	–	–
	690V	[A]	80	153	350	–	–
	1000V	[A]	48	90	155	–	–
Rated Operational Power, P_e	230V	[kW]	32	55	110	–	–
	240V	[kW]	32	63	125	–	–
	400V	[kW]	55	110	200	–	–
	415V	[kW]	55	110	220	–	–
	500V	[kW]	63	132	250	–	–
	690V	[kW]	75	150	335	–	–
	1000V	[kW]	63	125	220	–	–
AC-4 at approximately 200,000 operations							
Rated Operational Current, I_e	230V	[A]	38	73	135	–	–
	240V	[A]	38	73	135	–	–
	400/415V	[A]	38	73	135	–	–
	500V	[A]	33	53	89	–	–
	690V	[A]	33	53	89	–	–
	1000V	[A]	–	–	–	–	–
Rated Operational Power, P_e	230V	[kW]	11	22	40	–	–
	240V	[kW]	11	22	45	–	–
	400V	[kW]	20	40	75	–	–
	415V	[kW]	20	40	75	–	–
	500V	[kW]	22	37	63	–	–
	690V	[kW]	30	50	80	–	–
	1000V	[kW]	–	–	–	–	–
Max. switching frequency		Ops/h	150	150	60	–	–
Wye-Delta (60 Hz)							
Rated Operational Power, P_e	200V	[Hp]	60	125	250	–	–
	230V	[Hp]	75	150	350	500	–
	460V	[Hp]	150	350	600	–	–
	575V	[Hp]	200	450	700	–	–

Table 14 - Main Circuits

300, 305, 300S			NEMA Size				
			4	5	6	7	8
UL/CSA Elevator Duty							
Rated Operational Current, I_e	200V	[A]	54	125	–	–	–
	230V	[A]	54	125	–	–	–
	460V	[A]	54	125	–	–	–
	575V	[A]	54	125	–	–	–
Rated Operational Power, P_e	200V	[Hp]	15	40	–	–	–
	230V	[Hp]	20	40	–	–	–
	460V	[Hp]	40	100	–	–	–
	575V	[Hp]	50	125	–	–	–
UL/CSA HVAC Applications Definite purpose rating (3-phase)							
FLA	600V	[A]	160	300	–	–	–
LRA	230V	[A]	960	1800	–	–	–
	460V	[A]	800	1500	–	–	–
	575V	[A]	640	1200	–	–	–
AC resistance heating	600V	[A]	200	400	–	–	–
Star-Delta Starting (50 Hz)							
Rated Operational Current, I_e	≤230V	[A]	252	458	796	1299	1835
	≤ 240V	[A]	252	458	796	1299	1835
	400V	[A]	252	458	796	1299	1835
	415V	[A]	252	458	796	1299	1835
	500V	[A]	225	433	796	1299	1680
	690V	[A]	161	433	692	1125	1680
	1000V	[A]	103	173	346	519	–
Rated Operational Power, P_e	230V (1)	[kW]	75	132	250	400	560
	240V (1)	[kW]	75	132	250	400	630
	400V (1)	[kW]	132	250	400	710	1000
	415V (1)	[kW]	132	250	400	800	1100
	500V (1)	[kW]	160	315	500	800	1300
	690V (1)	[kW]	132	400	710	1100	1700
	1000V (1)	[kW]	132	250	500	710	–

(1) Power ratings at 50 Hz: Preferred values according to IEC 60947-4-1

Table 15 - Main Circuits

300, 305, 300S			NEMA Size				
			4	5	6	7	8
Switching of Power Transformers, AC-6a (50 Hz)							
$\frac{\text{Inrush Current}}{\text{Rated transformer current}} = n$							
n = 30	≥ 230V	[A]	79	143	252	286	524
	≥ 240V	[A]	79	143	252	286	524
	≥ 400V	[A]	79	143	252	286	524
	≥ 415V	[A]	79	143	252	286	524
	≥ 500V	[A]	79	143	252	286	–
	≥ 690V	[A]	79	143	252	286	–
	≥ 1000V	[A]	–	–	–	–	–
Apparent Power	230V	[kVA]	31	57	100	114	209
	240V	[kVA]	33	59	105	119	218
	400V	[kVA]	55	99	175	198	363
	415V	[kVA]	56	102	179	203	372
	500V	[kVA]	68	124	218	248	–
	690V	[kVA]	94	171	301	342	–
	1000V	[kVA]	–	–	–	–	–
n = 20	≥ 690V	[A]	119	215	378	429	–
n = 15	≥ 690V	[A]	158	286	504	572	–
60 Hz Peak Inrush/peak rated transformer current							
n = 30	≥ 660V	[A]	79	143	252	286	524
Apparent Power	200V	[kVA]	27	50	87	99	182
	208V	[kVA]	28	52	91	103	189
	240V	[kVA]	33	59	105	119	218
	480V	[kVA]	66	119	210	238	436
	600V	[kVA]	82	149	262	297	545
	660V	[kVA]	90	163	288	327	599
n = 20	≥ 660V	[A]	119	215	378	429	786
Apparent Power	200V	[kVA]	41	74	131	149	272
	208V	[kVA]	43	77	136	155	283
	240V	[kVA]	49	89	157	178	327
	480V	[kVA]	99	179	314	357	653
	600V	[kVA]	124	223	393	446	817
	660V	[kVA]	136	246	432	490	899
n = 15	≥ 660V	[A]	158	286	504	572	1048
Apparent Power	200V	[kVA]	55	99	175	198	363
	208V	[kVA]	57	103	182	206	378
	240V	[kVA]	66	119	210	238	436
	480V	[kVA]	131	238	419	476	871
	600V	[kVA]	164	297	524	594	1089
	660V	[kVA]	181	327	576	654	1198

Table 16 - Main Circuits

300, 305, 300S			NEMA Size				
			4	5	6	7	8
Switching of 3-phase Capacitors, AC-6b (50 Hz)							
Single capacitor 40 °C	230V	[kVAR]	50	85	140	220	300
	240V	[kVAR]	50	85	140	220	300
	400V	[kVAR]	90	145	240	400	500
	415V	[kVAR]	90	145	240	400	500
	500V	[kVAR]	110	180	325	490	600
	690V	[kVAR]	110	200	325	600	800
	1000V	[kVAR]	100	155	300	450	–
Single capacitor 55 °C	230V	[kVAR]	50	85	140	220	300
	240V	[kVAR]	50	85	140	220	300
	400V	[kVAR]	90	145	240	400	500
	415V	[kVAR]	90	145	240	400	500
	500V	[kVAR]	110	180	325	490	600
	690V	[kVAR]	110	200	325	600	800
	1000V	[kVAR]	100	155	300	450	–
Single capacitor 70 °C	230V	[kVAR]	42	70	120	190	280
	240V	[kVAR]	42	70	120	190	280
	400V	[kVAR]	74	135	225	370	480
	415V	[kVAR]	74	135	225	370	480
	500V	[kVAR]	96	165	300	435	570
	690V	[kVAR]	110	200	325	600	750
	1000V	[kVAR]	95	140	270	400	–
60 Hz Single Capacitor (cULus)							
Single capacitor 40 °C	208V	[kVAR]	41	83	142	214	346
	240V	[kVAR]	48	95	164	247	398
	480V	[kVAR]	100	200	329	494	832
	600V	[kVAR]	125	250	410	618	1040
Switching of Lamps							
Gas discharge lamps AC-5a	open	[A]	146	265	460	750	1072
UL Ballast Ratings		[A]	200	400	–	–	–
Filament AC-5b	230/ 240V	[A]	146	265	460	750	1072

Table 17 - Main Circuits

300, 305, 300S			NEMA Size				
			4	5	6	7	8
Switching of DC Loads—Non-inductive or slightly inductive loads or resistance furnaces DC-1 at 60 °C							
1 pole	≤ 72V	[A]	200	400	700	1050	1650
	90V	[A]	200	400	–	–	–
	100V	[A]	–	400	–	–	–
	110V	[A]	–	400	700	1050	1650
2 poles in series	≤ 72V	[A]	200	400	700	1050	1650
	110V	[A]	200	400	700	1050	1650
	175V	[A]	200	400	700	1050	–
	200V	[A]	–	400	700	1050	–
	220V	[A]	–	400	700	1050	–
3 poles in series	≤ 72V	[A]	200	400	700	1050	1650
	110V	[A]	200	400	700	1050	1650
	175V	[A]	200	400	700	1050	1650
	220V	[A]	200	400	700	1050	1650
	260V	[A]	200	400	700	1050	1650
	300V	[A]	–	400	700	1050	1650
	340V	[A]	–	400	700	1050	1650
	600V	[A]	–	–	700	1050	1650
	850V	[A]	–	–	–	1050	1650
Shunt-wound Motors—Starting, reverse current breaking, reversing, stepping DC-3, 60 °C (L/R ≤2 ms)							
3 poles in series	24V	[A]	160	350	700	1050	–
	48/60V	[A]	160	350	700	1050	–
	110V	[A]	160	350	700	1050	–
	220V	[A]	160	350	700	1050	–
	600V	[A]	–	–	700	1050	–
Series-wound Motors—Starting, reverse current breaking, reversing, stepping DC-5, 60 °C (L/R ≤7.5 ms)							
3 poles in series	24V	[A]	160	350	700	1050	–
	48/60V	[A]	160	350	700	1050	–
	110V	[A]	160	350	700	1050	–
	220V	[A]	160	350	700	1050	–
	600V	[A]	–	–	700	1050	–
Short Time Withstand I_{CW} 40 °C	1 s	[A]	1460	2650	4600	7000	12000
	10 s	[A]	1168	2120	4400	6400	10000
	30 s	[A]	674	1224	3100	4500	7500
	1 min	[A]	477	865	2500	3500	5500
	15 min	[A]	225	400	840	1300	2200
Resistance and Power Dissipation							
Main current circuit resistance		[mΩ]	0.454	0.200	0.086	0.045	0.029
Power dissipation per pole at I_e AC-1, 400V		[W]	23	32	42	50	80
Power dissipation per pole at I_e AC-3/400V		[W]	10	14	21	28	50
Total power dissipation at:							
I_e AC-3, 400V; AC/DC control (120-250V)		[W]	33	46.5	68	89	171
Maximum Switching Frequency	AC-1	ops /hr					
	AC-3	ops /hr					
	AC-2, AC-4	ops /hr					
Weight							
AC/DC (Electronic) with bar connections		[kg (lbs.)]	1.50 (3.3)	4.64 (10.2)	12 (26.4)	15 (33)	35 (77)
with built-in cable clamps		[kg (lbs.)]	1.75 (3.85)	–	–	–	–

Table 18 - Short-circuit Current Ratings

300, 305, 300S			NEMA Size				
			4	5	6	7	8
Short Circuit Coordination (Max. Fuse or Circuit Breaker Rating) Per IEC 60947-4-1							
DIN Fuses - gG			100 kA Available Fault Current				
	Type "2" (400V)	[A]	250	400	630	800	1250
			80 kA Available Fault Current				
	Type "2" (690V)	[A]	200	400	630	800	1600
MCCB			70 kA Available Fault Current				
	Type "2" (400V)	[A]	160	400	630	1000	1600
Short Circuit Current Rating (Max. Fuse or Circuit Breaker Rating) Per UL 60947 and CSA 22.2 No. 14 (contactor and fuses or circuit breaker only)							
UL Class RK5 Fuses			10 kA Available Fault Current				
	Type 1 Combination (600V)	[A]	250	–	–	–	–
UL Class L Fuses			18 kA Available Fault Current				
	Type 1 Combination (600V)	[A]	–	800	–	–	–
			30 kA Available Fault Current				
	Type 1 Combination (600V)	[A]	–	–	1000	–	–
			85 kA Available Fault Current				
	Type 1 Combination (600V)	[A]	–	–	–	–	2000
UL Class J and CSA HRCI-J Fuses			100 kA Available Fault Current				
	Type 1 Combination (600V)	[A]	250	600	600	–	–
	Type 2 Combination (600V)	[A]	200	600	600	–	–
UL Class L Fuses			100 kA Available Fault Current				
	Type 1 Combination (600V)	[A]	–	–	800	1200	–
	Type 2 Combination (600V)	[A]	–	–	–	1200	–
UL Inverse-Time Circuit Breaker			42 kA Available Fault Current				
	Type 1 Combination (480V)	[A]	–	–	–	1200	2000
			65 kA Available Fault Current				
	Type 2 Combination (480V)	[A]	250	800	800	800	–
			84 kA Available Fault Current				
	Type 1 Combination (480V)	[A]	–	–	800	–	–
			89 kA Available Fault Current				
	Type 1 Combination (480V)	[A]	–	–	–	800	–
			100 kA Available Fault Current				
	Type 1 Combination (480V)	[A]	250	800	–	–	–
			25 kA Available Fault Current				
	Type 2 Combination (600V)	[A]	250	–	–	–	–
			35 kA Available Fault Current				
	Type 2 Combination (600V)	[A]	–	800	800	800	–
			42 kA Available Fault Current				
	Type 1 Combination (600V)	[A]	–	800	800	800	–
			50 kA Available Fault Current				
	Type 1 Combination (600V)	[A]	250	–	–	–	–
			65 kA Available Fault Current				
	Type 1 Combination (600V)	[A]	–	400	–	–	–

Table 19 - Coil Data

300, 305, 300S			NEMA Size				
			4	5	6	7	8
Operating Limits							
50/60 Hz	pick-up	[x U_S]	0.85...1.1				
	dropout	[x U_S]	0.55				
DC control	pick-up	[x U_S]	0.80...1.1				
	dropout	[x U_S]	0.55				
24...60V AC (J, EJ)	pick-up	[VA]	225	475	–	–	–
	hold-in	[VA]	5.5	8.5	–	–	–
48...130V AC (Y, EY)	pick-up	[VA]	170	340	1215	1100	–
	hold-in	[VA]	4	17	12	12	–
100...250V AC (D, ED)	pick-up	[VA]	130	385	955	880	2450
	hold-in	[VA]	6	17.5	12	12	48
250...500V AC (B, EN)	pick-up	[VA]	205	420	950	985	–
	hold-in	[VA]	16	21	12	12	–
24...60V DC (J, EJ)	pick-up	[W]	210	400	900	785	–
	hold-in	[W]	2.5	3.5	5	5.5	–
48...130V DC (Y, EY)	pick-up	[W]	130	360	1150	1020	–
	hold-in	[W]	2.5	2.5	5	5	–
100...250V DC (D, ED)	pick-up	[W]	135	410	895	880	2290
	hold-in	[W]	3	4.5	5	5	20.5
250...500V DC (B, EN)	pick-up	[W]	205	600	885	910	–
	hold-in	[W]	4	4.7	7.5	7.5	–
PLC Interface			10 mA @ 24V DC				
Operating Times							
AC or DC	closing delay	[ms]	20...55	30...60	50...120	50...120	50...80
	opening delay	[ms]	40...70	45...80	33...70	33...70	35...55
With PLC Interface	closing delay	[ms]	20...31	25...45	40...60	40...90	40...65
	opening delay	[ms]	24...34	25...45	10...30	10...30	10...30

Conductors

Table 20 - Cross Sections, Screw Type Terminals

300, 305, 300S			NEMA Size				
			00	0	1	2	3
Conductor Cross Sections—Main Contacts Terminal Type					(1)	(2)	(3)
	1 conductor	[mm²]	0.75...6	0.75...6	1.5...10	4...35	6...50
	2 conductors	[mm²]	0.75...6	0.75...6	1.5...10	4...35	6...50
	1 conductor	[mm²]	1...6	1...6	2.5...10	6...35	6...70
	2 conductors	[mm²]	1...6	1...6	2.5...10	6...35	6...50
Recommended torque		[N•m]	1.5	1.5	2.5	4	6
Cross Section per UL/CSA		[AWG]	16...10	16...10	14...8	10...2	6...1
Recommended torque		[lb•in]	13	13	22	35	53
Conductor Cross Sections- Coil and Auxiliary Contact Terminal Type					(1)		
	1 conductor	[mm²]	0.75...2.5	0.75...2.5	0.75...2.5	0.75...2.5	0.75...2.5
	2 conductors	[mm²]	0.75...2.5	0.75...2.5	0.75...2.5	0.75...2.5	0.75...2.5
	1 conductor	[mm²]	1...2.5	1...2.5	1...2.5	1...2.5	1...2.5
	2 conductors	[mm²]	1...2.5	1...2.5	1...2.5	1...2.5	1...2.5
Recommended torque		[N•m]	1.2	1.2	1.2	1.2	1.2
Cross Section per UL/CSA		[AWG]	18...14	18...14	18...14	18...14	18...14
Recommended torque		[lb-in]	11	11	11	11	11

(1) Pozidriv No. 2 / Blade No. 3 screw
(2) Pozidriv No. 2 / Blade No. 4 screw
(3) Hexagonal socket screw

Table 21 - Cross Sections, Screw Type Terminals

300, 305, 300S			NEMA Size				
			4	5	6	7	8
Main Terminals							
Conductor Cross Sections — Main Contacts (Terminal type)			13, 7, Ø 6.5, 3	19.5, 14.3, Ø 10.5, 5	25, 22.5, Ø 10.5, Ø 6.5, 6	40, 22.5, Ø 6.5, Ø 12.5, 6	80, 40, 27, 17, 30, 10, Ø 13, 10
	(1) conductor	[mm²]	10...95	16...185	—	—	—
	Clamp Type		100-ECL146	100-ETL370	—	—	—
Recommended torque		[N•m]	8	42	—	—	—
	(2) conductors	[mm²]	10...95	16...500	70...240	70...240	70...300
	Clamp Type		100-ECL146	100-ETL370B	100-ETL580	100-ETL750	100-ETL1060
Recommended torque		[N•m]	8	42	31	43	57
	(3) conductors	[mm²]	—	—	—	70...500	70...750
	Clamp Type		—	—	—	100-ETL750	100-ETL1060
Recommended torque		[N•m]	—	—	—	43	57
	(4) conductors	[mm²]	—	—	—	—	70...750
	Clamp Type		—	—	—	—	100-ETL1060
Recommended torque		[N•m]	—	—	—	—	57
	(6) conductors	[mm²]	—	—	—	—	70...750
	Clamp Type		—	—	—	—	100-ETL1060B

Table 21 - Cross Sections, Screw Type Terminals (Continued)

300, 305, 300S			NEMA Size				
			4	5	6	7	8
Recommended torque		[N•m]	–	–	–	–	57
	L max.	[mm]	22	32	47	50	
	Ø min.	[mm]	6	10	10	12	
Recommended torque		[N•m]	9	28	35	45	
Cross section per UL/CSA							
	1 conductor	[AWG]	6...3/0	4...400 MCM	–	–	–
	Clamp Type		100-ECL146	100-ETL370	–	–	–
Recommended torque		[lb•in]	80	375	–	–	–
	2 conductors	[AWG]	6...3/0	4...500 MCM	2/0...500 MCM	2/0...500 MCM	1/0...750 MCM
	Clamp Type		100-ECL146	100-ETL370B	100-ETL580	100-ETL750	100-ETL1060
Recommended torque		[lb-in]	80	375	275	375	500
	3 conductors	[AWG]	–	–	–	2/0...500 MCM	1/0...750 MCM
	Clamp Type		–	–	–	100-ETL750	100-ETL1060
Recommended torque		[lb•in]	–	–	–	375	500
	4 conductors	[AWG]	–	–	–	–	1/0...750 MCM
	Clamp Type		–	–	–	–	100-ETL1060
Recommended torque		[lb•in]	–	–	–	–	500
	6 conductors	[AWG]	–	–	–	–	1/0...750 MCM
	Clamp Type		–	–	–	–	100-ETL1060B
Recommended torque		[lb•in]	–	–	–	–	500
	L max.	[in]	0.866	1.26	1.85	1.97	
	Ø min.	[in]	0.236	0.394	0.394	0.472	
Recommended torque		[lb•in]	80	248	310	398	
Conductor Cross Sections – Coil and Auxiliary Contact Terminals (Terminal Type)							
	(1) conductor	[mm^2]	0.75...2.5				
	(2) conductors	[mm^2]	0.75...2.5				
	(1) conductor	[mm^2]	1...4				
	(2) conductors	[mm^2]	1...4				
Recommended torque		[N•m]	1...1.2				
Cross section per UL/CSA		[AWG]	18...14				
Recommended torque		[lb•in]	8.9...10.6				

Auxiliary Contacts

Table 22 - Auxiliary Contacts

			Auxiliary contact for 300, 305, 300S					
			Standard 100-EF/ESA*	Severe Appl. 100-ES*B/B3	Severe Appl. 100-ES*B/B3	Standard 100-ES1/2*	Standard 100-ES3/4*	Low Power 100-ES*-B*
Switching of AC Loads								
Rated Insulation voltage U_i			690V	250V	250V	690V	690V	250V
Rated operational voltage U_e			690V	125V	250V	690V	690V	125V
Rated impulse withstand voltage U_{imp}			6kV	–	–	6kV	6kV	1.5kV
AC-12 I_{th}	at 40 °C	[A]	16	0.1	2	16	16	0.1
	at 60 °C	[A]	–	–	–	–	–	–
AC-14 at rated voltage of	24V	[A]	–	0.1	–	–	–	0.1
	42/48V	[A]	–	0.1	–	–	–	0.1
	120V	[A]	–	0.1	–	–	–	0.1
AC-15 at rated voltage of	24V	[A]	6	–	2	6	6	–
	42/48V	[A]	6	–	2	6	6	–
	120V	[A]	6	–	2	6	6	–
	230V	[A]	4	–	2	4	4	–
	240V	[A]	4	–	2	4	4	–
	400V	[A]	3	–	–	3	3	–
	415V	[A]	3	–	–	3	3	–
	500V	[A]	2	–	–	2	2	–
	690V	[A]	2	–	–	2	2	–
Switching of DC Loads								
DC-12 L/R< 1 ms resistive loads at	24V DC	[A]	–	0.1	2	–	–	0.1
	48V DC	[A]	–	0.1	1	–	–	0.1
	110V DC	[A]	–	0.1	0.2	–	–	0.1
	220V DC	[A]	–	–	0.1	–	–	–
	440V DC	[A]	–	–	–	–	–	–
DC-14 L/R< 15 ms inductive loads with economy resistor in series at	24V DC	[A]	–	–	–	–	–	–
	48V DC	[A]	–	–	–	–	–	–
	110V DC	[A]	–	–	–	–	–	–
	220V DC	[A]	–	–	–	–	–	–
	440V DC	[A]	–	–	–	–	–	–
DC-13 switching electromagnets at	24V DC	[A]	6	–	–	3	6	–
	48V DC	[A]	2.8	–	–	1.5	2.8	–
	110V DC	[A]	0.55	–	–	0.55	0.55	–
	220V DC	[A]	0.27	–	–	0.3	0.3	–
	440V DC	[A]	0.13	–	–	–	–	–
Fuse gG								
Short-circuit protection with no welding of contacts per IEC 60947-5-2		[A]	10	0.1	10	10	10	0.1
		[A]	10	0.1	10	10	10	0.1
Protective Separation per IEC 60947-1, Annex N								
Min. switching capacity at 24V IEC 60947-5-4		[mA]	3	–	–	50	50	–
Min. switching capacity at 3V IEC 60947-5-4		[mA]	–	–	1	–	–	1
Load Carrying Capacity per UL/CSA								
Rated voltage	AC	[V]	600	125	250	600	600	125
Continuous rating	40 °C	[A]	10	0.1	2	10	10	0.1
Switching capacity	AC		A 600	–	–	A 600	A 600	–
Rated voltage	DC	[V]	600	110	220	250	250	125
Continuous rating	40 °C	[A]	2.5	0.1	0.1	2.5	2.5	0.1
Switching capacity	DC		Q 600	–	–	P 600	Q 300	–

Life-Load Curves

3-pole Contactors — Electrical Durability

Figure 1 - Electrical durability for AC-1 utilization category - U_e ≤ 690V

Switching non-inductive or slightly inductive loads. The breaking current I_c for AC-1 is equal to the rated operational current of the load.

Ambient temperature (see page 24) and maximum electrical switching frequency (see page 27).

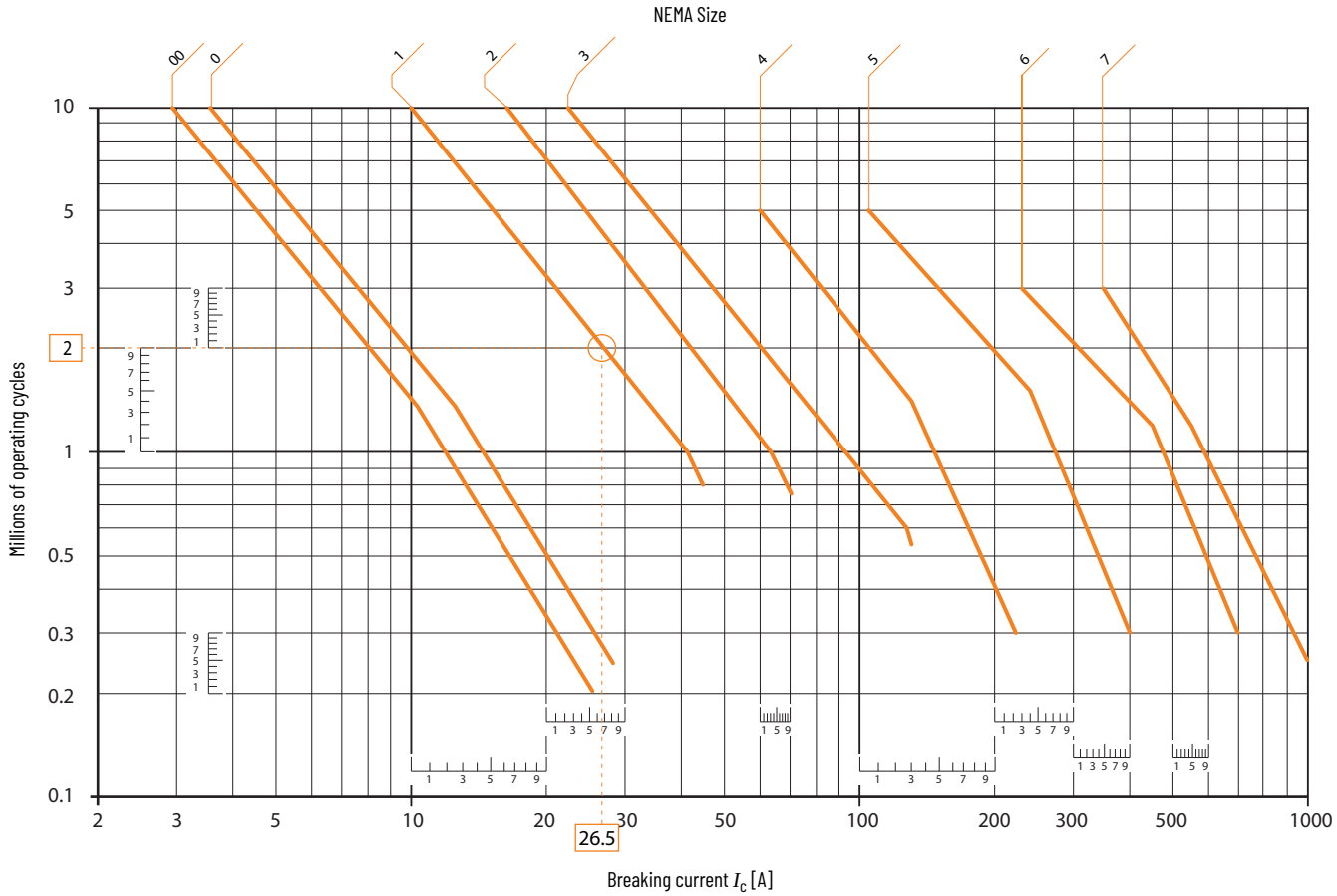

NEMA Size 8: The electrical durability at the rated current is 50,000 operating cycles.

Figure 2 - Electrical durability for AC-3 utilization category - U_e ≤ 440V

Switching cage motors: starting and switching off running motors. The breaking current I_c for AC-3 is equal to the rated operational current I_e (I_e = motor full load current).

For ambient temperature (see page 24) and maximum electrical switching frequency (see page 27).

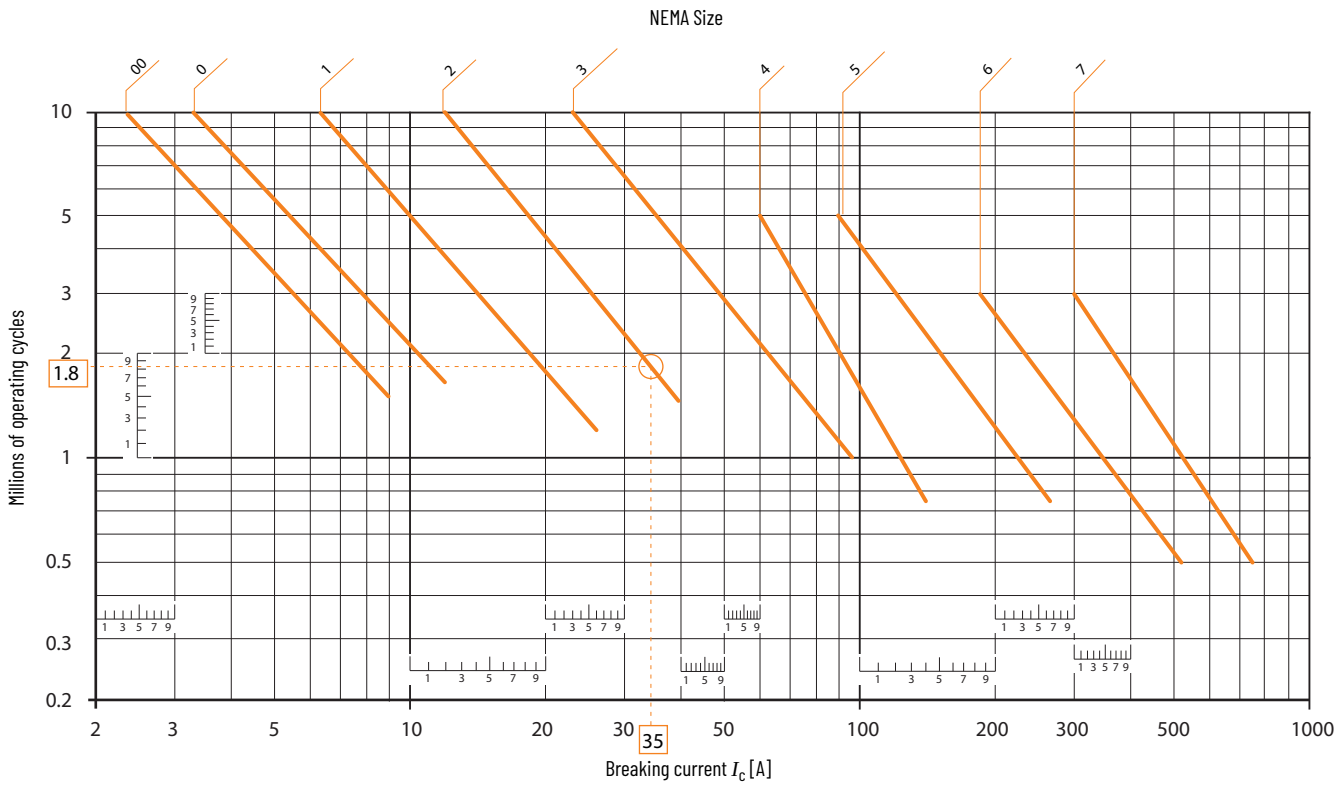

NEMA Size 8: The electrical durability at the rated current is 50,000 operating cycles.

Figure 3 - Electrical durability for AC-3 utilization category - 440V < U_e ≤ 690V

Switching cage motors: starting and switching off running motors. The breaking current I_c for AC-3 is equal to the rated operational current I_e (I_e = motor full load current).

For ambient temperature, see page 24; for maximum electrical switching frequency, see page 27.

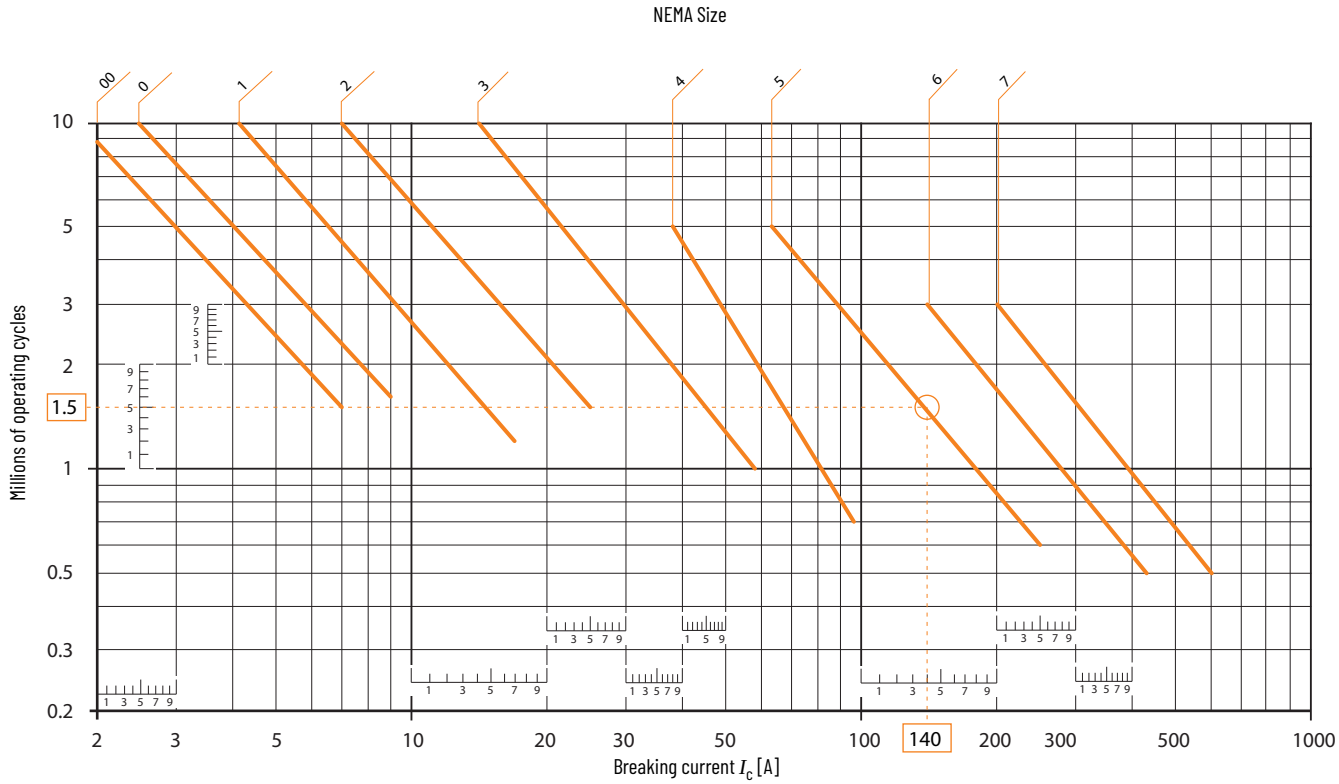

NEMA Size 8: The electrical durability at the rated current is 50,000 operating cycles.

Figure 4 - Electrical durability for AC-2 or AC-4 utilization category - U_e ≤ 440V

Switching cage motors: starting, reverse operation and step-by-step operation. The breaking current I_c is equal to 2.5 x I_e for AC-2 and 6 x I_e for AC-4, keeping in mind that I_e is the motor rated operational current (I_e = motor full-load current). For maximum electrical switching frequency, see page 27.

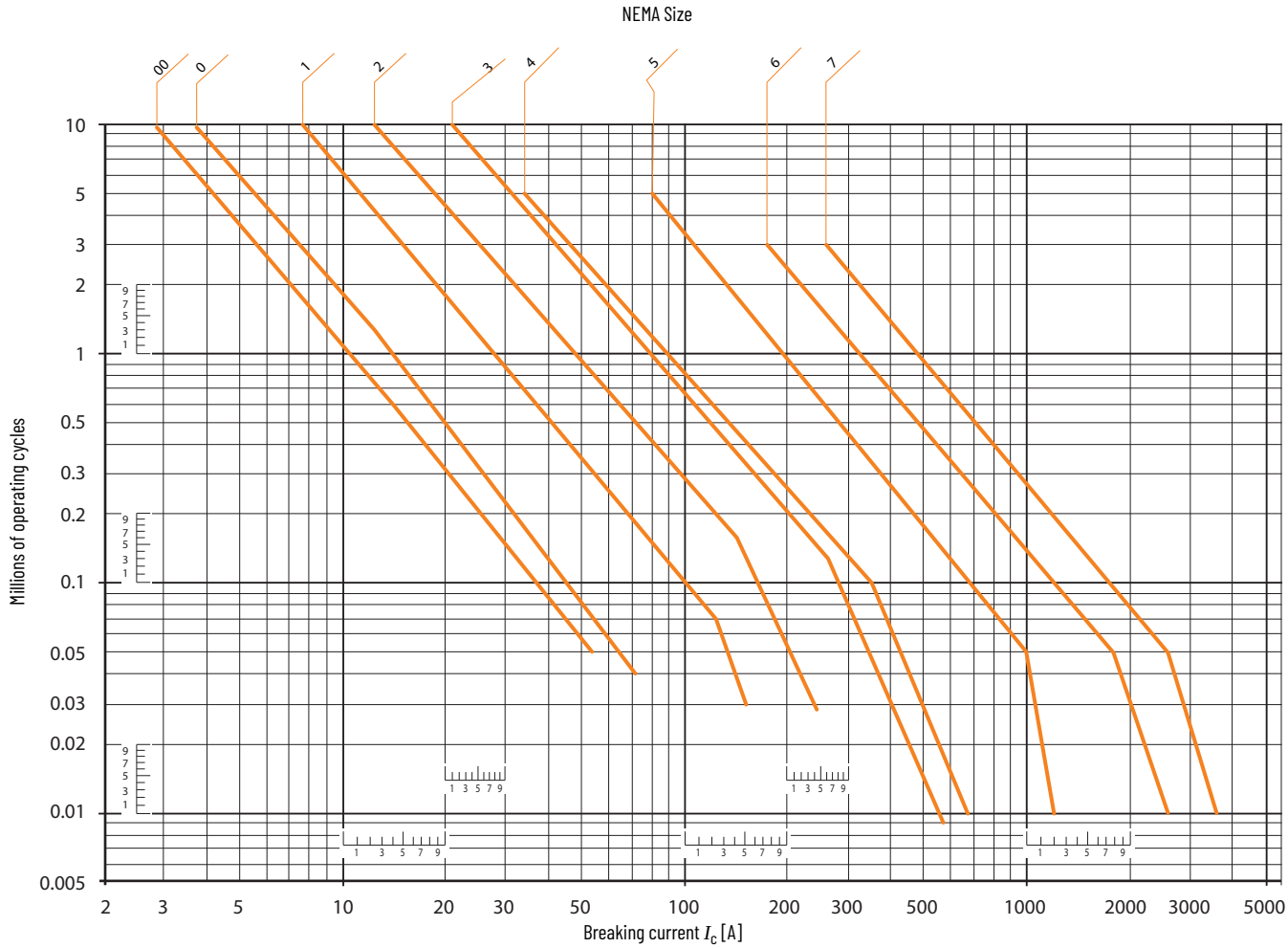

Figure 5 - Electrical durability for AC-2 or AC-4 utilization category - 440V < U_e ≤ 690V

Switching cage motors: starting, reverse operation and step-by-step operation. The breaking current I_c is equal to 2.5 x I_e for AC-2 and 6 x I_e for AC-4, keeping in mind that I_e is the motor rated operational current (I_e = motor full load current). For maximum electrical switching frequency, see page 27.

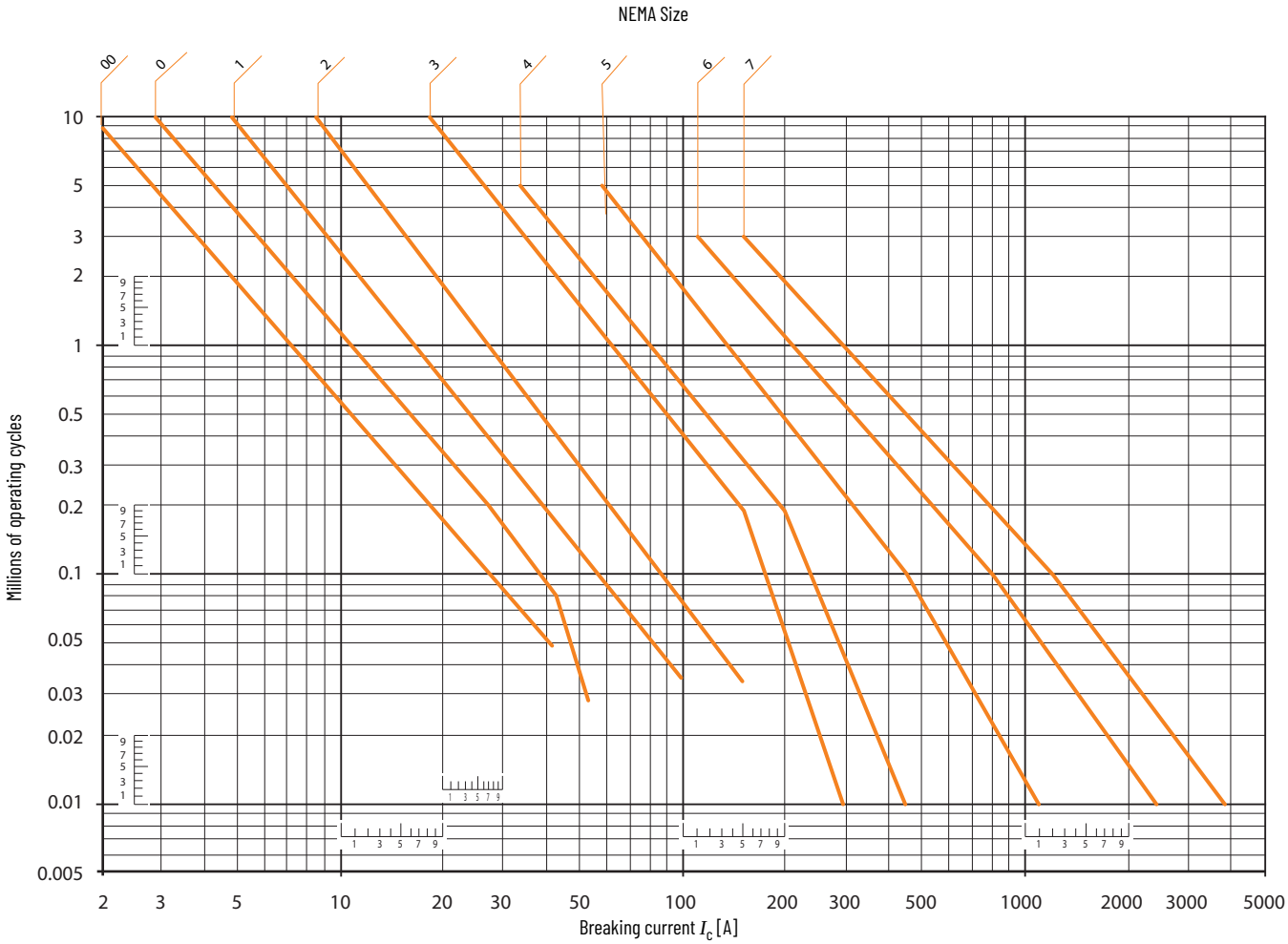

Typical Wiring Diagrams

Figure 6 - Size 00...0 Reversing AC Contactors with Mechanical Interlock, Cat. Nos. 305-T0/A0...-23

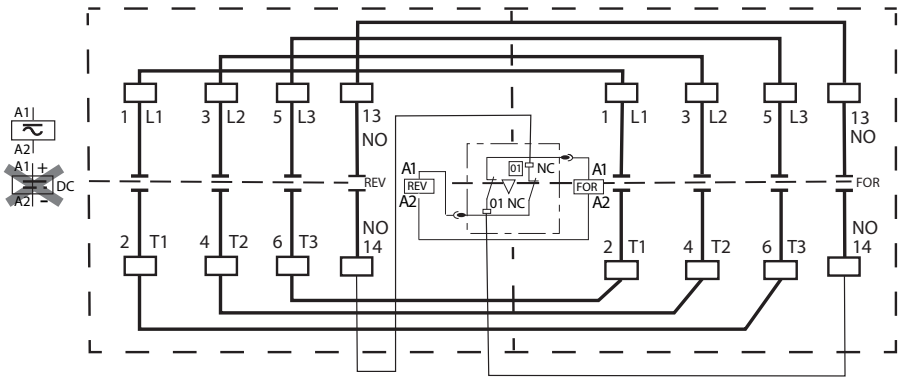

Figure 7 - Size 00...0 Reversing AC/DC Contactors with Mechanical and Electrical Interlock, Cat. Nos. 305-T0/A0...-23Z

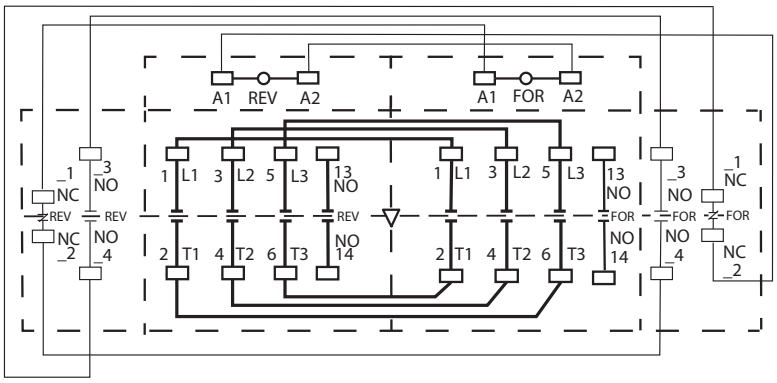

Figure 8 - Size 1 Reversing AC Contactors with Mechanical Interlock, Cat. Nos. 305-B0...-23

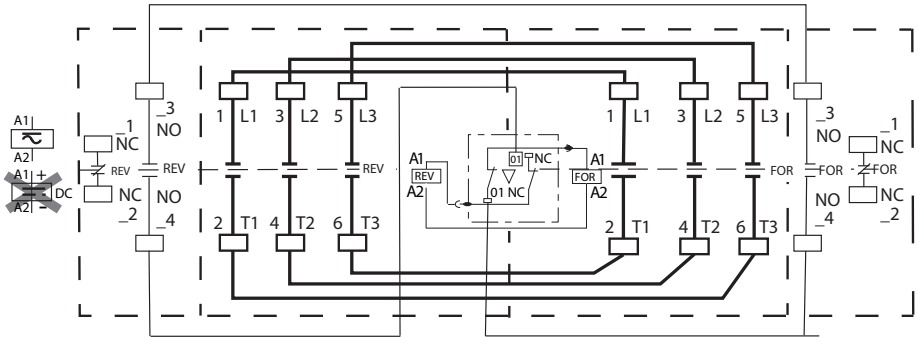

Figure 9 - Size 1 Reversing AC/DC Contactors with Mechanical and Electrical Interlock, Cat. Nos. 305-B0...-23Z

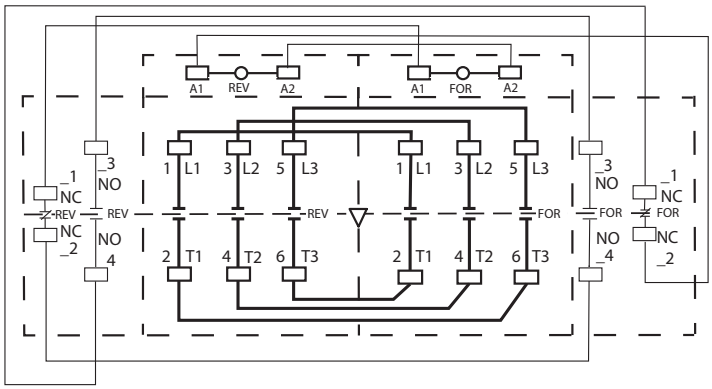

Figure 10 - Size 2...3 Reversing AC Contactors with Mechanical Interlock, Cat. Nos. 305-C0/D0...-23

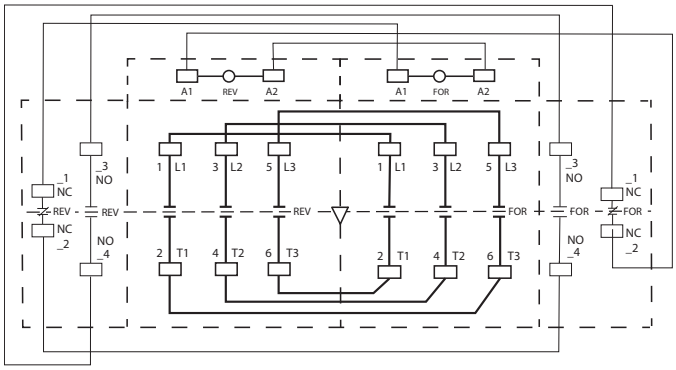

Figure 11 - Size 4...8 Reversing AC Contactors with Mechanical Interlock, Cat. Nos. 305-E0/F0/G0/H0/J0...-23

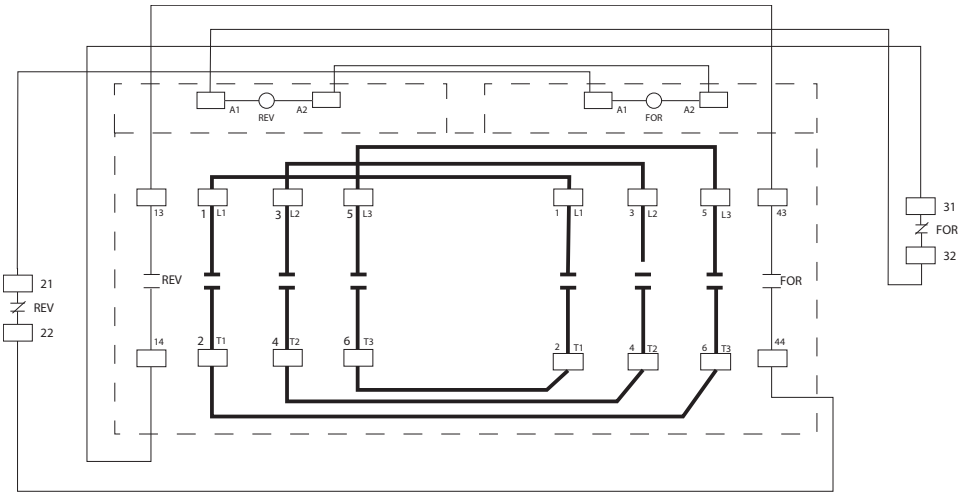

Approximate Dimensions

Dimensions are shown in millimeters (inches). Dimensions are not intended for manufacturing purposes.

Figure 12 - Mounting Position for Size 00...3— AC/DC

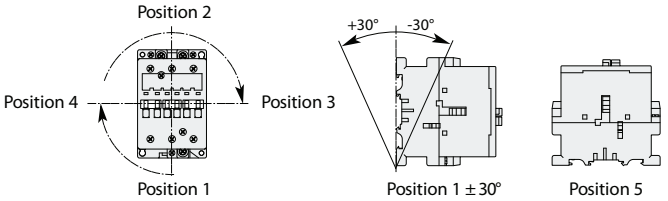

Size 00...0 A Contactors

Figure 13 - 300-T, 300-A 4-Pole Contactors with Standard Coils

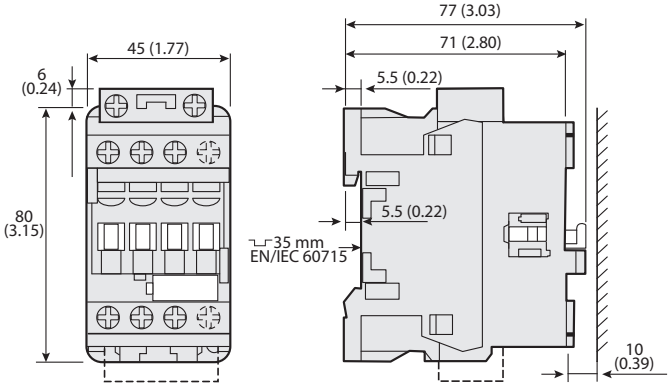

For contactors with QJ coils, add 20 mm (0.79 in.) to the depth

Figure 14 - 300-T, 300-A 4-Pole Contactors with Low-consumption Coils

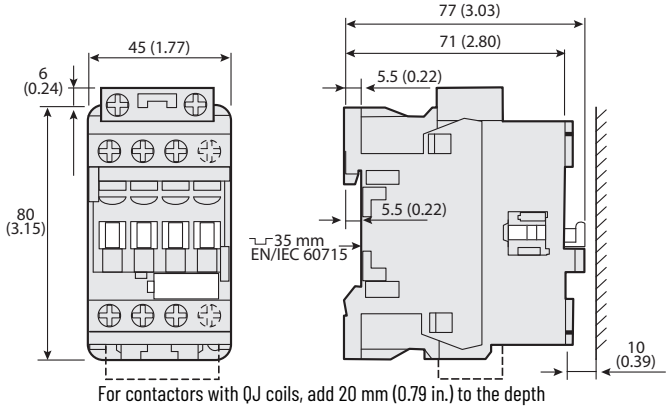

For contactors with QJ coils, add 20 mm (0.79 in.) to the depth

Figure 15 - 300-T, 300-A (3-Pole) Contactors with Standard Coils and Front-mounted Auxiliary Contact

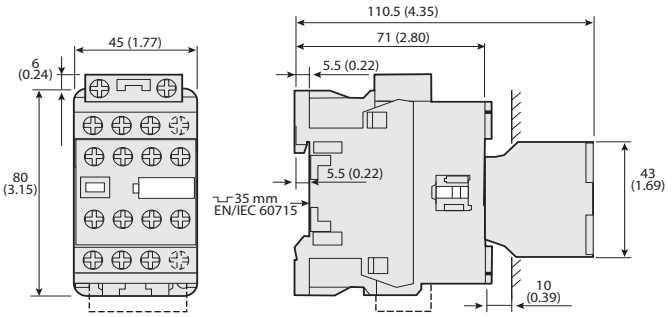

For contactors with QJ coils, add 20 mm (0.79 in.) to the depth

Figure 16 - 300-T, 300-A 3-Pole Contactors with Standard Coils and Side-mounted Auxiliary Contact

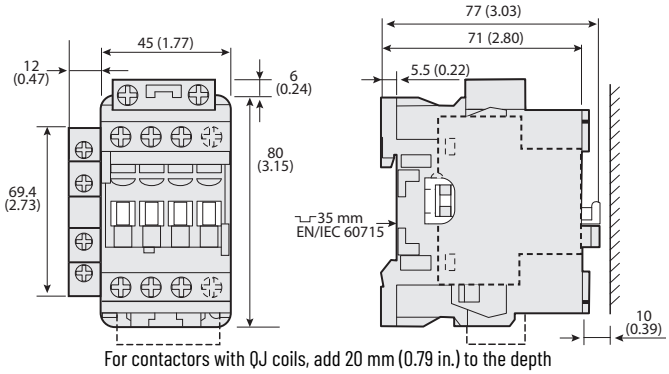

For contactors with QJ coils, add 20 mm (0.79 in.) to the depth

Figure 17 - 300-T, 300-A 3-Pole Contactors with Low-consumption Coils and Front-mounted Auxiliary Contact

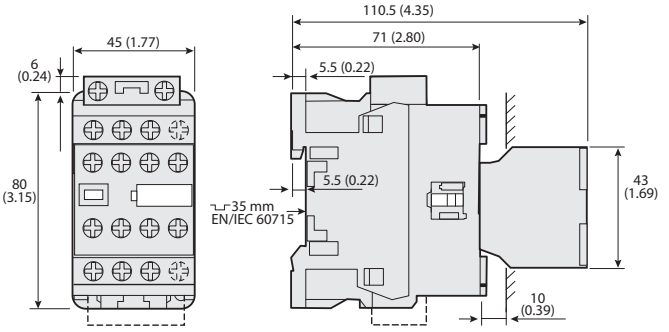

For contactors with QJ coils, add 20 mm (0.79 in.) to the depth

Figure 18 - 300-T, 300-A (3-Pole) Contactors with Low-consumption Coils and Side-mounted Auxiliary Contact

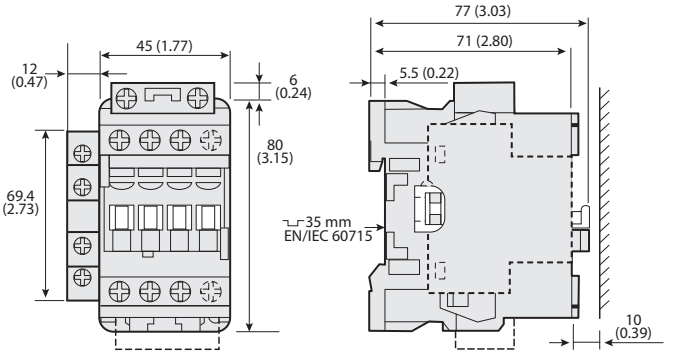

For contactors with QJ coils, add 20 mm (0.79 in.) to the depth

Figure 19 - 305-T, 305-A Reversing Contactors with Cat. No. 100-EMCA02 Mechanical and Electrical Interlock

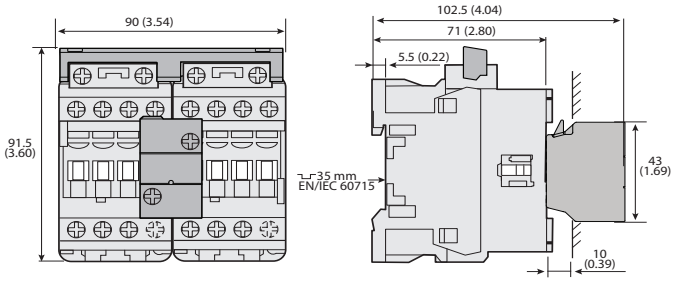

Figure 20 - Drilling Template for 300-T, 300-A Contactors

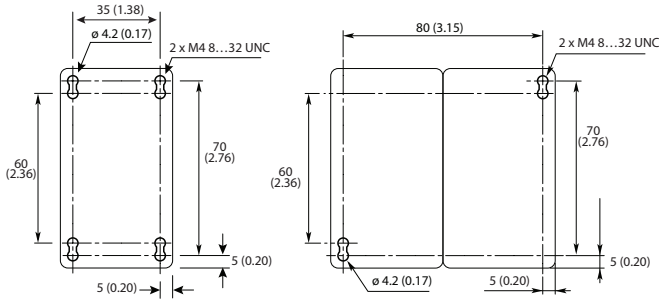

Non reversing contactors Reversing contactors

Size 1 Contactors

Figure 21 - 300-B 3-Pole Contactors with Standard Coils

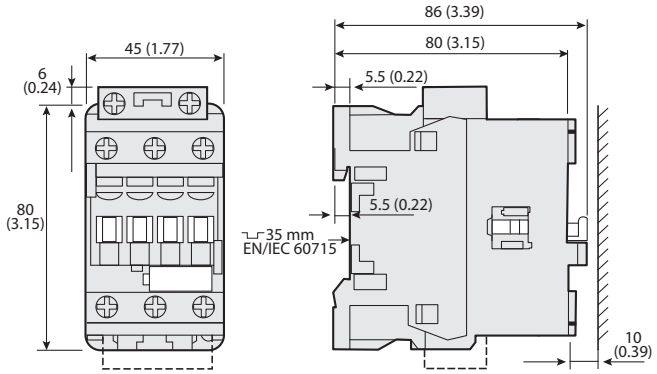

For contactors with QJ coils, add 20 mm (0.79 in.) to the depth

Figure 22 - 300-B 4-Pole Contactors with Standard Coils

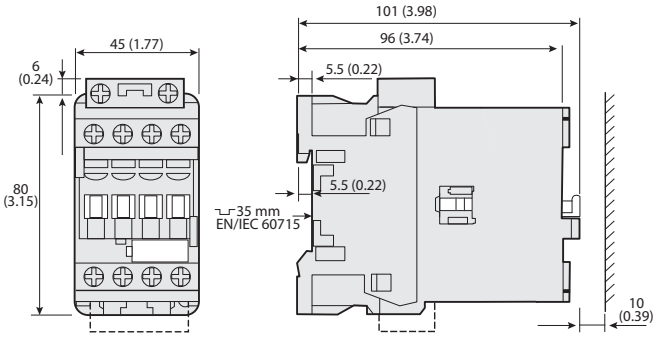

For contactors with QJ coils, add 20 mm (0.79 in.) to the depth

Figure 23 - 300-B 3-Pole Contactors with Low-consumption Coils

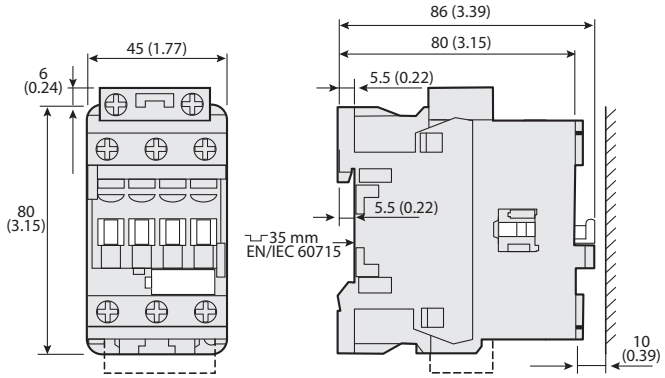

For contactors with QJ coils, add 20 mm (0.79 in.) to the depth

Figure 24 - 300-B 4-Pole Contactors with Low-consumption Coils

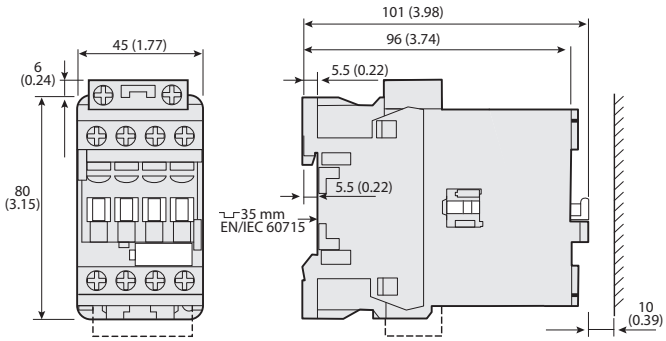

For contactors with QJ coils, add 20 mm (0.79 in.) to the depth

Figure 25 - 300-B 3-Pole Contactors with Standard Coils and Front-mounted Auxiliary Contact

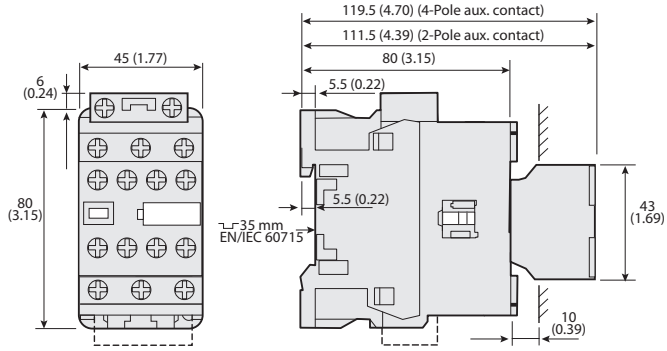

For contactors with QJ coils, add 20 mm (0.79 in.) to the depth

Figure 26 - 300-B 4-Pole Contactors with Standard Coils and Front-mounted Auxiliary Contact

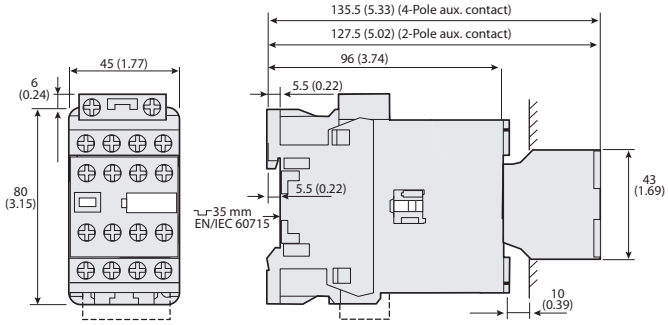

For contactors with QJ coils, add 20 mm (0.79 in.) to the depth

Figure 27 - 300-B 3-Pole Contactors with Standard Coils and Side-mounted Auxiliary Contact

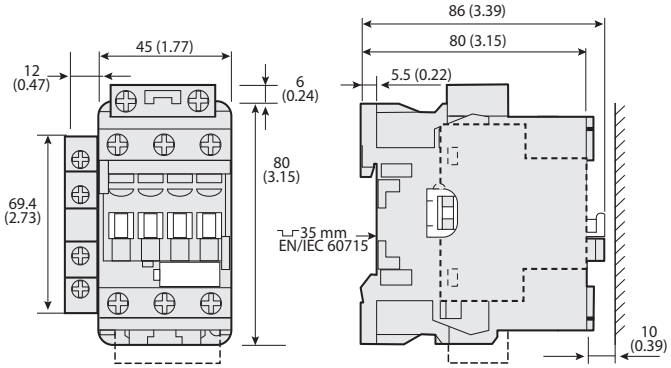

For contactors with QJ coils, add 20 mm (0.79 in.) to the depth

Figure 28 - 300-B 4-Pole Contactors with Standard Coils and Side-mounted Auxiliary Contact

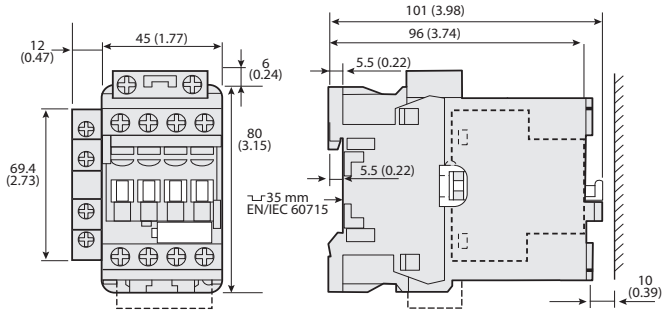

For contactors with QJ coils, add 20 mm (0.79 in.) to the depth

Figure 32 - 300-B 4-Pole Contactors with Low-consumption Coils and Side-mounted Auxiliary Contact

Figure 29 - 300-B 3-Pole Contactors with Low-consumption Coils and Front-mounted Auxiliary Contact

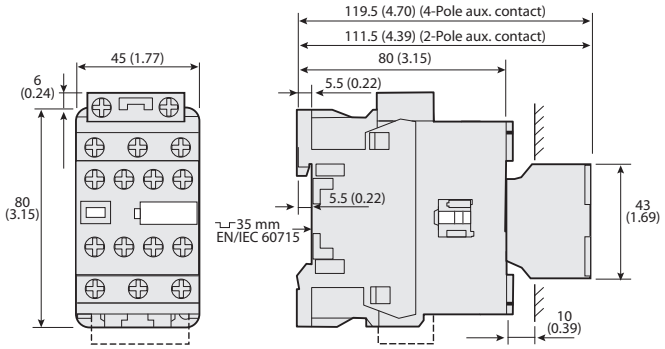

For contactors with QJ coils, add 20 mm (0.79 in.) to the depth

Figure 30 - 300-B 4-Pole Contactors with Low-consumption Coils and Front-mounted Auxiliary Contact

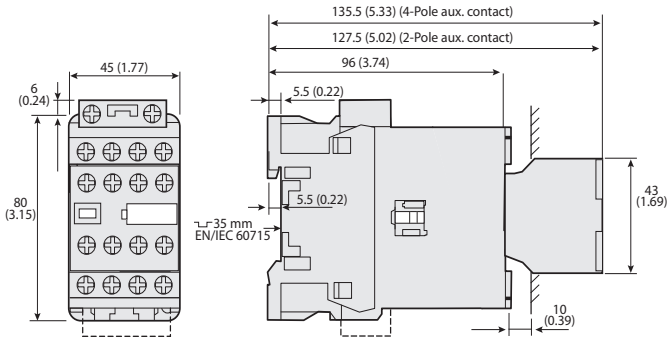

For contactors with QJ coils, add 20 mm (0.79 in.) to the depth

Figure 31 - 300-B 3-Pole Contactors with Low-consumption Coils and Side-mounted Auxiliary Contact

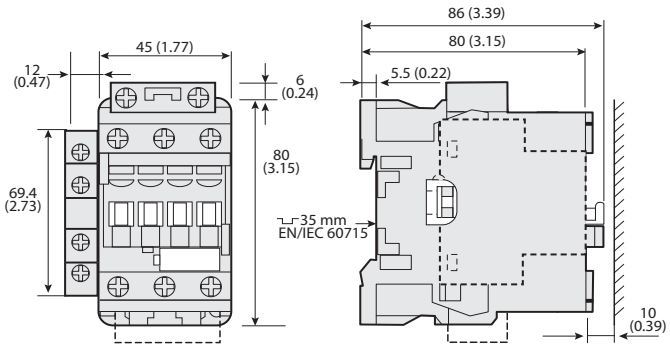

For contactors with QJ coils, add 20 mm (0.79 in.) to the depth

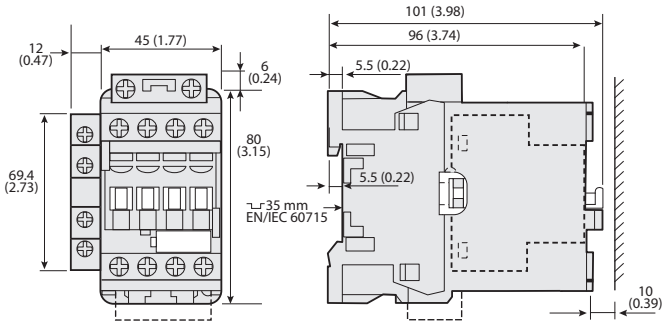

For contactors with QJ coils, add 20 mm (0.79 in.) to the depth

Figure 33 - 305-B Reversing Contactors with Cat. No. 100-EMCA02 Mechanical and Electrical Interlock

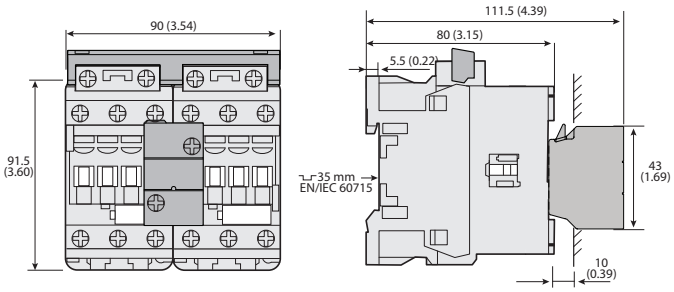

Figure 34 - Drilling Template for Size 1 Contactors

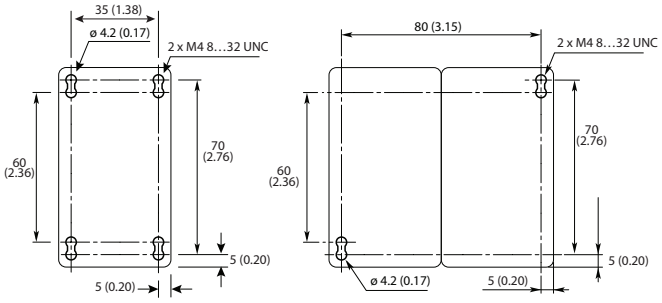

Non reversing contactors Reversing contactors

Size 2 Contactors

Figure 35 - 300-C 3-Pole Contactors

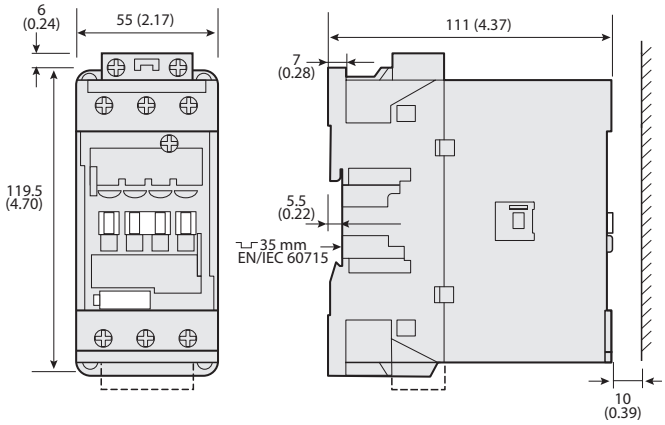

Figure 36 - 300-C 3-Pole Contactors with Front-mounted Auxiliary Contact

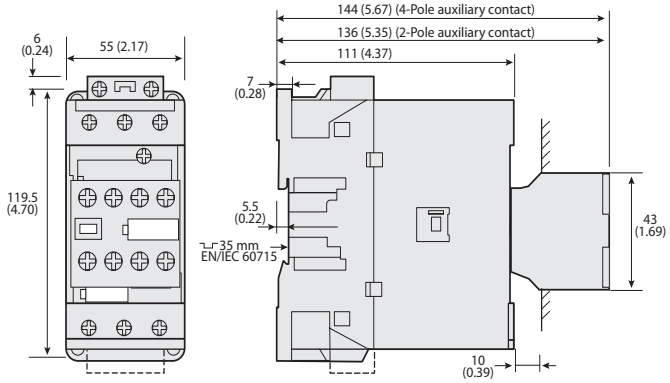

Figure 37 - 300-C 3-Pole Contactors with Side-mounted Auxiliary Contact

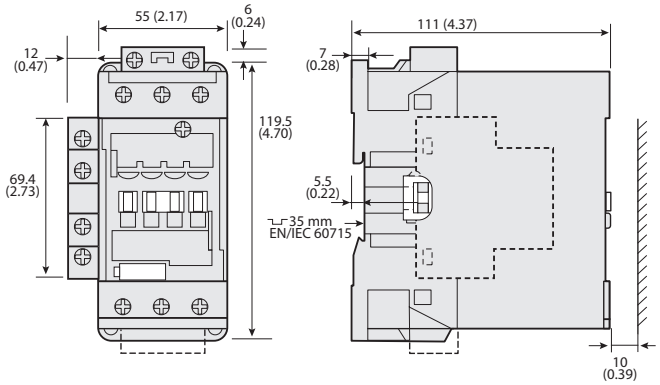

Figure 38 - 300-C Reversing 3-Pole Contactors

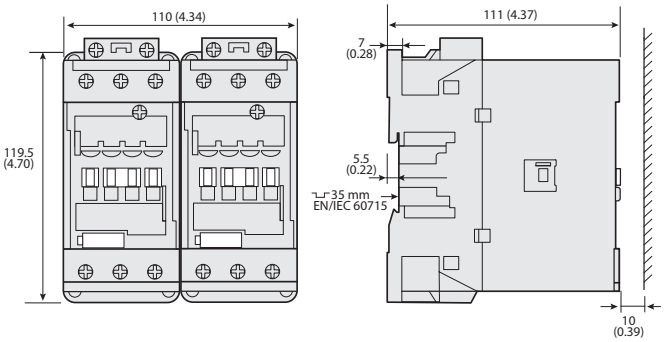

Figure 39 - Drilling Template for 300-C A 3-Pole Contactors

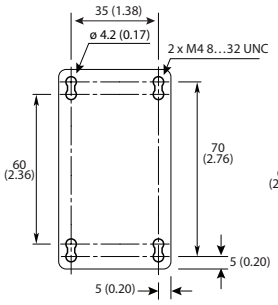

Non reversing contactors

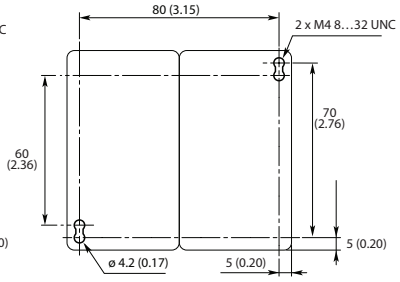

Reversing contactors

Figure 40 - 300-C 4-Pole Contactors

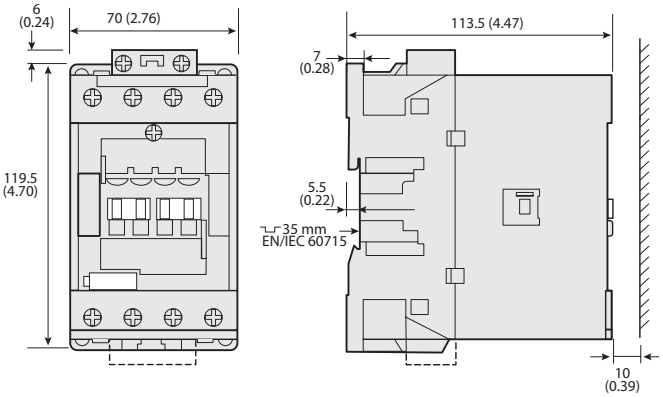

Figure 41 - 300-C 4-Pole Contactors with Front-mounted Auxiliary Contact

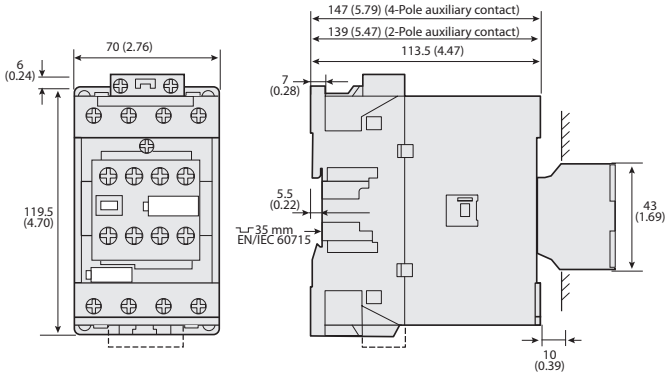

Figure 42 - 300-C 4-Pole Contactors with Side-mounted Auxiliary Contact

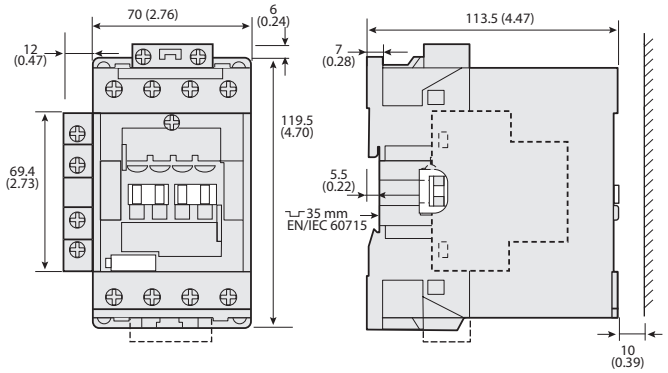

Figure 43 - Drilling Template for 300-C A 4-Pole Contactors

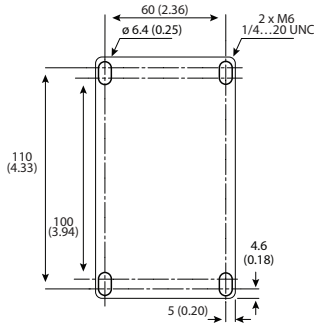

Size 3 Contactors

Figure 44 - 300-D 3-Pole Contactors

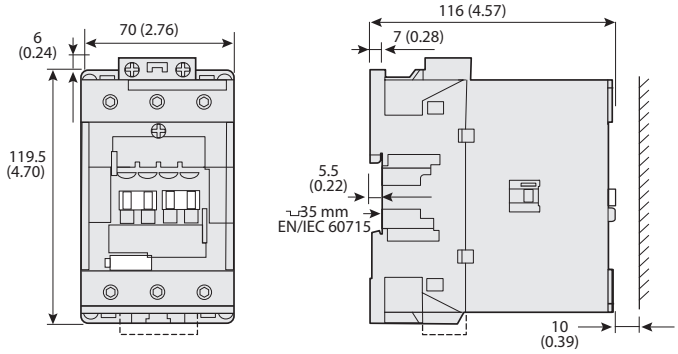

Figure 45 - 300-D 3-Pole Contactors with Front-mounted Auxiliary Contact

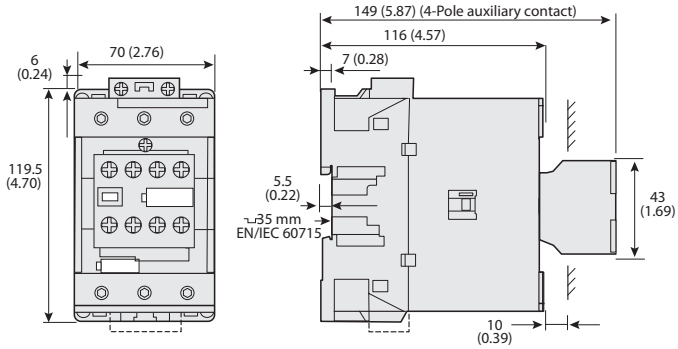

Figure 46 - 300-D 3-Pole Contactors with Side-mounted Auxiliary Contact

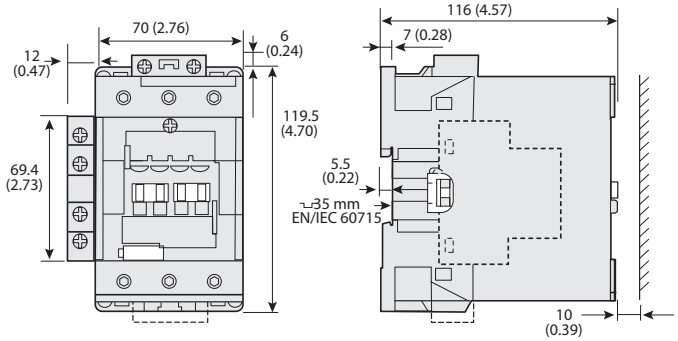

Figure 47 - 300-D Reversing 3-Pole Contactors

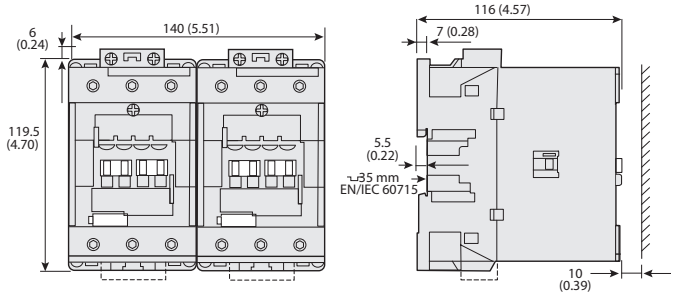

Figure 48 - Drilling Template for 300-D 3-Pole Contactors

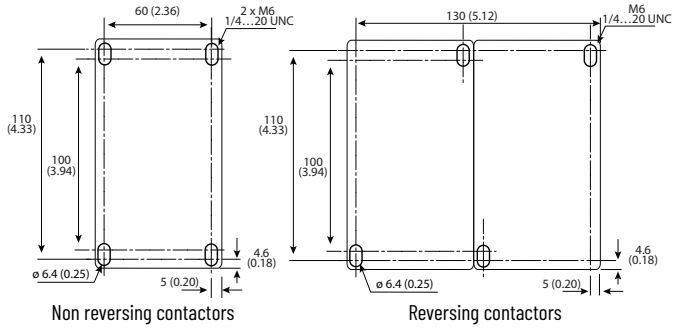

Figure 49 - 300-D 4-Pole Contactors

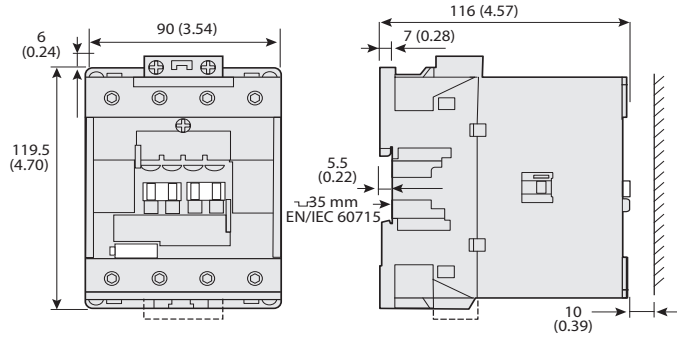

Figure 50 - 300-D 4-Pole Contactors with Front-mounted Auxiliary Contact

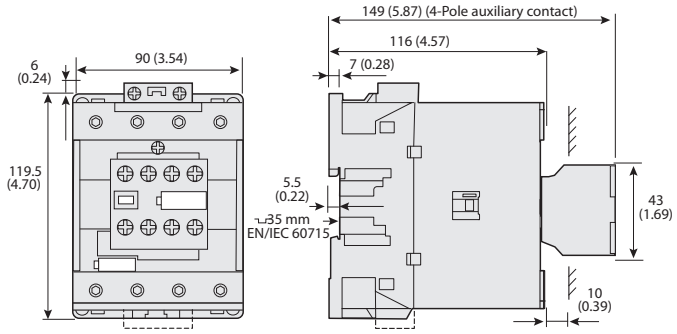

Figure 51 - 300-D 4-Pole Contactors with Side-mounted Auxiliary Contact

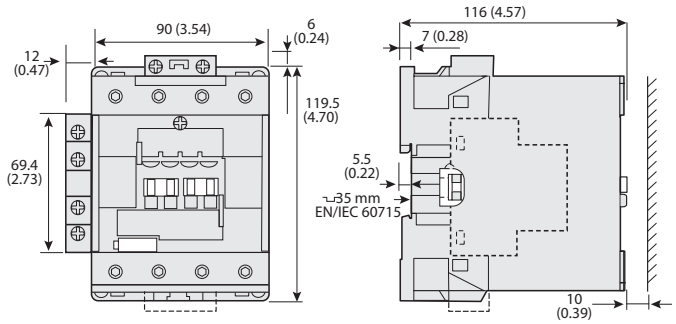

Figure 52 - Drilling Template for 300-D 4-Pole Contactors

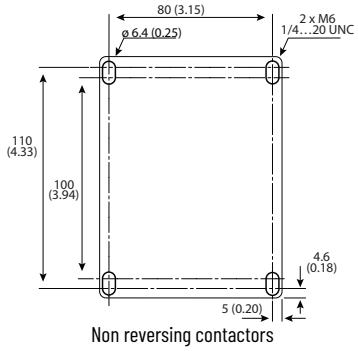

Size 4...8 Contactors

Figure 53 - Mounting Position for 300(S)-E, 300(S)-J Devices—AC/DC and AC/DC with PLC input

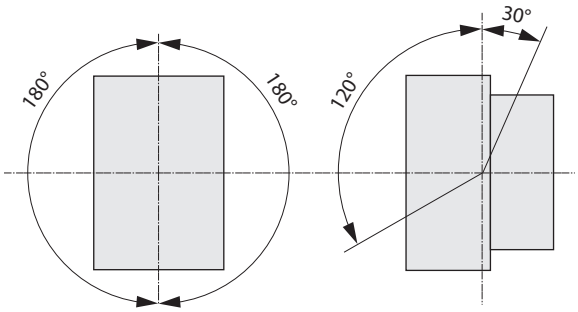

Figure 54 - 300(S)-EO Contactors

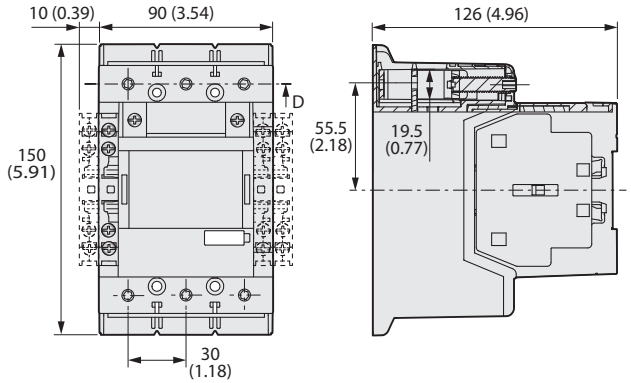

Figure 55 - 300(S)-EOE Contactors with PLC Input

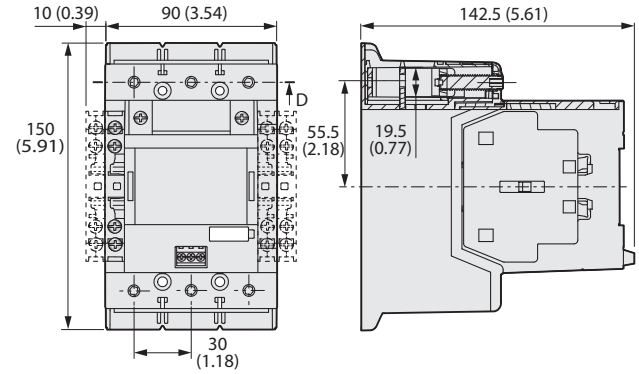

Figure 56 - 305-EO Reversing Contactors with Cat. No. 100-EM... Mechanical Interlock

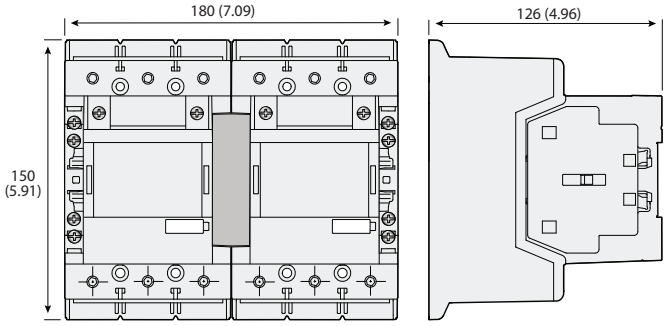

Figure 57 - Drilling Template for Size 4 3-Pole Contactors

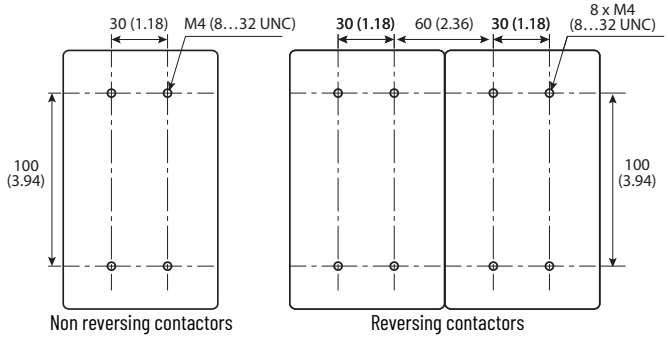

Figure 58 - 300(S)-FO Contactors

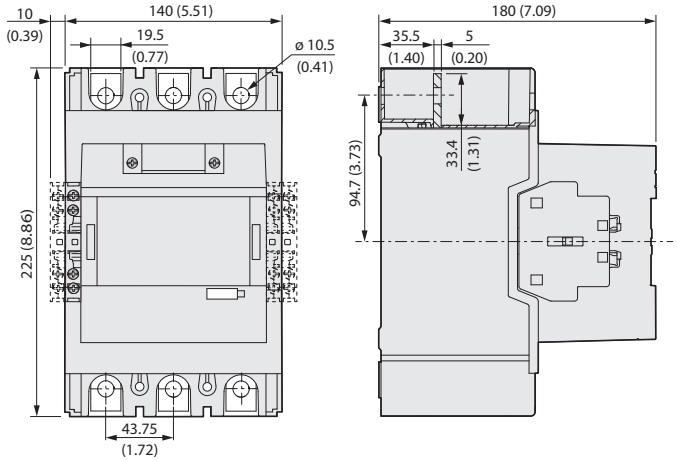

Figure 59 - 300(S)-FOE Contactors with PLC Input

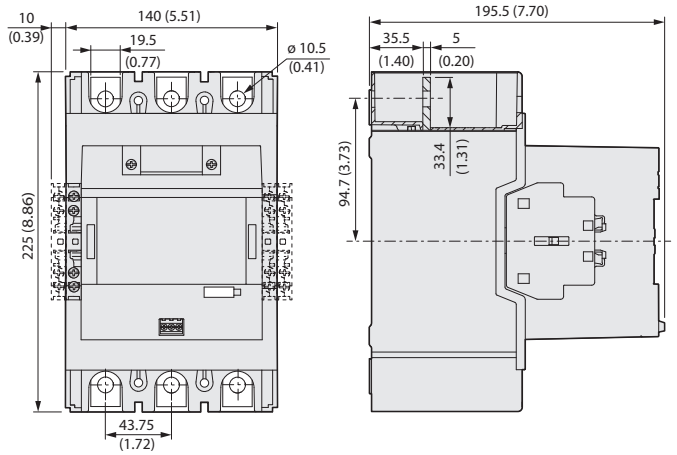

Figure 60 - 305(S)-FO Reversing Contactors with Cat. No. 100-EM... Mechanical Interlock

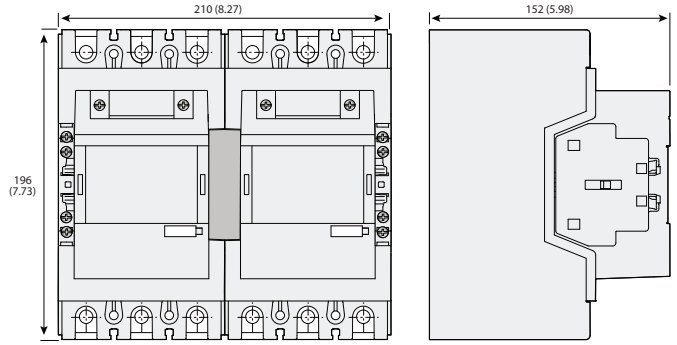

Figure 61 - Drilling Template for Size 5 3-Pole Contactors

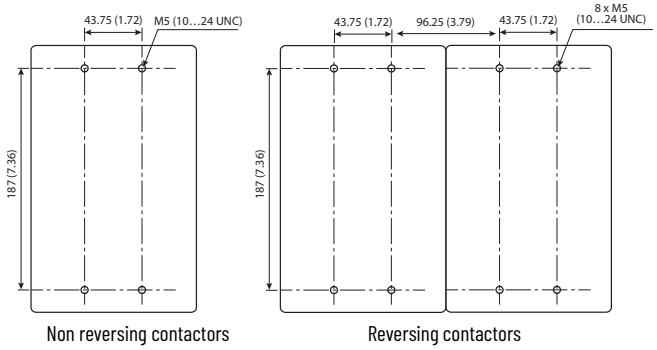

Figure 62 - 300(S)-GO Contactors with PLC Input

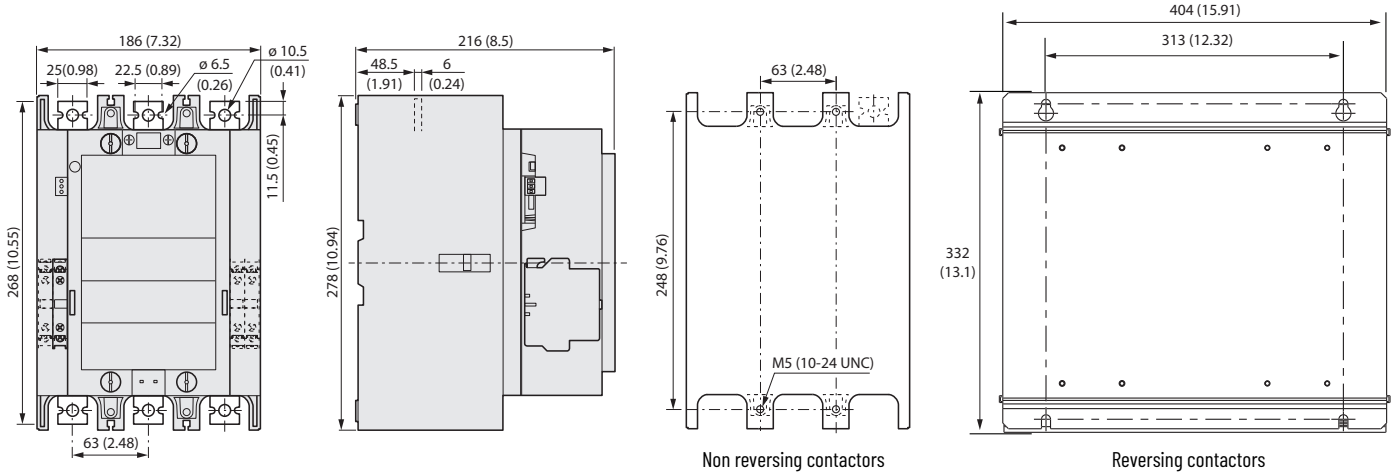

Figure 63 - 300(S)-HO Contactors with PLC Input

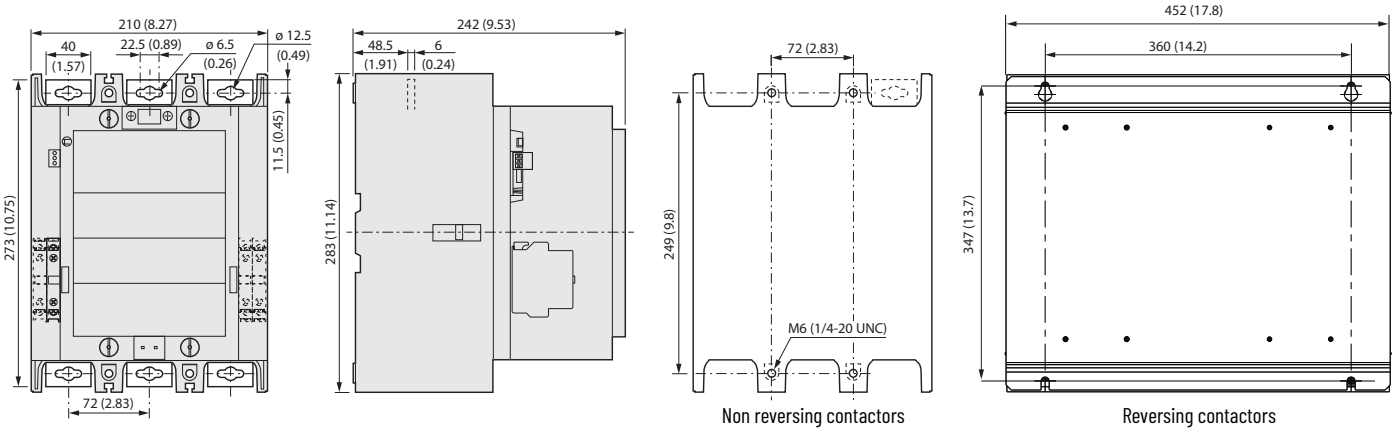

Figure 64 - 300-J0 Contactors with PLC Input

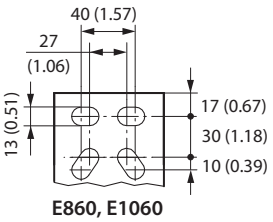

	Dimensions
A	392 (15.43
B	47 (1.85)
C	10 (0.39)

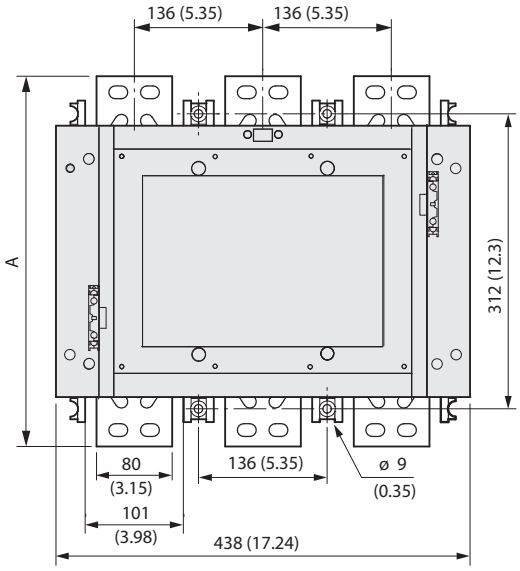

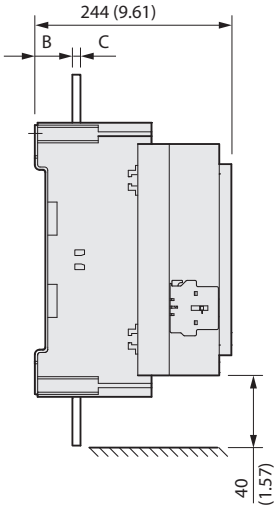

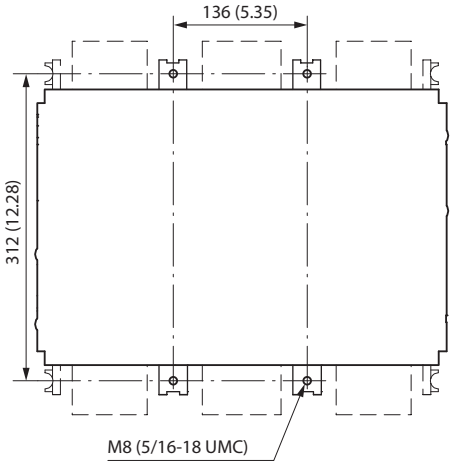

Product Selection

Bulletin 300 Standard Contactors

- NEMA sizes 0...3
- Compact size (space-saving design)
- Guarded terminals
- Panel or DIN Rail mounts available
- Complete range of accessories
- Electronic overload relays
- Electronic and conventional coils

Bulletin 300 modular line of NEMA contactors, when combined with Bulletin 193 solid-state overload relays, auxiliary contacts, interlocks, suppressors, and DIN Rail mounting provides compact and flexible starter component systems.

3-Pole AC- and DC-Operated Contactors

NEMA Size	Continuous Ampere Rating [A]	Max. Horsepower Rating— Full-load Current Must Not Exceed Continuous Ampere Rating [Hp]				Auxiliary Contacts per Contactor		Cat No.
		Motor Voltage				N.O.	N.C.	
		200V	230V	460V	575V			
0	18	3	3	5	5	1	–	300-A0⊗930
1	27	7.5	7.5	10	10	1	–	300-B0⊗930
2	45	10	15	25	25	1	–	300-C0⊗930
3	90	25	30	50	50	1	1	300-D0⊗930

⊗ Coil Voltage Codes (NEMA Sizes 0...3)

The cat. no. as listed is incomplete. Select a coil voltage code from the following table to complete the cat. no.
Example: To select NEMA Size 0, 120V, 60 Hz, **Cat. No. 300-A0⊗930** becomes **Cat. No. 300-A0D930**.

	[V]	24	110	120	220	240	277	440	480	550	600
NEMA Size 0...3	AC, 50 Hz	K	D	P	A	T	–	B	–	C	–
	AC, 60 Hz	J	–	D	–	A	T	–	B	–	C
	AC, 50/60 Hz	KJ	–	–	–	KA	–	–	–	–	–
NEMA Size 0...2	DC	EJ	–	–	–	–	–	–	–	–	–
NEMA Size 3	DC	DJ	–	–	–	–	–	–	–	–	–

Coil Terminal Position

All contactors are delivered with the coil terminals that are located on the line side.

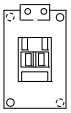

Cat. No. 300-A0⊗930 Line Side

Bulletin 305/309 Factory-assembled Reversing and Non-reversing Starters

Bulletin 305 reversing starters are most commonly used for full-voltage starting and reversing of polyphase squirrel-cage motors. Factory-assembled starter sizes 0...3 are electrically and mechanically interlocked to avoid both contactors being closed simultaneously.

Bulletin 309 starters are designed for full-voltage starting of polyphase squirrel-cage motors. You can operate these starters by remote control with push buttons, float switches, thermostats, pressure switches, snap switches, limit switches, or any other suitable 2- or 3-wire pilot device. Starters are available in factory-assembled sizes 0...3.

3-Pole AC- and DC-Operated Starters

NEMA Size	Continuous Ampere Rating [A]	Max. Horsepower Rating— Full-load Current Must Not Exceed Continuous Ampere Rating [Hp]				Auxiliary Contacts per Contactor		Cat No.	
		Motor Voltage				N.O.	N.C.		
		200V	230V	460V	575V			Bulletin 305 Reversing Starter	Bulletin 309 Non-reversing Starter
0	18	3	3	5	5	1	–	305-A0⊗-✪	309-A0⊗-✪
1	27	7.5	7.5	10	10	1	–	305-B0⊗-✪	309-B0⊗-✪
2	45	10	15	25	25	1	–	305-C0⊗-✪	309-C0⊗-✪
3	40	25	30	50	50	1	1	305-D0⊗-✪	309-D0⊗-✪
4	135	40	50	100	125	1	1	305-E0⊗-✪	309-E0⊗-✪

⊗ Coil Voltage Codes (NEMA Sizes 0...3)

The cat. no. as listed is incomplete. Select a coil voltage code from the following table to complete the cat. no.
Example: To select NEMA Size 0 starter, 120V, 60 Hz, **Cat. No. 309-A0⊗-✪** becomes **Cat. No. 309-A0-✪**.

	[V]	24	110	120	220	240	277	440	480	550	600
NEMA Size 0...3	AC, 50 Hz	–	D	–	A	–	–	B	–	C	–
	AC, 60 Hz	–	–	D	–	A	–	–	B	–	C
	AC, 50/60 Hz	KJ	–	–	–	–	–	–	–	–	–
NEMA Size 0...2	DC	EJ	–	–	–	–	–	–	–	–	–

✪ E1 Plus™ Electronic Overload Relays

Bulletin 193 E1 Plus Electronic Overload Relays are durable, flexible to fit most applications, and easy to install. You can expand communication and protection by using optional side-mounted modules.

- Selectable trip class (10, 15, 20, 30)
- Selectable manual/auto-manual reset
- Screw-type control terminals
- Direct mount

The cat. no. as listed is incomplete. Select an overload relay from the following table to complete the cat. no.
Example: **Cat. No. 309-C0D-✪** becomes **Cat. No. 309-C0D-EEF**. For other voltages, contact your local Rockwell Automation sales office or Allen-Bradley distributor.

NEMA Size	Adjustment Range [A]	Overload Relay Code
0	1.0...5	EEC
0, 1	5.4...27	EEE
2	9...45	EEF
3	18...90	EEG

Bulletin 305/309 User-assembled Reversing and Non-reversing Starters

The following configurations must be user assembled. The configurations require a Bulletin 300 contactor in combination with the specified overload and current transformers for NEMA sizes 4...6.

Bulletin 193 E1 Plus Electronic Overload Relays are accurate and reliable. They are durable, flexible to fit most applications, and easy to install. Through optional side-mount modules, you can expand communication and protection.

- Three-phase devices
- Selectable trip class (10, 15, 20, 30)
- Selectable manual/auto-manual reset
- Screw-type control terminals
- Direct mount

Bul. 305 Reversing Starter

Bul. 309 Non-reversing Starter

User-assembled Starters with E1 Plus Electronic Overload Relays

Mounts to NEMA Contactor Size	Adjustment Range [A]	Overload Relay Cat. No.	Current Transformer Rating [A]	Current Transformer Cat. No.
0	1.0...5.0	193-EECB	–	–
	5.4...27	193-EEEB	–	–
1	5.4...27	193-EEED	–	–
2	9...45	193-EEFD	–	–
3	18...90	193-EEGE	–	–
4	30...150	193-EEHZ	300	193-CT-UL-300A
5	60...300	193-EEKZ	300	193-CT-UL-300A
6	120...600	193-EEMZ	600	193-CT-UL-600A

Bulletin 193 E300™ Electronic Overload Relays offer a flexible design, simplified wiring, and seamless Logix™ integration. Real-time diagnostics are transformed into actionable information which maximizes your up-time and protects your assets.

- Provides critical motor protection functions
- Communication and diagnostics provides detailed logs and control from relay to motor
- Can simplify control architecture

User-assembled Starters with E300 Electronic Overload Relays

Mounts to NEMA Contactor Size	Current Sense [A]	Overload Relay with Sensing Module Cat. No.	Current Transformer Rating [A]	Current Transformer Cat. No.
00	30	193-ESM-⊗-30A-S2	–	–
0	30	193-ESM-⊗-30A-S2	–	–
1	30	193-ESM-⊗-30A-S2	–	–
2	60	193-ESM-⊗-60A-S2	–	–
3	100	193-ESM-⊗-100A-S3	–	–
4	200	193-ESM-⊗-200A	300	193-CT-UL-300A
5	30	193-ESM-⊗-30A-S2	300	193-CT-UL-300A
6	30	193-ESM-⊗-30A-S2	600	193-CT-UL-600A

⊗ Module Type Codes

The overload relay cat. no. as listed is incomplete. Select a module type code from the following table to complete the cat. no. Example: To select NEMA size 2, current sense module, **Cat. No. 193-ESM-⊗-60A-S2** becomes **Cat. No. 193-ESM-I-60A-S2**.

Module Type	Module Type Code
Current Sense Module	I
Current Sense with Ground Fault Module	IG
Voltage and Current Sense with Ground Fault Mode	VIG

User-assembled Overload Current Transformers

Description	Contactor Size	Current Ratio	Accuracy	Burden [VA]	Cat. No.
• Insulation Level: 600 V; BIL 10 kV full wave • Frequency: 50...400 Hz • Rating Factor: 1.33 @30 °C (86 °F) ambient temperature • Plastic Cased • Brass studs – No- 832 UNC with one flat washer, lockwasher and regular nut • UL, cUL Recognized and CSA Certified, as per ANSI/IEE C57.13 IEC, OR relevant standard	4...5	300:5 A	± 1%	8	193-CT-UL-300A
	6	600:5 A	± 1%	30	193-CT-UL-600A

Accessories

Auxiliary Contact Blocks

	Description[1]	Connection Diagrams	N.O.	N.C.	For Use With NEMA Size	Cat. No. Standard Auxiliary Contact	Cat. No. Bifurcated Auxiliary Contact
	Auxiliary Contact Blocks for Front Mounting • 2- and 4-pole • Quick and easy mounting without tools • Electronic-compatible contacts down to 17V, 5mA • Mechanically linked performance between N.O. and N.C. poles and to the main contactor poles (except for L types) • Models with equal function with several terminal numbering choices • 1L = Late break N.C. / early make N.O. • Bifurcated version for switching down to 5V, 3 mA also available	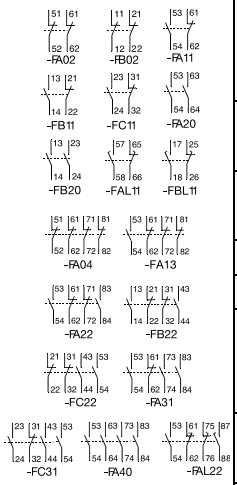	0	2	0...3	100-FA02	100-FAB02
					1...3	100-FB02	100-FBB02
			1	1	0...3	100-FA11	100-FAB11
					1...3	100-FB11	100-FBB11
					0...3	100-FC11	100-FCB11
			2	0	0...3	100-FA20	100-FAB20
					1...3	100-FB20	100-FBB20
			1L	1L	0...3	100-FAL11	–
					1...3	100-FBL11	–
			0	4	0...3	100-FA04	100-FAB04
			1	3	0...3	100-FA13	100-FAB13
			2	2	0...3	100-FA22	100-FAB22
					1...3	100-FB22	100-FBB22
					0...3	100-FC22	100-FCB22
			3	1	0...3	100-FA31	100-FAB31
					0...3	100-FC31	100-FCB31
			4	0	0...3	100-FA40	100-FAB40
			1 + 1L	1+1L	0...3	100-FAL22	–
	Auxiliary Contact Blocks for Side Mounting without Sequence Terminal Designations • 1- and 2-pole • Two-way numbering for right or left mounting on the contactor • Quick and easy mounting without tools • Electronic-compatible contacts down to 17V, 10 mA • Mirror contact performance to the main contactor poles • 1L = Late break N.C. / early make N.O.	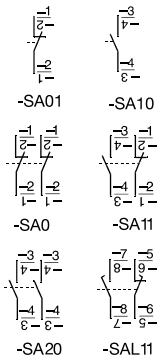	0	1	0...3	100-SA01	–
			1	0	0...3	100-SA10	–
			0	2	0...3	100-SA02	–
			1	1	0...3	100-SA11	–
			2	0	0...3	100-SA20	–
			1L	1L	0...3	100-SAL11	–
	Auxiliary Contact Blocks for Side Mounting with Sequence Terminal Designations • 1- and 2-pole • Two-way numbering for right or left mounting on the contactor • Quick and easy mounting without tools • Electronic-compatible contacts down to 17V, 10 mA • Mirror contact performance to the main contactor poles • 1L = Late break N.C. / early make N.O.	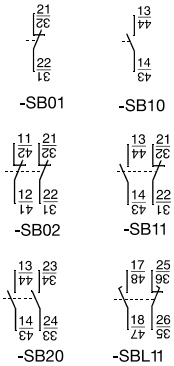	0	1	0...3	100-SB01	–
			1	0	0...3[2]	100-SB10	–
			0	2	0...3[2]	100-SB02	–
			1	1	0...3[2]	100-SB11	–
			2	0	0...3[2]	100-SB20	–
			1L	1L	0...3[2]	100-SBL11	–

(1) Max. number of auxiliary contacts that may be mounted:
AC and 24V DC electronic coil contactors—max. 4 N.O contacts on the front of the contactor, 2 N.O. contacts on the side, 4 N.C. front or side, 6 total. DC Coil contactors—max. 4 N.O. contacts on the front of the contactor or max. 2 N.O. contacts on the side, 4 N.C. front or side, 4 total.
(2) Double numbering—Left-side mounting only is recommended for Cat. No. 300-AO due to double numbering.

Control Modules

Timers

	Description			Connection Diagrams	For Use With NEMA Size	Cat. No.
	Pneumatic Timing Modules • Pneumatic timing element contacts switch after the delay time. The contacts on the main control relay continue to operate without delay	On-Delay	0.3...30 s		0...3 with AC or 24V DC electronic coils	100-FPTA30
			2...180 s			100-FPTA180
		Off-Delay	0.3...30 s		0...3	100-FPTB30
			2...180 s			100-FPTB180
	Electronic Timing Modules — On-delay • Delay of the contactor or control relay solenoid. The contactor or control relay is energized at the end of the delay time.		0.1...3 s	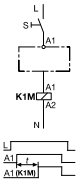	0...3 with 110...240V, 50/60Hz coils	100-ETA3
			1...30 s			100-ETA30
			10...180 s			100-ETA180
			0.1...3 s	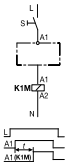	0...3 with 24VDC coils	100-ETAZJ3
			1...30 s			100-ETAZJ30
			10...180 s			100-ETAZJ180
	Electronic Timing Modules — Off-delay • Delay of the contactor or control relay solenoid. After interruption of the control signal, the contactor or control relay is de-energized at the end of the delay time.		0.3...3 s	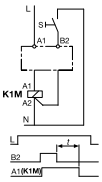	0...1 with 24V 50/ 60Hz coils	100-ETBKJ3
			1...30 s			100-ETBKJ30
			10...180 s			100-ETBKJ180
			0.3...3 s		0...3 with 110...240V 50/60Hz coils	100-ETB3
			1...30 s			100-ETB30
			10...180 s			100-ETB180
	Electronic Timing Modules • Delay of the contactor solenoid. Contactor K 3(Y) is de-energized (off) and K 2 (Δ) is energized (on) after the end of the set Y end time. (Switching delay at 50 ms.) • Continuous adjustment range • High repeat	Transition Time Y Contactor 1...30 s		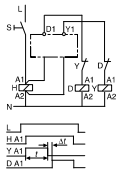	0...3 with 110...240V 50/60Hz coils	100-ETY30
	Mechanical Interlocks • For interlocking of two contactors • Common interlock for most Bul. 300 contactor sizes • Interlocking of different sizes possible • Mechanical and electrical interlocking possible in one module by means of integrated auxiliary contacts • 9 mm dovetail connector included	Mechanical only, without auxiliary contacts			0...3	100-MCA00
		Mechanical/ electrical interlock with 2 N.C. auxiliary contacts			0...3	100-MCA02
	Mechanical Latch • Following contactor latching, the contactor coil is immediately de-energized (off) by the N.C. auxiliary contact (65-66) • Electrical or manual release • 1 N.O. + 1 N.C. auxiliary contacts	Maximum command duration 0.03...10 s		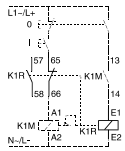	0...3 with AC or 24V DC electronic coils	100-FL11⊗

Coil Voltage Code: The Cat. No. as listed is incomplete. Select a coil voltage code from the table below to complete the Cat. No. Example: 120V, 60 Hz: Cat. No. 100-FL11⊗ becomes Cat. No.100-FL11D

AC Voltages [V][1]	24	48	100	110	120	230...240	240	277	380...400	400...415	440	480
50 Hz	K	Y	KP	D	—	VA	KA	—	N	G	B	—
60 Hz	J	—	—	—	D	—	KA	T	—	—	N	B

(1) For special voltages, consult your local Rockwell Automation sales office or Allen-Bradley distributor.

Additional Control Modules

	Description		Voltage Range	Connection Diagrams	For Use With NEMA Size	Cat. No.
	DC Interface (Electronic) • Interface between the DC control signal (PLC) and the AC operating mechanism of the contactor. • Requires no additional surge suppression on the relay coils.		Input: 12V DC Output: 110...240V AC	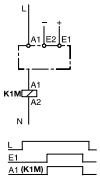	0...3 with AC coils 110...240V AC	100-JE12
			Input: 18...30V DC Output: 110...240V AC			100-JE
			Input: 48V DC Output: 110...240V AC			100-JE48
	Surge Suppressors • For limitation of coil switching transients. • Plug-in, coil mounted. • Suitable for 100-C contactor sizes, 9...97 A. • RC, varistor, and diode versions.	RC Module AC operating mechanism	24...48V AC, 50/60 Hz	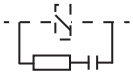	0...3	100-FSC48
			110...280V AC, 50/60 Hz			100-FSC280
			380...480V AC, 50/60 Hz			100-FSC480
		Varistor Module AC/DC operating mechanism	12...55V AC, 12...77V DC	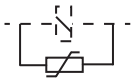	0...3 with AC coils or 0...2 with DC coils	100-FSV55
			56...136V AC/78...180V DC			100-FSV136
			137...277V AC/ 181...350V DC			100-FSV277
			278...575V AC			100-FSV575
		Diode Module DC operating mechanism	1...30 s 10...180 s	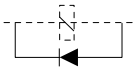	0...2 with DC coils	100-FSD250

Assembly Components (For NEMA Size 0...3 contactors)

	Description		For Use With NEMA Size	Pkg. Qty.	Cat. No.
	Dovetail Connectors • For use in contactor and starter assemblies • Single Connector	0 mm spacing	0...3	10	100-S0
		9 mm spacing		10	100-S9
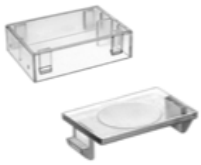	Protective Covers • Provides protection against unintended manual operation • For contactors and front-mounted auxiliary contacts, pneumatic timers, and latches		0...3	1	100-SCCA
			100-FA, -FB, -FC, -FP, -FL	10	100-SCFA
	Reversing Power Wiring Kits • For reversing connection with a solid-state or thermal overload relay		0	1	105-PW23
			1	1	105-PW37
			2	1	105-PW55
			3	1	105-PW85
	DIN (#3) symmetrical hat rail • 35 x 7.5 x 1 m		0...3	10	199-DR1

Marking Systems (For NEMA Size 0...3 contactors)

	Description	Pkg. Qty.[1]	Cat. No.
	Label Sheet • 105 self-adhesive paper labels each, 6 x 17 mm	10	100-FMS
	Marking Tag Sheet • 106 perforated paper labels each, 6 x 17 mm, to be used with a transparent cover	10	100-FMP
	Transparent Cover • To be used with marking tag sheets	100	100-FMC
	Marking Tag Adapters • To be used with 1492W marking tag system	100	100-FMA2

(1) Must be ordered in multiples of package quantities

Terminal Kits (For NEMA Size 0...3 contactors)

	Description	Max. Current Ratings and Wire Sizes		Pkg. Qty(1)	Cat. No.
	Stab Connector Kit • Dual stab (0.250 in.) for 100-C coil terminals • For NEMA Size 0...3 contactors			20	199-SC2
	Stab Connector Kit • Dual stab (0.250 in.) for 100-C power terminals • For NEMA Size 0			100	199-SC10
	3-Pole Terminal Lug Kit • For Cat. No. 300-A0 (Line side)	IEC @ 40 °C IEC @ 40 °C UL/CSA (Encl.)	45 A (4...16 mm^2, fine stranded w/ ferrule)(2) 45 A (4...25 mm^2, coarse stranded/solid) 40 A (#10...4 AWG, stranded/solid)	1	100-CTN23
	3-Pole Terminal Lug Kit • For Cat. No. 300-A0 (Load side)	IEC @ 40 °C IEC @ 40 °C UL/CSA (Encl.)	45 A (4...16 mm^2, fine stranded w/ ferrule) 45 A (4...25 mm^2, coarse stranded/solid) 40 A (#10...4 AWG, stranded/solid)	1	100-CTL23
	3-Pole Terminal Lug Kit • For Cat. No. 300-B0 (Line and load side)	IEC @ 40 °C IEC @ 40 °C UL/CSA (Encl.)	60 A (4...16 mm^2 , fine stranded w/ ferrule) 60 A (4...25 mm^2, coarse stranded/solid) 55 A (#10...4 AWG, stranded/solid)	1	100-CT37
	1-Pole Terminal Lug Kit • For Cat. No. 300-C0	IEC @ 40 °C IEC @ 40 °C UL/CSA (Encl.)	90 A (6...35 mm^2, fine stranded w/ ferrule) 90 A (6...50 mm^2, coarse stranded/solid) 75 A (#8...2 AWG, stranded/solid)	3	100-CT43
	1-Pole Terminal Lug Kit • For Cat. No. 300-D0	IEC @ 40 °C IEC @ 40 °C UL/CSA (Encl.)	130 A (10...70 mm^2, fine stranded w/ ferrule) 130 A (10...95 mm^2, coarse stranded/solid) 130 A (#8...2/0 AWG, stranded/solid)	3	100-CT85
	3-Pole Paralleling Kit • For Cat. No. 300-A0	IEC @ 40 °C IEC @ 40 °C UL/CSA (Encl.)	100 A (35...70 mm^2, fine stranded w/ ferrule) 100 A (35...95 mm^2, coarse stranded/solid) 100 A (#0...2/0 AWG, stranded/solid)	2	100-CP23
	3-Pole Paralleling Kit • For Cat. No. 300-B0	IEC @ 40 °C IEC @ 40 °C UL/CSA (Encl.)	150 A (35...70 mm^2, fine stranded w/ ferrule) 150 A (35...95 mm^2, coarse stranded/solid) 150 A (#0...2/0 AWG, stranded/solid)	2	100-CP37

(1) Must be ordered in multiples of the package quantity.
(2) 16 mm^2 max. according to IEC 60947; actual max. 25 mm^2

SEMI-F47 Voltage Sag Immunity Module

	Description	Input Voltage	For Use With NEMA Size(1)	Options	Cat. No.
	SEMI-F47 Module • Meets SEMI-F47 voltage sag immunity requirements • Direct mounting to coil terminals of 100-C contactors and 700-CF control relays • Requires DC coil contactor • Optional 1...30 s ON-delay timer version	24...240V AC	3	without timer	100-CSF47
		110...240V AC	3	with 1...30 s ON-delay timer	100-CSF47A30

(1) Contactor must have DC coil at the same voltage as AC input. Example: for 24V AC control, select Cat. No. 300-A0ZJ930 (24V DC coil).

Renewal Parts

Replacement Coils for AC Contactors

AC Standard Control Voltages [V]			AC Coil Code	300-A0...	300-B0...	300-C0...	300-D0...
50 Hz	60 Hz	50/60 Hz		Cat. No.	Cat. No.	Cat. No.	Cat. No.
—	12	—	Q	TA006	TC006	TD006	TE006
12	—	—	R	TA404	TC404	TD404	TE404
—	24	—	J	TA013	TC013	TD013	TE013
24	—	—	K	TA407	TC407	TD407	TE407
—	—	24	KJ	TA855	TC855	TD855	TE855
32	36	—	V	TA481	TC481	TD481	TE481
36	42	—	W	TA410	TC410	TD410	TE410
42	48	—	X	TA482	TC482	TD482	TE482
48	—	—	Y	TA414	TC414	TD414	TE414
—	—	48	KY	TA860	TC860	TD860	TE860
100	100...110	100	KP	TA861	TC861	TD861	TE861
110	120	—	D	TA473	TC473	TD473	TE473
—	—	110	KD	TA856	TC856	TD856	TE856
120	—	—	P	TA425	TC425	TD425	TE425
127	—	—	S	TA428	TC428	TD428	TE428
200	200...220	200	KG	TA862	TC862	TD862	TE862
—	208	—	H	TA049	TC049	TD049	TE049
200...220	208...240	—	L	TA296	TC296	TD296	TE296
—	—	200...230	KL	TA864	TC864	TD864	TE864
220	240	—	A	TA474	TC474	TD474	TE474
220...230	260	—	F	TA441	TC441	TD441	TE441
—	—	230	KF	TA851	TC851	TD851	TE851
230...240	—	—	VA	TA440	TC440	TD440	TE440
240	277	—	T	TA480	TC480	TD480	TE480
—	—	240	KA	TA858	TC858	TD858	TE858
—	347	—	I	TA065	TC065	TD065	TE065
—	380	—	E	TA067	TC067	TD067	TE067
380...400	440	—	N	TA071	TC071	TD071	TE071
—	—	400	KN	TA863	TC863	TD863	TE863
400...415	—	—	G	TA457	TC457	TD457	TE457
440	480	—	B	TA475	TC475	TD475	TE475
—	—	440	KB	TA859	TC859	TD859	TE859
500	—	—	M	TA479	TC479	TD479	TE479
550	600	—	C	TA476	TC476	TD476	TE476

Replacement Coils for DC Contactors

DC Control Voltage [V]	DC Coil Code	300-A0...	300-B0...	300-C0... (Series A)	300-C0... (Series B)	300-D0...
		Cat. No.	Cat. No.	Cat. No.	Cat. No.	Cat. No.
9V Diode(1)	DR	–	–	–	–	TE766M
12V Electronic(2)	EQ	TC708E	TC708E	TD708E	TD708E2	–
12V Diode	DQ	–	–	–	–	TE708M
24V Electronic(2)	EJ	TC714E	TC714E	TD714E	TD714E2	–
24V Electronic (3)	QJ	TC714Q	TC714Q	TD714Q	TD714Q2	–
24V Diode(2)	DJ	–	–	–	–	TE714M
36V Diode	DW	–	–	–	–	TE719M
48...72V Electronic	EY	TC724E	TC724E	TD724E	TD724E2	–
48V Diode	DY	–	–	–	–	TE724M
60V Diode	DZ	–	–	–	–	TE774M
64V Diode	DB	–	–	–	–	TE727M
72V Diode	DG	–	–	–	–	TE728M
80V Diode	DE	–	–	–	–	TE729M
110...125V Electronic (4)	ED	TC733E	TC733E	TD733E	TD733E2	–
110V Diode	DD	–	–	–	–	TE733M
115V Diode	DP	–	–	–	–	TE734M
125V Diode	DS	–	–	–	–	TE737M
220...250V Electronic	EA	TC747E	TC747E	TD747E	TD747E2	–
220V Diode	DA	–	–	–	–	TE747M
230V Diode	DF	–	–	–	–	TE749F
250V Diode	DT	–	–	–	–	TE751F

(1) Voltage operating range: 0.65...1.3 U_s
(2) Voltage operating range: 0.7...1.25 U_s
(3) Faster drop-out time (16...21 ms)
(4) Voltage operating range: 0.7...1.25 U_s at 110V DC

Specifications

Table 23 - Main Circuits

			NEMA Size			
			0	1	2	3
Coil Type:	Conventional		X	X	X	X
	Electronic – EI		X	X	X	–
AC-1 Active Power Load (50 Hz); Ambient temperature 40 °C (104 °F)						
Rated Operational Current, I_e	≤500V	[A]	32	65	85	100
	690V	[A]	32	65	85	100
Rated Operational Power, P_e	230V	[kW]	13	26	34	40
	240V	[kW]	13	27	35	42
	400V	[kW]	22	45	59	69
	415V	[kW]	23	47	61	72
	500V	[kW]	28	56	74	87
	690V	[kW]	38	78	102	120
AC-1 Active Power Load (50 Hz); Ambient temperature 60 °C (140 °F)						
Rated Operational Current, I_e	≤500V	[A]	32	65	75	100
	690V	[A]	32	65	75	100
Rated Operational Power, P_e	230V	[kW]	13	26	25	40
	240V	[kW]	13	27	26	42
	400V	[kW]	22	45	44	69
	415V	[kW]	23	47	45	72
	500V	[kW]	28	56	55	87
	690V	[kW]	38	78	75	120
Switching of 3-phase Motors; (50 Hz) Ambient temperature 60 °C (140 °F), AC-2, AC-3						
Rated Operational Current, I_e	230V	[A]	20	38	44	85
	240V	[A]	20	38	44	85
	400V	[A]	16	37	43	85
	415V	[A]	16	37	43	85
	500V	[A]	14	30	38	80
	690V	[A]	9	21	25	49
Rated Operational Power, P_e	230V	[kW]	5.5	11	13	25
	240V	[kW]	5.5	11	13	25
	400V	[kW]	7.5	18.5	22	45
	415V	[kW]	7.5	20	22	45
	500V	[kW]	7.5	20	25	55
	690V	[kW]	7.5	18.5	22	45
Load Carrying Capacity per UL/CSA						
General Purpose Current (enclosed)		[A]	30	60	75	100
Rated current (enclosed), 1-phase	115V	[A]	16	34	34	80
	230V	[A]	17	28	40	68
Rated power (enclosed), 1-phase	115V	[Hp]	1	3	3	7.5
	230V	[Hp]	3	5	7.5	15
Rated current (enclosed), 3-phase	200V	[A]	17.5	32.2	32.2	78.2
	230V	[A]	15.2	28	42	80
	460V	[A]	14	34	40	77
	575V	[A]	17	32	32	62
Rated power (enclosed), 3-phase	200V	[Hp]	5	10	10	25
	230V	[Hp]	5	10	15	30
	460V	[Hp]	10	25	30	60
	575V	[Hp]	15	30	30	60

Table 24 - Main Circuits

			NEMA Size			
			0	1	2	3
Coil Type:	**Conventional**		X	X	X	X
	Electronic – EI		X	X	X	–
Switching of 3-phase Motors, (50 Hz); Ambient temperature 60 °C (140 °F), AC-4						
Rated Operational Current, I_e	230V	[A]	20	38	44	85
	240V	[A]	20	38	44	85
	400V	[A]	16	37	43	85
	415V	[A]	16	37	43	85
	500V	[A]	14	30	38	80
	690V	[A]	9	21	25	49
Rated Operational Power, P_e	230V	[kW]	5.5	11	13	25
	240V	[kW]	5.5	11	13	25
	400V	[kW]	7.5	18.5	22	45
	415V	[kW]	7.5	20	22	45
	500V	[kW]	7.5	20	25	55
	690V	[kW]	7.5	18.5	22	45
AC-4 at approximately 200,000 operations						
Rated Operational Current, I_e	230V	[A]	9	14	16.5	38
	240V	[A]	9	14	16.5	38
	400/415V	[A]	9	14	16.5	38
	500V	[A]	9	14	16.5	38
	690V	[A]	9	14	16.5	38
Rated Operational Power, P_e	230V (1)	[kW]	2.2	3.7	4	11
	240V (1)	[kW]	2.2	4	4	11
	400V (1)	[kW]	4	6.3	7.5	20
	415V (1)	[kW]	4	6.3	7.5	20
	500V (1)	[kW]	5.5	7.5	10	25
	690V (1)	[kW]	7.5	11	15	32
Max. switching frequency		Ops/hour	220	200	200	120
Wye-Delta (60 Hz) Rated Operational Power	200V	[Hp]	7-1/2	15	20	50
	230V	[Hp]	10	20	25	60
	460V	[Hp]	20	40	50	125
	575V	[Hp]	20	40	50	125
UL/CSA Elevator Duty Rated Operational Current	200V	[A]	11.0	25.3	32.2	62.1
	230V	[A]	15.2	28.0	28.0	68.0
	460V	[A]	14.0	27.0	34.0	65.0
	575V	[A]	11.0	27.0	32.0	62.0
UL/CSA Elevator Duty Rated Operational Power	200V	[Hp]	3	7-1/2	10	20
	230V	[Hp]	5	10	10	25
	460V	[Hp]	10	20	25	50
	575V	[Hp]	10	25	30	60

(1) Power ratings at 50 Hz: Preferred values according to IEC 60072-1

Table 25 - Main Circuits

			NEMA Size			
			0	1	2	3
Coil Type:	**Conventional**		X	X	X	X
	Electronic – EI		X	X	X	–
Star-Delta Starting (50 Hz)						
Rated Operational Current, I_e	≤ 230V	[A]	35	66	76	147
	≤ 240V	[A]	35	66	76	47
	400V	[A]	28	64	74	147
	415V	[A]	28	64	74	47
	500V	[A]	24	52	66	139
	690V	[A]	16	36	43	85
Rated Operational Power, P_e	230V (1)	[kW]	10	20	22	45
	240V (1)	[kW]	10	20	22	50
	400V (1)	[kW]	13	32	40	80
	415V (1)	[kW]	15	32	40	80
	500V (1)	[kW]	15	32	45	90
	690V (1)	[kW]	13	32	40	80
Switching of Power Transformers, AC-6a (50 Hz))						
$\frac{\text{Inrush Current}}{\text{Rated transformer current}} = n$						
n= 30	≤ 230V	[A]	10.9	20	23	40.8
	≤ 240V	[A]	10.9	20	23	40.8
	≤ 400V	[A]	10.9	20	23	40.8
	≤ 415V	[A]	10.9	20	23	40.8
	≤ 500V	[A]	10.9	20	23	40.8
	≤ 690V	[A]	10.9	20	23	40.8
Apparent Power	230V	[kVA]	4.3	8	9.2	16
	240V	[kVA]	4.5	8.3	10	17
	400V	[kVA]	7.5	14	16	28
	415V	[kVA]	7.8	14	17	29
	500V	[kVA]	9.4	17	20	35
	690V	[kVA]	13	24	27	49
n=20	≤ 690V	[A]	16.3	30	34.5	61.3
n=15	≤ 690V	[A]	22	40	46	82
60 Hz Peak Inrush/peak rated transformer current						
n=30		[A]	10.9	20	23	40.8
Apparent Power	200V	[kVA]	3.8	6.9	8.0	14.4
	208V	[kVA]	3.9	7.2	8.3	14.7
	240V	[kVA]	4.5	8.3	9.6	17.0
	480V	[kVA]	9.1	16.6	19.1	33.9
	600V	[kVA]	11.3	20.8	23.9	42.4
	660V	[kVA]	12.5	22.9	26.3	46.6
60 Hz Peak Inrush/peak rated transformer current						
n=20		[A]	16.3	30	34.5	61.3
Apparent Power	200V	[kVA]	5.6	10.4	12.0	21.2
	208V	[kVA]	5.9	10.8	12.4	22.1
	240V	[kVA]	6.8	12.5	14.3	25.5
	480V	[kVA]	13.6	24.9	28.7	51.0
	600V	[kVA]	16.9	31.2	35.9	63.7
	660V	[kVA]	18.6	34.3	39.4	70.1

(1) Power ratings at 50 Hz: Preferred values according to IEC 60072-1

Table 26 - Main Circuits

			NEMA Size			
			0	1	2	3
Coil Type:	**Conventional**		X	X	X	X
	Electronic – EI		X	X	X	–
60 Hz Peak Inrush/peak rated transformer current						
n=15		[A]	22	40	46	82
Apparent Power	200V	[kVA]	7.5	13.9	15.9	28.4
	208V	[kVA]	7.8	14.4	16.6	29.5
	240V	[kVA]	9.0	16.6	19.1	34.1
	480V	[kVA]	18.1	33.3	38.2	68.2
	600V	[kVA]	22.6	41.6	47.8	85.2
	660V	[kVA]	24.9	45.7	52.6	93.7

Table 27 - Main Circuits

			NEMA Size			
			0	1	2	3
Coil Type:	**Conventional**		X	X	X	X
	Electronic – EI		X	X	X	–
Switching of 3-phase Capacitors, AC-6b (50 Hz)(1)						
Single capacitor 40 °C (104 °F)	230V	[kVAR]	8.5	14	24	28
	240V	[kVAR]	8.5	14	25	29
	400V	[kVAR]	10	24	35	48
	415V	[kVAR]	10	25	35	50
	500V	[kVAR]	10	25	35	60
	690V	[kVAR]	10	25	35	60
Single capacitor 60 °C (140 °F)	230V	[kVAR]	8.5	12.5	18	28
	240V	[kVAR]	8.5	12.5	18	29
	400V	[kVAR]	10	21.5	30	48
	415V	[kVAR]	10	22	30	50
	500V	[kVAR]	10	25	30	55
	690V	[kVAR]	10	25	30	55
Group capacitors 40 °C (104 °F)	230V	[kVAR]	8	14	20	28
	240V	[kVAR]	8	14	20	29
	400V	[kVAR]	8	20	25	48
	415V	[kVAR]	8	20	25	50
	500V	[kVAR]	8	20	25	50
	690V	[kVAR]	8	20	25	50
Group capacitors 60 °C (140 °F)	230V	[kVAR]	8	12.5	18	28
	240V	[kVAR]	8	12.5	18	29
	400V	[kVAR]	8	20	25	48
	415V	[kVAR]	8	20	25	50
	500V	[kVAR]	8	20	25	50
	690V	[kVAR]	8	20	25	50
60 Hz Single Capacitor – 40 °C (104 °F)	200V	[kVAR]	8	14	20	28
	230V	[kVAR]	8	14	20	29
	460V	[kVAR]	8	20	25	50
	600V	[kVAR]	8	20	25	50
60 Hz Group Capacitors – 40 °C (104 °F)	200V	[kVAR]	8	12.5	18	28
	230V	[kVAR]	8	12.5	18	29
	460V	[kVAR]	8	20	25	50
	600V	[kVAR]	8	20	25	50

(1) Inductance of leads between capacitors in parallel: min. 6 µH (300-AO contactors: min 30 µH)

Table 28 - Main Circuits

			NEMA Size			
			0	1	2	3
Coil Type:	**Conventional**		X	X	X	X
	Electronic – EI		X	X	X	–
Switching of Lamps						
Gas discharge lamps AC-5a, 40 °C (104 °F)						
open		[A]	28	45	77	90
enclosed		[A]	28	41	57	90
Individually compensated:						
Max. capacitance at expected						
Short-circuit current of	10 kA	[µF]	1000	2700	3200	4700
	20 kA	[µF]	500	1350	1600	2350
	50 kA	[µF]	200	540	640	940
Filament AC-5b	230/240V	[A]	18	37	43	76
Switching of Low Inductive Loads in Home Appliances and Similar Applications per IEC 61095 (50 Hz)						
AC-7a	230V	[A]	32	45	63	–
	400V	[A]	32	45	63	–
	440V	[A]	32	45	63	–
Switching of Motor Load for Home Appliances (50 Hz)						
AC-7b	230V	[A]	19	–	–	–
	400V	[A]	16	–	–	–
	440V	[A]	13.5	–	–	–
Switching of Hermetically Sealed Cooling Compressor Motors - manual reset of overload release (50 Hz)						
AC-8a	400V	[A]	22	45	63	100
	500V	[A]	22	45	63	100
	690V	[A]	14	35	42	80
- automatic reset of overload release						
AC-8b	400V	[A]	9.3	14	16	35
	500V	[A]	9.3	14	16	35
	690V	[A]	9.3	14	16	35
Switching of DC Loads						
Non-inductive or slightly inductive loads or resistance furnaces DC-1, 60 °C (140 °F)						
1 pole	24V	[A]	32	45	50	80
	48/60V	[A]	20	25	30	40
	110V	[A]	6	8	9	11
	220V	[A]	1.5	1.5	1.5	2
	440V	[A]	0.4	0.4	0.5	0.5
2 poles in series	24V	[A]	32	45	50	80
	48/60V	[A]	32	45	50	80
	110V	[A]	32	45	50	80
	220V	[A]	8	10	10	15
	440V	[A]	1	1	1	1.5
3 poles in series	24V	[A]	32	45	63	100
	48/60V	[A]	32	45	63	100
	110V	[A]	32	45	63	100
	220V	[A]	32	45	50	80
	440V	[A]	3	3.5	4	5

Table 29 - Main Circuits

			NEMA Size			
			0	1	2	3
Coil Type:	**Conventional**		X	X	X	X
	Electronic – EI		X	X	X	–
Switching of DC Loads, Continued						
Shunt-wound Motors, Starting, reverse current braking, reversing, stepping DC-3, 60 °C (140 °F)						
3 poles in series	24V	[A]	32	45	63	100
	48/60V	[A]	32	45	50	80
	110V	[A]	25	30	35	80
	220V	[A]	6	15	20	30
	440V	[A]	0.6	0.6	0.6	0.6
Series-wound Motors, Starting, reverse current braking, reversing, stepping DC-5, 60 °C (140 °F)						
3 poles in series	24V	[A]	32	45	63	100
	48/60V	[A]	32	45	50	80
	110V	[A]	25	30	35	80
	220V	[A]	6	15	20	30
	440V	[A]	0.6	0.6	0.6	0.6
Short Time Withstand I_{CW}, 60 °C (140 °F)	10 s	[A]	170	304	375	700
Resistance and Power Dissipation						
Main current circuit resistance		[mΩ]	2.7	2	1.5	0.9
Power dissipation by all circuits at I_e AC-3/400V		[W]	2.1	8.2	8.3	19.5
Total power dissipation At I_e AC-3/400V	AC control	[W]	4.8	11.3	11.6	24
	DC control (conv.)	[W]	–	–	–	23.5
	DC control (elect.)	[W]	3.8	9.9	10.8	–
Lifespan						
Mechanical AC control		[Million ops.]	13	13	12	6
Mechanical DC control		[Million ops.]	13	13	13	6
Electrical AC-3 (400 V)		[Million ops.]	1.3	1.3	1	1

Table 30 - Conductors

			NEMA Size			
			0	1	2	3
Coil Type:	**Conventional**		X	X	X	X
	Electronic – EI		X	X	X	–
Conductor Cross Sections - Main Contacts Terminal type			(1)			
	1 conductor	[mm²]	1...4	2.5...10	2.5...16	2.5...35
	2 conductors	[mm²]	1...4	2.5...10	2.5...10	2.5...25
	1 conductor	[mm²]	1.5...6	2.5...16	2.5...25	2.5...50
	2 conductors	[mm²]	1.5...6	2.5...16	2.5...16	2.5...35
Recommended torque		[N•m]	1.5...2.0	2.5...3.5	2.5...3.5	4.5...6
Cross section per UL/CSA		[AWG]	16...10	14...4	14...6	14...1
Recommended torque		[lb•in]	13.3...17.7	22...31	22...31	40...53
Conductor Cross Sections - Coil Terminal type			(1)			
	1 conductor	[mm²]	1...2.5			
	2 conductors	[mm²]	1...2.5			
	1 conductor	[mm²]	1...4			
	2 conductors	[mm²]	1...4			
Recommended torque		[N•m]	1...1.5			
Cross section per UL/CSA		[AWG]	16...12			
Recommended torque		[lb•in]	9...13			

(1) Pozidriv No. 2 / Blade No. 3 screw
(2) Pozidriv No. 2 / Blade No. 4 screw
(3) Hexagonal socket screw

Table 31 - Short-circuit Coordination Data[1]

			NEMA Size			
			0	1	2	3
Coil Type:	**Conventional**		**X**	**X**	**X**	**X**
	Electronic - EI		**X**	**X**	**X**	**–**
Short Circuit Coordination (Max. Fuse or Circuit Breaker Rating) Per IEC 60947-4-1 (contactor and fuses only)						
DIN Fuses- gG, gL			50 kA Available Fault Current			
	Type"1"(690V)	[A]	50	125	160	250
	Type"2"(400V)	[A]	35	80	100	160
	Type"2"(690V)	[A]	35	80	100	160
BS88Fuses			65kA Available Fault Current			
	Type"1"(415V)	[A]	40	80	80	160
	Type"2"(415V)	[A]	32	80	80	160
Per UL 508 and CSA 22.2 No. 14 (contactor and fuses or circuit breaker only)						
UL Class K5 and RK5 Fuses	UL Listed Combination (600V)		5 kA Available Fault Current			
		[A]	70	125	150	–
			10 kA Available Fault Current			
		[A]	–	–	–	300
UL Class CC and CSA HRCI-MISC Fuses	UL verified combination to IEC60947-4-1 "Type2"		100 kA Available Fault Current			
		[A]	30	–	–	–
UL Class J and CSA HRCI-J Fuses	UL verified combination to IEC60947-4-1 "Type2"		100 kA Available Fault Current			
		[A]	30	50	70	150
UL Inverse-time Circuit Breaker	UL Listed Combination (480V)		5 kA Available Fault Current			
		[A]	50	125	125	–
	UL Listed Combination (600V)	[A]	–	125	125	–
			10 kA Available Fault Current			
		[A]	–	–	–	250
			18 kA Available Fault Current			
		[A]	–	–	–	–
	UL Listed Combination (600Y/347V)		25 kA Available Fault Current			
		[A]	30[2]	50[3]	50[3]	110
	UL Listed Combination (600V)	[A]	–	100[4]	100[4]	225[4]
	UL Listed Combination (480V)		50 kA Available Fault Current			
		[A]	–	50[3]	50[3]	–
	UL Listed Combination (480Y/277V)		65 kA Available Fault Current			
		[A]	30[2]	–	–	–
	UL Listed Combination (480V)	[A]	–	100[4]	100[4]	225[4]

(1) See the Rockwell Automation Global SCCR Tool at rok.auto/sccr for complete short-circuit current ratings.
(2) Ratings apply when used with Bulletin 140U-D circuit breakers only.
(3) Minimum enclosure size 12-3/8 x 7-5/8 x 7-1/4 inches
(4) Minimum enclosure size 20 x 12 x 8 inches with two latches.

Table 32 - Coil Data

			NEMA Size			
			0	1	2	3
Coil Type:	**Conventional**		X	X	X	X
	Electronic - EI		X	X	X	–
Operating Limits						
50 Hz, 60 Hz, 50/60 Hz	pick-up	[x U_S]	0.85...1.1			
	dropout	[x U_S]	0.3...0.6			
DC (conventional)	pick-up	[x U_S]	–			0.8...1.1
	dropout	[x U_S]	–			0.1...0.6
DC (electronic–EQ, EJ, QJ)	pick-up	[x U_S]	0.7...1.25			–
	dropout	[x U_S]	0.3...0.4			–
DC (electronic–EY)	pick-up	[x U_S]	0.8...1.25			–
	dropout	[x U_S]	0.3...0.4			–
DC (electronic–ED)	pick-up	[x U_S]	0.7...1.12(1)			–
	dropout	[x U_S]	0.3...0.4			–
DC (electronic–EA)	pick-up	[x U_S]	0.8...1.1			–
	dropout	[x U_S]	0.3...0.4			–
Coil Consumption						
50 Hz, 60 Hz, 50/60 Hz	pick-up	[VA]	75	105	135	235
	hold-in	[VA/W]	9.5/2.7	12.3/3.1	13.3/3.3	19.6/5
DC (conventional)	pick-up	[W]	–	–	–	200
	hold-in	[W]	–	–	–	4
DC (electronic–EQ, EJ, QJ)	pick-up (avg/peak)	[W]	10/17		16/25	–
	hold-in	[W]	1.7		2.5	–
DC (electronic–EY)	pick-up (avg/peak)	[W]	10/17		16/25	–
	hold-in	[W]	1.9		2.7	–
DC (electronic–ED)	pick-up (avg/peak)	[W]	12/19		16/26	–
	hold-in	[W]	2.1		2.8	–
DC (electronic–EA)	pick-up (avg/peak)	[W]	14/22		18/29	–
	hold-in	[W]	3.0		4.0	–
Operating Times						
AC	closing delay	[ms]	15...30			20...40
	opening delay	[ms]	10...60			
With RC module	closing delay	[ms]	10...60			
DC (conventional)	opening delay	[ms]	–			20...40
	closing delay	[ms]	–			20...40
With integrated diode	opening delay	[ms]	–			≤ 220V 20...35
With external diode	opening delay	[ms]	–			–
DC (electronic–EQ, EJ)	closing delay	[ms]	20...50			–
	opening delay	[ms]	20...50			–
	Max. Ripple		±15%			–
	min. OFF time	[ms]	50			–
DC (electronic– EY, ED, EA)	closing delay	[ms]	20...50			–
	opening delay	[ms]	23...33			–
	Max. Ripple		±15%			–
	min. OFF time	[ms]	50			–
DC (electronic–QJ)	closing delay	[ms]	20...50			–
	opening delay	[ms]	16...21			–
	Max. Ripple		±15%			–
	min. OFF time	[ms]	50			–

(1) 0.7...1.25 at 110V DC

Table 33 - Auxiliary Contacts, Auxiliary Contact Blocks, and Pneumatic Timers

			Internal	Front mounted	Front mounted (Bifurcated)	Side-mounted
Switching of AC Loads						
AC-12 I_{th}	at 40 °C (104 °F)	[A]	20	10	10	10
	at 60 °C (140 °F)	[A]	20	6	6	6
AC-15 at rated voltage of	24V	[A]	10	6	3	6
	42/48V	[A]	10	6	3	6
	120V	[A]	10	6	3	6
	230V	[A]	10	5.5	3	5.5
	240V	[A]	10	5	3	5
	400V	[A]	6	3	2	3
	415V	[A]	6	3	2	3
	500V	[A]	2.5	1.6	1.2	1.6
	690V	[A]	1	1	0.7	1
Switching of DC Loads						
DC-12 L/R < 1 ms resistive loads at	24V DC	[A]	12	12	6	6
	48V DC	[A]	9	9	3.2	3.2
	110V DC	[A]	3.5	3.5	1	1
	220V DC	[A]	0.55	0.55	0.5	0.5
	440V DC	[A]	0.2	0.2	0.2	0.2
DC-14L/R <15 ms inductive loads with economy resistor in series at	24V DC	[A]	9	9	2	2
	48V DC	[A]	5	5	1.6	1.6
	110V DC	[A]	2	2	0.3	0.3
	220V DC	[A]	0.4	0.4	0.12	0.12
	440V DC	[A]	0.16	0.16	0.05	0.05
DC-13 switching electromagnets at	24V DC	[A]	5	5	2.5	5
	48V DC	[A]	3	3	1.5	2.5
	110V DC	[A]	1.2	1.2	0.6	0.68
	220V DC	[A]	0.6	0.6	0.3	0.32
	440V DC	[A]	0.3	0.15	0.15	0.15
Fuse gG						
Short-circuit protection with no welding of contacts per IEC 60947-5-1		[A]	20	10	10	10
		[A]	20	10	10	10
Protective Separation per IEC 60947-1, Annex N			between load and auxiliary circuit 320V	between load and auxiliary circuit 440V		
Min. switching capacity according to IEC 60947-5-4			17V/10mA	17V/5mA	5V/3mA	17V/10mA
Load Carrying Capacity per UL/CSA						
Rated voltage	AC	[V]	max.600			
Continuous rating	40 °C (104 °F)	[A]	10	10	10	10
Switching capacity	AC	[A]	A600			
Rated voltage	DC	[V]	max.600			
Switching capacity	DC	[A]	P600	Q600	Q600	

Table 34 - General Specifications

Attribute		Value
Rated Isolation Voltage U_i		
IEC	[V]	690
UL, CSA	[V]	600
Rated Impulse Voltage Withstand U_{imp}	[kV]	6
Rated Voltage U_e		
AC 50/60 Hz	[V]	115, 200, 230, 240, 400, 415, 460, 500, 575, 690
DC	[V]	24, 48, 110, 220, 440
Insulation Class of the Coil		Class F per IEC 60085, UL Class 105
Rated coil frequency		AC 50/60Hz, DC
Ambient Temperature		
Storage	[°C (°F)]	-55...+80 (-67...176)
Operation at rated voltage	[°C (°F)]	-25...+60 (-13...140)
at 70 °C (158 °F)		15% current reduction against 60 °C (140 °F) values
Climatic Withstand		IEC 60068-2-1/-2/-30
Max. Altitude of Installation Site	[m]	2000 NN, per IEC60947-1
Protection Class	Size 0	IP2X from all directions
	Sizes 1...2	IP2X from front with front (upper) terminal wired
	Size 3	IP2X from front with front (upper) terminal wired (min. wire size 16 mm^2 or #6 AWG)
Single contactor cover		–
Contactor with frame terminal block		–
Auxiliary contact		IP2X
Protection against Accidental Contact		Finger- and back-of-hand proof per VDE0106, part100
Resistance to Shock		IEC60068-2-27
Resistance to Vibration		IEC60068-2-6

Table 35 - Standards Compliance and Certifications

Standards Compliance	Certifications
EN/IEC 60947-4-1, 60947-5-1	CE Marked
IEC 60947 Type "2" Coordination	CCC
CSA 22.2. No. 14	cULus Listed (File No. E3125; Guide NLDX, NLDX7)
UL 508	
Meets the material restrictions for European Directive 2002/95/IEC-EU-RoHS	

Typical Wiring Diagrams

Figure 65 - Bulletin 305 Reversing Starters, NEMA Sizes 0...3 (Series B)

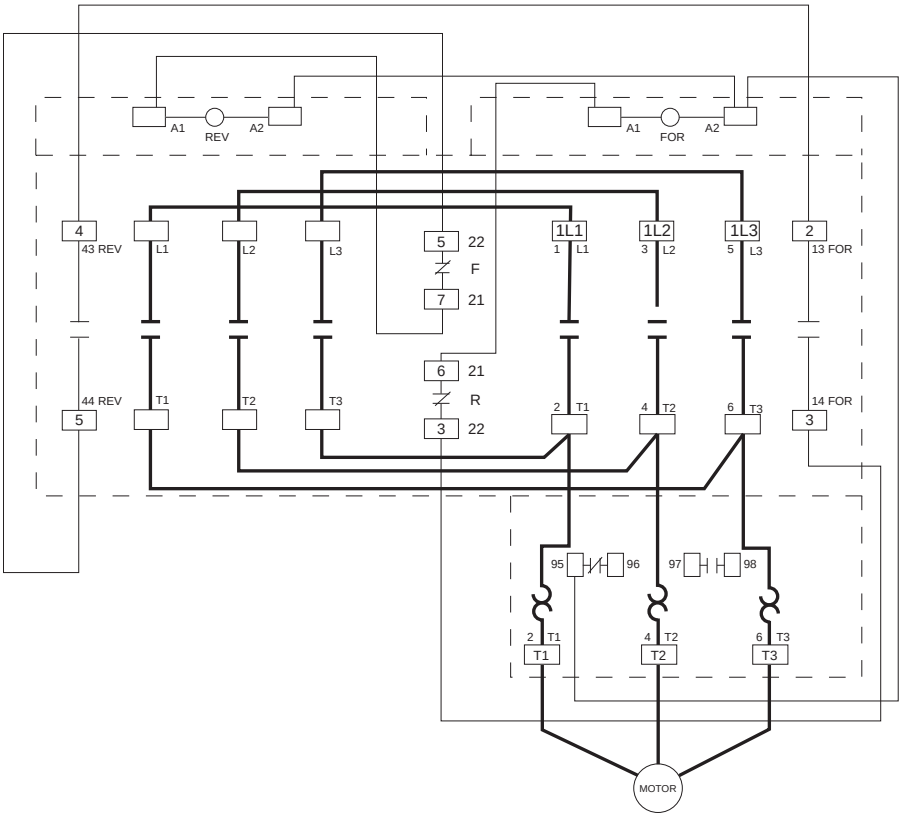

Figure 66 - Bulletin 309 Non-reversing Starters, NEMA Sizes 0...3 (Series B)

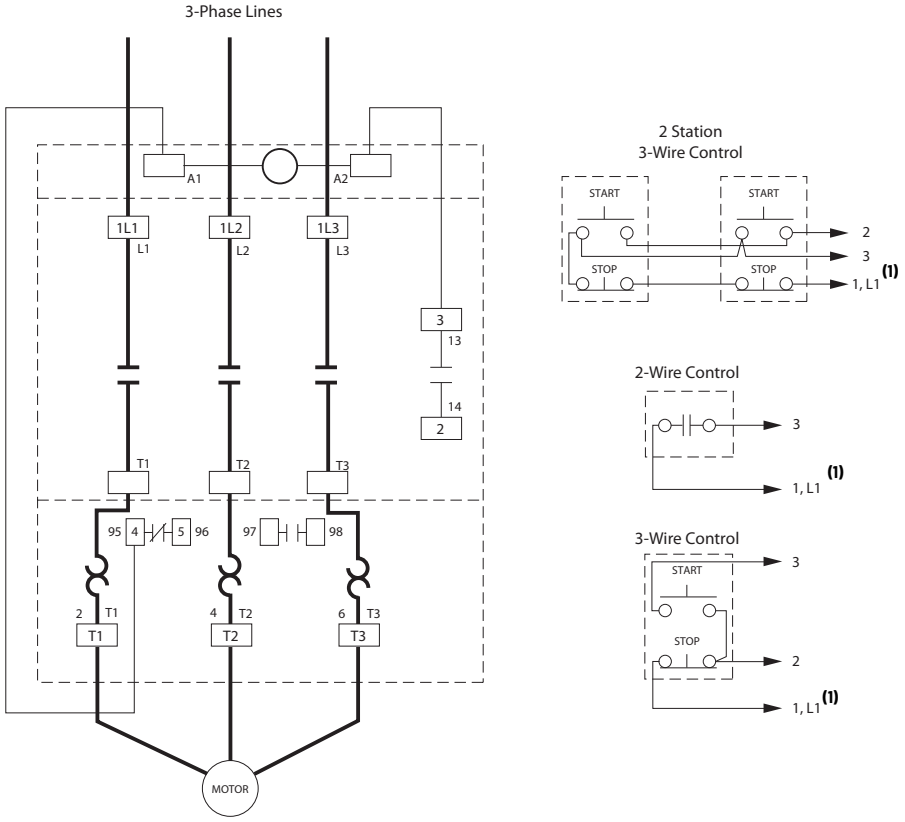

Note	Information
1	Diagram reference '1' refers to a termination on a voltage source other than the contactor (example: control circuit fuse block or control circuit transformer)

Life-Load Curves

Bulletin 100-C/104-C IEC contactors are designed for superior performance in a wide variety of applications. When selecting IEC products, the user must give consideration to the specific load, utilization category, and required electrical life of the application. The life-load curves shown here are based on Rockwell Automation tests according to the requirements defined in IEC 60947-4-1. Since contact life in application is dependent on environmental conditions and duty cycle, actual application contact life may vary from that indicated by the curves shown here.

To find the estimated electrical life of the contactor, follow these guidelines:

1. Identify the appropriate utilization category from Table 36.
2. Choose the graph for the utilization category selected.
3. Locate the intersection of the life-load curve for the appropriate contactor with the application's operational current (I_e) found on the horizontal axis.
4. Read the estimated contact life along the vertical axis.

Contact Life for Mixed Utilization Categories AC-3 and AC-4:

In many applications, the utilization category cannot be defined as either purely AC-3 or AC-4. In those applications, the electrical life of the contactor can be estimated from the following equation:

$L_{mixed} = L_{ac3}/[1 + P_{ac4}*(L_{ac3}/L_{ac4} - 1)]$, where:

L_{mixed} = Approximate contact life in operations for a mixed AC-3/AC-4 utilization category application

L_{ac3} = Approximate contact life in operations for a pure AC-3 utilization category (from the AC-3 life-load curves)

L_{ac4} = Approximate contact life in operations for a pure AC-4 utilization category (from the AC-4 life-load curves)

P_{ac4} = Percentage of AC-4 operations

Table 36 - Utilization Category Determination

Test Conditions			Making			Breaking		
			I/I_e	U/U_e	cos ϕ	I_c/I_e	U_r/U_e	cos ϕ
AC-1	Resistance Furnaces: Non inductive or slightly inductive loads		1	1	0.95	1	1	0.95
AC-2	Slip-ring motors: Starting and reversing		2.5	1	0.65	2.5	1	0.65
AC-3	Squirrel-cage motors: Starting and stopping of running motors	I_e < 17 A I_e > 17 A	6 6	1 1	0.65 0.35	1 1	0.17 0.17	0.65 0.35
AC-4	Squirrel-cage motors: Starting, plugging(1), inching(2)	I_e < 17 A I_e > 17 A	6 6	1 1	0.65 0.35	6 6	1 1	0.65 0.35
AC-15	Solenoids: Contactors, valves and lifting magnets		10	1	0.7	1	1	0.4

(1) Plugging is understood as stopping or reversing the motor rapidly by reversing motor primary connections while the motor is running.
(2) Inching (jogging) is understood as energizing a motor once or repeatedly for short periods to obtain small movements of the driven mechanism.

- I_e Rated operational current
- I Making Current
- I_c Breaking Current
- U Off-load voltage
- U_e Rated voltage
- U_r Recovery voltage

Figure 67 - AC-1, 40 °C (104 °F) Non- or slightly inductive loads, resistance furnaces; U_e = 230...690V

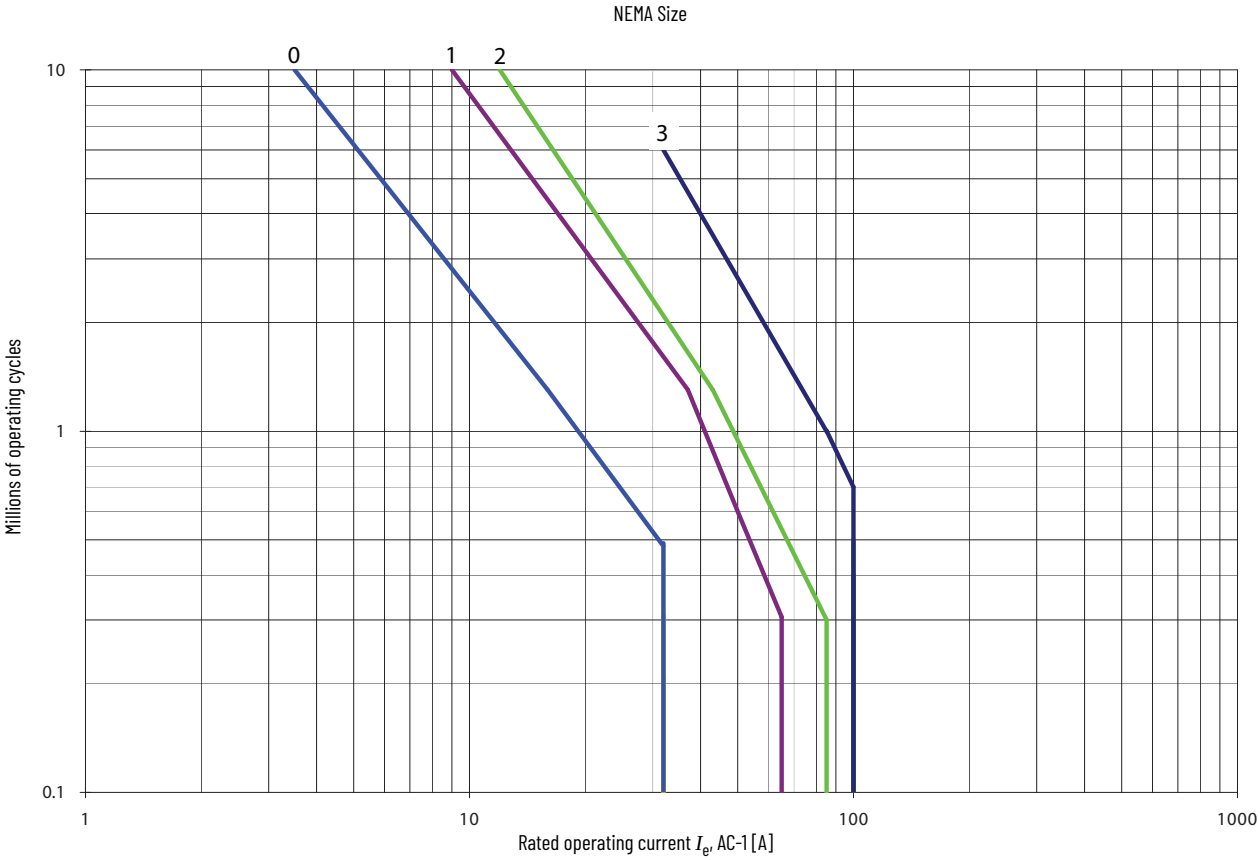

Figure 68 - AC-2, Switching of slip-ring motors; U_e = 230...400...460V

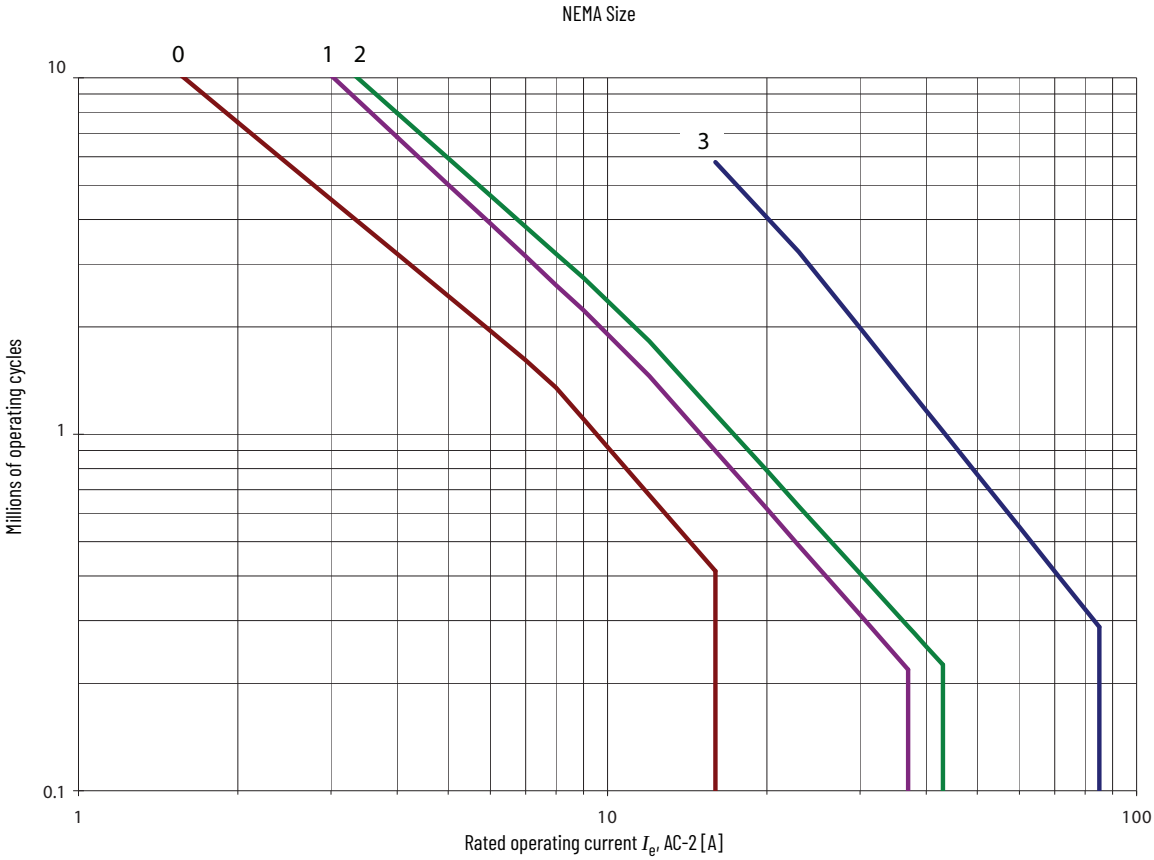

Figure 69 - AC-3, Switching of squirrel-cage motors while starting; U_e = 230...400...460V

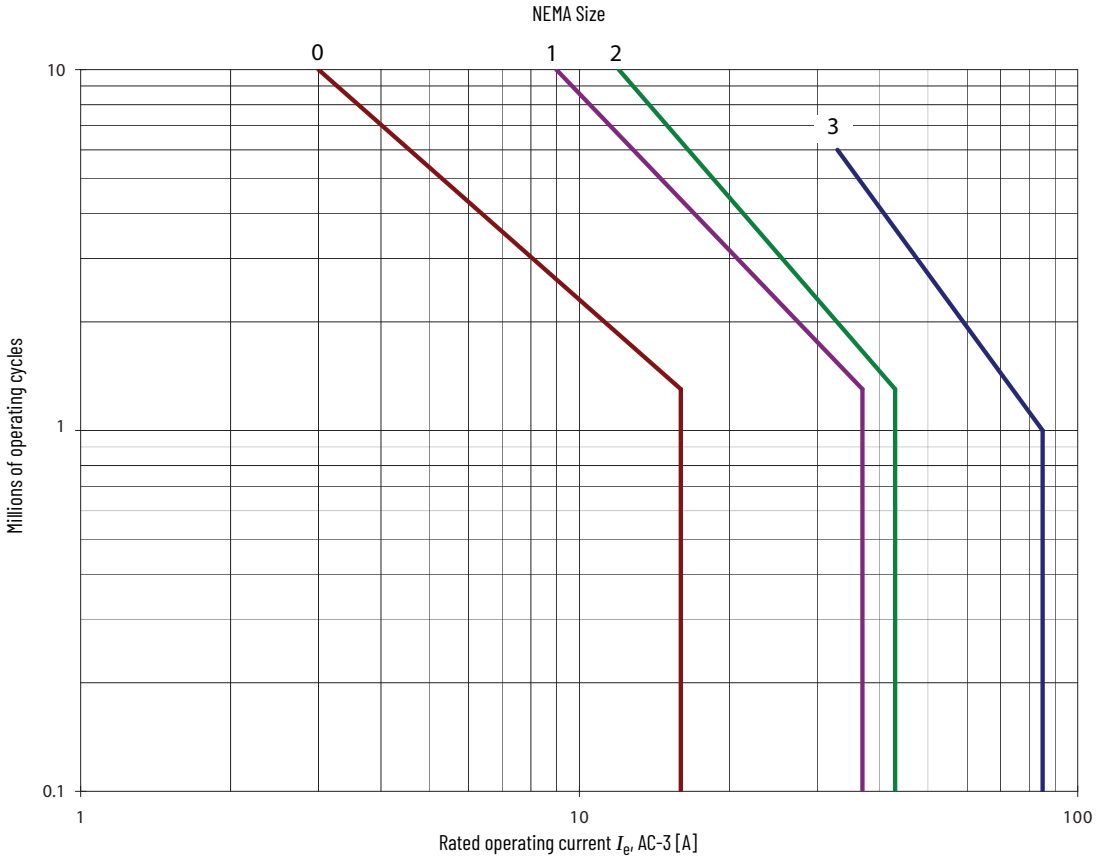

Figure 70 - AC-3, Switching of squirrel-cage motors while starting; U_e = 500...575V

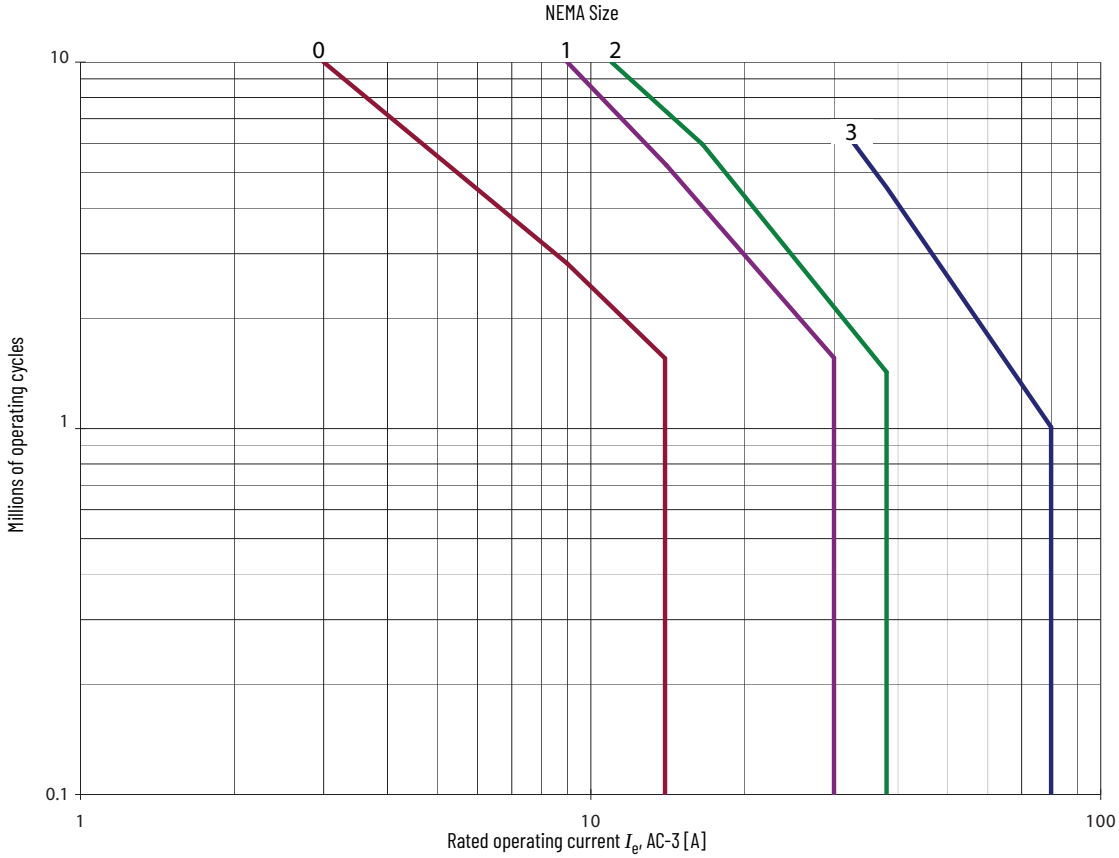

Figure 71 - AC-3, Switching of squirrel-cage motors while starting; U_e = 690V

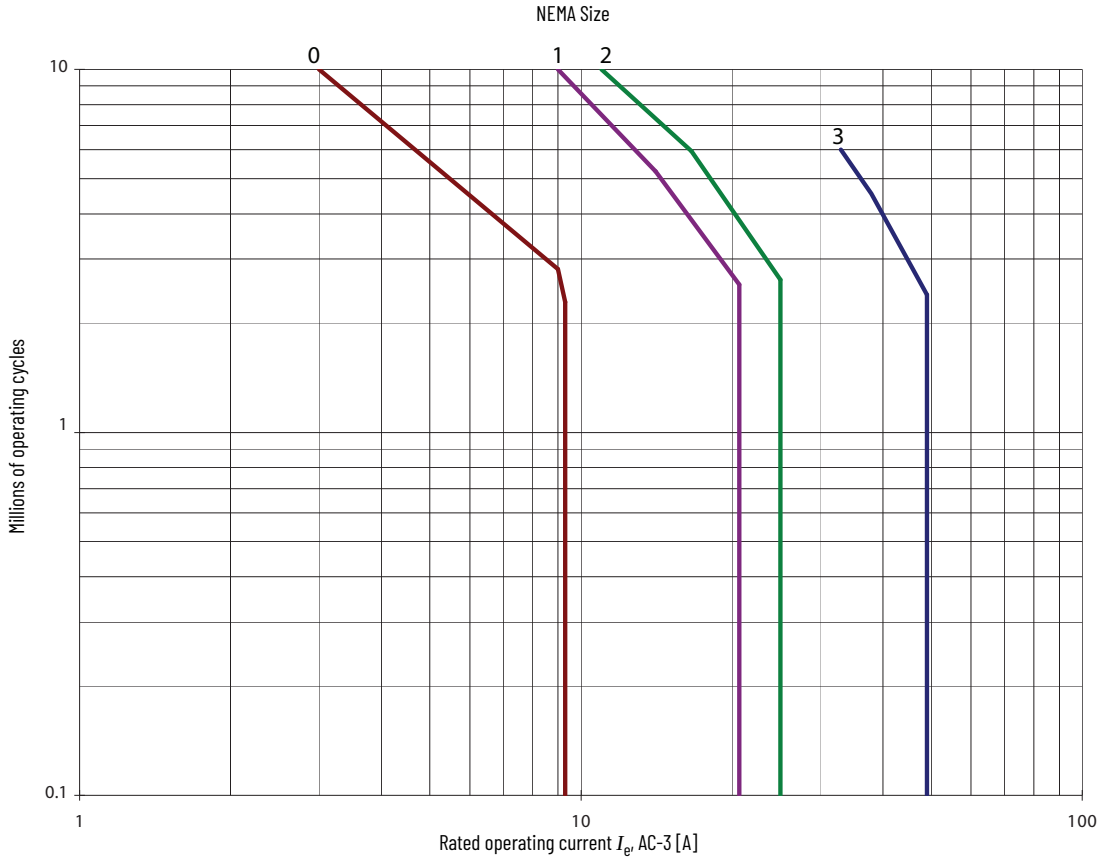

Figure 72 - AC-4, Switching of squirrel-cage motors; U_e = 230...690V

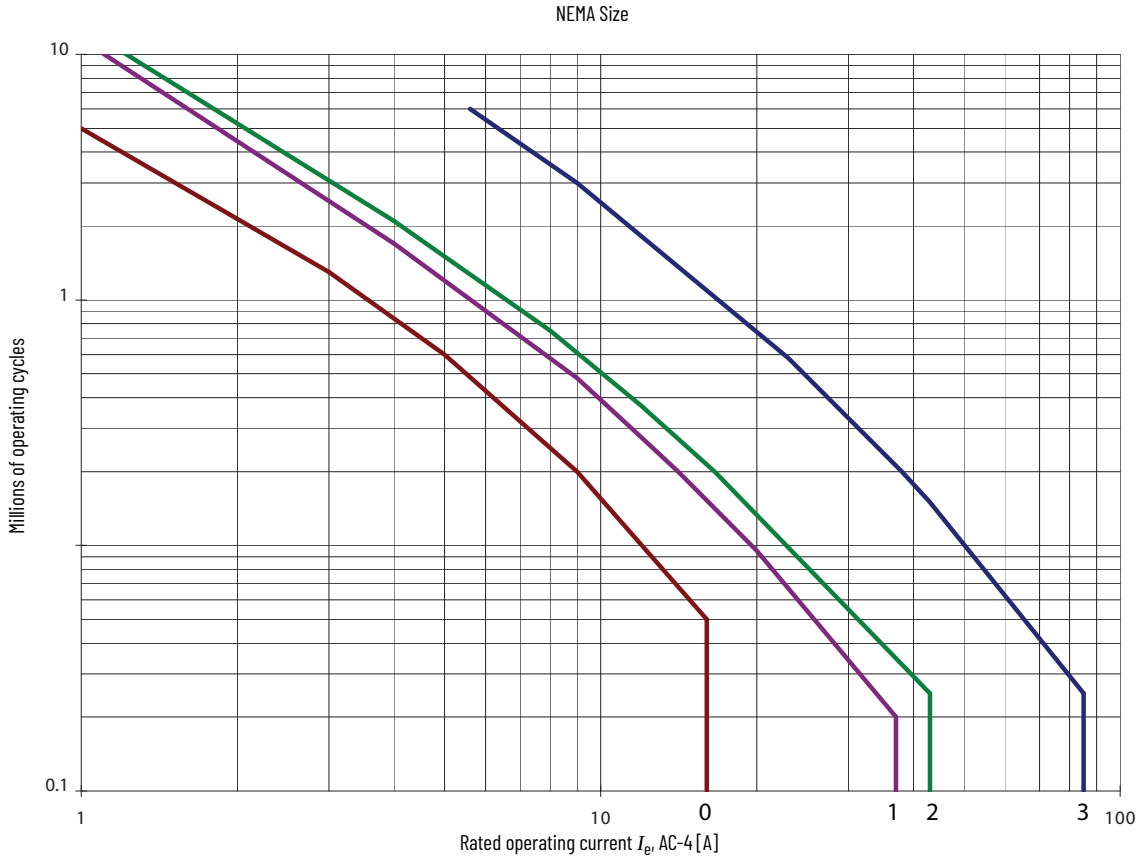

Figure 73 - AC-3 & AC-4, 10% AC-4 Mixed operation of squirrel-cage motors; U_e = 230...400...460V

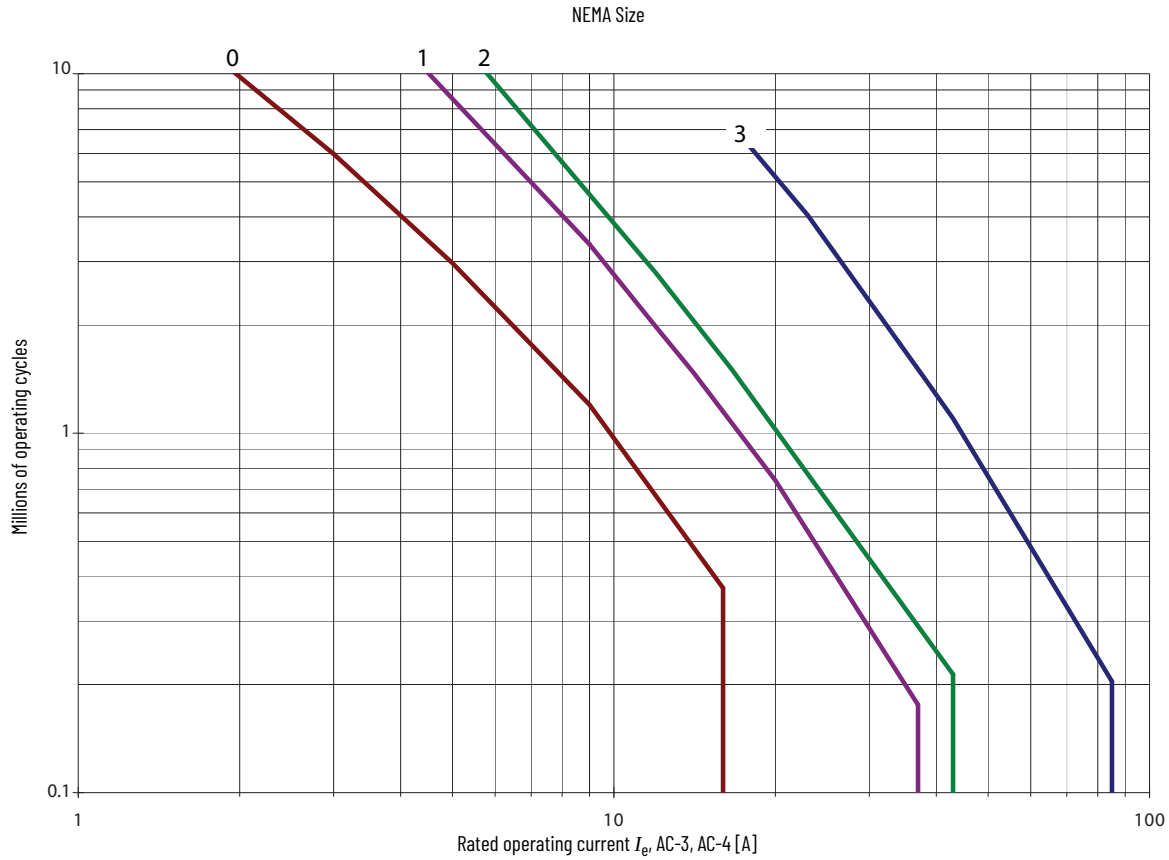

Figure 74 - Heavy Duty Starting and Regular Short-time Operation

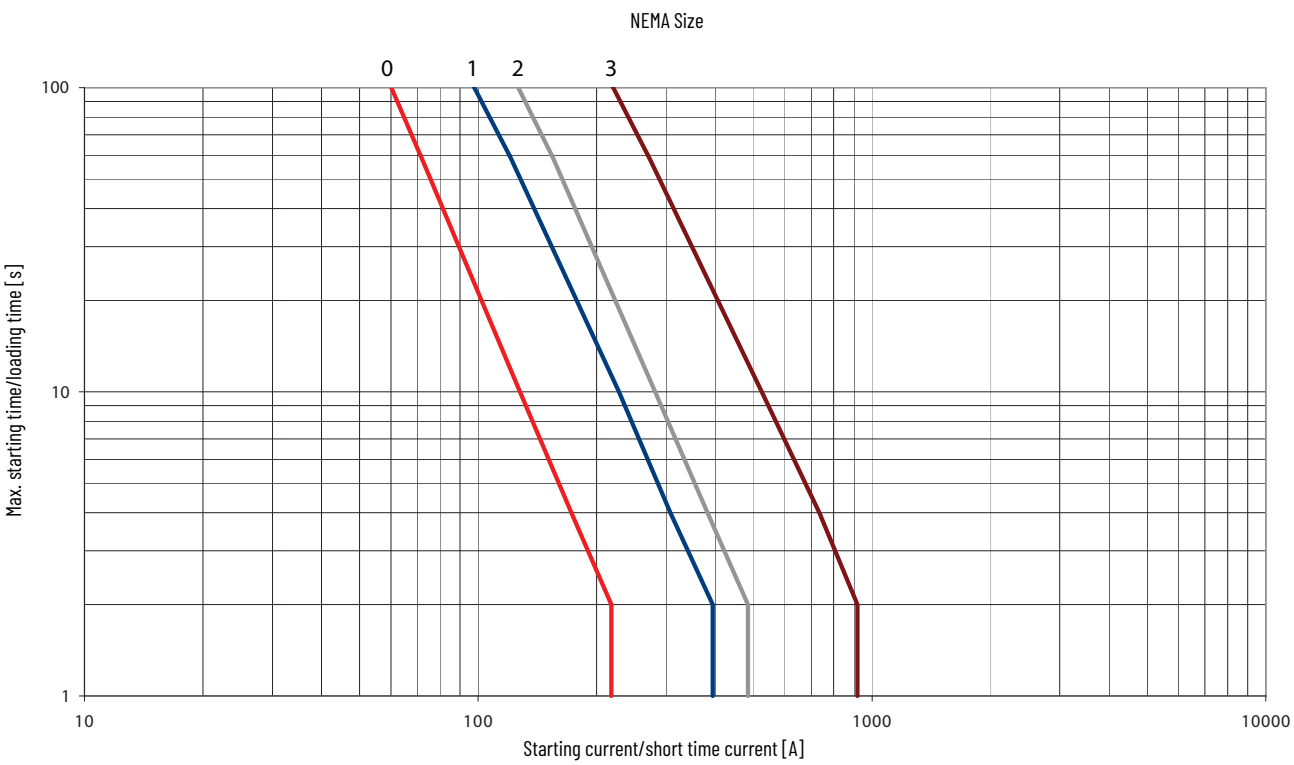

Approximate Dimensions

Dimensions are shown in inches (millimeters). Dimensions are not intended to be used for manufacturing purposes.

Figure 75 - Bulletin 300 Contactors and Accessories (NEMA Sizes 0...3)

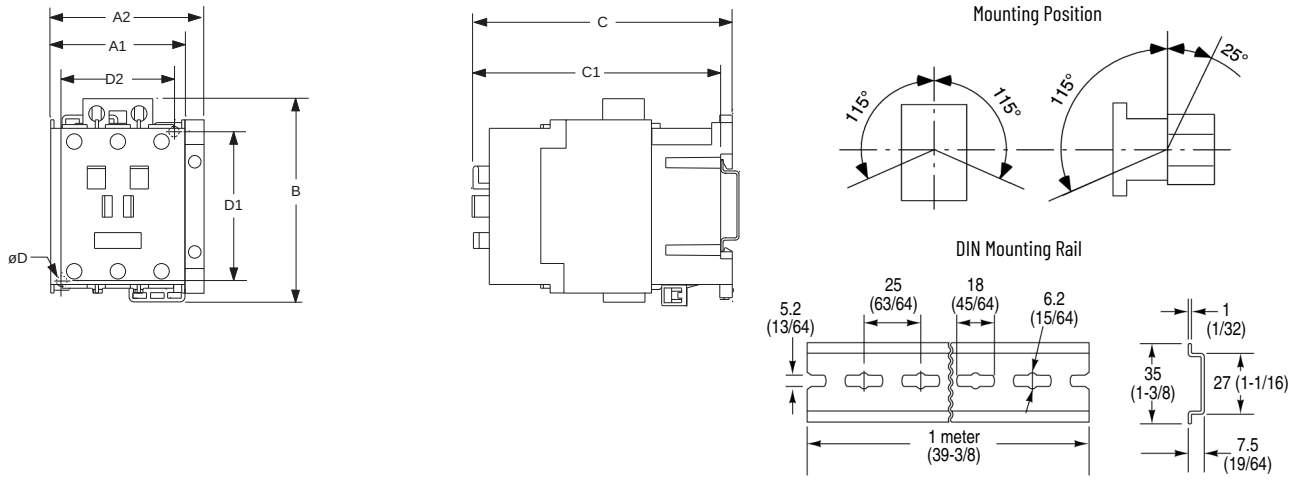

Cat. No.	NEMA Size	A1	A2	B	C	C1	Mounting Dimensions		
							ØD	D1	D2
300-A0_	0	1.76 (45)	–	3.19 (81)	3.39 (86)	3.19 (81)	0.17 (4.5)	2.36 (60)	1.38 (35)
300-B0_	1	–	2.12 (54)	3.19 (81)	4.06 (103)	3.86 (98)	0.17 (4.5)	2.36 (60)	1.38 (35)
300-C0_	2	–	2.48 (63)	3.19 (81)	4.17 (106)	3.98 (101)	0.17 (4.5)	2.36 (60)	1.77 (45)
300-D0_	3	–	3.19 (81)	4.80 (122)	4.80 (122)	4.61 (117)	0.22 (5.4)	3.94 (100)	2.17 (55)

Additional Dimensions for Accessories

Contactors with		[in. (mm)]
Auxiliary contact block for front mounting	2- or 4-pole	C/C1 + 1.54 (39)
Auxiliary contact block for side mounting	1- or 2-pole	A + 0.35 (9)
Pneumatic Timing Module		C/C1 + 2.28 (58
Electronic Timing Module	on coil terminal side	B + 0.94 (24)
Mechanical Interlock	on side of contactor	A + 0.35 (9)
Mechanical Latch		C/C1 + 2.40 (61)
Interface Module	on coil terminal side	B + 0.35 (9)
Surge Suppressor	on coil terminal side	B + 0.12 (3)
Labeling with:	label sheet	+ 0
	marking tag sheet with clear cover	+ 0
	marking tag adapter for System V4/V5	+ 0.22 (5.5)
	marking tag adapter for System Bulletin 1492W	+ 0.22 (5.5)

Figure 76 - Bulletin 305 Reversing Starter with E1 Plus Solid-state Overload Relay (NEMA Sizes (0...3)

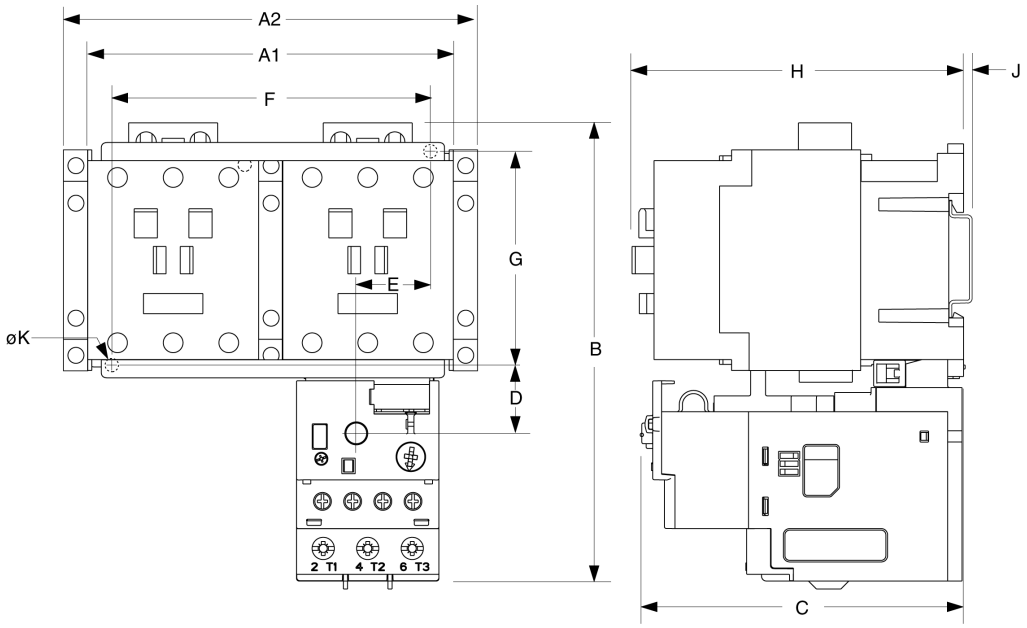

Cat. No.	NEMA Size	A1	A2	B	C	D	E	F	G	H	J	Ø K
305-A0_	0	3.9 (99)	–	5.77 (147)	3.35 (85.2)	0.96 (24.5)	0.83 (21.1)	3.54 (90)	2.36 (60)	3.4 (86.5)	0.08 (2)	0.17 (4.5)
305-B0_	1	–	4.61 (117)	5.77 (147)	3.98 (101)	0.96 (24.5)	0.83 (21.1)	3.54 (90)	2.36 (60)	4.09 (104)	0.08 (2)	0.17 (4.5)
305-C0_	2	–	4.61 (117)	5.77 (147)	3.98 (101)	0.96 (24.5)	0.83 (21.1)	3.54 (90)	2.36 (60)	4.09 (104)	0.08 (2)	0.17 (4.5)
305-D0	3	–	6.74 (171)	758 (192.3)	4.75 (120.4)	1.14 (29)	1.23 (31.2)	5.35 (136)	3.94 (100)	4.94 (125.5)	0.08 (2)	0.39 (5.4)

Figure 77 - Bulletin 309 Full Voltage Starter with E1 Plus Solid-State Overload Relay (NEMA Sizes 0...3)

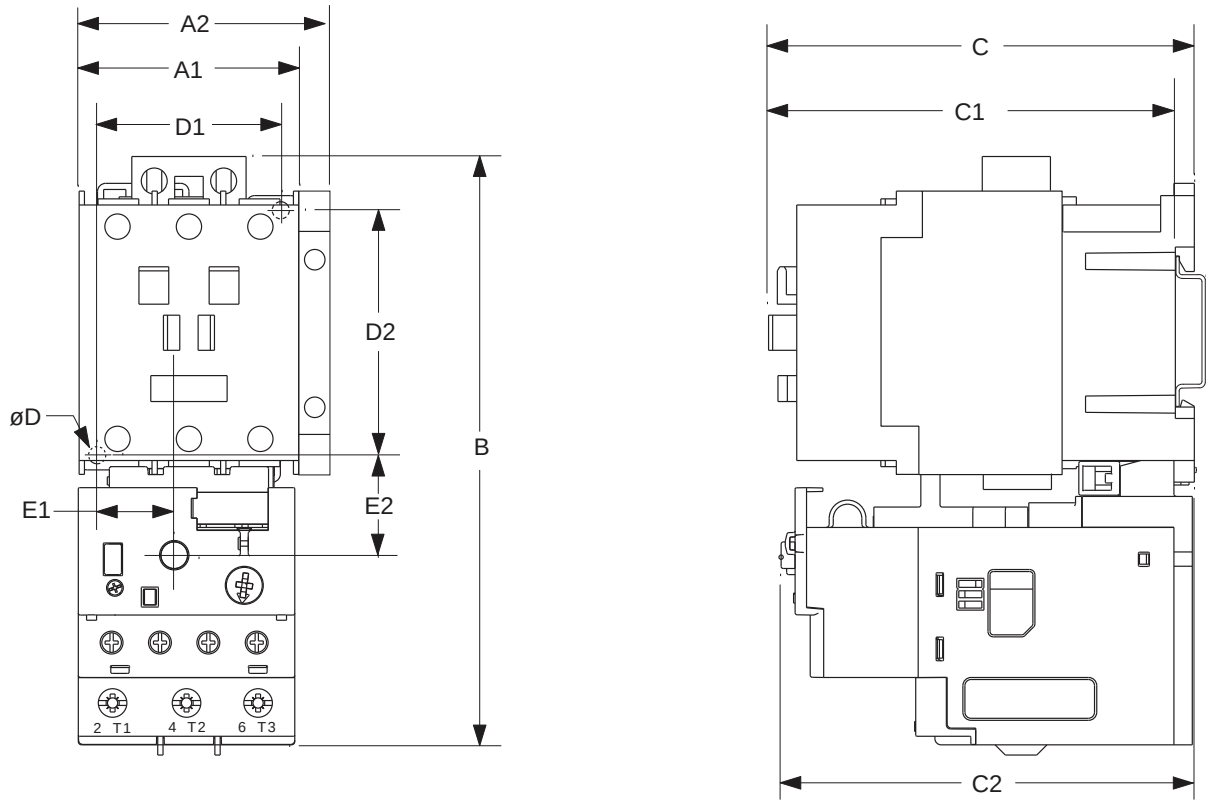

Cat. No.	NEMA Size	A1	A2	B	C	C1	C2	Mounting Dimensions			Resent Location	
								Ø D	D1	D2	E1	E2
193(1)-EE_B	0	1.76 (45)	–	5.77 (147)	3.39 (86)	3.19 (81)	3.35 (85)	0.17 (4.5)	2.36 (60)	1.38 (35)	2.36 (60)	1.38 (35)
193(1)-EE_D	1	–	2.12 (54)	5.77 (147)	4.06 (103)	3.86 (98)	3.98 (101)	0.17 (4.5)	2.36 (60)	1.38 (35)	2.36 (60)	1.38 (35)
193(1)-EE_D	2	–	2.48 (63)	5.77 (147)	4.17 (106)	3.98 (101)	3.98 (101)	0.17 (4.5)	2.36 (60)	1.77 (45)	2.36 (60)	1.77 (45)
193(1)-EE_E	3	–	3.19 (81)	7.58 (192)	4.80 (122)	4.61 (117)	4.74 (120)	0.22 (5.4)	3.94 (100)	2.17 (55)	3.94 (100)	2.17 (55)

(1) Valid for Bulletin Numbers 193 and 193S.

Notes:

Additional Resources

These documents contain additional information concerning related products from Rockwell Automation.

Resource	Description
NEMA Bulletin 300 Line Enclosed Contactor and Starter Specifications, publication 300-TD004	Provides specifications for enclosed Bulletin 300 contactors and starters.
E300 Overload Relay Specifications, publication 193-TD006	Provides product selection information and specifications for E300 overload relays.
E1 Plus Overload Relay Specifications, publication 193-TD011	Provides specifications for E1 Plus overload relays.
Rockwell Automation Global SCCR Tool, rok.auto/sccr	Provides coordinated high-fault branch circuit solutions for motor starters, soft starters, and component drives.
North American Standards, Configurations, and Ratings: Introduction to Motor Circuit Design, publication IC-AT001	Provides an overview of North American motor circuit design, based on methods outlined in the NEC.
Industrial Components Preventive Maintenance, Enclosures, and Contact Ratings Specifications, publication IC-TD002	Provides a quick reference tool for Allen-Bradley industrial automation controls and assemblies.
Safety Guidelines for the Application, Installation, and Maintenance of Solid-State Control, publication SGI-1.1	Designed to harmonize with NEMA Standards Publication No. ICS 1.1-1987 and provides general guidelines for the application, installation, and maintenance of solid-state control in the form of individual devices or packaged assemblies incorporating solid-state components.
Industrial Automation Wiring and Grounding Guidelines, publication 1770-4.1	Provides general guidelines for installing a Rockwell Automation industrial system.
Product Certifications website, rok.auto/certifications.	Provides declarations of conformity, certificates, and other certification details.

You can view or download publications at rok.auto/literature.

Rockwell Automation Support

Use these resources to access support information.

Technical Support Center	Find help with how-to videos, FAQs, chat, user forums, and product notification updates.	rok.auto/support
Knowledgebase	Access Knowledgebase articles.	rok.auto/knowledgebase
Local Technical Support Phone Numbers	Locate the telephone number for your country.	rok.auto/phonesupport
Literature Library	Find installation instructions, manuals, brochures, and technical data publications.	rok.auto/literature
Product Compatibility and Download Center (PCDC)	Download firmware, associated files (such as AOP, EDS, and DTM), and access product release notes.	rok.auto/pcdc

Documentation Feedback

Your comments help us serve your documentation needs better. If you have any suggestions on how to improve our content, complete the form at rok.auto/docfeedback.

Allen-Bradley, E1 Plus, E300, expanding human possibility, FactoryTalk, and Rockwell Automation are trademarks of Rockwell Automation, Inc.
EtherNet/IP is a trademark of ODVA, Inc.
Trademarks not belonging to Rockwell Automation are property of their respective companies.

Rockwell Automation maintains current product environmental compliance information on its website at rok.auto/pec.

Rockwell Otomasyon Ticaret A.Ş. Kar Plaza İş Merkezi E Blok Kat:6 34752, İçerenköy, İstanbul, Tel: +90 (216) 5698400 EEE Yönetmeliğine Uygundur

Connect with us.

rockwellautomation.com — expanding **human possibility**™

AMERICAS: Rockwell Automation, 1201 South Second Street, Milwaukee, WI 53204-2496 USA, Tel: (1) 414.382.2000, Fax: (1) 414.382.4444
EUROPE/MIDDLE EAST/AFRICA: Rockwell Automation NV, Pegasus Park, De Kleetlaan 12a, 1831 Diegem, Belgium, Tel: (32) 2 663 0600, Fax: (32) 2 663 0640
ASIA PACIFIC: Rockwell Automation, Level 14, Core F, Cyberport 3, 100 Cyberport Road, Hong Kong, Tel: (852) 2887 4788, Fax: (852) 2508 1846

Publication 300-TD003C-EN-P - January 2021
Supersedes Publication 300-TD003B-EN-P - May 2018

Copyright © 2021 Rockwell Automation, Inc. All rights reserved. Printed in the U.S.A.