Installation Instructions

Original Instructions

Allen-Bradley

Analog Laser Sensor

Catalog Numbers 45CPD-8LJB1-D5, 45CPD-8LTB1-D5

IMPORTANT Save these instructions for future use.

Summary of Changes

This manual contains an update to the sensing beam Laser Class. The Laser Class changed from Class 2 to Class 1.

Description

The 45CPD sensor is a Class 1 infrared laser sensor that provides long distance sensing with both analog and discrete outputs. Use the Teach-in buttons on the top of the sensor to install and program several modes (depending on the application): object detection (single or dual output), object position (analog output), object detection (background suppression), or object detection (reflector mode).

This sensor uses the time of flight principle and has a relatively small beam spot for applications typical for this sensing range (up to 6 m [19.7 ft]). The sensor is self-contained in an IP67 enclosure and does not require any external control devices, which add cost and, require additional mounting space.

For convenience purposes, the 45CPD sensor uses a visible red Class 1 laser for alignment purposes during the installation of the sensor in an application. The Class 1 laser is automatically shut down when the sensor is placed in normal operation and the Class 1 "eye safe" laser is used.

The 45CPD sensor is easily installed by mounting the sensor so that the target is within the operating range of the sensor. And be sure to teach in the appropriate setpoints that are required for the application. The sensor can be set with any combination of 1 or 2 discrete PNP outputs and 4...20 mA analog output. The discrete outputs can be set for Light Operate (L.O.) or Dark Operate (D.O.). And the analog output is automatically scaled between the taught setpoints with either a positive or negative slope.

The 45CPD sensor is an excellent solution for long range detection and measurement applications. These applications include:

- Distance measurement
- Verifying material position
- Stack level
- Thickness measurement
- Roll diameter
- Web wind/unwind
- Position fixtures
- Error proof
- Inspection
- Long standoff distance (hot or limited space)
- Level monitoring
- Box width measurement

Specifications

Attribute	45CPD-8LJB1-D5, 45CPD-8LTB1-D5
Sensing Beam	Class 1 laser, IR 905 nm
Alignment Beam	Visible red Class 1 laser, 650 nm
Spot Size	4 x 7 mm @ 2 m (0.16 x 0.27 in. @ 6.56 ft) 4 x 12 mm @ 6 m (0.16 x 0.47 in. @ 19.7 ft)
Sensing Range	0.20…6 m (0.7…19.78 ft)
Linearity	±40 mm (1.57 in.)
Repeatability	Fast/slow: ±15 mm/±10 mm (±0.6 in./±0.4 in.)
Hysteresis	30 mm (1.2 in.) (fixed)
Temperature Drift	1.2 mm/°C
Supply Voltage	18…30V DC
Current Consumption	≤125 mA @ 24V DC
Circuitry Protection	Short circuit, overload, false pulse, transient noise, reverse polarity protection
Output Type	Two discrete PNP (L.O./D.O) Analog Current 4…20 mA
Output Rating	100 mA max. for discrete outputs; 500 Ω max. impedance for analog output
Response Time	Fast/slow: 13 ms/30 ms
Housing Material	Plastic—ABS
Lens Material	PMMA
Status Indicators	Green: Power; Yellow: (2) QA, QB output; Orange: speed mode; Red: (4) Teach-in indication
Connection Types	5-pin DC micro
Supplied Accessories	None
Optional Accessories	Cordsets, mounting bracket
Operating Environment	IP67
Vibration	10…55 Hz, 1.5 mm (0.06 in.) amplitude; 3 planes; meets or exceeds IEC 60947-5-2
Shock	30 g (1.06 oz); 11 ms; meets or exceeds 60947-5-2
Operating Temperature	-20…+50 °C (-4…+122 °F)
Approvals	UL, cULus, and CE Marked for all applicable directives. For use with any listed (CYLV) cable assembly.

Features

- Eye-safe Class 1 laser for operation
- Visible red Class 1laser for set-up
- Six meters sensing range
- Two discrete outputs (PNP) and analog output (4...20 mA)
- Easy set-up with teach-in buttons
- IP67 enclosure
- Self-contained sensor

Read and understand this installation instruction before operating the sensor. Be sure qualified personnel install the 45CPD sensor. The 45CPD sensor is not a safety component as described by the EU machinery directives.

The 45CPD sensor can be mounted such that it is not directed at people (head height) and the beam path is terminated at the end of its functional path. A laser label has been provided for the user to attach to the sensor during installation.

Dimensions

Dimensions are shown in mm (in.)

Figure 1 - Sensor

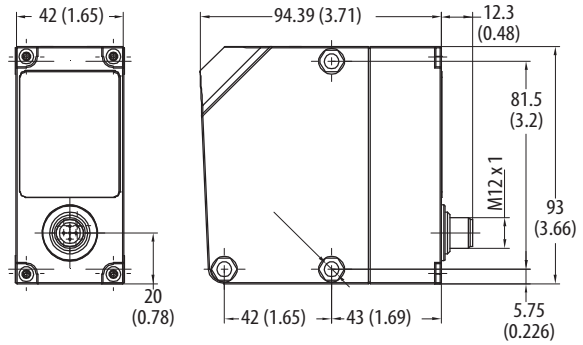

Mounting

Securely mount the sensor on a firm, stable surface, or support for stable operation. A mounting, which is subjected to excessive vibration or movement, can cause intermittent operation. The 45CPD-BKT1 mounting bracket is available for installation convenience. Once securely mounted, the sensor can be wired per the attached wiring diagram.

Figure 2 - 45CPD–BKT1 [mm (in.)]

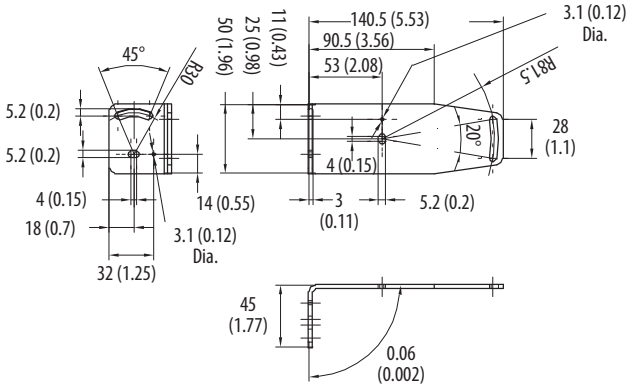

Wiring

The 45CPD sensor is available with a micro quick-disconnect for ease of installation and maintenance. We recommend the use of Bulletin 889 cordsets and patchcords for quick disconnect model sensors. All external wiring conforms to the National Electric Code and all applicable local codes.

Figure 3 - 45CPD-8LTB1-D5(1)

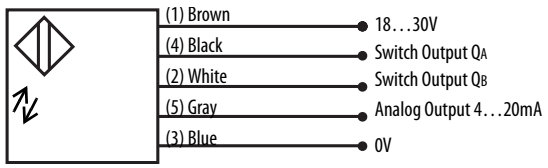

IMPORTANT QA = Discrete PNP Output
#1QB = Discrete PNP Output #2

(1) For 45CPD-8LJB1-D5: (2) White = Analog output 4…20 mA and (5) Gray = Switch output Q_B

Figure 4 - Connection

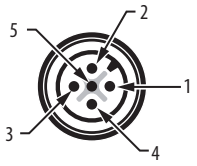

Teach-in Pad and Indicators

Figure 5 - Teach-in

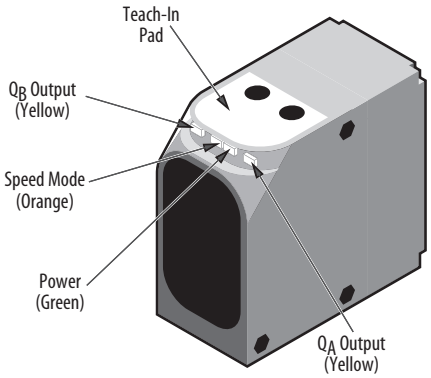

Figure 6 - Teach-in Buttons/Indicators

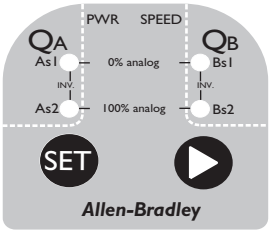

The SET button sets the function that indicates the Teach-In status indicators. To SET, press button for approximately three seconds until status indicator blinks three times.

The ▶ button advances to the next function. After advancing through the entire menu, it will begin at the first function.

Teach-in Indicators

	As1	As2	Bs1	Bs2	Speed
Turn on switchpoint for QA	X				
Turn off switchpoint for QA		X			
Invert Output for QA (L.O./D.O.)	X	X			
Turn on switchpoint for QB			X		
Turn off switchpoint for QB				X	
Invert Output for QB (L.O./D.O.)			X	X	
0% point for Analog Output	X		X		
100% point for Analog Output		X		X	
Speed Mode					X

The discrete and analog output functions can be set in combination (for example, two discrete outputs and the analog output).

General Set Up

Use the push buttons (SET and ▶) and the status indicators on the top of the sensor to install the 45CPD sensor. To begin the Teach-in process,

press the SET button for three seconds. The visible red alignment laser automatically turns on.

Scroll through the Teach-In functions using the ▶ button. After the last function is reached, the menu is started again from the first function. To teach the selected function, which shows the teach-in status indicators as shown in the Teach-in Indicators table, press SET for approximately three seconds. The status indicator blinks three times when complete.

After the desired functions are set, press SET and ▶ simultaneously for approximately one second to exit the Teach-in mode. The sensor begins normal operation mode, which is based on the Teach-in settings. The visible red Class 2 laser turns off and the infrared Class 1 laser turns on.

IMPORTANT To reset the sensor to the factory setting, sensor can be in the operating mode. Press the ▶ button for approximately 15 seconds until the menu status indicators turn on briefly.

IMPORTANT The Speed Mode of the 45CPD sensor can be adjusted for either a Fast or Slow mode of operation. The Fast mode enables faster switching speeds, which have a slightly lower repeatability. The Slow mode has a slower switching frequency with higher repeatability. Selection depends on the requirements in the application. The Speed mode is set by pressing the ▶ button until the Speed indicator (Orange) is blinking fast. To select the slower speed function, press SET and the Speed indicator blinks once per second. To select the higher speed function, press SET and the Speed indicator blinks approximately three times per second. To teach the setting for either slow or fast speed, press SET for approximately three seconds. The four teach-in indicators blink three times when complete. When the sensor is put in operation, the indicator is turned on when running in the Slow mode.

Modes of Operation for Typical Applications

Object Detection—Single Output

To set the output for QA, there is a switch-on point that is indicated by the A_{S1} status indicator. And a switch off point that is indicated by the A_{S2} status indicator.

Figure 7 - Hysteresis Mode

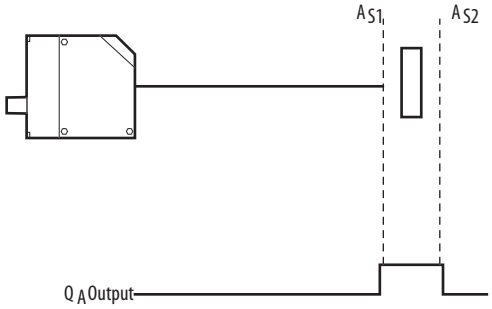

Once in the Teach-In mode, press the ▶ until the A_{S1} indicator turns ON. Position the target at the desired switch-on point and then press the SET button. (If the target is not within the measuring range or cannot be detected the A_{S1} indicator blinks.)

Press the ▶ button to advance to the A_{S2} function; indicated by the teach-in status indicator. Position the target at the desired switch off point and then press the SET button.

If desired, the output can be inverted for this switching window (L.O./D.O. Function). Press ▶ until both the A_{S1} and A_{S2} status indicators are turned ON and then press the SET button. This process also indicates the "INV" text on the teach-in pad.

After this Q_A setting has been completed, press SET and ▶ simultaneously for approximately one second to begin normal operation.

Object Detection—Dual Output

To set the output for both Q_A and Q_B, follow the same teach-in procedure as the Q_A Single Output. Additionally teach the Q_B output with the B_{S1} and B_{S2} status indicators.

Figure 8 - Window Mode

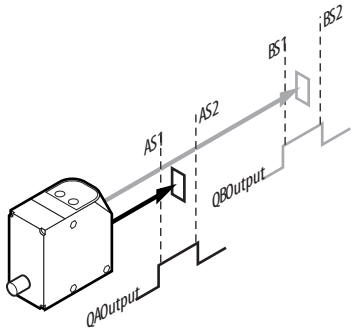

Object Position—Analog Output (4…20mA)

Once in the Teach-in mode, press the ▶ button and advance until both the A_{S1} and B_{S1} function status indicators are turned on. This process also indicates "0% analog" on the teach-in pad.

Position the target at the desired 0% position (4 mA) and then press the SET button. (If the target is not within the measuring range or cannot be detected both A_{S1} and B_{S1} status indicators blink.)

Press the ▶ button and advance until both the A_{S2} and B_{S2} function indicators are turned on. This indicator also shows a "100%" analog position on the teach-in pad.

Position the target at the desired 100% position (20 mA) and then press the SET button. The 4...20 mA analog output is automatically scaled between the 0% and 100% positions, which have been set.

Figure 9 - Analog Output

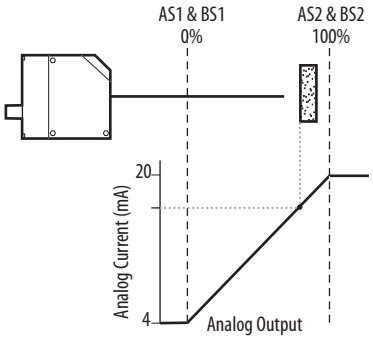

After the settings have been completed successfully, press SET and ▶ simultaneously for approximately one second to begin normal operation.

IMPORTANT	The minimum measuring range for the analog output is 600 mm (23.62 in.). If the setpoints are less than 600 mm apart, the sensor automatically scales the analog output (0…100%) to 600 mm. And the midpoint is automatically set at the midpoint between the two original setpoints.

IMPORTANT	To invert the slope, the 0% position and 100% position settings are reversed and reset. The 0% setting is the "close" setting for a positive slope. For a negative slope, the 0% setting can be the "far" setting. All procedures listed on the publications are using a positive slope context.

Object Detection—Background Suppression

To set the output for Q_A in a background suppression mode, follow the same procedure as in the single output mode. But move the switch on point (A_{S1}) closer to the sensor as shown in the diagram. This change creates a larger switching window. Background targets are suppressed beyond the A_{S2} switch point.

Figure 10 - Background Suppression

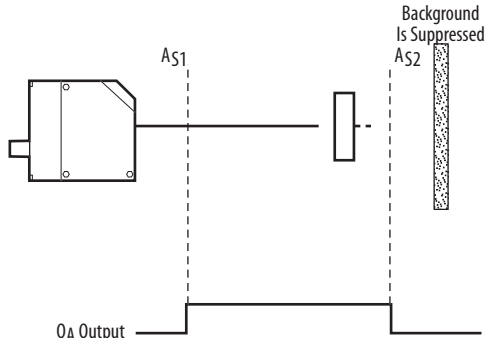

Object Detection—Reflector Mode Using a Background Object as the Reflector

To set the output for Q_A in the reflector mode, follow the same procedure as in the single output mode. Set the A_{S1} and A_{S2} switch points such that the background "reflector" is approximately midway between them as shown in Figure 11. The background object can be a floor, wall, conveyor, and so on.

The output can be configured for Light Operate or Dark Operate by inverting the output. Press ▶ until both the A_{S1} and A_{S2} indicators are turned ON and then press the SET button. This change is shown by "INV" on the teach-in pad.

Figure 11 - Reflector Mode

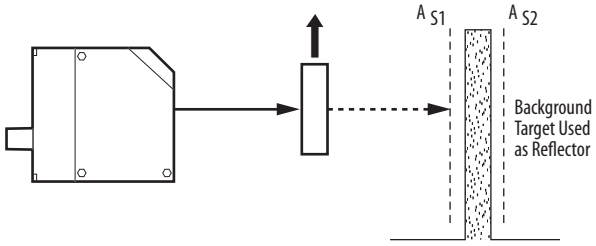

Application Notes

The sensor can be powered for approximately five minutes for maximum precision.

Accessories

Description	Cat. No.
2 m (6.5 ft) micro DC cordset	889D-F5AC-2
Mounting bracket	45CPD-BKT1

Rockwell Automation Support

For technical support, visit http://www.rockwellautomation.com/support/overview.page.

Rockwell Automation maintains current product environmental information on its website at http://www.rockwellautomation.com/rockwellautomation/about-us/sustainability-ethics/product-environmental-compliance.page.

Allen-Bradley, Rockwell Automation, and Rockwell Software are trademarks of Rockwell Automation, Inc.
Trademarks not belonging to Rockwell Automation are property of their respective companies.

Rockwell Otomasyon Ticaret A.Ş., Kar Plaza İş Merkezi E Blok Kat:6 34752 İçerenköy, İstanbul, Tel: +90 (216) 5698400

www.rockwellautomation.com

Power, Control and Information Solutions Headquarters

Americas: Rockwell Automation, 1201 South Second Street, Milwaukee, WI 53204-2496 USA, Tel: (1) 414.382.2000, Fax: (1) 414.382.4444
Europe/Middle East/Africa: Rockwell Automation NV, Pegasus Park, De Kleetlaan 12a, 1831 Diegem, Belgium, Tel: (32) 2 663 0600, Fax: (32) 2 663 0640
Asia Pacific: Rockwell Automation, Level 14, Core F, Cyberport 3, 100 Cyberport Road, Hong Kong, Tel: (852) 2887 4788, Fax: (852) 2508 1846

Publication 45CPD-IN001B-EN-P - May 2017
Supersedes Publication 45CPD-IN001A-EN-P - April 2008

75009-268-01 Ver 04
Copyright © 2017 Rockwell Automation, Inc. All rights reserved. Printed in the U.S.A.