Selection Guide

Allen-Bradley

I/O Wiring Conversion Systems

PLC-5 1771 to ControlLogix 1756

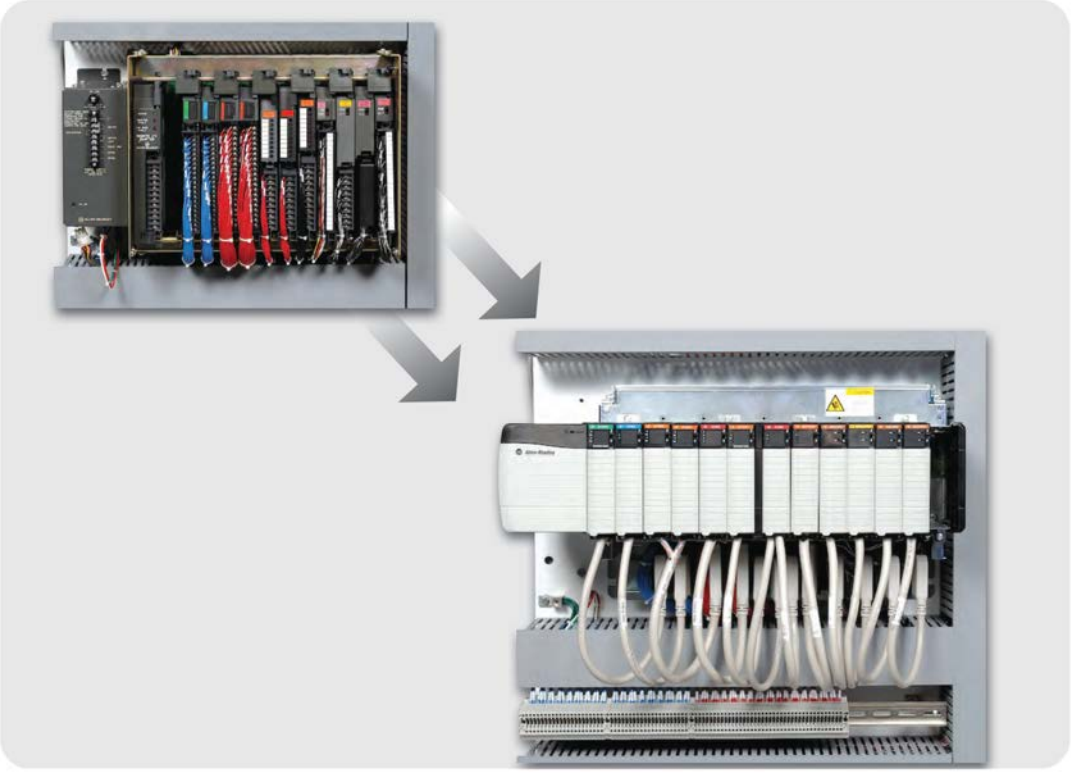

LISTEN.
THINK.
SOLVE.®

Allen-Bradley • Rockwell Software

Rockwell Automation

What's Inside

Topic	Page
Product Selection	3
Approximate Dimensions	11
Wiring Diagrams - Digital Inputs	19
Wiring Diagrams - Digital Outputs	47
Wiring Diagrams - Analog Inputs and Outputs	77
Wiring Diagrams - High Resolution Isolated Analog	103

Summary of Changes

This publication contains new and updated information as indicated in the following table.

Topic	Page
Analog Inputs and Outputs Product Selection - added new options for 1771-IL, 1771-OFE1 and 1771-OFE2 conversions	7
1771-N High Resolution Isolated Analog I/O Modules - New conversion options in standard and combination	8

1771 I/O to 1756 I/O Conversion Modules

I/O Conversion Modules provide a fast and efficient method for converting 1771 PLC-5 I/O to 1756 ControlLogix I/O. The I/O conversion is accomplished without removing any field wires from the existing swing arm, virtually removing the risk of wiring errors. The existing swing arms fit directly onto the edge connector of the conversion modules.

The cables are pre-wired and have a connector for the conversion module on one end and a removable terminal block (RTB) on the other end. The I/O signals are routed through the conversion module and the cable to the appropriate terminals on the I/O module.

The I/O Conversion System includes:

- Conversion Modules (Ex: Cat No: 1492-CM1771-LD001)
- Cables (Ex: Cat No: 1492-CONACAB005X)
- Conversion Mounting Assembly (Ex: Cat No: 1492-MUA4-A13-A17)

Conversion Modules, Cables, and Mounting Assemblies

Conversion Modules

Pre-wired Cables, 25-pin

Pre-wired Cables, 37-pin

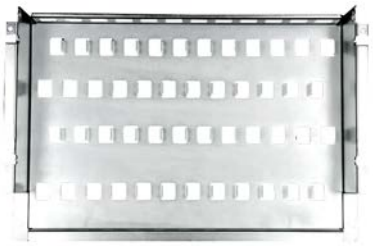

Base Plate

The Conversion Modules are housed in a Conversion Mounting Assembly Base Plate. This base plate has the same footprint and mounting holes as the 1771 chassis. There is no need to drill and tap new mounting holes in the control cabinet.

Cover Plate

The Conversion Mounting Assembly Cover Plate covers and helps protect the Conversion Modules while providing a place to mount the new 1756 chassis. The Cover Plate has pre-drilled and tapped mounting holes allowing the new 1756 chassis to be mounted in several locations – centered, right-justified or left-justified. There is no need to drill and tap new mounting holes in the control cabinet.

Conversion Mounting Assembly Selection

Conversion Modules must be installed in a 1492 Conversion Mounting Assembly (see table below, a complete System Installation Manual is included with each assembly. Use the following steps to select the proper conversion mounting assembly:

1. Determine the quantity of each type of 1771 I/O modules used in the I/O chassis to be converted.
2. From the table below:
   a. Select the applicable 1492 conversion modules
   b. Review the Max Slots for I/O and Chassis Width data from the table below
   c. Select a 1756 I/O chassis which has enough I/O slots. Two I/O slots are required in the 1756 chassis for conversions where one 1771 I/O module converts to two 1756 I/O modules.
   d. Select the conversion mounting assembly which has enough conversion module slots.
   (2) conversion module slots are required in the conversion mounting assembly for conversions where (2) 1771 I/O modules convert to (1) 1756 I/O modules.

The combined depth of the conversion mounting assembly with the 1756 chassis mounted on top is 10.25 inches (controller w/key) or 10.0 inches (controller w/o key). Dimension drawings are included in the System Installation Manual that ships with the Assembly.

Chassis Dimensions and Max Slot Information

1771 Chassis				1756 Chassis			Conversion Mounting Assembly		
		Chassis Width[2] in (mm)							
Cat. No.	Max Slots for I/O	Without Power Supply	With Power Supply	Cat. No.	Max Slots for I/O	Chassis Width in (mm)	Cat. No.	Max Slots for Conversion Modules	Chassis Width in (mm)
1771-A1B	4	9.01 (229)	12.61 (320)	1756-A4	3	10.35 (263)	1492-MUA1B-A4-A7	4	9.01 (229)
				1756-A7	6	14.49 (368)			
1771-A2B	8	14.01 (356)	17.61 (447)	1756-A7	6	14.49 (368)	1492-MUA2B-A7-A10	8	14.01 (356)
				1756-A10	9	19.02 (483)			
1771-A3B1[1]	12	19.01 (483)		1756-A10	9	19.02 (483)	1492-MUA3B-A10-A13	12	19.01 (483)
				1756-A13	12	23.15 (588)			
1771-A4B	16	24.01 (610)		1756-A13	12	23.15 (588)	1492-MUA4-A13-A17	16	24.01 (610)
				1756-A17	16	29.06 (738)			

(1) 1771-A3B is not listed as it is used for 19 inch wide instrumentation panels.

(2) Notice that the 1756 Chassis Width sometimes exceeds the 1771 Chassis Width, with or without the Power Supply. The Cover-Plate of the 1492 Conversion Mounting Assembly allows the 1756 Chassis to be Left justified, Right justified or Centered. A complete System Installation Manual ships with the 1492 Conversion Mounting Assembly.

Digital Inputs

1. Column 1: find the Catalog Number of the **1771 Module** you are converting from.
2. Column 2: find the Catalog Number of the compatible **1756 Module** you are converting to. In some cases more than one module exists. Review the matrix carefully and review the I/O module Installation Manuals to determine full compatibility.
3. Column 3: find the **Conversion Module** catalog number and order quantity.
4. Column 4: find the **Conversion Cable** catalog number and order quantity.

1		2		3		4		5
Converting From 1771 Module(1)	Qty.	Converting to 1756 Module	Qty.	Conversion Module		Conversion Cable(3)		Wiring Diagram
				Cat. No.	Order	Cat. No.	Order	Page
1771-IA	2	1756-IA16	1	1492-CM1771-LD007	2	1492-C005005XE	1	19
1771-IA2	2	1756-IA16	1	1492-CM1771-LD007	2	1492-C005005XE	1	19
1771-IAD	1	1756-IA16	1	1492-CM1771-LD001	1	1492-CONCAB005X	1	20
1771-IAD	1	1756-IH16I	1	1492-CM1771-LD002	1	1492-CONCAB005Y	1	21
1771-IAN	1	1756-IA32	1	1492-CM1771-LD003	1	1492-CONCAB005Z	1	22
1771-IB	2	1756-IB16	1	1492-CM1771-LD007	2	1492-C005005XE	1	23
1771-IBD	1	1756-IB16	1	1492-CM1771-LD001	1	1492-CONCAB005X	1	24
1771-IBN	1	1756-IB32	1	1492-CM1771-LD003	1	1492-CONCAB005Z	1	25
1771-IC	2	1756-IC16	1	1492-CM1771-LD007	2	1492-C005005XE	1	26
1771-ICD	1	1756-IC16	1	1492-CM1771-LD001	1	1492-CONCAB005X	1	27
1771-ID	2	1756-IA16I	1	1492-CM1771-LD012	2	1492-C005005XL	1	28
1771-ID01	2	1756-IM16I	1	1492-CM1771-LD012	2	1492-C005005XL	1	29
1771-ID16	1	1756-IA16I	1	1492-CM1771-LD004	1	1492-CONCAB005Y	1	30
1771-ID16	1	1756-IH16I	1	1492-CM1771-LD004	1	1492-CONCAB005Y	1	31
1771-IG	2	1756-IG16	1	1492-CM1771-LA003(2)	2	1492-C005005XS	1	32
1771-IGD	1	1756-IG16	1	1492-CM1771-LD006	1	1492-CONCAB005X	1	33
1771-IH	2	1756-IC16	1	1492-CM1771-LD007	2	1492-C005005XE	1	34
1771-IM	2	1756-IM16I	1	1492-CM1771-LD007	2	1492-C005005XH	1	35
1771-IMD	1	1756-IM16I	1	1492-CM1771-LD002	1	1492-CONCAB005Y	1	36
1771-IN	2	1756-IN16	1	1492-CM1771-LD007	2	1492-C005005XE	1	37
1771-IND	1	1756-IN16	1	1492-CM1771-LD001	1	1492-CONCAB005X	1	38
1771-IND1	1	1756-IN16	1	1492-CM1771-LD001	1	1492-CONCAB005X	1	39
1771-IQ	2	1756-IB16I	1	1492-CM1771-LD007	2	1492-C005005XK	1	40
1771-IQ	2	1756-IB16I	1	1492-CM1771-LD014	2	1492-C005005XJ	1	41
1771-IQ16	1	1756-IB16I	1	1492-CM1771-LD004	1	1492-CONCAB005Y	1	42
1771-IT	2	1756-IB16	1	1492-CM1771-LD007	2	1492-C005005XE	1	43
1771-IV	2	1756-IV16	1	1492-CM1771-LD014	2	1492-C005005XG	1	44
1771-IVN	1	1756-IV32	1	1492-CM1771-LD005	1	1492-CONCAB005Z	1	45

(1) To understand any issues concerning I/O module compatibility refer to the conversion module wiring diagrams and the Installation Manuals for the specific I/O modules involved (with particular attention to the specification and wiring instructions).

(2) These 1771 Digital I/O Modules use a Swing Arm that only mounts to these Analog I/O Conversion Modules, which will therefore be used to provide for these 1771 Digital I/O conversions.

(3) The 005 in the Cat. No. indicates cable length of the 1492 cable. The recommended length of 0.5 M is listed, additional lengths are listed below.

1.0M Cable = 1492-CONCAB010_, 1.0M/1.0M Cable= 1492-C010010X_,0.5M/1.0M Cable = 1492-C005010X_,1.0M/0.5M Cable = 1492-C010005X_

Digital Outputs

1. Column 1: find the catalog number of the **1771Module** you are converting from.
2. Column 2: find the catalog number of the compatible **1756 Module** you are converting to.
   In some cases more than one module exists. Review the matrix carefully and review the I/O module Installation Manuals to determine full compatibility.
3. Column 3: find the catalog number of the **Conversion Module**.
4. Column 4: find the catalog number of the **Conversion Cable.**

1		2		3		4		5
Converting from 1771 Module(1)		Converting to 1756 Module		Conversion Module		Conversion Cable(4)		Wiring Diagram
Cat. No.	Qty.	Cat. No.	Qty.(2)	Cat. No. (3)	Order Qty.	Cat. No.	Order Qty.	Page
1771-OA	1	1756-OA8E	1	1492-CM1771-LD014	1	1492-CONCAB005U	1	47
1771-OAD	1	1756-OA16	1	1492-CM1771-LD006	1	1492-CONCAB005X	1	48
1771-OAN	1	1756-OA16	2	1492-CM1771-LD013	1	1492-CONCAB005S3	1	49
1771-OB	2	1756-OB16D	1	1492-CM1771-LD014	2	1492-C005005XF	1	50
1771-OBD	1	1756-OB16E	1	1492-CM1771-LD006	1	1492-CONCAB005X	1	51
1771-OBD	1	1756-OC8	2	1492-CM1771-LD008F	1	1492-CONCAB005S1	1	52
1771-OBDS	1	1756-OB16E	1	1492-CM1771-LD006	1	1492-CONCAB005X	1	53
1771-OBN	1	1756-OB32	1	1492-CM1771-LD009F	1	1492-CONCAB005Z	1	54
1771-OC	1	1756-OC8	1	1492-CM1771-LD014	1	1492-CONCAB005V	1	55
1771-OD	2	1756-OA16I	1	1492-CM1771-LD012	2	1492-C005005XM	1	56
1771-OD16	1	1756-OA16I	1	1492-CM1771-LD010F	1	1492-CONCAB005Y	1	57
1771-ODD	1	1756-OA16I	1	1492-CM1771-LD010F	1	1492-CONCAB005Y	1	58
1771-ODZ	2	1756-OA16I	1	1492-CM1771-LD012	2	1492-C005005XP	1	59
1771-OG	2	1756-OG16	2	1492-CM1771-LA003	2	1492-C005005XS	1	60
1771-OGD	1	1756-OG16	2	1492-CM1771-LD006	1	1492-CONCAB005X	1	61
1771-OM	2	1756-OA16	1	1492-CM1771-LD014	2	1492-C005005XG	1	62
1771-OMD	1	1756-OA16	1	1492-CM1771-LD006	1	1492-CONCAB005X	1	63
1771-ON	1	1756-ON8	1	1492-CM1771-LD014	1	1492-CONCAB005W	1	64
1771-OND	1	1756-ON8	2	1492-CM1771-LD006	1	1492-CONCAB005S2	1	65
1771-OQ	2	1756-OB16I	1	1492-CM1771-LA004	2	1492-C005005XT	1	66
1771-OQ16	1	1756-OB16I	1	1492-CM1771-LD010F	1	1492-CONCAB005Y	1	67
1771-OR	2	1756-OA16I	1	1492-CM1771-LD012	2	1492-C005005XR	1	68
1771-OVN	1	1756-OV16E	2	1492-CM1771-LD013	1	1492-CONCAB005S3	1	69
1771-OW	1	1756-OX8I	1	1492-CM1771-LD012	1	1492-CONCAB005Y	1	70
1771-OW16	1	1756-OW16I	1	1492-CM1771-LD011	1	1492-CONCAB005Y	1	71
1771-OWNA	1	1756-OW16I	2	1492-CM1771-LD013	1	1492-CONCAB005S4	1	72
1771-OY	1	1756-OX8I	1	1492-CM1771-LD012	1	1492-CONCAB005Y	1	73
1771-OYL	1	1756-OX8I	1	1492-CM1771-LD012	1	1492-CONCAB005Y	1	74
1771-OZ	1	1756-OX8I	1	1492-CM1771-LD012	1	1492-CONCAB005Y	1	75
1771-OZL	1	1756-OX8I	1	1492-CM1771-LD012	1	1492-CONCAB005Y	1	76

(1) To understand any issues concerning I/O module compatibility refer to the conversion module wiring diagrams and the Installation Manuals for the specific I/O modules involved (with particular attention to the specification and wiring instructions).

(2) Where two is indicated, these modules need to be located directly next to each other in the 1756 chassis.

(3) An "F" at the end of the 1756 catalog number indicates that it is fused to match the functionality of the 1771 module being replaced.

(4) The 005 in the Cat. No. indicates cable length of the 1492 cable. The recommended length of 0.5 M is listed, additional lengths are listed below.

1.0M Cable = 1492-CONCAB010_, 1.0M/1.0M Cable= 1492-C010010X_0.5M/1.0M Cable = 1492-C005010X_, 1.0M/0.5M Cable = 1492-C010005X_

Analog Inputs and Outputs

1. Column 1: find the catalog number of the **1771Module** you are converting from.
2. Column 2: find the catalog number of the compatible **1756 Module** you are converting to.
   In some cases more than one module exists. Review the matrix carefully and review the I/O module Installation Manuals to determine full compatibility.
3. Column 3: find the catalog number of the **Conversion Module**.
4. Column 4: find the catalog number of the **Conversion Cable.**

1		2			3		4		5
Converting from 1771 Module		**Converting to 1756 Module**			**Conversion Module**		**Conversion Cable**		**Wiring Diagram**
Cat. No.	**Qty.**	**Cat. No.**	**Description**	**Qty.**	**Cat. No.**	**Order Qty.**	**Cat. No.**	**Order Qty.**	**Page**
1771-IFE	1	1756-IF16	Differential Current	1	1492-CM1771-LA002	1	1492-CONACAB005D	1	77
			Differential Voltage	1	1492-CM1771-LA002	1	1492-CONACAB005C	1	78
			Single End Current	1	1492-CM1771-LA001	1	1492-CONACAB005B	1	79
			Single End Voltage	1	1492-CM1771-LA001	1	1492-CONACAB005A	1	80
1771-IFF	1	1756-IF16	Differential Current	1	1492-CM1771-LA002	1	1492-CONACAB005D	1	81
			Differential Voltage	1	1492-CM1771-LA002	1	1492-CONACAB005C	1	82
			Single End Current	1	1492-CM1771-LA001	1	1492-CONACAB005B	1	83
			Single End Voltage	1	1492-CM1771-LA001	1	1492-CONACAB005A	1	84
1771-IL	1	1756-IF8I	Current	1	1492-CM1771-LA004	1	1492-CONACAB005K8	1	85
			Voltage	1	1492-CM1771-LA004	1	1492-CONACAB005L8	1	86
		1756-IF6I (6-ch)	Current	1	1492-CM1771-LA004	1	1492-CONACAB005K	1	87
			Voltage	1	1492-CM1771-LA004	1	1492-CONACAB005L	1	88
		1756-IF6I (2x 4-ch)	Current	2	1492-CM1771-LA004	1	1492-CONACAB005T1	1	89
			Voltage	2	1492-CM1771-LA004	1	1492-CONACAB005T2	1	90
1771-IR	1	1756-IRT8I	RTD	1	1492-CM1771-LA004	1	1492-CONACAB005F8	1	91
		1756-IR6I	RTD	1	1492-CM1771-LA004	1	1492-CONACAB005F	1	92
1771-IXE	1	1756-IT6I2	Thermocouple	1	1492-CM1771-LA005	1	1492-CONACAB005G	1	93
		1756-IRT8I	Thermocouple	1	1492-CM1771-LA005	1	1492-CONACAB005G8	1	94
1771-IXHR	1	1756-IT6I2	Thermocouple	1	1492-CM1771-LA005	1	1492-CONACAB005G	1	95
		1756-IRT8I	Thermocouple	1	1492-CM1771-LA005	1	1492-CONACAB005G8	1	96
1771-OFE1	1	1756-OF6VI	Voltage	1	1492-CM1771-LA003	1	1492-CONACAB005E	1	97
	1	1756-OF8I	Voltage	1	1492-CM1771-LA003	1	1492-CONACAB005E8V	1	98
	2	1756-OF8I	Voltage	1	1492-CM1771-LA003	2	1492-C005005E8V	1	99
1771-OFE2	1	1756-OF6CI	Current	1	1492-CM1771-LA003	1	1492-CONACAB005E	1	100
	1	1756-OF8I	Current	1	1492-CM1771-LA003	1	1492-CONACAB005E8C	1	101
	2	1756-OF8I	Current	1	1492-CM1771-LA003	2	1492-C005005E8C	1	102

1771-N High Resolution Isolated Analog I/O Modules

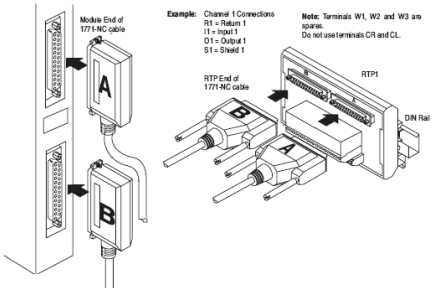

The 1771-N High Resolution Analog I/O modules are designed for use with 1771-RTPs (Remote Termination Panels) and connected by a 6 or 15 foot cable (Cat. No. 1771-NC6 or 1771-NC15). The conversion of the 1771-N Series I/O to a 1756 ControlLogix I/O can be accomplished without the removal of any field wires from the existing 1771-RTPs.

Simply replace the (2) existing 1771 cables with (2) of the following cables in the table below. Each of these cables has a connector on one end that attaches directly to the existing 1771-RTP and a 1756 RTB (Removable Terminal Block) on the other end for connection to the ControlLogix I/O module.

Use the following steps to select the proper conversion cables:

1. Column 2: find the catalog number of the 1771 Digital I/O module.
2. In column 3, find the catalog number of the compatible 1756 Digital I/O module. In some cases more than one module is required. Review the matrix and the I/O module installation manuals to determine full compatibility
3. In column 4, find the catalog numbers and descriptions of the appropriate cables.

1	2		3		4			5
I/O Description	Convert From:		Convert To:		Cable Description	Conversion Cable Catalog Number		Wiring Diagram Page
	1771 Module	Qty.	1756 Module	Qty.		Cable "A"	Cable "B"	
Standard 1771-N High Resolution I/O	1771-NOC	1	1756-OF8I	1	Current (8 Ch)	1492-CONACAB020N88		103
		1	1756-OF8	1	Current (8 CH)	1492-CONACAB020N8		104
		1	1756-OF6CI	2	Current (4/4 CH)	1492-CONACAB020N1	1492-CONACAB020N1	105
	1771-NIS	1	1756-IF8I	1	Current (8 CH)	1492-CONACAB020N38		106
		1	1756-IF6CIS	2	Current (4/4 CH)	1492-CONACAB020N2	1492-CONACAB020N2	107
	1771-NIV	1	1756-IF8I	1	Current (8 CH)	1492-CONACAB020N38		108
		1	1756-IF6I	2	Current (4/4 CH)	1492-CONACAB020N3	1492-CONACAB020N3	109
		1	1756-IF8I	1	Voltage (8 CH)	1492-CONACAB020N78		110
		1	1756-IF6I	2	Voltage (4/4 CH)	1492-CONACAB020N7	1492-CONACAB020N7	111
		1	1756-IF6I	2	Current (A - 4 CH) / Voltage (B - 4 CH)	1492-CONACAB020N3	1492-CONACAB020N7	112
		1	1756-IF6I	2	Voltage (A - 4 CH) / Current (B - 4 CH)	1492-CONACAB020N7	1492-CONACAB020N3	113
	1771-NR	1	1756-IRT8I	1	RTD (8 CH)	1492-CONACAB020N48		114
		1	1756-IR6I	2	RTD (4/4 CH)	1492-CONACAB020N4	1492-CONACAB020N4	115
	1771-NT1	1	1756-IRT8I	1	Thermocouple (8 CH)	1492-CONACAB020N68		116
		1	1756-IT6I	2	Thermocouple (4/4 CH)	1492-CONACAB020N5	1492-CONACAB020N5	117
	1771-NOV	1	1756-OF8I	1	Voltage (8 CH)	1492-CONACAB020N18		118
		1	1756-OF6VI	2	Voltage (4/4 CH)	1492-CONACAB020N5	1492-CONACAB020N1	119
	1771-NIV1	1	1756-IF8I	1	Voltage (8 CH)	1492-CONACAB020N78		120
		1	1756-IF6I	2	Voltage (4/4 CH)	1492-CONACAB020N7	1492-CONACAB020N7	121
	1771-NT2	1	1756-IRT8I	1	Thermocouple (8 CH)	1492-CONACAB020N68		122
		1	1756-IT6I2	2	Thermocouple (4/4 CH)	1492-CONACAB020N6	1492-CONACAB020N6	123

1	2		3		4			5
I/O Description	Convert From:		Convert To:		Cable Description	Conversion Cable Catalog Number		Wiring Diagram Page
	1771 Module	Qty.	1756 Module	Qty.		Cable "A"	Cable "B"	
Combination 1771-N High Resolution I/O	1771-NIVR	1	1756-IRT8I	1	RTD (4 CH)	-	1492-CONACAB020N44	124
			1756-IF8I		Voltage (4 CH)	1492-CONACAB020N74	-	
			1756-IR6I		RTD (4 CH)	-	1492-CONACAB020N4	125
			1756-IF6I		Voltage (4 CH)	1492-CONACAB020N7	-	
			1756-IRT8I		RTD (4 CH)	-	1492-CONACAB020N44	126
			1756-IF8I		Current (4 CH)	1492-CONACAB020N34	-	
			1756-IR6I		RTD (4 CH)	-	1492-CONACAB020N4	127
			1756-IF6I		Current (4 CH)	1492-CONACAB020N3	-	
	1771-NIVT		1756-IRT8I		Thermocouple (4 CH)	-	1492-CONACAB020N54	128
			1756-IF8I		Voltage (4 CH)	1492-CONACAB020N74	-	
			1756-IT6I		Thermocouple (4 CH)	-	1492-CONACAB020N5	129
			1756-IF6I		Voltage (4 CH)	1492-CONACAB020N7	-	
			1756-IRT8I		Thermocouple (4 CH)	-	1492-CONACAB020N54	130
			1756-IF8I		Current (4 CH)	1492-CONACAB020N34	-	
			1756-IT6I		Thermocouple (4 CH)	-	1492-CONACAB020N5	131
			1756-IF6I		Current (4 CH)	1492-CONACAB020N3	-	

Specifications

Attribute		Value
Dimensions (H x D x W)		300 x 111.25 x 38.1 mm (11.81 x 4.38 x 1.5 in.)
Approximate Shipping Weight		260g (0.57 lb)
Storage Temperature		Storage Temperature -40...+85 °C (-40...+185 °F)
Operating Temperature		Operating Temperature 0...+60 °C (+32...+140 °F)
Operating Humidity		Operating Humidity 5...95% at +55 °C (+131 °F)
Shock	Nonoperating	50 g
	Operating	30 g
Operational Vibration		2 g at 10...500 Hz
Agency Certifications		UL Classified (UL File No. E113724)
CE Certifications		Compliant for all applicable directives
Pollution Degree		2
Environmental Rating		IP20

Notes:

Dimensions are in. (mm).

Cat No. MUA1B-A4-A7 used with Cat No. 1756-A4

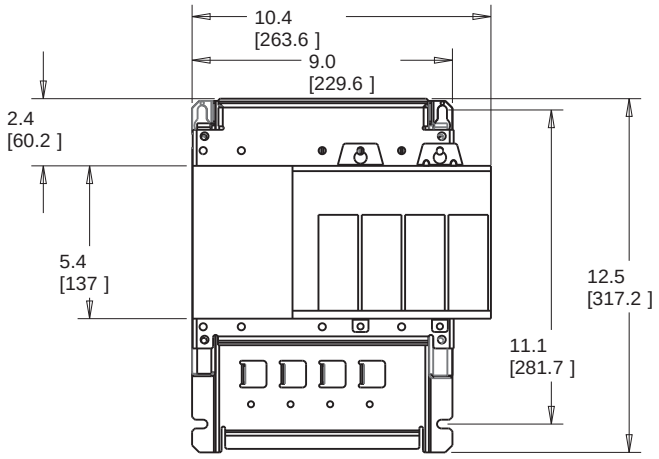

Left Justified

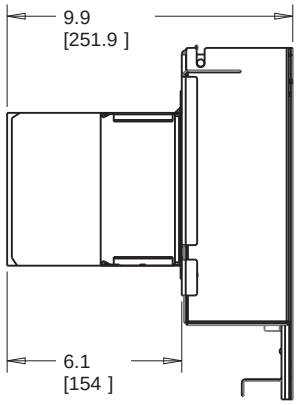

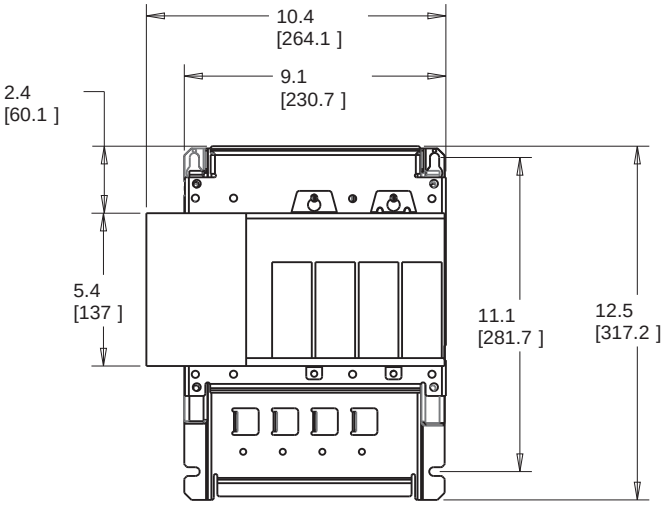

Right Justified

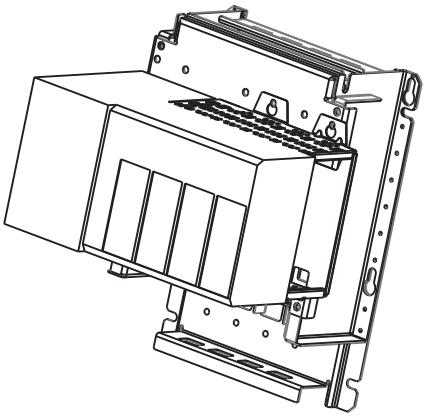

Cat No. MUA1B-A4-A7 used with Cat No. 1756-A7

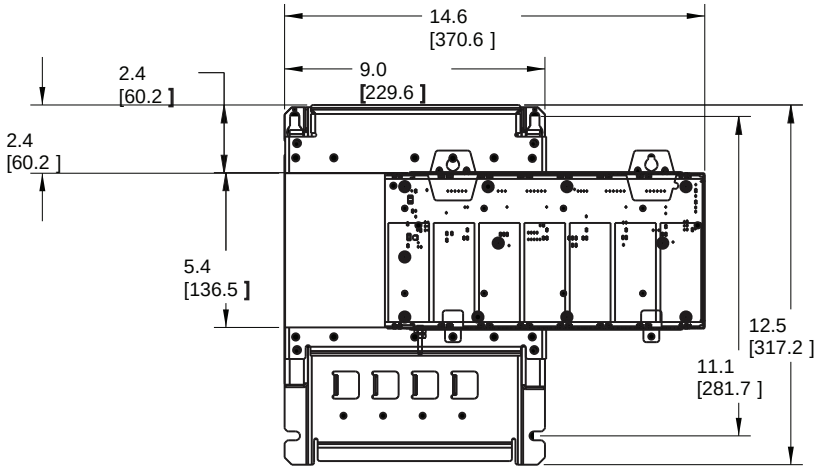

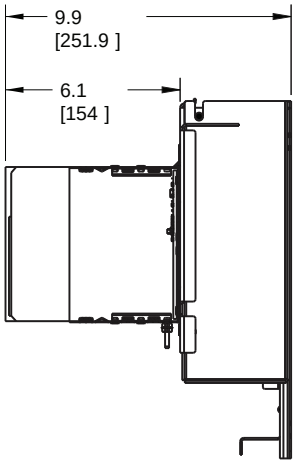

Left Justified

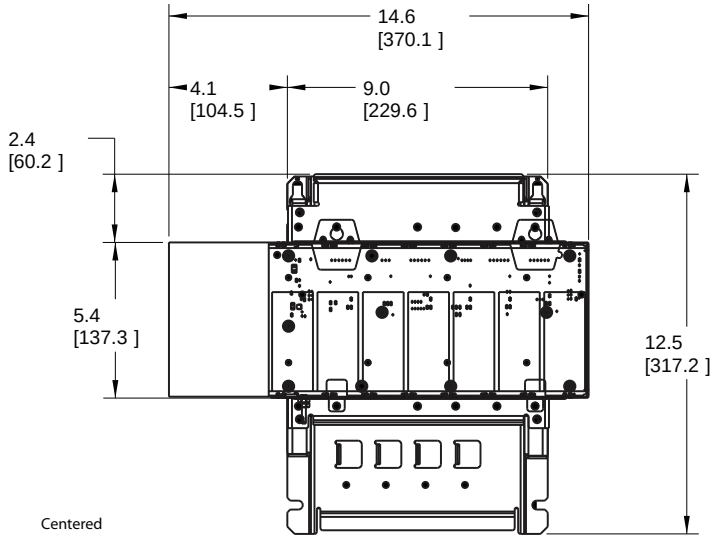

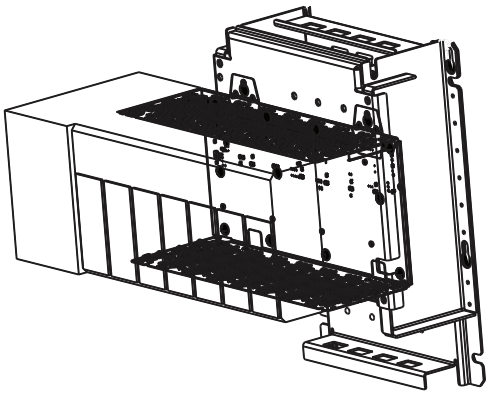

Centered

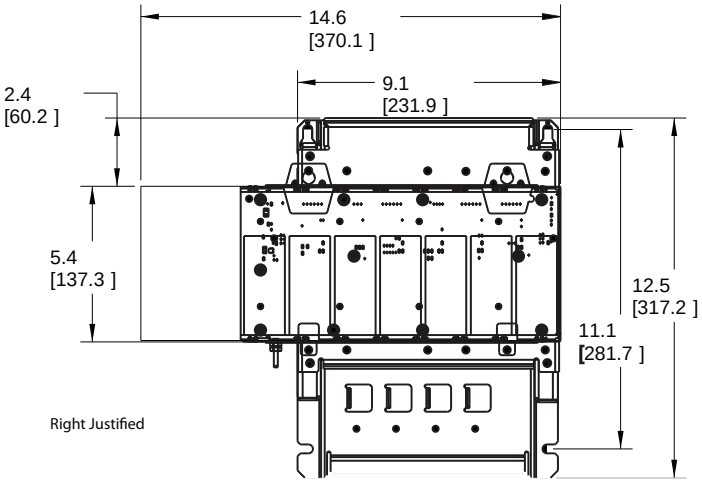

Right Justified

Cat No. MUA2B-A7-A10 used with Cat No. 1756-A7

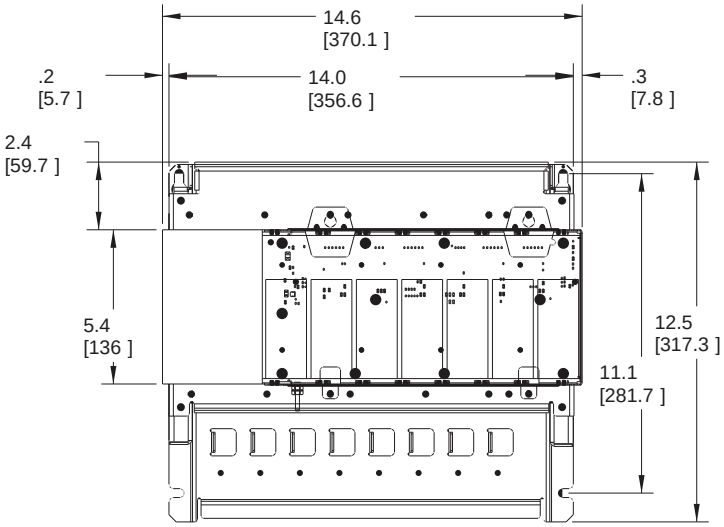

Centered

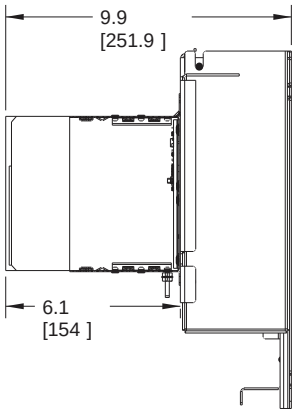

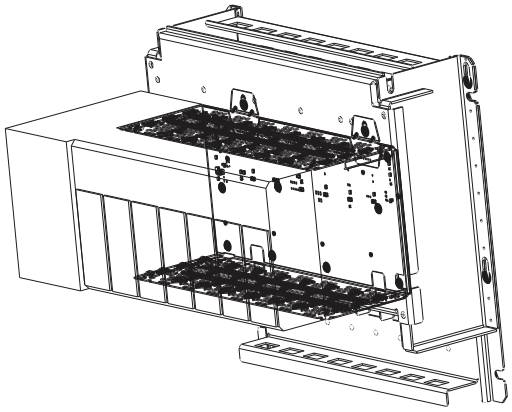

Cat No. MUA3-A10-A13 used with Cat No. 1756-A10

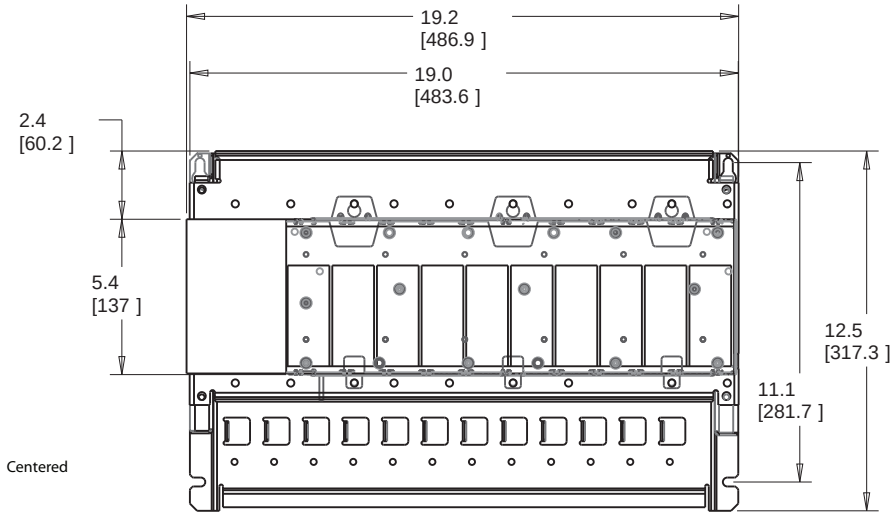

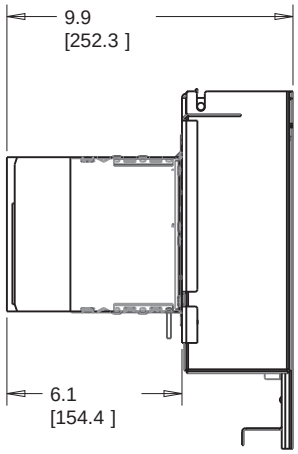

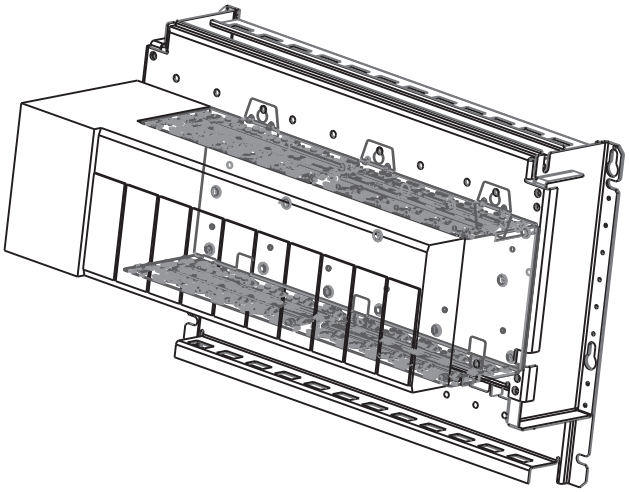

Cat No. MUA3-A10-A13 used with Cat No. 1756-A13

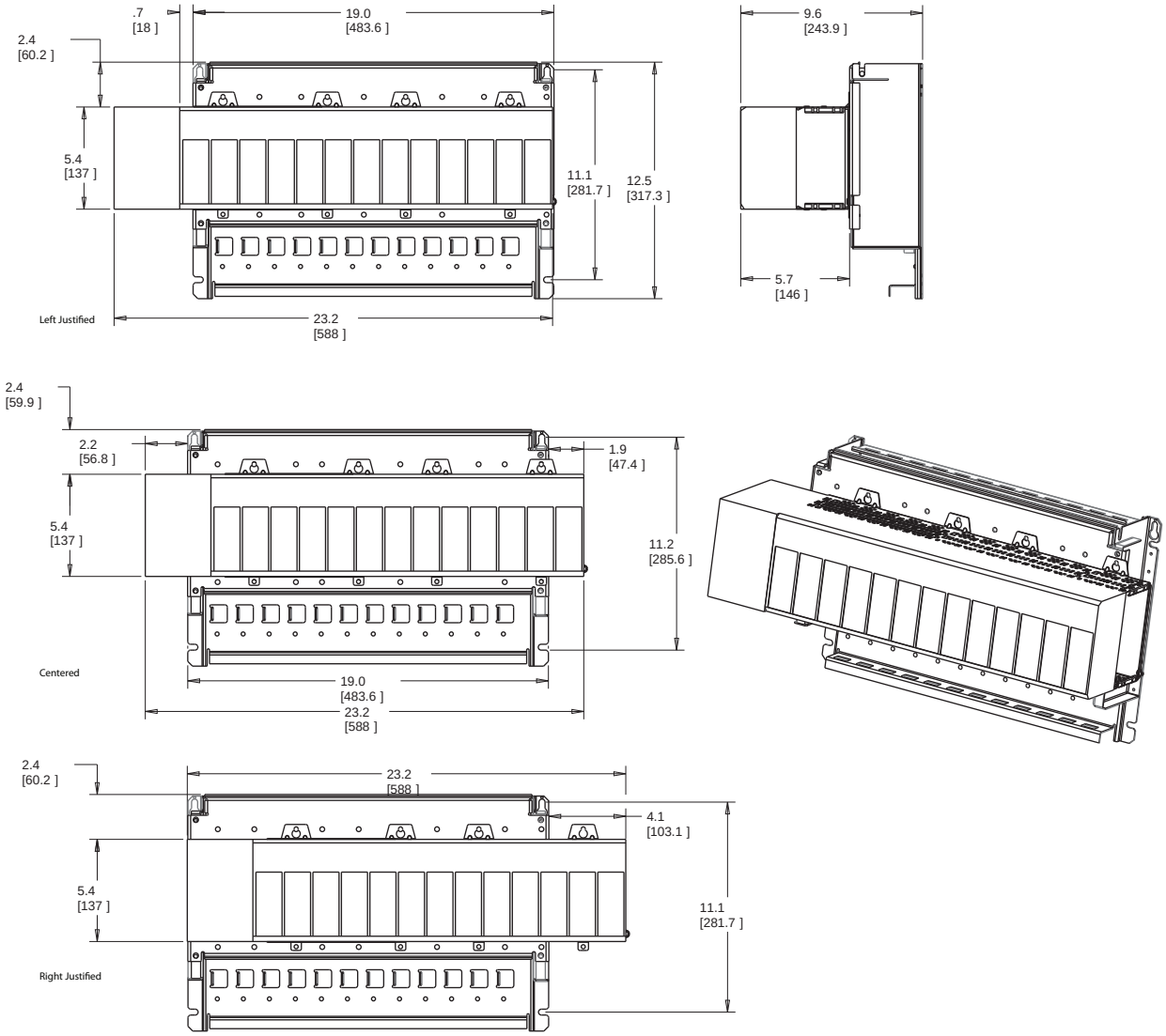

Cat No. MUA4-A13-A17 used with Cat No. 1756-A13

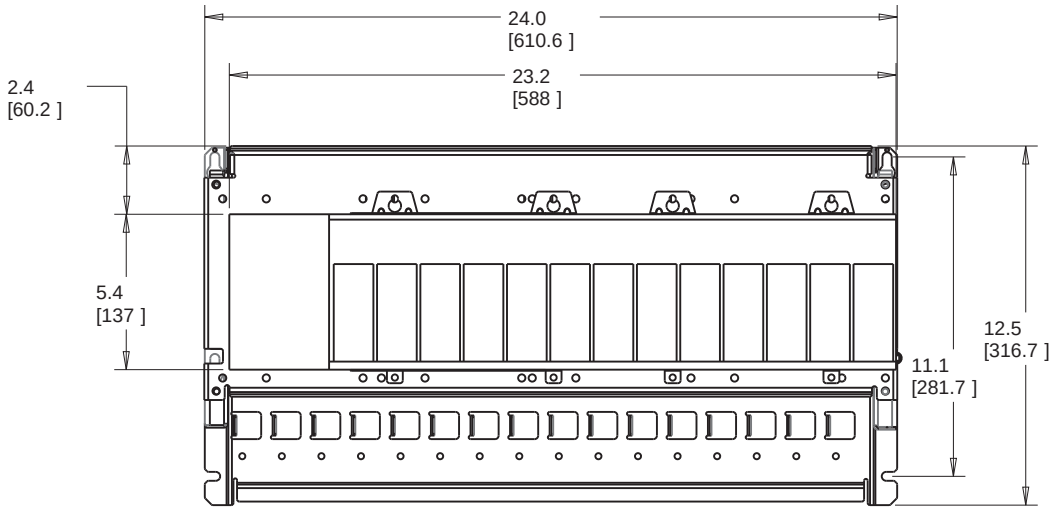

Centered

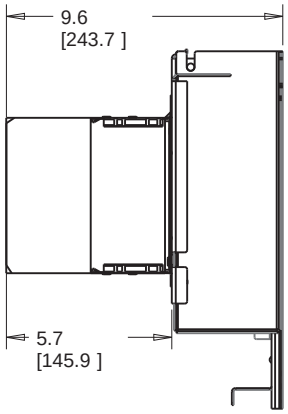

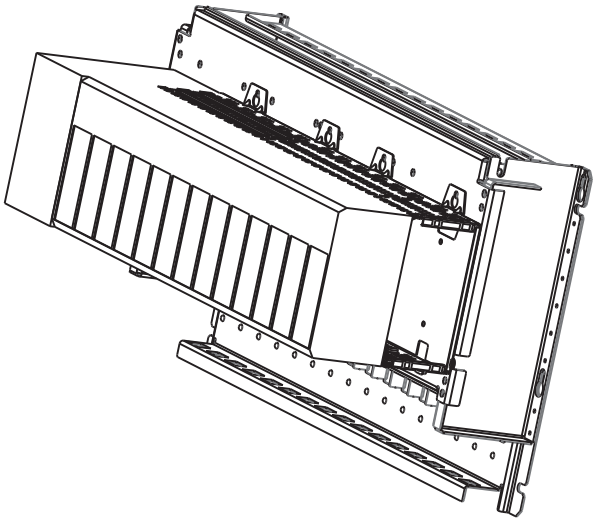

Cat No. MUA4-A13-A17 used with Cat No. 1756-A17

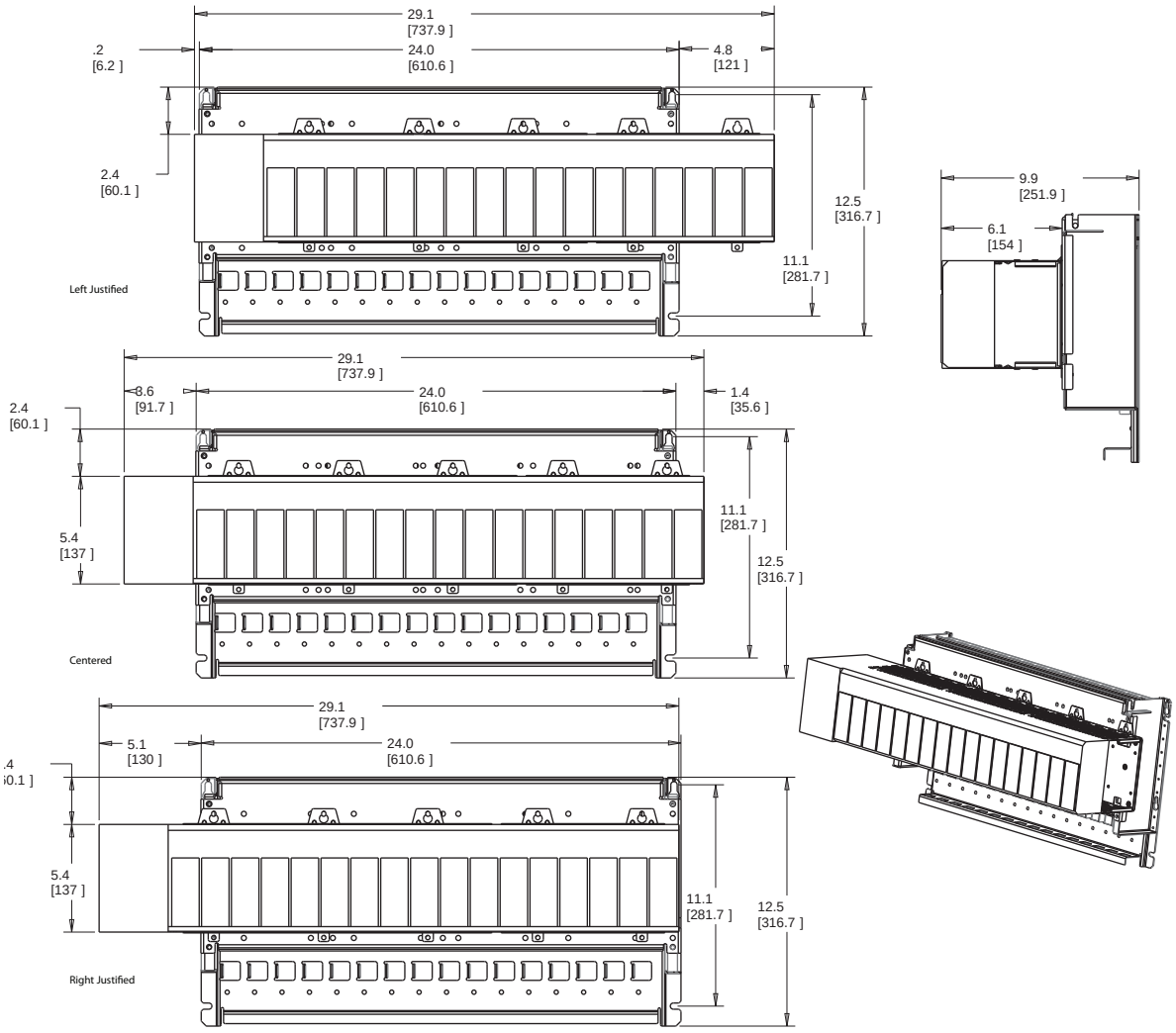

Notes:

1771-IA, IA2 to 1756-IA16

IMPORTANT	There are several key application considerations and system specifications (bottom of drawing) when using these components (conversion module, cable and input module). Read and understand these considerations before installation.

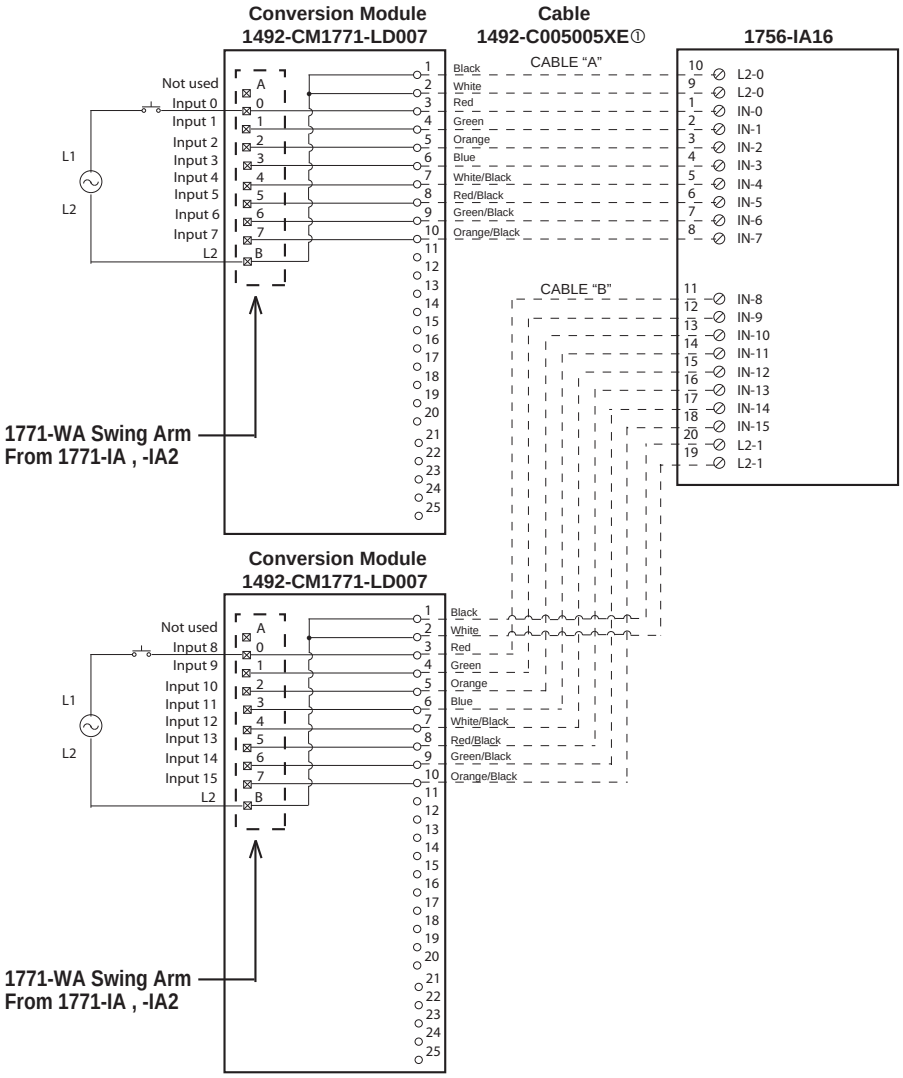

Conversion Module Installation and Application Considerations

① This Bul. 1492 cable consists of 2 separate cables (cable "A" and cable "B") wired to one 1756-IA16 RTB. Recommended cable lengths of 0.5 M / 0.5 M are shown. See table 2 for other lengths.

② The input delay times for the 1771-IA, -IA2 module versus the 1756-IA16 module are as follows:

	1771-IA, -IA2	*1756-IA16 w/ 1492-C005005XE*
a) Off-to-On Delay	24ms (+/-10ms)	10ms max (plus selectable filter)
b) On-to-Off Delay	24ms (+/-10ms)	8ms max (plus selectable filter)

③ The 1771-IA, -IA2 module is rated 87V to 138V AC and 97V to 138V DC. The 1756-IA16 module is rated 79V to 132V AC only.

④ Refer to your 1771-IA, -IA2 and 1756-IA16 Installation Manual wiring schematics and diagrams for more details.

[Reference Doc: 41170-952 (Version 02)]

1771-IAD to 1756-IA16

IMPORTANT	There are several key application considerations and system specifications (bottom of drawing) when using these components (conversion module, cable and input module). Read and understand these considerations before installation.

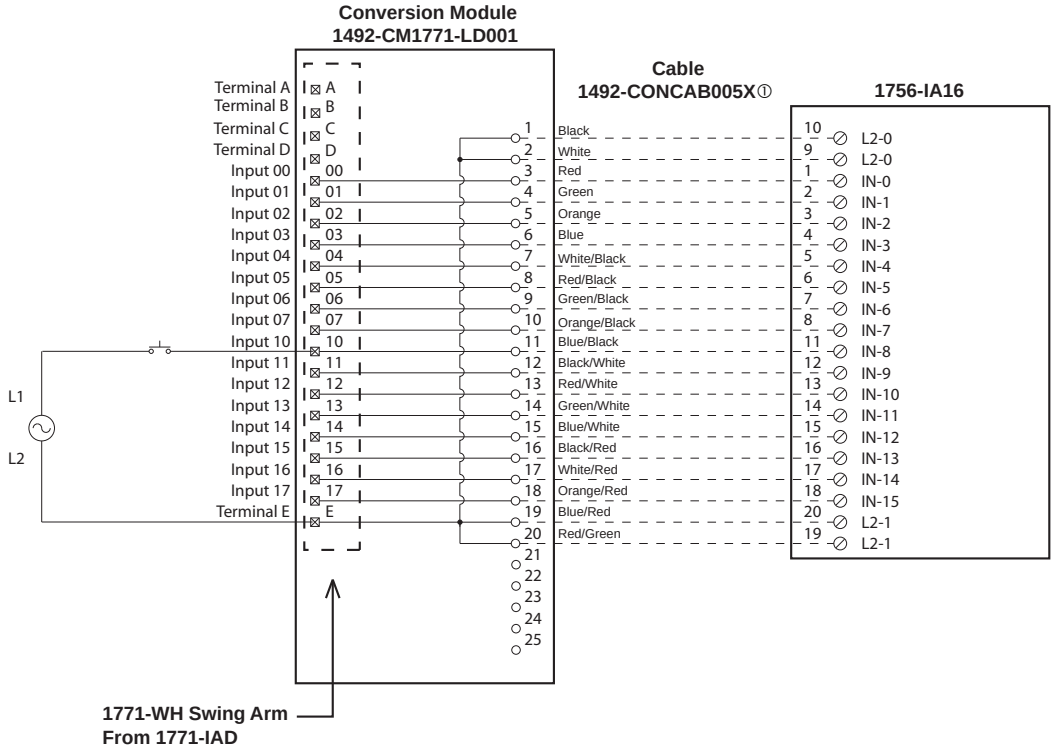

Conversion Module Installation and Application Considerations

① This Bul. 1492 cable consists of a cable wired to one 1756-IA16 RTB. Recommended cable lengths of 0.5M or 1.0M (005=0.5M, 010=1.0M). See table 2 for other lengths.

② The input delay times for the 1771-IAD module versus the 1756-IA16 module are as follows:

	1771-IAD	*1756-IA16 w/ 1492-CONCAB005X*
a) Off-to-On Delay	5ms (+/-3ms) @120VAC	10ms max (plus selectable filter)
b) On-to-Off Delay	25ms (+/-5ms)	8ms max (plus selectable filter)

③ The 1771-IAD module is rated 79V to 138V AC or DC. The 1756-IA16 module is rated 74V to 132V AC. If the input source voltage is DC use a 1756-IH16I and 1492-CM1771-LD002 conversion module.

④ Refer to your 1771-IAD and 1756-IA16 Installation Manual wiring schematics and diagrams for more details.

[Reference Doc: 41170-925 (Version 02)]

1771-IAD to 1756-IH16I

IMPORTANT	There are several key application considerations and system specifications (bottom of drawing) when using these components (conversion module, cable and input module). Read and understand these considerations before installation.

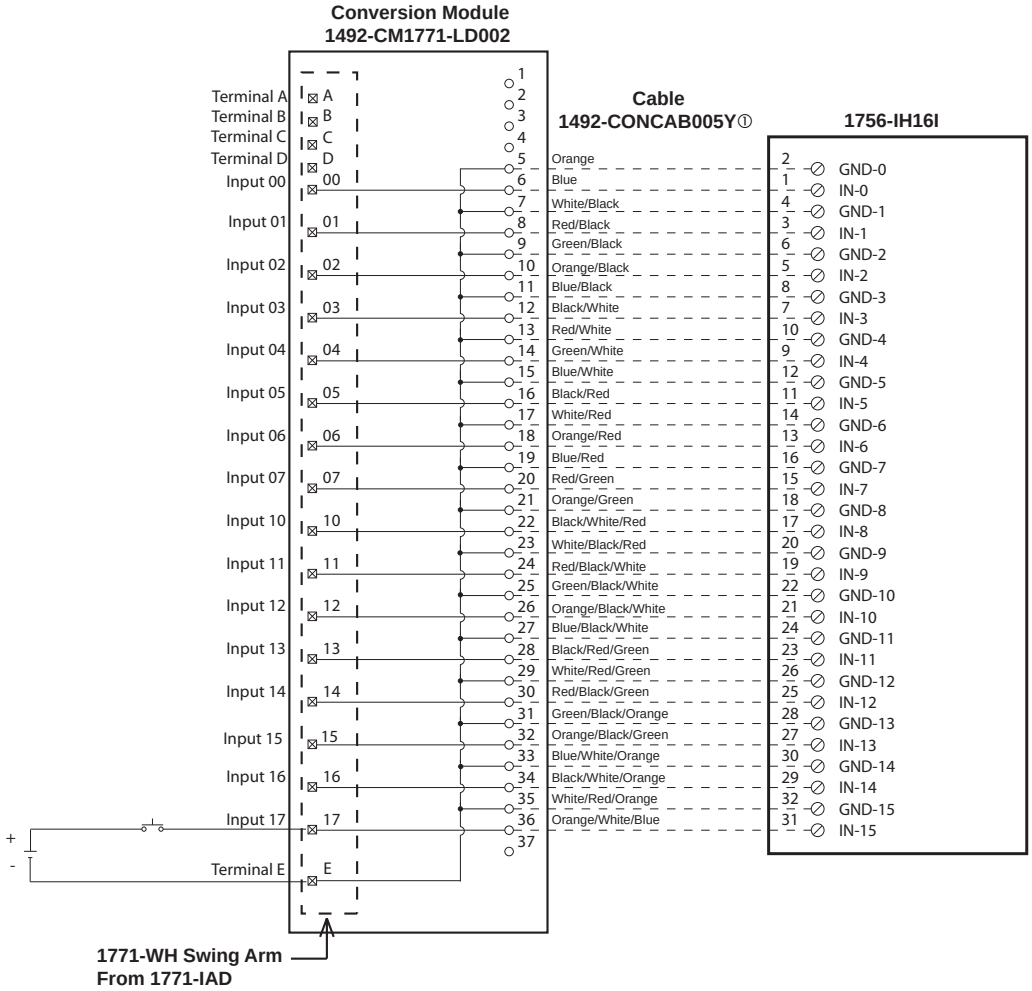

Conversion Module Installation and Application Considerations

① The input delay times for the 1771-IAD module versus 1756-IH16I module are as follows:

	1771-IAD	*1756-IH16I*
a) Off-to-On Delay	3ms @120V DC	2ms (plus selectable filter)
b) On-to-Off Delay	25ms (+/-5ms)	6ms (plus selectable filter)

② The 1771-IAD module is rated 79V to 138V AC or DC. The 1756-IH16I module is rated 90V to 146V DC. If the input spurce voltage is AC use a 1756-IA16 and 1492-CM1771-LD002 conversion module.

③ Refer to your 1771-IAD and 1756-IH16I Installation Manual wiring schematics and diagrams for more details.

[Reference Doc: 41170-927 (Version 02)]

1771-IAN to 1756-IA32

IMPORTANT	There are several key application considerations and system specifications (bottom of drawing) when using these components (conversion module, cable and input module). Read and understand these considerations before installation.

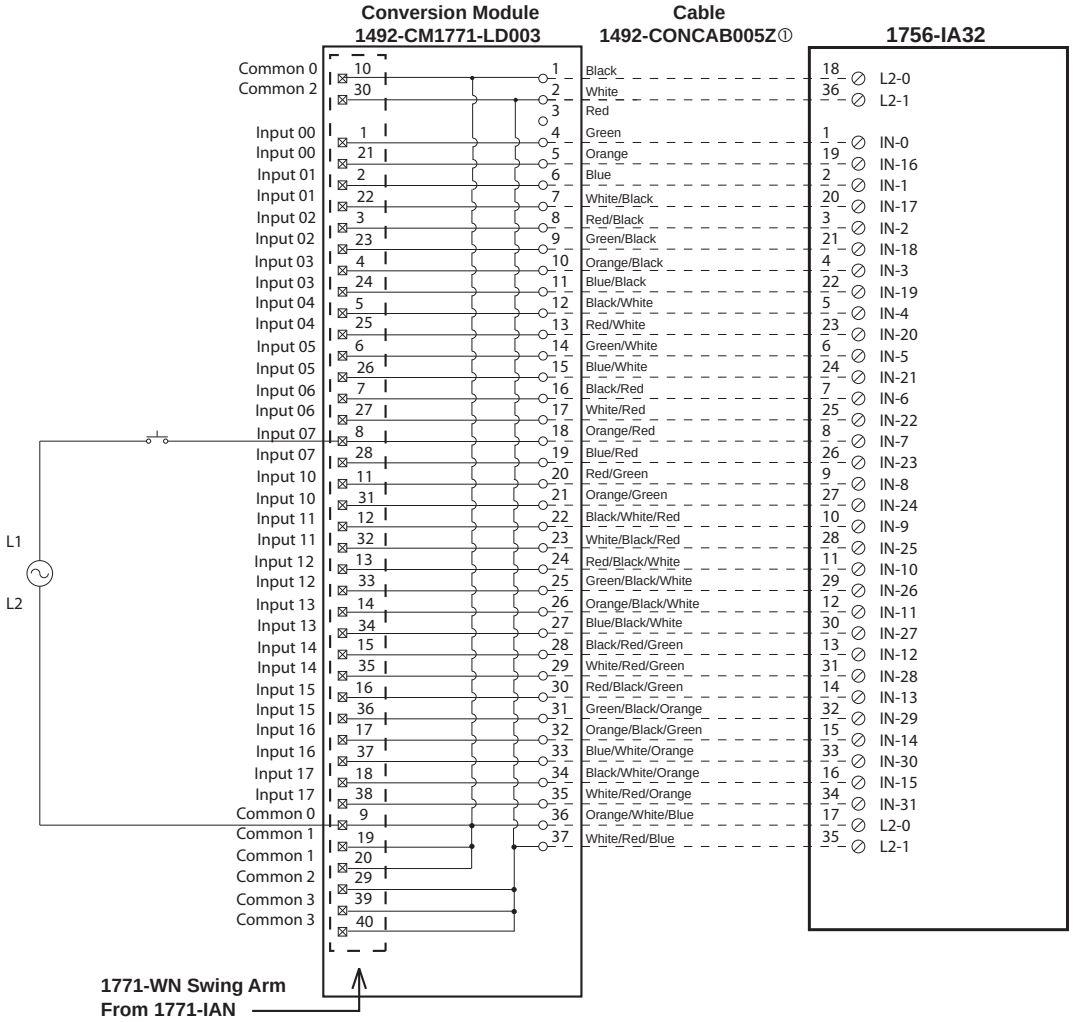

Conversion Module Installation and Application Considerations

① The input delay times for the 1771-IAN module versus 1756-IA32 module are as follows:

	1771-IAN	*1756-IA32*
a) Off-to-On Delay	10ms (+/-7ms)	10ms max (plus selectable filter)
b) On-to-Off Delay	20ms (+/-15ms)	8ms max (plus selectable filter)

② The 1771-IAN has 4 groups(allowing 4 seperate power supplies) and the 1756-IA32 has 2 groups. This module/cable combination ties Groups 0 & 1 from the 1771-IAN to Group 0 on the 1756-IA32 and it ties Groups 2 & 3 from the 1771-IAN to Group 1 on the 1756-IA32. Field wiring modification must be made to accommodate this if multiple supplies were used. If 4 supplies were used, 2 must be removed.

③ Refer to your 1771-IAN and 1756-IA32 Installation Manual wiring schematics and diagrams for more details.

1771-IB to 1756-IB16

IMPORTANT	There are several key application considerations and system specifications (bottom of drawing) when using these components (conversion module, cable and input module). Read and understand these considerations before installation.

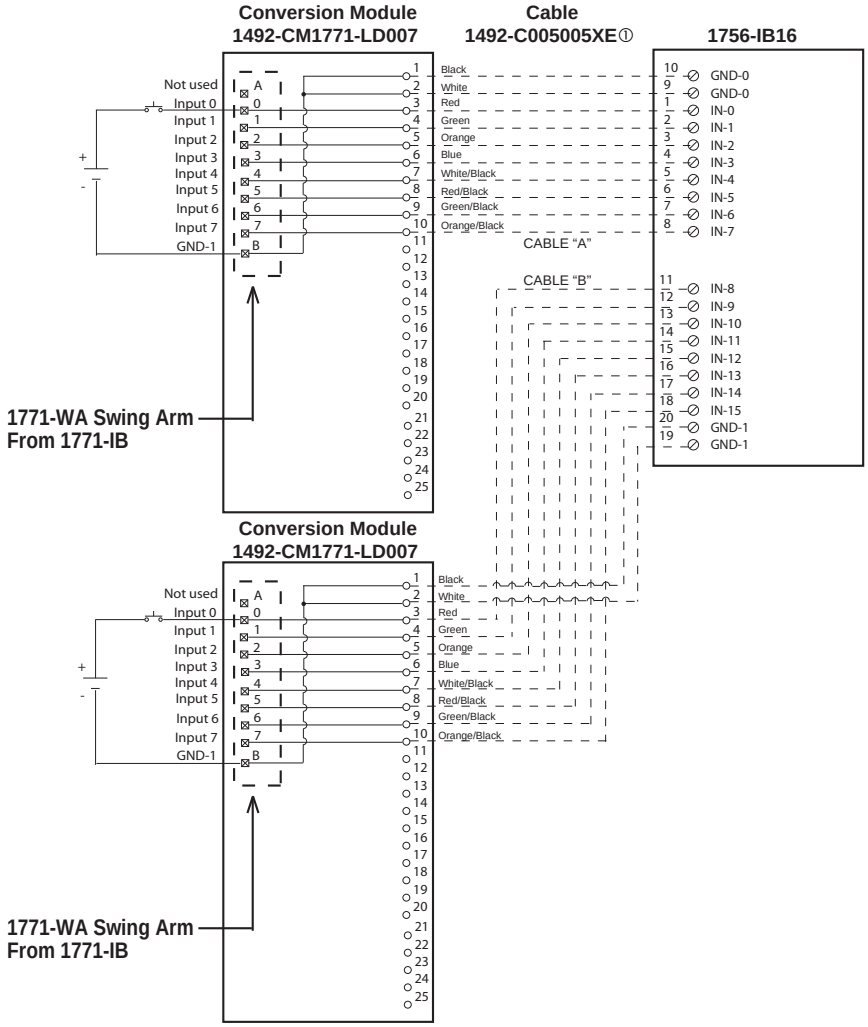

Conversion Module Installation and Application Considerations

① This Bul. 1492 cable consists of 2 separate cables (cable "A" and cable "B") wired to one 1756-IB16 RTB. Recommended cable lengths of 0.5 M / 0.5 M are shown. See table 2 for other lengths.

② The input delay times for the 1771-IB module versus the 1756-IB16 module are as follows:

	1771-IB	*1756-IB16 w/ 1492-C005005XE*
a) Off-to-On Delay	24ms (+/-10ms)	1ms max (plus selectable filter)
b) On-to-Off Delay	24ms (+/-10ms)	2ms max (plus selectable filter)

③ The 1771-IB module is rated 24V DC. The 1756-IB16 module is rated 10 - 31V DC only.

④ Refer to your 1771-IB and 1756-IB16 Installation Manual wiring schematics and diagrams for more details.

[Reference Doc: 41170-995 (Version 00)]

1771-IBD to 1756-IB16

IMPORTANT	There are several key application considerations and system specifications (bottom of drawing) when using these components (conversion module, cable and input module). Read and understand these considerations before installation.

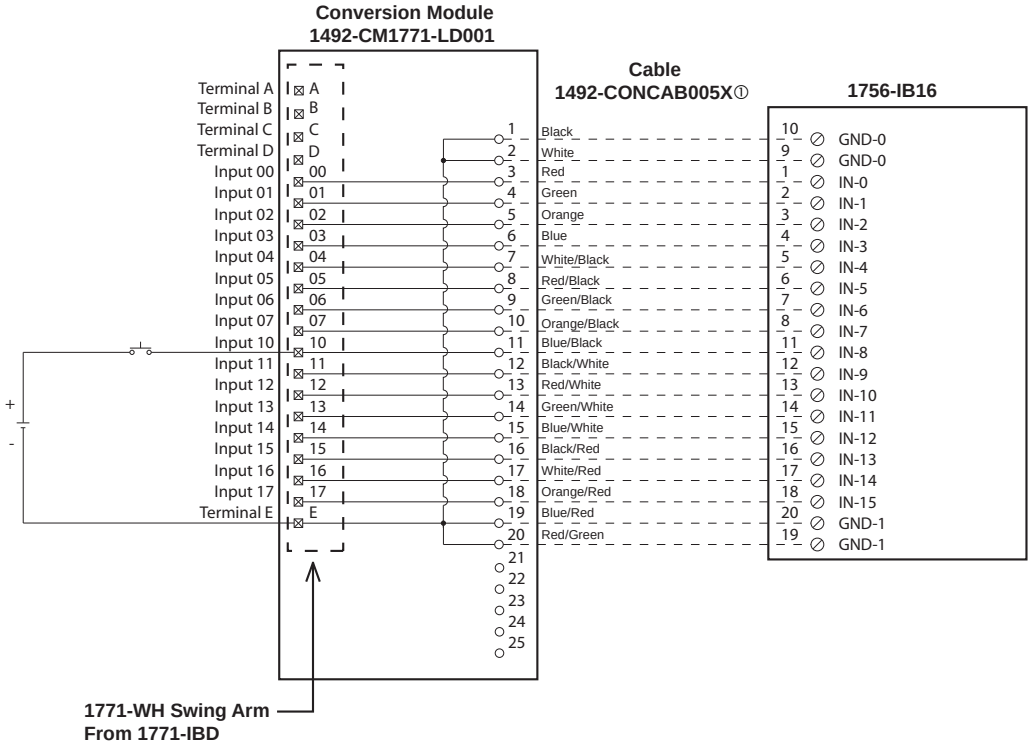

Conversion Module Installation and Application Considerations

① This Bul. 1492 cable consists of a cable wired to one 1756-IB16 RTB. Recommended cable lengths of 0.5M or 1.0M (005=0.5M, 010=1.0M). See table 2 for other lengths.

② The input delay times for the 1771-IBD module versus the 1756-IB16 module are as follows:

	1771-IBD	*1756-IB16 w/ 1492-CONCAB005X*
a) Off-to-On Delay	1ms	1ms (plus selectable filter)
b) On-to-Off Delay	1ms	2ms (plus selectable filter)

③ Refer to your 1771-IBD and 1756-IB16 Installation Manual wiring Schematics and diagrams for more details.

[Reference Doc: 41170-926 (Version 02)]

1771-IBN to 1756-IB32

IMPORTANT	There are several key application considerations and system specifications (bottom of drawing) when using these components (conversion module, cable and input module). Read and understand these considerations before installation.

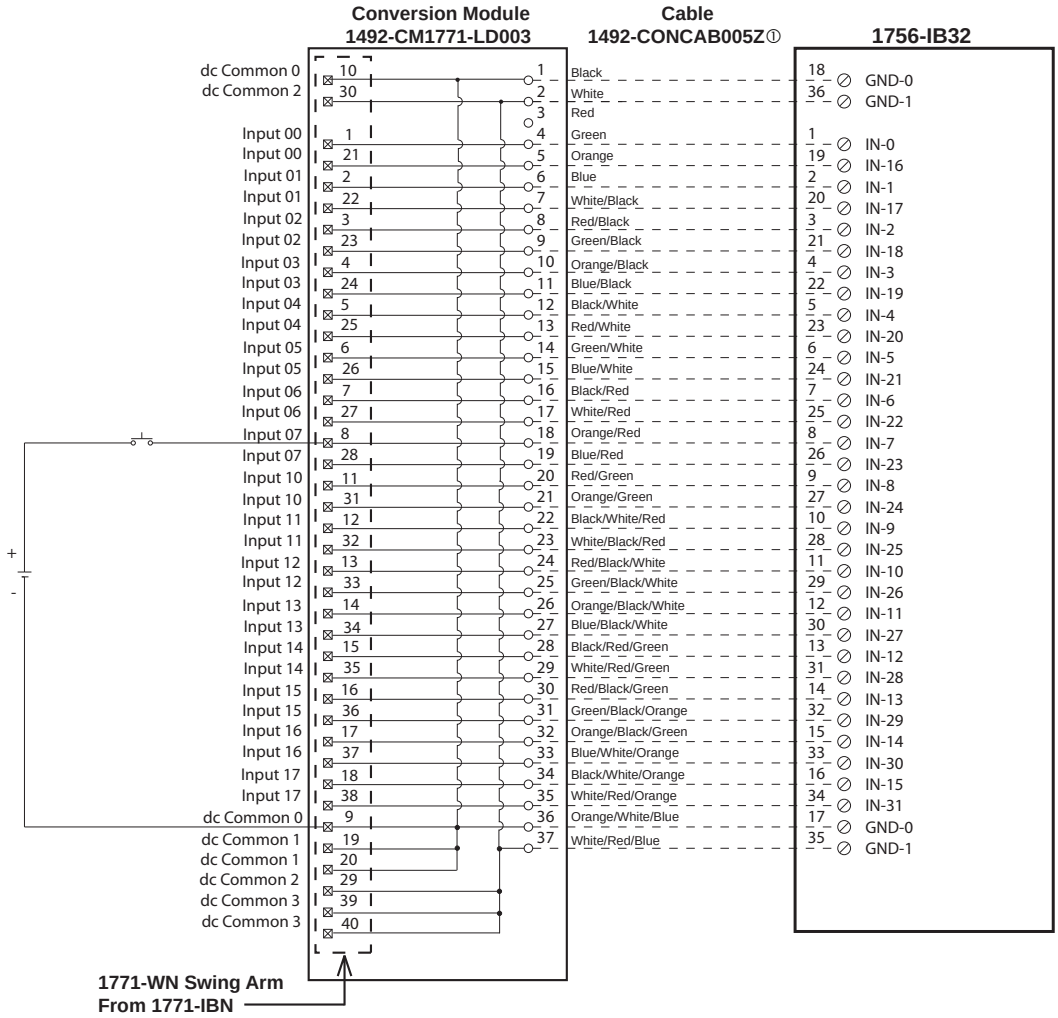

Conversion Module Installation and Application Considerations

① The input delay times for the 1771-IBN module versus 1756-IB32 module are as follows:

	1771-IBN	*1756-IB32*
a) Off-to-On Delay	6ms (+/-2ms)	1ms (plus selectable filter)
b) On-to-Off Delay	6ms (+/-2ms)	1ms (plus selectable filter)

② The 1771-IBN has 4 groups(allowing 4 seperate power supplies) and the 1756-IB32 has 2 groups. This module/cable combination ties Groups 0 & 1 from the 1771-IBN to Group 0 on the 1756-IB32 and it ties Groups 2 & 3 from the 1771-IBN to Group 1 on the 1756-IB32. Field wiring modification must be made to accommodate this if multiple supplies were used. If 4 supplies were used, 2 must be removed.

③ Refer to your 1771-IBN and 1756-IB32 Installation Manual wiring schematics and diagrams for more details.

1771-IC to 1756-IC16

IMPORTANT	There are several key application considerations and system specifications (bottom of drawing) when using these components (conversion module, cable and input module). Read and understand these considerations before installation.

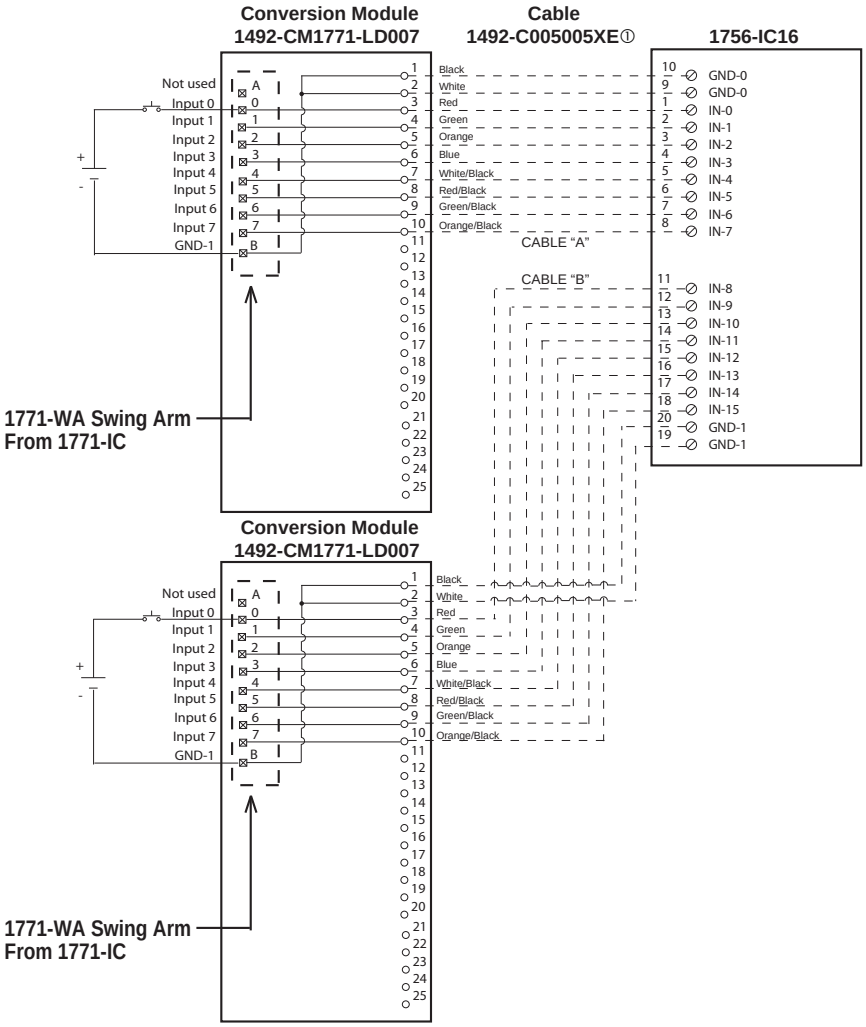

Conversion Module Installation and Application Considerations

① This Bul. 1492 cable consists of 2 separate cables (cable "A" and cable "B") wired to one 1756-IC16 RTB. Recommended cable lengths of 0.5 M / 0.5 M are shown. See table 2 for other lengths.

② The input delay times for the 1771-IC module versus the 1756-IC16 module are as follows:

	1771-IC	*1756-IC16 w/ 1492-C005005XE*
a) Off-to-On Delay	12ms (+/-7ms)	1ms max (plus selectable filter)
b) On-to-Off Delay	20ms (+/-7ms)	4ms max (plus selectable filter)

③ The 1771-IC module is rated 42 to 56V DC. The 1756-IC16 module is rated 42 to 56V DC only.

④ Refer to your 1771-IC and 1756-IC16 Installation Manual wiring schematics and diagrams for more details.

[Reference Doc: 41170-996 (Version 00)]

1771-ICD to 1756-IC16

IMPORTANT	There are several key application considerations and system specifications (bottom of drawing) when using these components (conversion module, cable and input module). Read and understand these considerations before installation.

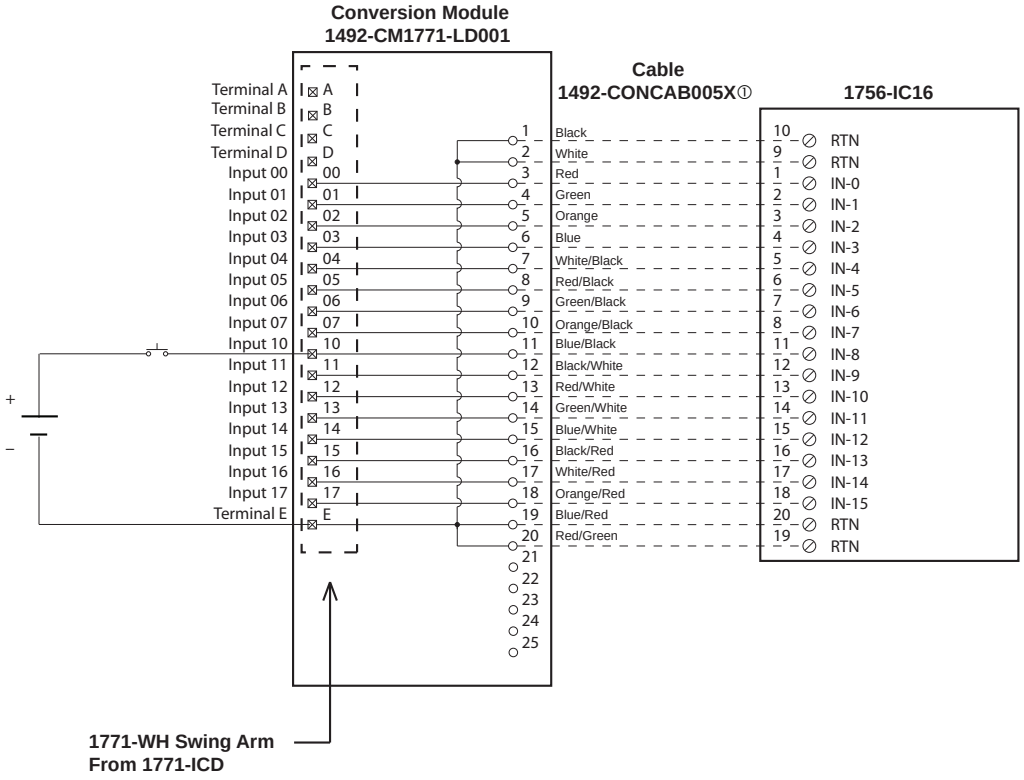

Conversion Module Installation and Application Considerations

① This Bul. 1492 cable consists of a cable wired to one 1756-IC16 RTB. Recommended cable lengths of 0.5M or 1.0M (005=0.5M, 010=1.0M). See table 2 for other lengths.

② The input delay times for the 1771-ICD module versus the 1756-IC16 module are as follows:

	1771-ICD	*1756-IC16 w/ 1492-CONCAB005X*
a) Off-to-On Delay	6ms (+/-2ms)	1ms max (plus selectable filter)
b) On-to-Off Delay	20ms (+/-1ms)	4ms max (plus selectable filter)

③ The 1771-ICD module is rated 20V to 60V AC or DC. The 1756-IC16 module is rated 30V to 60V DC.

④ Refer to your 1771-ICD and 1756-IC16 Installation Manual wiring schematics and diagrams for more details.

1771-ID to 1756-IA16I

IMPORTANT	There are several key application considerations and system specifications (bottom of drawing) when using these components (conversion module, cable and input module). Read and understand these considerations before installation.

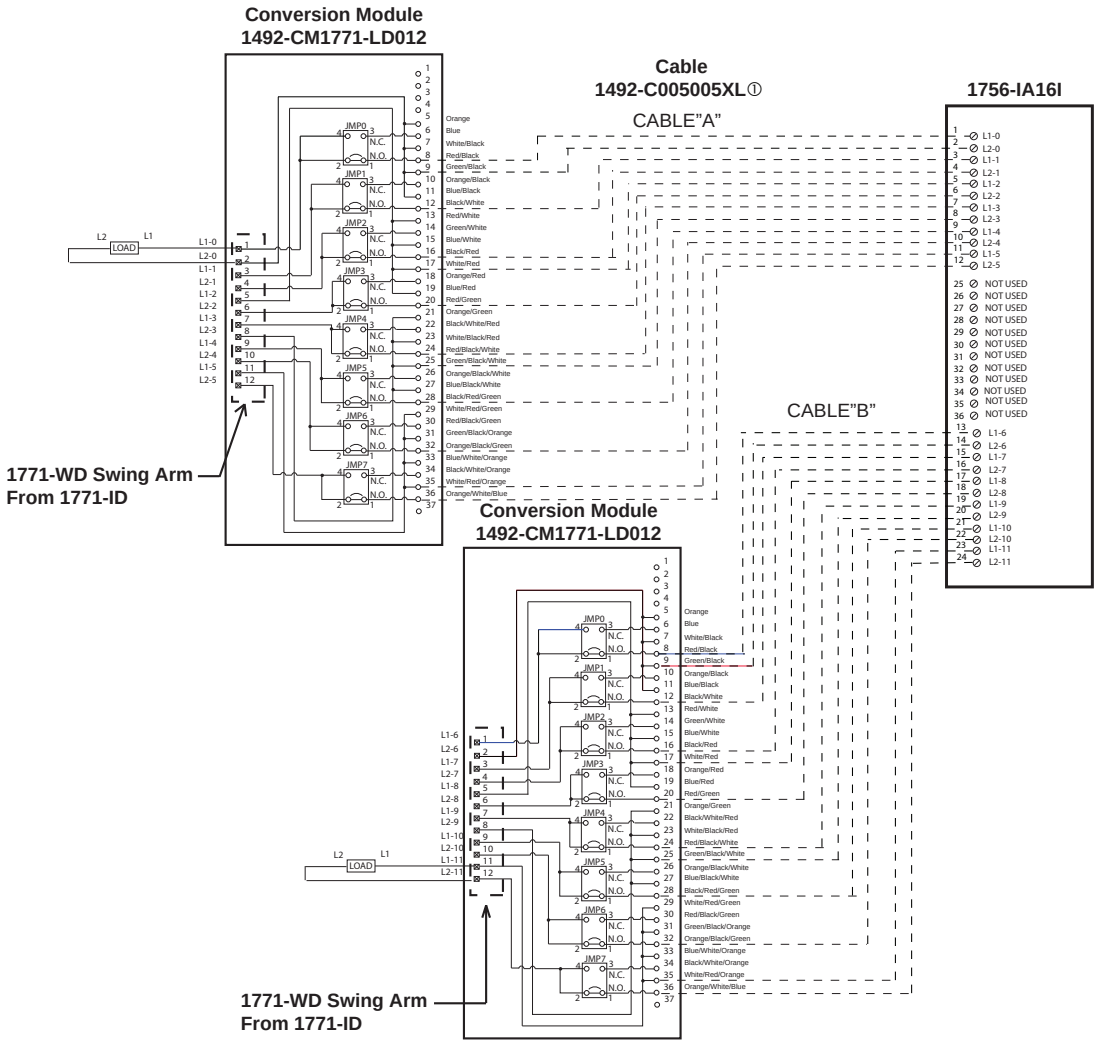

Conversion Module Installation and Application Considerations

① This Bul. 1492 cable consists of a cable wired to one 1756-IA16I RTB. Recommended cable lengths of 0.5M or 1.0M (005=0.5M, 010=1.0M). See table 2 for other lengths.

② The input delay times for the 1771-ID module versus the 1756-IA16I module are as follows:

	1771-ID	*1756-IA16I w/ 1492-C005005XL*
a) Off-to-On Delay	24ms (+/-10ms)	10ms max (plus selectable filter)
b) On-to-Off Delay	24ms (+/-10ms)	8ms max (plus selectable filter)

③ The 1771-ID module had a jumper selection of N.O. and N.C. outputs. The 1756-IA16I has both N.O. and N.C. outputs, but selection is by wiring termination on the 1756 swing arm. The 1492-CM1771-LD012 conversion module replaces the functionality of the 1771-ID jumpers with eight jumpers (JMP0 through JMP7). In the default position, the output will be N.O. If a N.C. output is required, change the jumper from pins 1-2 to pins 3-4.

④ Refer to your 1771-ID and 1756-IA16I Installation Manual wiring schematics and diagrams for more details. Ensure 1756 output module ratings are not exceeded. [Reference Doc: 41170-993 (Version 00)]

1771-ID01 to 1756-IM16I

IMPORTANT	There are several key application considerations and system specifications (bottom of drawing) when using these components (conversion module, cable and input module). Read and understand these considerations before installation.

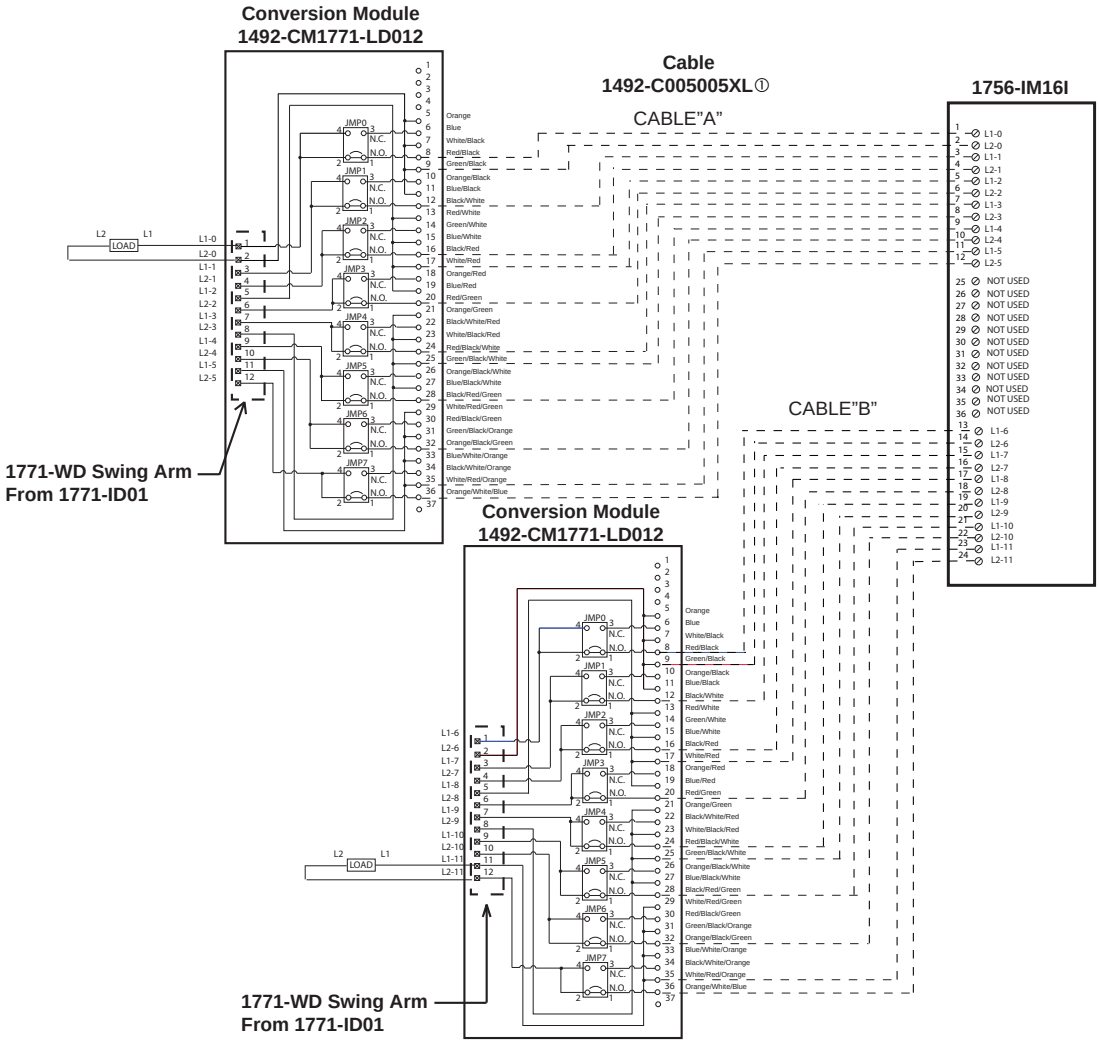

Conversion Module Installation and Application Considerations

① This Bul. 1492 cable consists of 2 separate cables (cable "A" and cable "B") wired to one 1756-IM16I RTB. Each cable can be either 0.5M or 1.0M (005=0.5M, 010=1.0M). Ensure that cable A and cable B are connected to the correct module in the conversion

② The input delay times for the 1771-IM module versus the 1756-IM16I module are as follows:

	1771-ID01	*1756-IM16I w/ 1492-C005005XL*
a) Off-to-On Delay	20ms (+/-10ms)	10ms max (plus selectable filter)
b) On-to-Off Delay	20ms (+/-10ms)	8ms max (plus selectable filter)

③ The 1771-ID01module had a jumper selection of N.O. and N.C. outputs. The 1756-IM16I has both N.O. and N.C. outputs, but selection is by wiring termination on the 1756 swing arm. The 1492-CM1771-LD012 conversion module replaces the functionality of the 1771-ID01 jumpers with eight jumpers (JMP0 through JMP7). In the default position, the output will be N.O. If a N.C. output is required, change the jumper from pins 1-2 to pins 3-4.

④ Refer to your 1771-ID01 and 1756-IM16I Installation Manual wiring schematics and diagrams for more details. Ensure 1756 output module ratings are not exceeded. [Reference Doc: 41171-015 (Version 00)]

1771-ID16 to 1756-IA16I

IMPORTANT	There are several key application considerations and system specifications (bottom of drawing) when using these components (conversion module, cable and input module). Read and understand these considerations before installation.

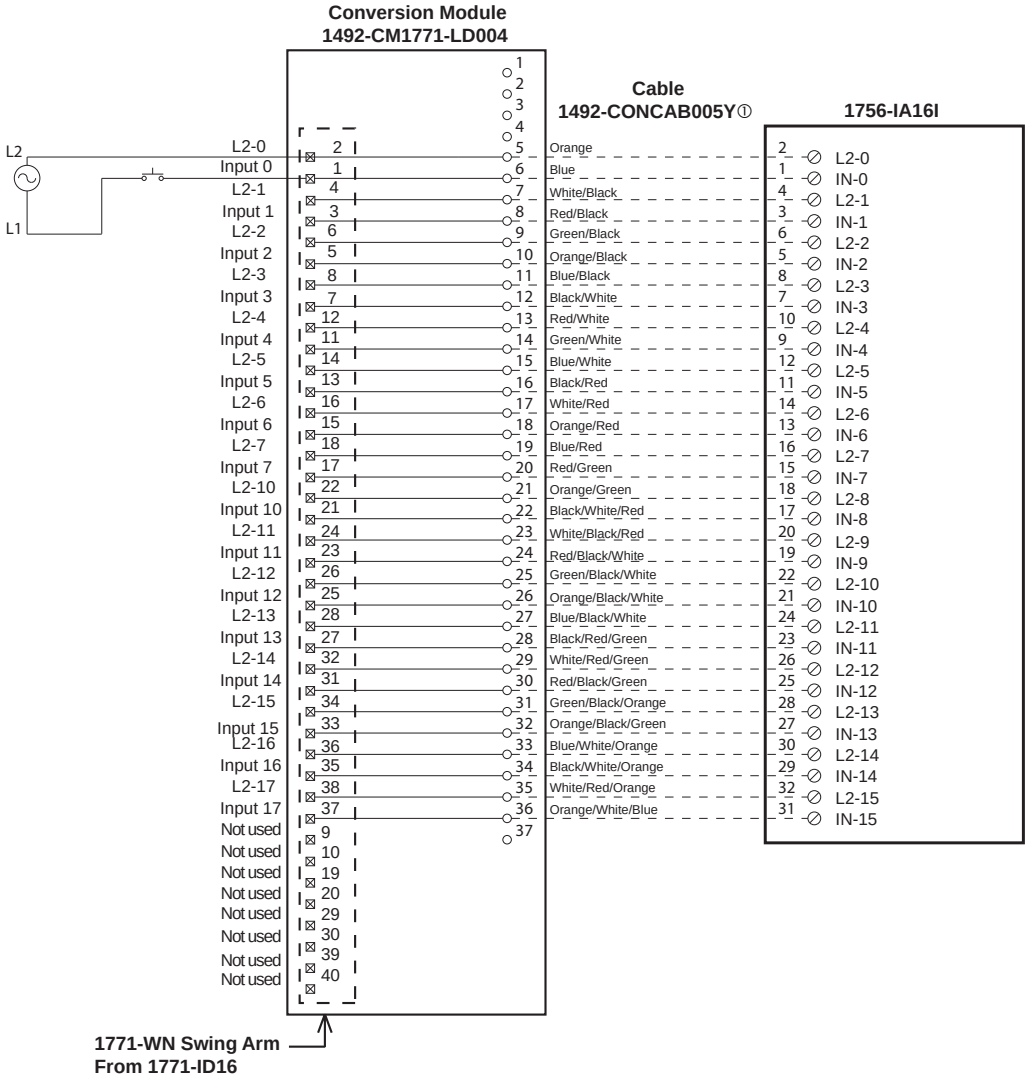

Conversion Module Installation and Application Considerations

① The input delay times for the 1771-ID16 module versus 1756-IA16I module are as follows:

	1771-ID16	***1756-IA16I***
a) Off-to-On Delay	0.57ms	10ms max (plus selectable filter)
b) On-to-Off Delay	9ms or 18ms (selectable)	8ms max (plus selectable filter)

② The 1771-ID16 module is rated 74V to 138V AC and105V to 138V DC. The 1756-IA16I is rated 79V to 132V AC. If the input source voltage is DC use a 1756-IH16I with this conversion module.

③ Refer to your 1771-ID16 and 1756-IA16I Installation Manual wiring schematics and diagrams for more details.

[Reference Doc: 41170-931 (Version 02)]

1771-ID16 to 1756-IH16I

IMPORTANT	There are several key application considerations and system specifications (bottom of drawing) when using these components (conversion module, cable and input module). Read and understand these considerations before installation.

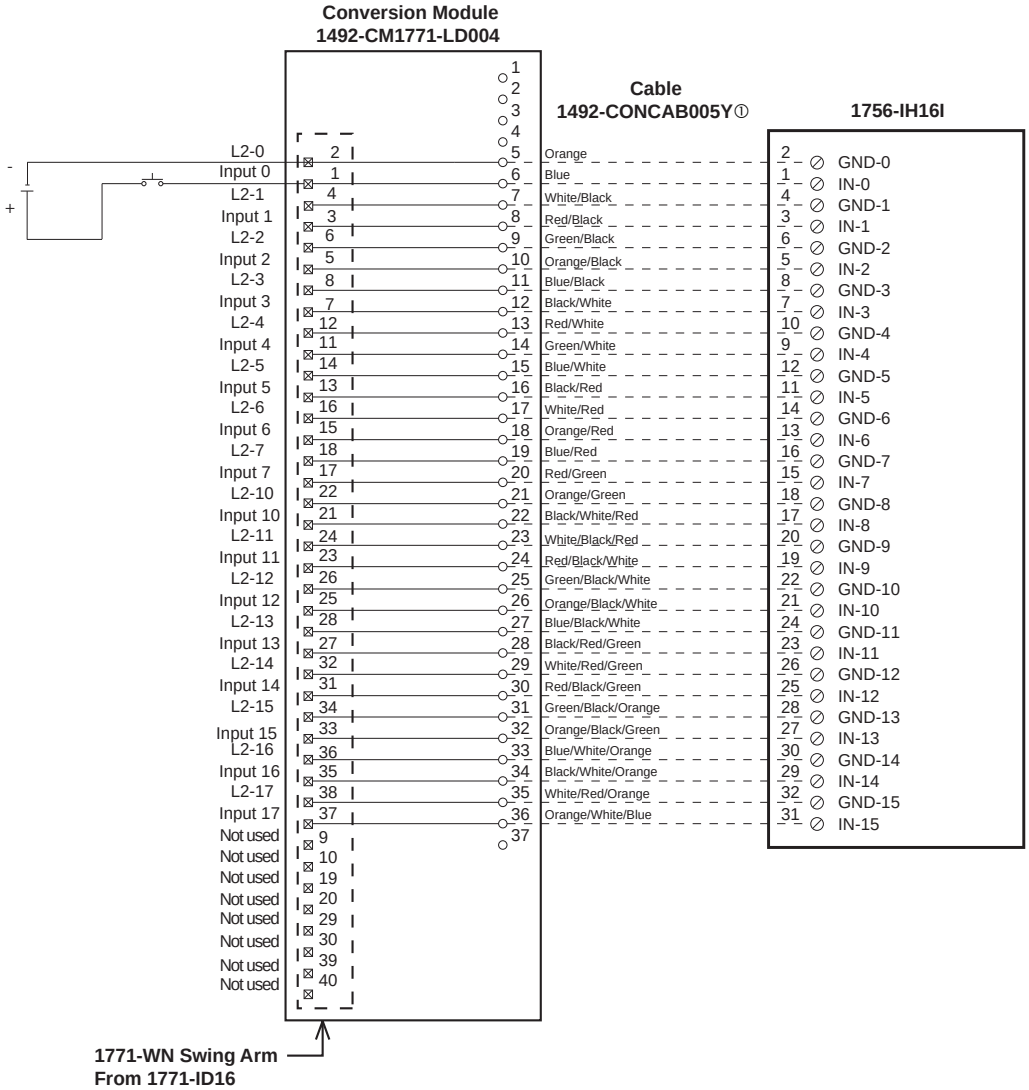

Conversion Module Installation and Application Considerations

① The input delay times for the 1771-ID16 module versus 1756-IH16I module are as follows:

	1771-ID16	***1756-IH16I***
a) Off-to-On Delay	0.57ms	2ms max (plus selectable filter)
b) On-to-Off Delay	9ms or 18ms (selectable)	6ms max (plus selectable filter)

② The 1771-ID16 module is rated 74V to 138V AC and105V to 138V DC. The 1756-IH16I is rated 90V to 146V DC. If the input source voltage is AC use a 1756-IA16I with this conversion module.

③ Refer to your 1771-ID16 and 1756-IH16I Installation Manual wiring schematics and diagrams for more details.

[Reference Doc: 41170-932 (Version 02)]

1771-IG to 1756-IG16

IMPORTANT	There are several key application considerations and system specifications (bottom of drawing) when using these components (conversion module, cable and input module). Read and understand these considerations before installation.

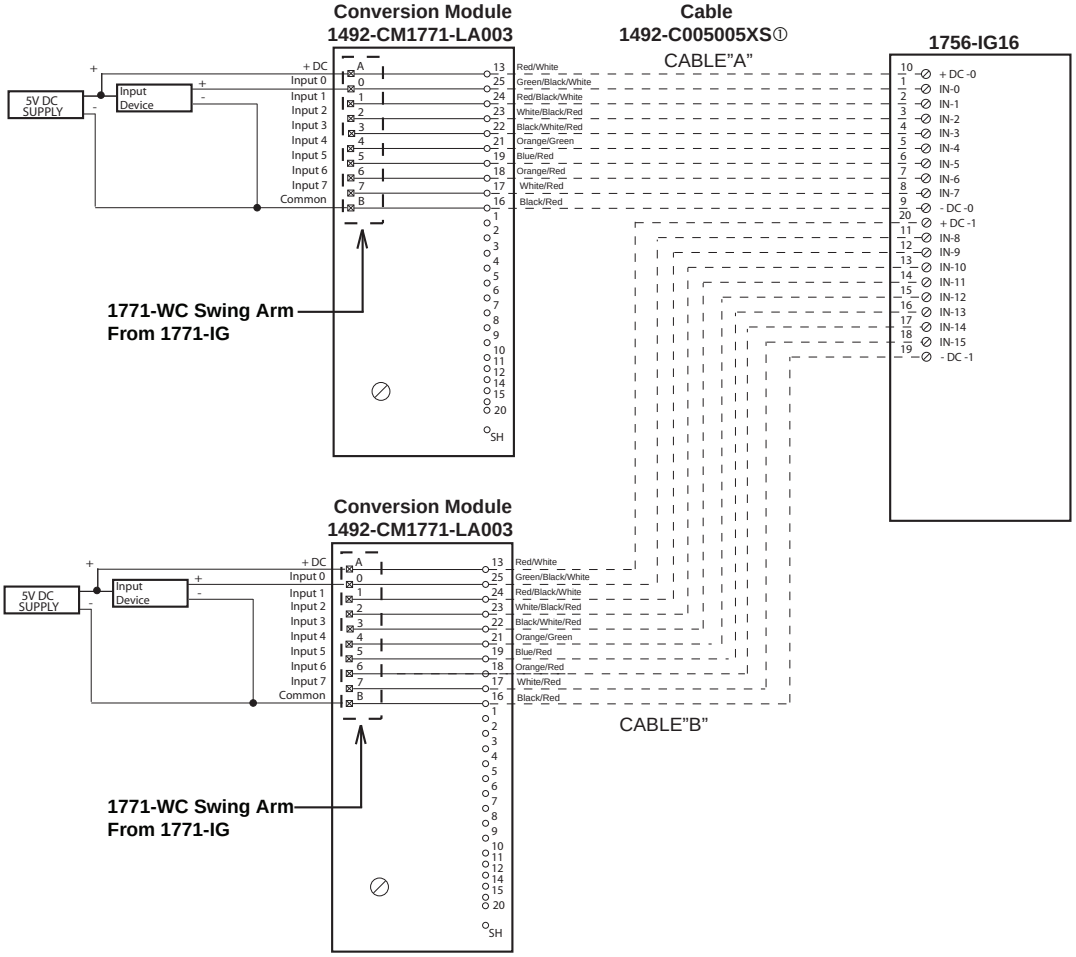

Conversion Module Installation and Application Considerations

① This Bul. 1492 cable consists of 2 separate cables (cable "A" and cable "B") wired to one 1756-IG16 RTB. Each cable can be either 0.5M or 1.0M (005=0.5M, 010=1.0M). Ensure that cable A and cable B are connected to the correct module in the conversion.

② The input delay times for the 1771-IG module versus the 1756-IG16 module are as follows:

	1771-IG	*1756-IG16 w/ 1492-C005005XS*
a) Off-to-On Delay	1ms (+/-10ms)	270ms max (plus selectable filter)
b) On-to-Off Delay	1ms (+/-10ms)	390ms max (plus selectable filter)

③ The 1771-IG module is rated 5V DC TTL INPUT MODULE. The 1756-IG16 module is rated 5V DC TTL INPUT MODULE only.

④ Refer to your 1771-IG and 1756-IG16 Installation and User Manuals for additional information concerning comparisons of module wiring, features and configuration details. [Reference Doc: 41171-027 (Version 00)]

1771-IGD to 1756-IG16

IMPORTANT	There are several key application considerations and system specifications (bottom of drawing) when using these components (conversion module, cable and input module). Read and understand these considerations before installation.

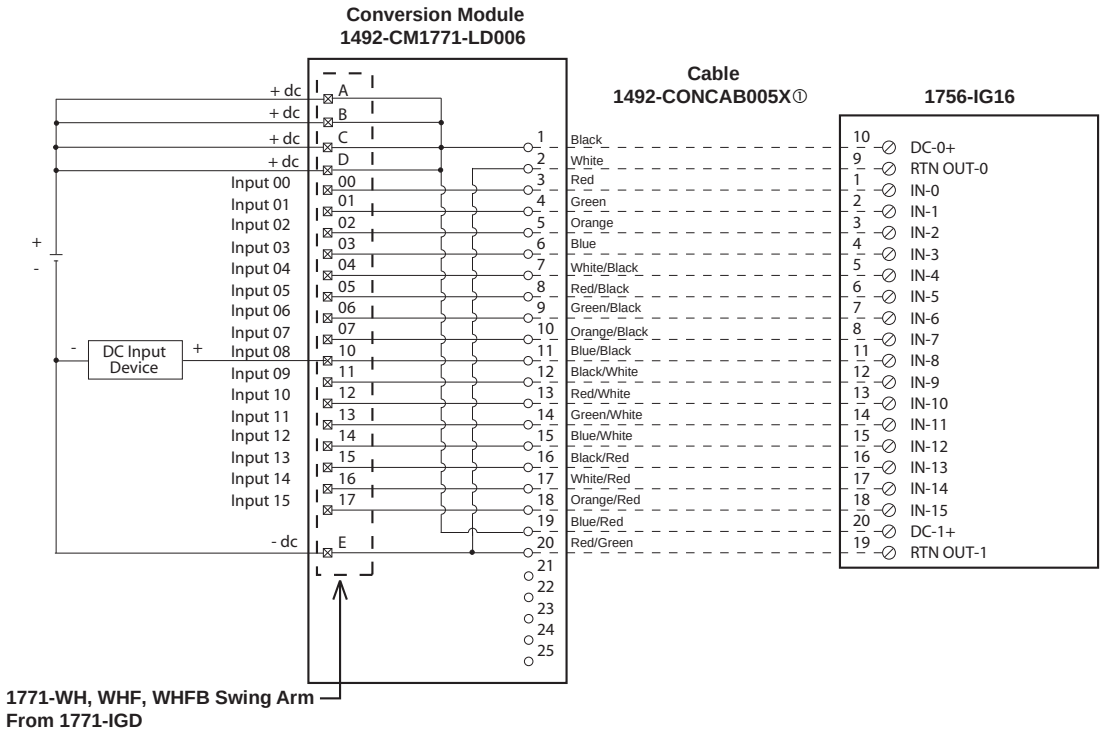

Conversion Module Installation and Application Considerations

① This Bul. 1492 cable consists of a cable wired to one 1756-IG16 RTB. Recommended cable lengths of 0.5M or 1.0M (005=0.5M, 010=1.0M). See table 2 for other lengths.

② The 1771-IGD module output current limits versus 1756-IG16 limits are as follows:

	1771-IGD	*1756-IG16 w/ 1492-CONCAB005X*
a) Current/Point	122mA	110mA
b) Current/Module	500mA	110mA

③ The 1771-IGD is rated 5V DC. The 1756-IG16 is rated 4.5V to 5.5V DC.

④ Refer to your 1771-IGD and 1756-IG16 Installation Manual wiring schematics and diagrams for more details. Ensure 1756 output module ratings are not exceeded. [Reference Doc: 41171-004 (Version 00)]

1771-IH to 1756-IC16

IMPORTANT	There are several key application considerations and system specifications (bottom of drawing) when using these components (conversion module, cable and input module). Read and understand these considerations before installation.

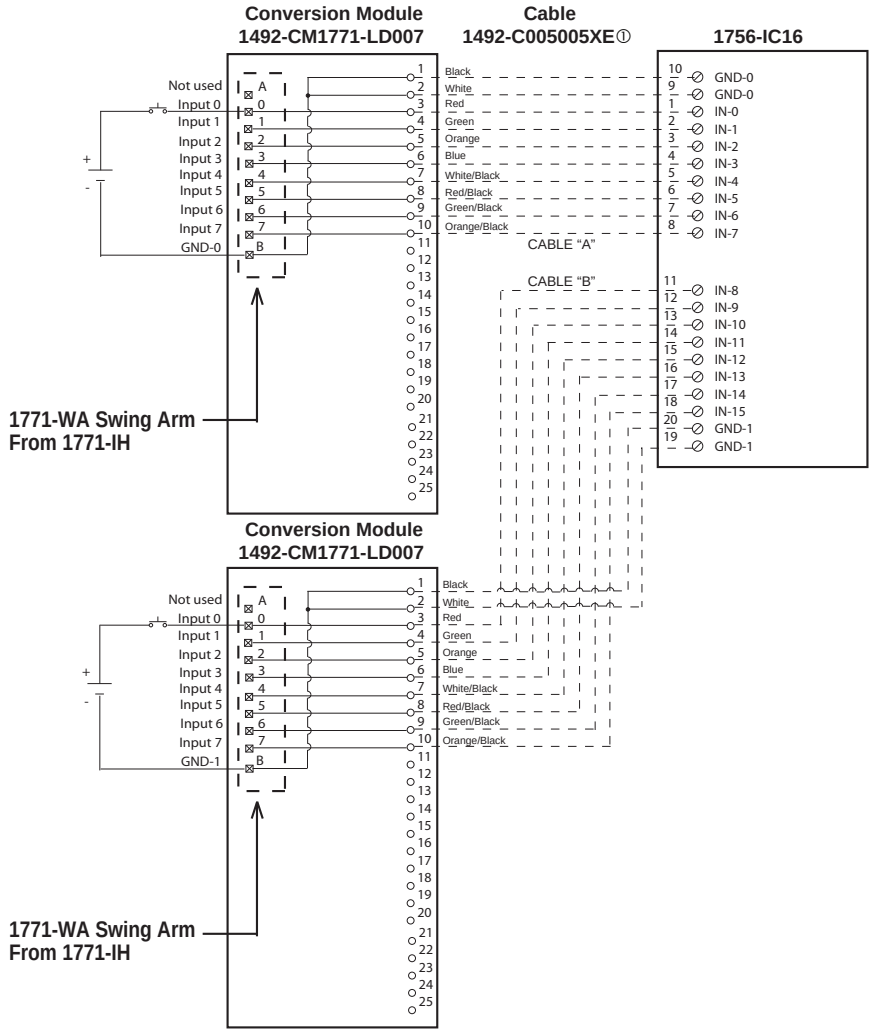

Conversion Module Installation and Application Considerations

① This Bul. 1492 cable consists of 2 separate cables (cable "A" and cable "B") wired to one 1756-IC16 RTB. Recommended cable lengths of 0.5 M / 0.5 M are shown. See table 2 for other lengths.

② The input delay times for the 1771-IH module versus the 1756-IC16 module are as follows:

	1771-IH	*1756-IC16 w/ 1492-C005005XE*
a) Off-to-On Delay	15ms (+/-7ms)	1ms max (plus selectable filter)
b) On-to-Off Delay	15ms (+/-7ms)	4ms max (plus selectable filter)

③ The 1771-IH module is rated 24V - 48V DC. The 1756-IC16 module is rated 30V - 60V DC.

④ Refer to your 1771-IH and 1756-IC16 Installation Manual wiring schematics and diagrams for more details.

[Reference Doc: 41170-997 (Version 00)]

1771-IM to 1756-IM16I

IMPORTANT	There are several key application considerations and system specifications (bottom of drawing) when using these components (conversion module, cable and input module). Read and understand these considerations before installation.

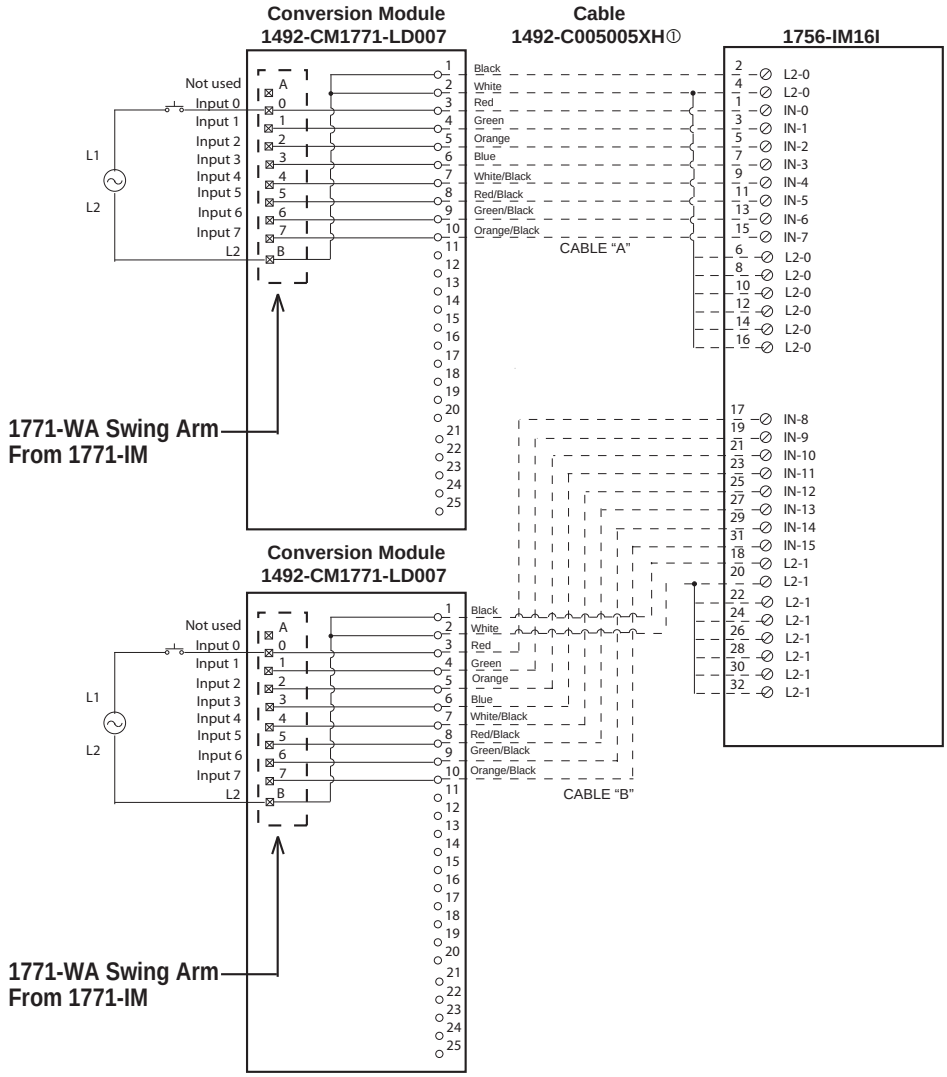

Conversion Module Installation and Application Considerations

① This Bul. 1492 cable consists of 2 separate cables (cable "A" and cable "B") wired to one 1756-IM16I RTB. Recommended cable lengths of 0.5 M / 0.5 M are shown. See table 2 for other lengths.

② The input delay times for the 1771-IM module versus the 1756-IM16I module are as follows:

	1771-IM	*1756-IM16I w/ 1492-C005005XH*
a) Off-to-On Delay	20ms (+/-6ms)	10ms max (plus selectable filter)
b) On-to-Off Delay	20ms (+/-6ms)	8ms max (plus selectable filter)

③ The 1771-IM module is rated 220V to 240V AC. The 1756-IM16I module is rated 159 - 265V AC only.

④ Refer to your 1771-IM and 1756-IM16I Installation Manual wiring schematics and diagrams for more details.

[Reference Doc: 41170-990 (Version 00)]

1771-IMD to 1756-IM16I

IMPORTANT	There are several key application considerations and system specifications (bottom of drawing) when using these components (conversion module, cable and input module). Read and understand these considerations before installation.

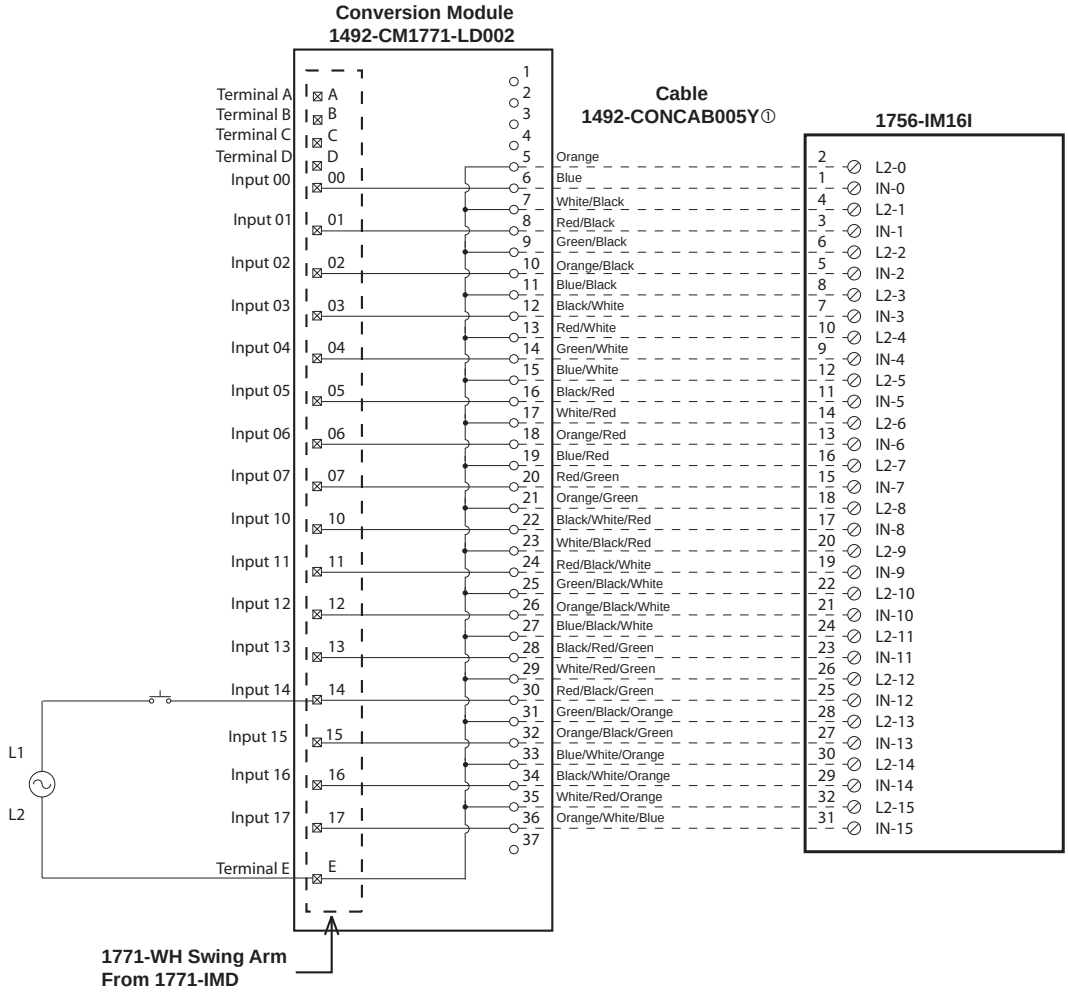

Conversion Module Installation and Application Considerations

① The input delay times for the 1771-IMD module versus 1756-IM16I module are as follows:

	1771-IMD	*1756-IM16I*
a) Off-to-On Delay	15ms (+/-8ms)	10ms (plus selectable filter)
b) On-to-Off Delay	172ms (+/-56ms)	8ms (plus selectable filter)

② The 1771-IMD module is rated 184V AC to 250V AC and 166V-230V DC. The 1756-IM16I module is rated 159V to 265V AC. A1756 input module with an equivalent DC voltage range to convert the 1771-IMD is not available.

③ Refer to your 1771-IMD and 1756-IM16I Installation Manual wiring schematics and diagrams for more details.

[Reference Doc: 41170-928 (Version 02)]

1771-IN to 1756-IN16

IMPORTANT	There are several key application considerations and system specifications (bottom of drawing) when using these components (conversion module, cable and input module). Read and understand these considerations before installation.

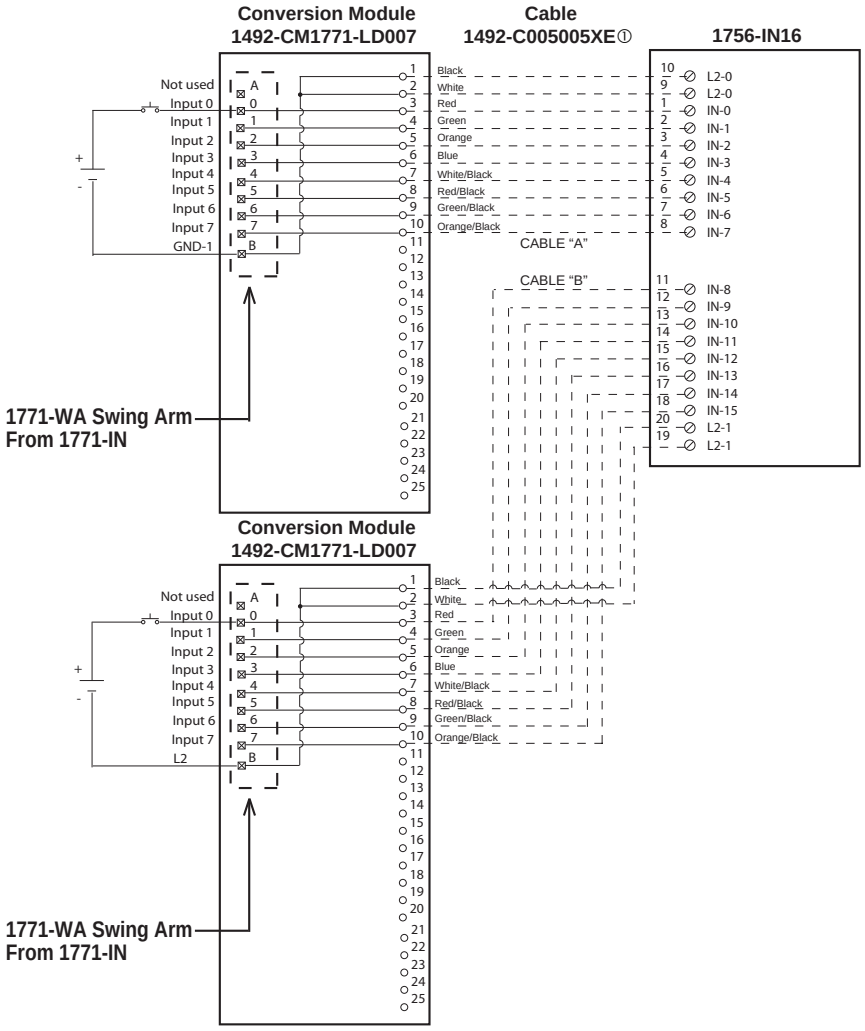

Conversion Module Installation and Application Considerations

① This Bul. 1492 cable consists of 2 separate cables (cable "A" and cable "B") wired to one 1756-IN16 RTB. Recommended cable lengths of 0.5 M / 0.5 M are shown. See table 2 for other lengths.

② The input delay times for the 1771-IN module versus the 1756-IN16 module are as follows:

	1771-IN	*1756-IN16 w/ 1492-C005005XE*
a) Off-to-On Delay	18ms (+/-10ms)	10ms max (plus selectable filter)
b) On-to-Off Delay	18ms (+/-10ms)	10ms max (plus selectable filter)

③ The 1771-IN module is rated 24V AC. The 1756-IN16 module is rated 24V AC only.

④ Refer to your 1771-IN and 1756-IN16 Installation Manual wiring schematics and diagrams for more details.

[Reference Doc: 41170-998 (Version 00)]

1771-IND to 1756-IN16

IMPORTANT	There are several key application considerations and system specifications (bottom of drawing) when using these components (conversion module, cable and input module). Read and understand these considerations before installation.

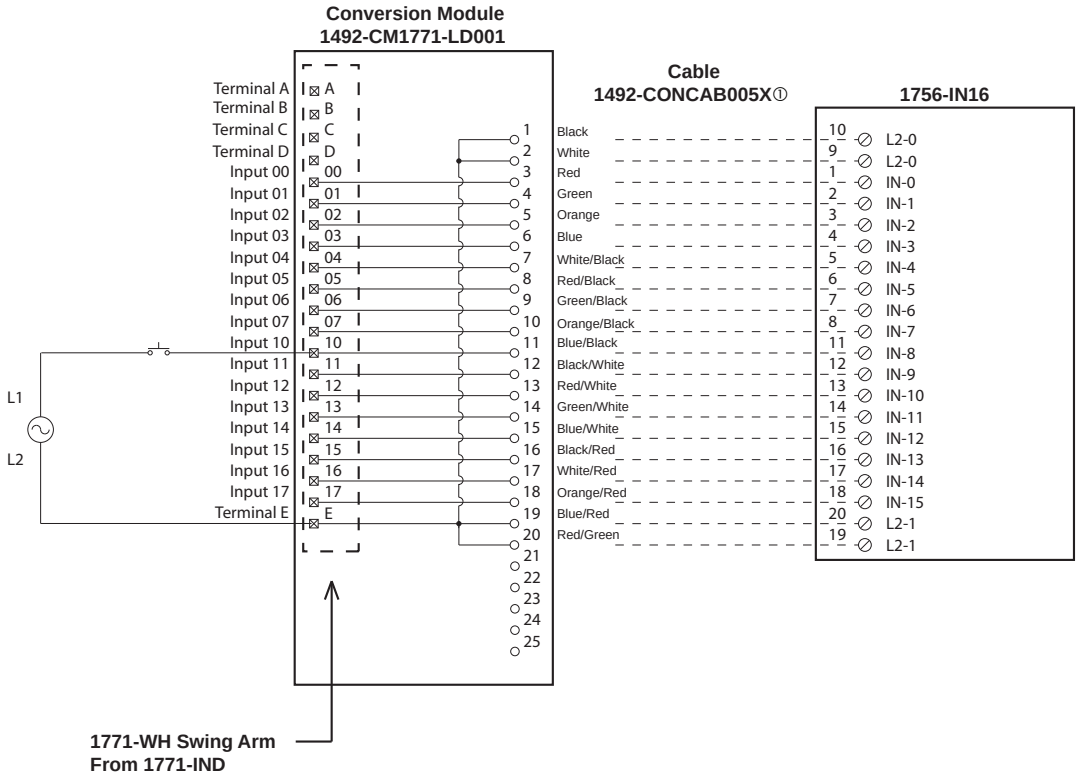

Conversion Module Installation and Application Considerations

① This Bul. 1492 cable consists of a cable wired to one 1756-IN16 RTB. Recommended cable lengths of 0.5M or 1.0M (005=0.5M, 010=1.0M). See table 2 for other lengths.

② The input delay times for the 1771-IND module versus the 1756-IN16 module are as follows:

	1771-IND	*1756-IN16 w/ 1492-CONCAB005X*
a) Off-to-On Delay	35ms (+/-10ms) @24V AC	10ms max (plus selectable filter)
b) On-to-Off Delay	45ms (+/-15ms)	10ms max (plus selectable filter)

③ The 1771-IND module is rated 24V AC or DC. The 1756-IN16 module is rated 10V to 30V AC.

④ Refer to your 1771-IND and 1756-IN16 Installation Manual wiring schematics and diagrams for more details.

[Reference Doc: 41170-002 (Version 00)]

1771-IND1 to 1756-IN16

IMPORTANT	There are several key application considerations and system specifications (bottom of drawing) when using these components (conversion module, cable and input module). Read and understand these considerations before installation.

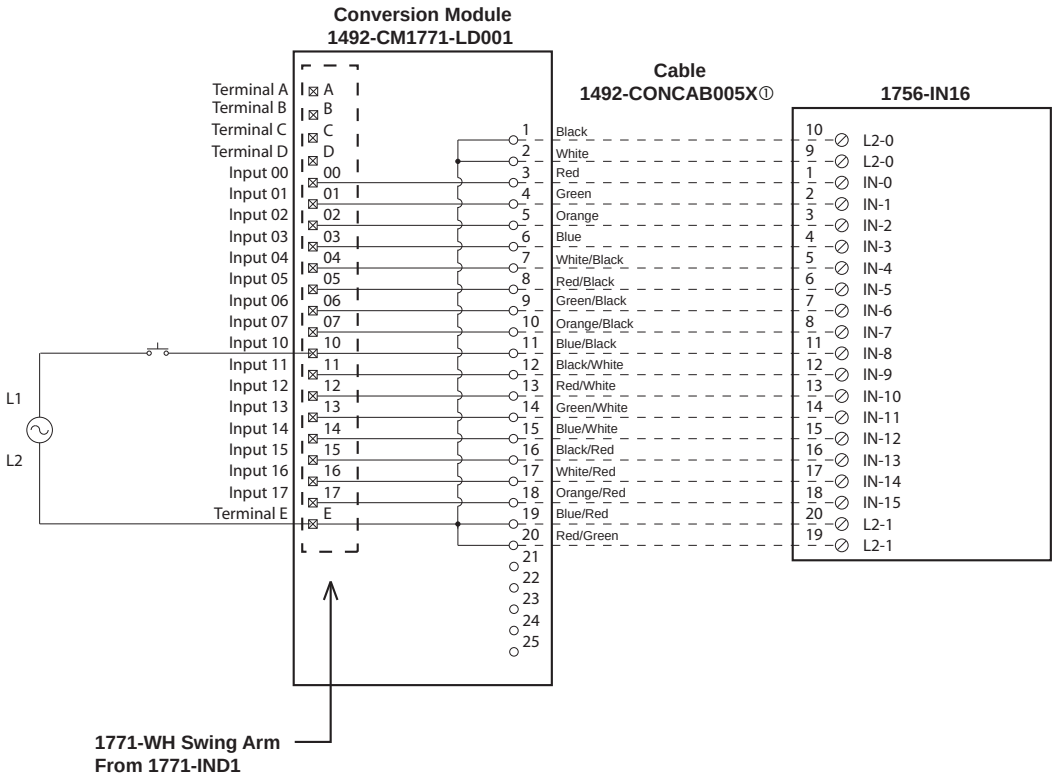

Conversion Module Installation and Application Considerations

① This Bul. 1492 cable consists of a cable wired to one 1756-IN16 RTB. Recommended cable lengths of 0.5M or 1.0M (005=0.5M, 010=1.0M). See table 2 for other lengths.

② The input delay times for the 1771-IND1 module versus the 1756-IN16 module are as follows:

	1771-IND1	***1756-IN16 w/ 1492-CONCAB005X***
a) Off-to-On Delay	25ms (+/-5ms) @48V AC	10ms max (plus selectable filter)
b) On-to-Off Delay	35ms (+/-10ms)	10ms max (plus selectable filter)

③ The 1771-IND1 module is rated 48V AC. The 1756-IN16 module is rated 10V to 30V AC.

④ Refer to your 1771-IND1 and 1756-IN16 Installation Manual wiring schematics and diagrams for more details.

[Reference Doc: 41170-003 (Version 00)]

1771-IQ to 1756-IB16I— Sinking

IMPORTANT	There are several key application considerations and system specifications (bottom of drawing) when using these components (conversion module, cable and input module). Read and understand these considerations before installation.

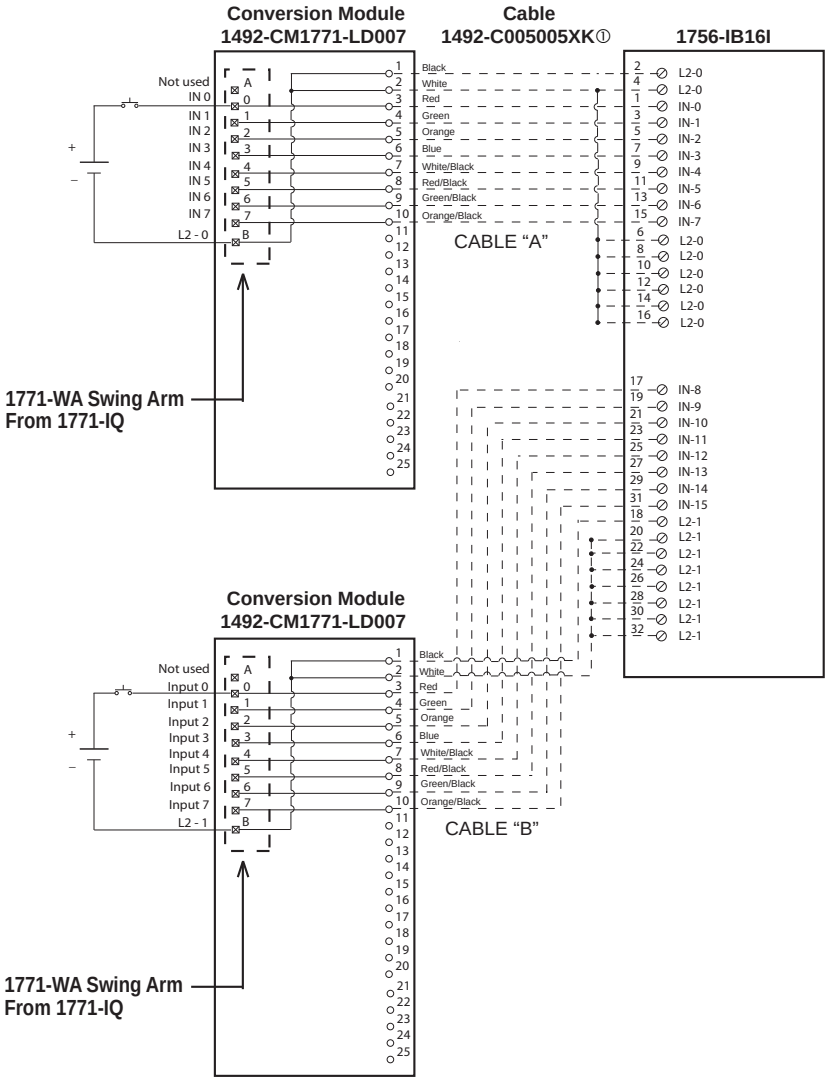

Conversion Module Installation and Application Considerations

① This Bul. 1492 cable consists of 2 separate cables (cable "A" and cable "B") wired to one 1756-IB16I RTB. Recommended cable lengths of 0.5 M / 0.5 M are shown. See table 2 for other lengths.

② The input delay times for the 1771-IQ module versus the 1756-IB16I module are as follows:

	1771-IQ	*1756-IB16I w/ 1492-C005005XK*
a) Off-to-On Delay	12ms (+/-14ms)	1ms max (plus selectable filter)
b) On-to-Off Delay	12ms (+/-7ms)	4ms max (plus selectable filter)

③ The 1771-IQ module is rated 5V to 30V DC. The 1756-IB16I module is rated 10V to 30V DC only.

④ Refer to your 1771-IQ and 1756-IB16I Installation Manual wiring schematics and diagrams for more details.

⑤ For Sourcing applications use 1492-CM1771-LD014. [Reference Doc: 41170-992 (Version 00)]

1771-IQ to 1756-IB16I— Sourcing

IMPORTANT	There are several key application considerations and system specifications (bottom of drawing) when using these components (conversion module, cable and input module). Read and understand these considerations before installation.

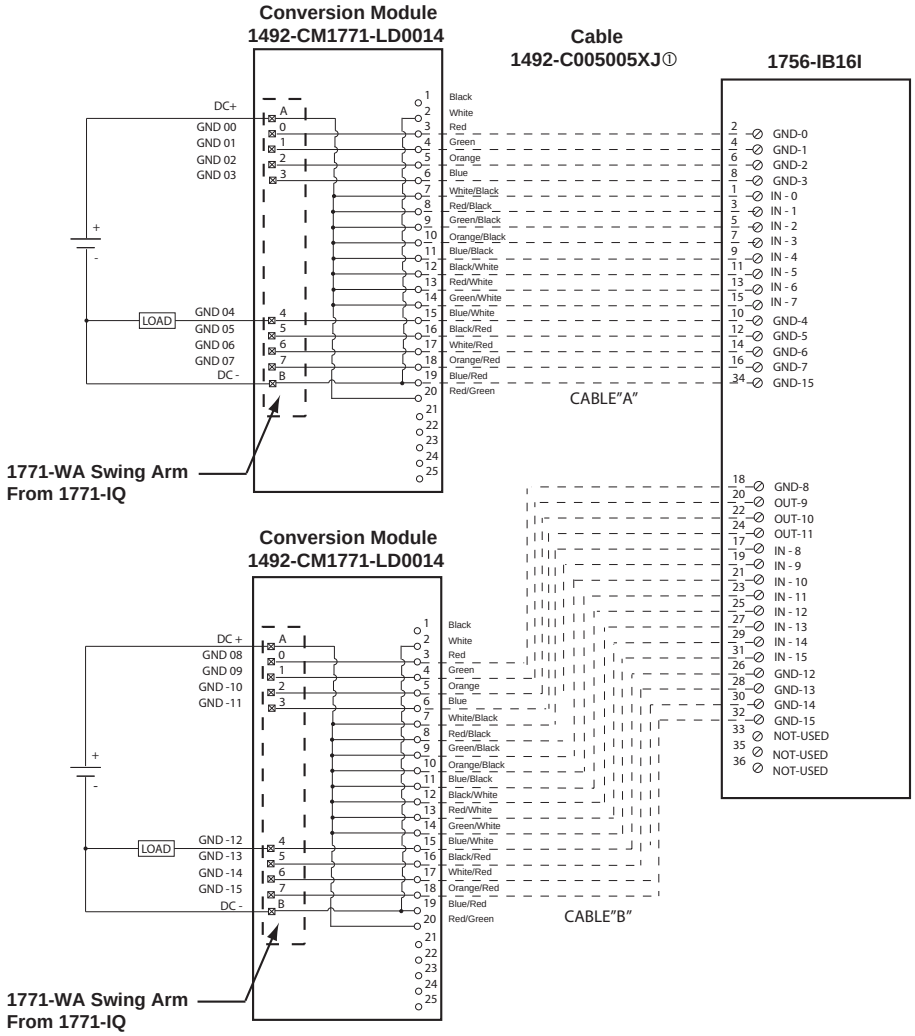

Conversion Module Installation and Application Considerations

① This Bul. 1492 cable consists of 2 separate cables (cable "A" and cable "B") wired to one 1756-IB16I RTB. Each cable can be either 0.5M or 1.0M (005=0.5M, 010=1.0M). Ensure that cable A and cable B are connected to the correct module in the conversion.

② The input delay times for the 1771-IQ module versus the 1756-IB16 module are as follows:

	1771-IQ	*1756-IB16I w/1492-C005005XJ*
a) Off-to-On Delay	12ms (+/-14ms)	1ms max (plus selectable filter)
b) On-to-Off Delay	12ms (+/-14ms)	4ms max (plus selectable filter)

③ The 1771-IQ module is rated 5V to 30V DC. The 1756-IB16I module is rated 10V to 30V SOURCING DC only.

④ Refer to your 1771-IQ and 1756-IB16I Installation Manual wiring schematics and diagrams for more details.

⑤ For Sinking applications use 1492-CM1771-LD007. [Reference Doc: 41170-991 (Version 00)]

1771-IQ16 to 1756-IB16I

IMPORTANT	There are several key application considerations and system specifications (bottom of drawing) when using these components (conversion module, cable and input module). Read and understand these considerations before installation.

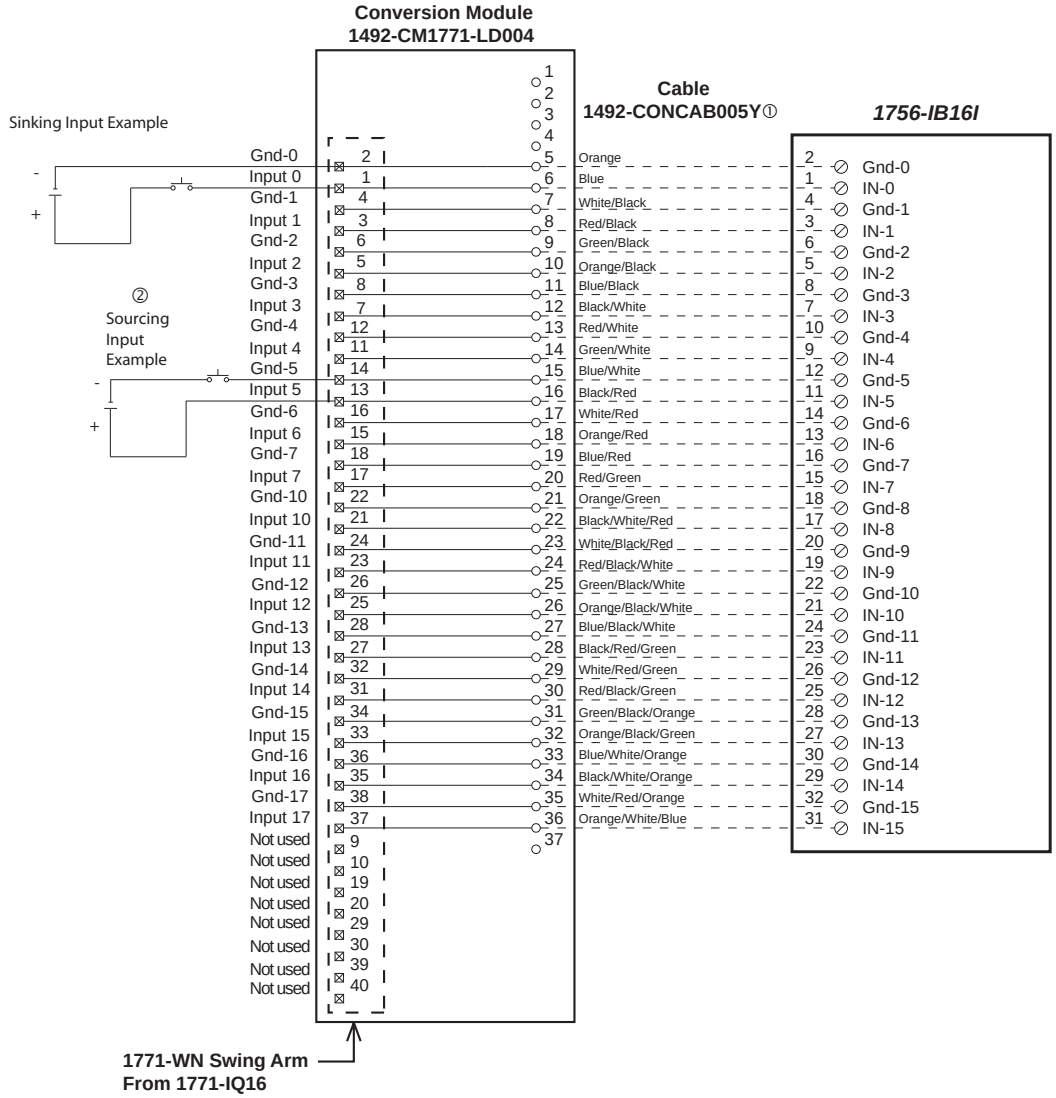

Conversion Module Installation and Application Considerations

① The input delay times for the 1771-IQ16 module versus 1756-IB16I module are as follows:

	1771-IQ16	*1756-IB16I*
a) Off-to-On Delay	0.57ms	1ms max (plus selectable filter)
b) On-to-Off Delay	0.57ms	4ms max (plus selectable filter)

② Both the 1771-IQ16 and 1756-IB16I allow operation with sourcing inputs. Refer to installation Instructions for details.

③ Refer to your 1771-IQ16 and 1756-IH16I Installation Manual wiring schematics and diagrams for more details.

[Reference Doc: 41170-933 (Version 02)]

1771-IT to 1756-IB16

IMPORTANT	There are several key application considerations and system specifications (bottom of drawing) when using these components (conversion module, cable and input module). Read and understand these considerations before installation.

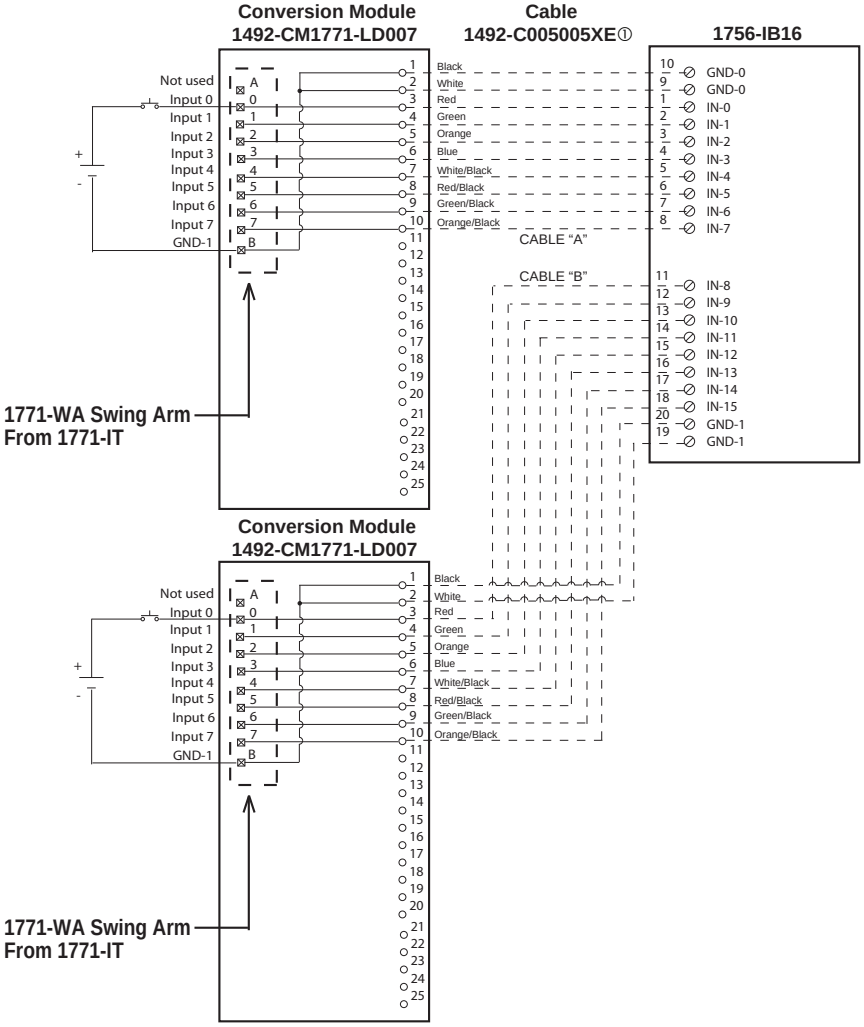

Conversion Module Installation and Application Considerations

① This Bul. 1492 cable consists of 2 separate cables (cable "A" and cable "B") wired to one 1756-IB16 RTB. Recommended cable lengths of 0.5 M / 0.5 M are shown. See table 2 for other lengths.

② The input delay times for the 1771-IT module versus the 1756-IB16 module are as follows:

	1771-IT	*1756-IB16 w/ 1492-C005005XE*
a) Off-to-On Delay	0.6ms (+/-0.2ms)	1ms max (plus selectable filter)
b) On-to-Off Delay	0.6ms (+/-0.2ms)	2ms max (plus selectable filter)

③ The 1771-IT module is rated 24V DC. The 1756-IB16 module is rated 24V DC only.

④ Refer to your 1771-IT and 1756-IB16 Installation Manual wiring schematics and diagrams for more details.

[Reference Doc: 41170-999 (Version 00)]

1771-IV to 1756-IV16

IMPORTANT	There are several key application considerations and system specifications (bottom of drawing) when using these components (conversion module, cable and input module). Read and understand these considerations before installation.

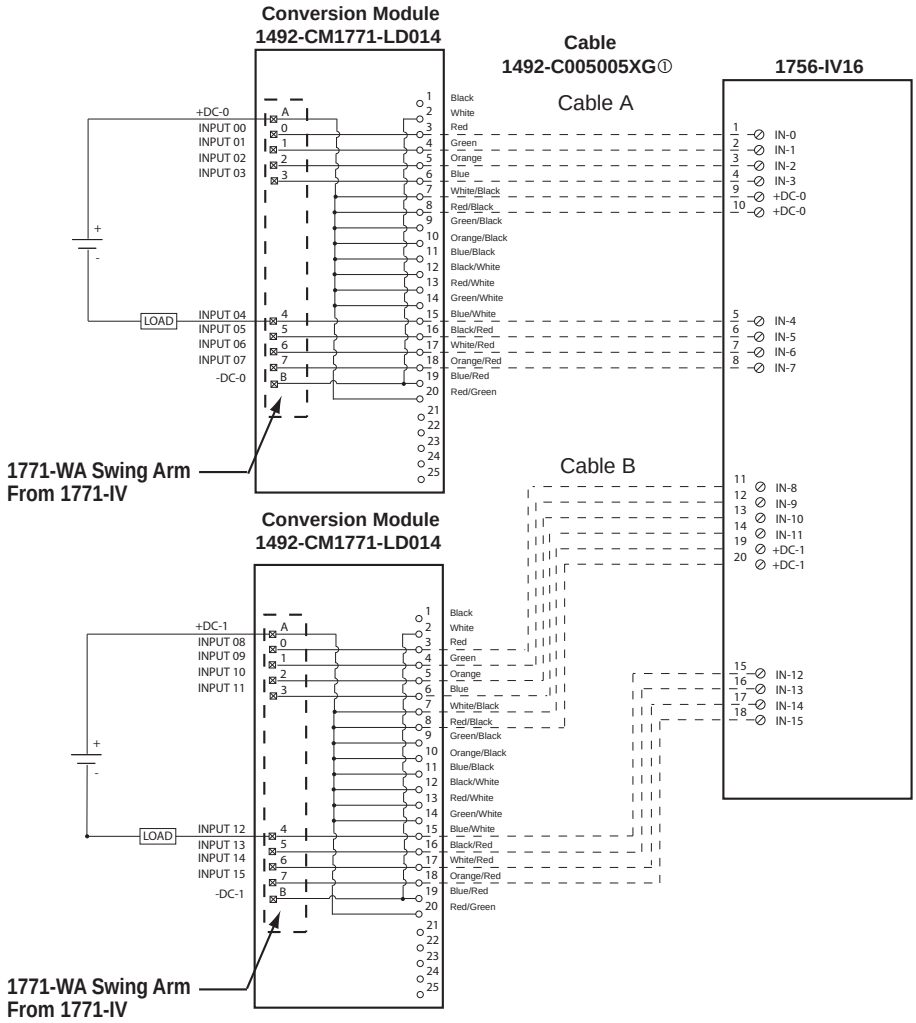

Conversion Module Installation and Application Considerations

① This Bul. 1492 cable consists of 2 separate cables (cable "A" and cable "B") wired to one 1756-IV16 RTB. Each cable can be either 0.5M or 1.0M (005=0.5M, 010=1.0M). Ensure that cable A and cable B are connected to the correct module in the conversion.

② The input delay times for the 1771-IV module versus the 1756-IV16 module are as follows:

	1771-IV	*1756-IV16 w/1492-C005005XG*
a) Off-to-On Delay	15ms (+/-7ms)	1ms max (plus selectable filter)
b) On-to-Off Delay	15ms (+/-7ms)	2ms max (plus selectable filter)

③ The 1771-IV module is rated 12 To 24V DC. The 1756-IV16 module is rated 10V To 30V DC only.

④ Refer to your 1771-IV and 1756-IV16 Installation Manual wiring schematics and diagrams for more details.

[Reference Doc: 41170-989 (Version 00)]

1771-IVN to 1756-IV32

IMPORTANT	There are several key application considerations and system specifications (bottom of drawing) when using these components (conversion module, cable and input module). Read and understand these considerations before installation.

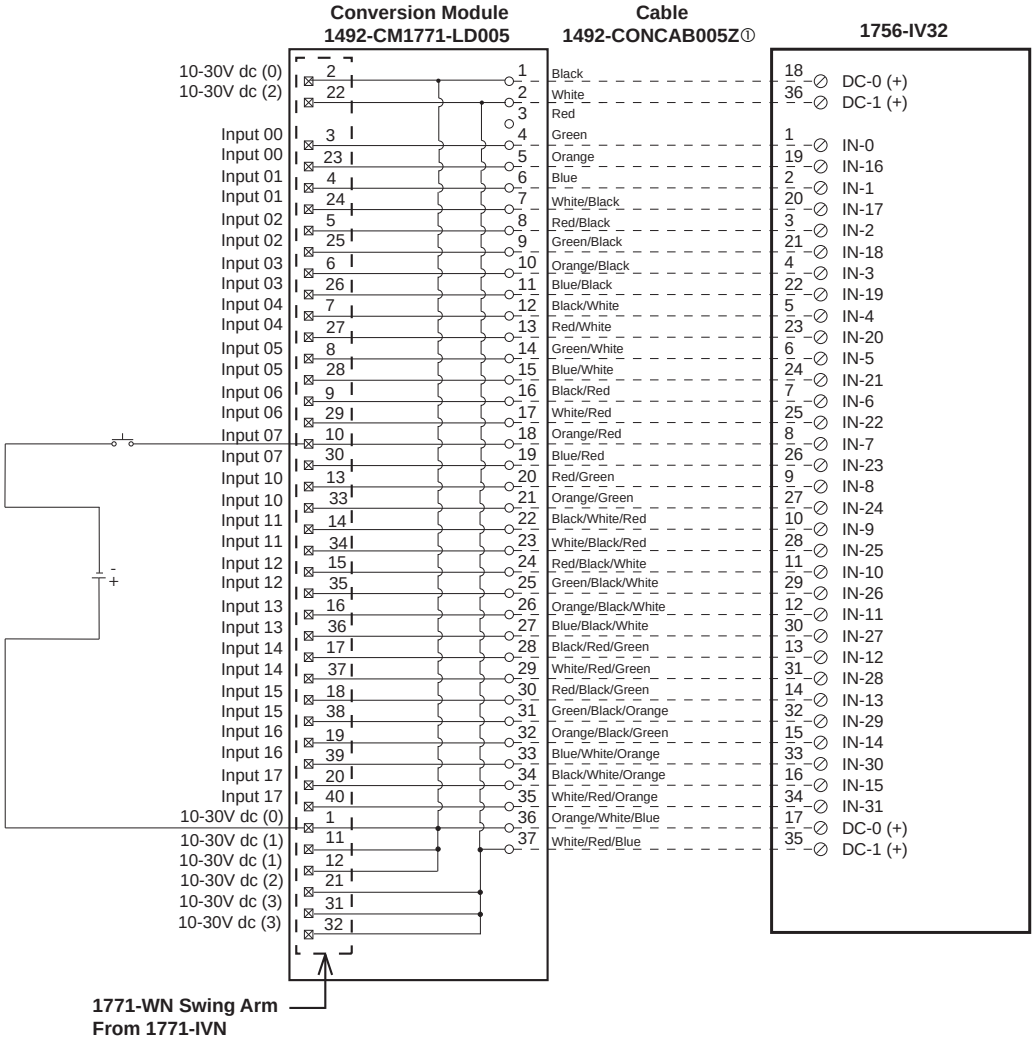

Conversion Module Installation and Application Considerations

① The input delay times for the 1771-IVN module versus 1756-IV32 module are as follows:

	1771-IVN	*1756-IV32*
a) Off-to-On Delay	6ms (+/-2ms)	1ms (plus selectable filter)
b) On-to-Off Delay	6ms (+/-2ms)	2ms (plus selectable filter)

② The 1771-IVN has 4 groups (allowing 4 seperate power supplies) and the 1756-IV32 has 2 groups. This module/cable combination ties Groups 0 & 1 from the 1771-IVN to Group 0 on the 1756-IV32 and it ties Groups 2 & 3 from the 1771-IVN to Group 1 on the 1756-IV32.Field wiring modification must be made to accommodate this if multiple supplies were used. If 4 supplies were used, 2 must be removed.

③ Refer to your 1771-IVN and 1756-IV32 Installation Manual wiring schematics and diagrams for more details.

[Reference Doc: 41170-934 (Version 02)]

Notes:

1771-OA to 1756-OA8E

IMPORTANT	There are several key application considerations and system specifications (bottom of drawing) when using these components (conversion module, cable and input module). Read and understand these considerations before installation.

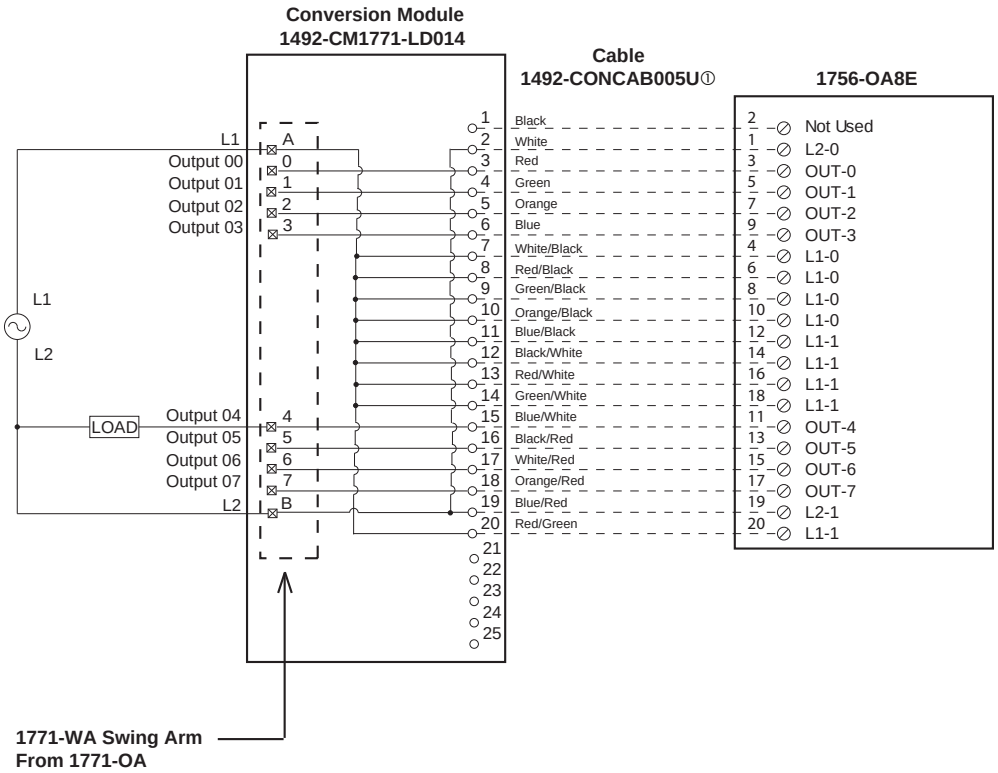

Conversion Module Installation and Application Considerations

① This Bul. 1492 cable consists of a cable wired to one 1756-OA8E RTB. Recommended cable lengths of 0.5M or 1.0M (005=0.5M, 010=1.0M). See table 2 for other lengths.

② The 1771-OA module output current limits versus 1756-OA8E limits are as follows:

	1771-OA	*1756-OA8E w/ 1492-CONCAB005U*
a) Current/Point	1.5A	2A
b) Current/Module	6A	4A @ 60°C
c) Surge Current/Pt	4A for 8.3ms	20A for 43 ms

③ The 1771-OA has eight (8) 2A, 250V fuses - 1 per output. The 1756-OA8E is electronically fused per point. Refer to the 1756-OA8E Installation Manual for details on electronic fusing.

④ Refer to your 1771-OA and 1756-OA8E Installation Manual wiring schematics and diagrams for more details. Ensure 1756 output module ratings are not exceeded. [Reference Doc: 41170-943 (Version 01)]

1771-OAD to 1756-OA16

IMPORTANT	There are several key application considerations and system specifications (bottom of drawing) when using these components (conversion module, cable and input module). Read and understand these considerations before installation.

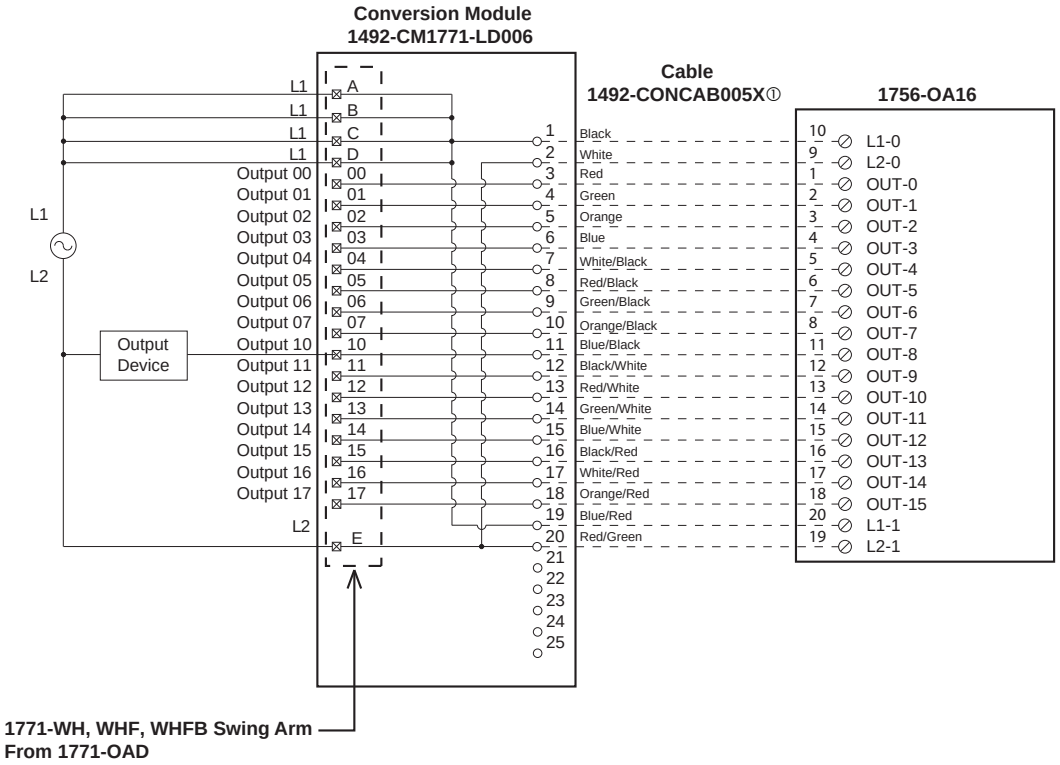

Conversion Module Installation and Application Considerations

① This Bul. 1492 cable consists of a cable wired to one 1756-OA16 RTB. Recommended cable lengths of 0.5M or 1.0M (005=0.5M, 010=1.0M). See table 2 for other lengths.

② The 1771-OAD module output current limits versus 1756-OA16 limits are as follows:

	1771-OAD	*1756-OA16 w/ 1492-CONCAB005X*
a) Current/Point	2A	0.5A
b) Current/Module	8A	4A
c) Surge Current/point	25A for 100ms	5A for 43ms

③ The L2 terminal (Terminal E) on the 1771-OAD module was an optional connection, but it is required for the 1756-OA16. This connection must be added if it was not connected.

④ The 1771-OAD is rated 10V to 138V AC. The 1756-OA16 is rated 74V to 256V AC.

⑤ Refer to your 1771-OAD and 1756-OA16 Installation Manual wiring schematics and diagrams for more details. Ensure 1756 output module ratings are not exceeded. [Reference Doc: 41170-935 (Version 01)]

1771-OAN to 1756-OA16

IMPORTANT	There are several key application considerations and system specifications (bottom of drawing) when using these components (conversion module, cable and input module). Read and understand these considerations before installation.

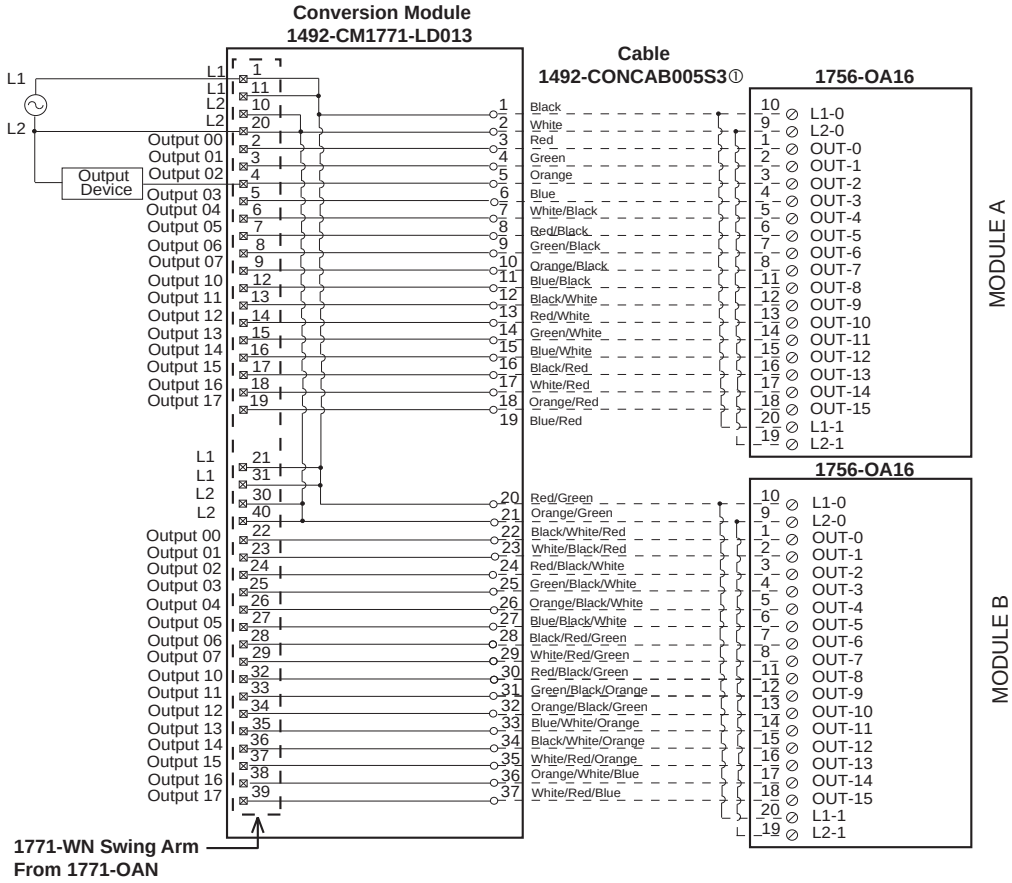

Conversion Module Installation and Application Considerations

① This Bul. 1492 cable consists of a cable wired to two 1756-OA16 RTB. Recommended cable lengths of 0.5M or 1.0M (005=0.5M, 010=1.0M). See table 2 for other lengths.

② The 1771-OAN module output current limits versus 1756-OA16 limits are as follows:

	1771-OAN	*1756-OA16 w/ 1492-CONCAB005S3*
a) Current/Point	1A	0.5A
b) Current/Module	8A (32 pts)	2A (16 pts)
c) Surge Current/Point	10A for 25ms	5A for 43ms

③ The 1771-OAN has 4 groups (allowing 4 separate power supplies). This module/cable combination ties all 4 groups from the 1771-OAN together. Field wiring modification must be made to accommodate this if mulitple supplies were used. If more than 1 supply was used, all but 1 of the power supplies must be removed.

④ The 1771-OAN did not allow connections for L2, however the 1756-OA16 requires an L2 connection for proper operation. The 1771-OAN did not use terminals 10, 20, 30, 40. These terminals have been reassigned for an L2 connection in this application. The installer must rewire L2 to one of these terminals.

⑤ Refer to your 1771-OAN and 1756-OA16 Installation Manual wiring schematics and diagrams for more details. Ensure 1756 output module ratings are not exceeded.

⑥ This configuration uses two (2) 1756-OA16 output modules to replace a single 1771-OAN output module. This may require the use of a larger 1756 I/O chassis and conversion mounting assembly. Ensure there is sufficient panel space to allow for this possibility.

[Reference Doc: 41170-942 (Version 02)]

1771-OB to 1756-OB16D

IMPORTANT	There are several key application considerations and system specifications (bottom of drawing) when using these components (conversion module, cable and input module). Read and understand these considerations before installation.

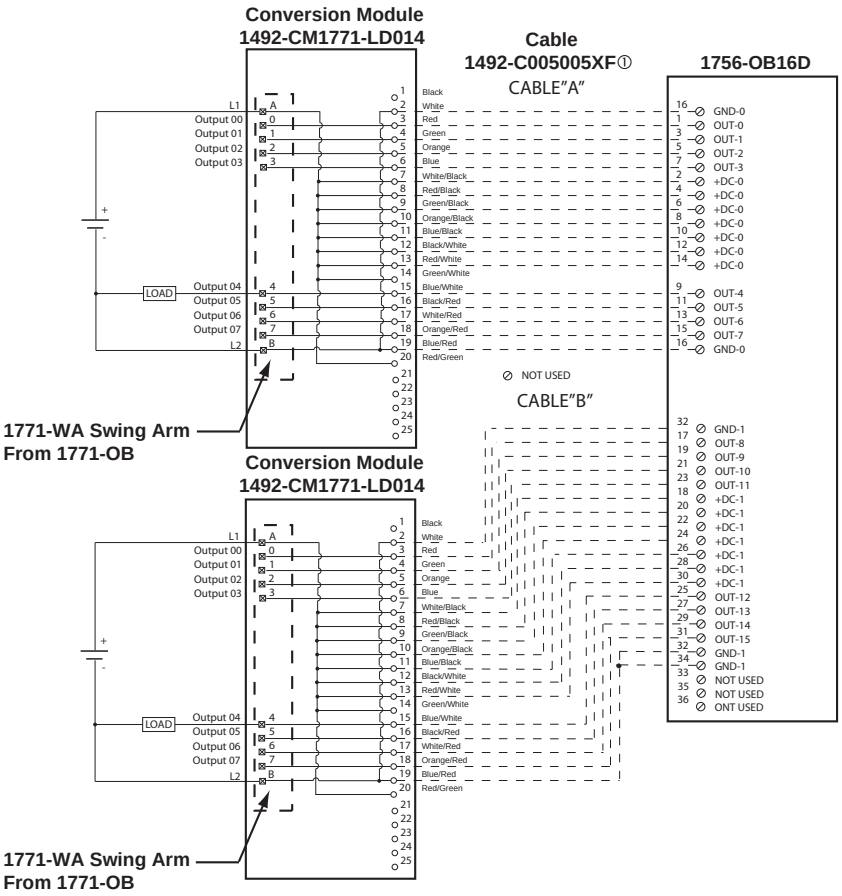

Conversion Module Installation and Application Considerations

① This Bul. 1492 cable consists of 2 separate cables (cable "A" and cable "B") wired to one 1756-OB16D RTB. Each cable can be either 0.5M or 1.0M (005=0.5M, 010=1.0M). Ensure that cable A and cable B are connected to the correct module in the conversion.

② The 1771-OB module output current limits versus 1756-OB16D limits are as follows:

	1771-OB	*1756-OB16D w/ 1492-C005005XF*
a) Current/Point	1.5A	2A
b) Current/Module	6A	4A @ 60°C
c) Surge Current/Point	4A for 8.3ms	4A for 10ms

③ The 1771-OB has eight (8) 2A, 250V fuses - 1 per output. The 1756-OB16D is a DIAGNOSTIC MODULE. Refer to the 1756-OB16D Installation Manual for details on diagnostics.

④ Refer to your 1771-OB and 1756-OB16D Installation Manual wiring schematics and diagrams for more details. Ensure 1756 output module ratings are not exceeded. [Reference Doc: 41170-988 (Version 00)]

1771-OBD to 1756-OB16E

IMPORTANT	There are several key application considerations and system specifications (bottom of drawing) when using these components (conversion module, cable and input module). Read and understand these considerations before installation.

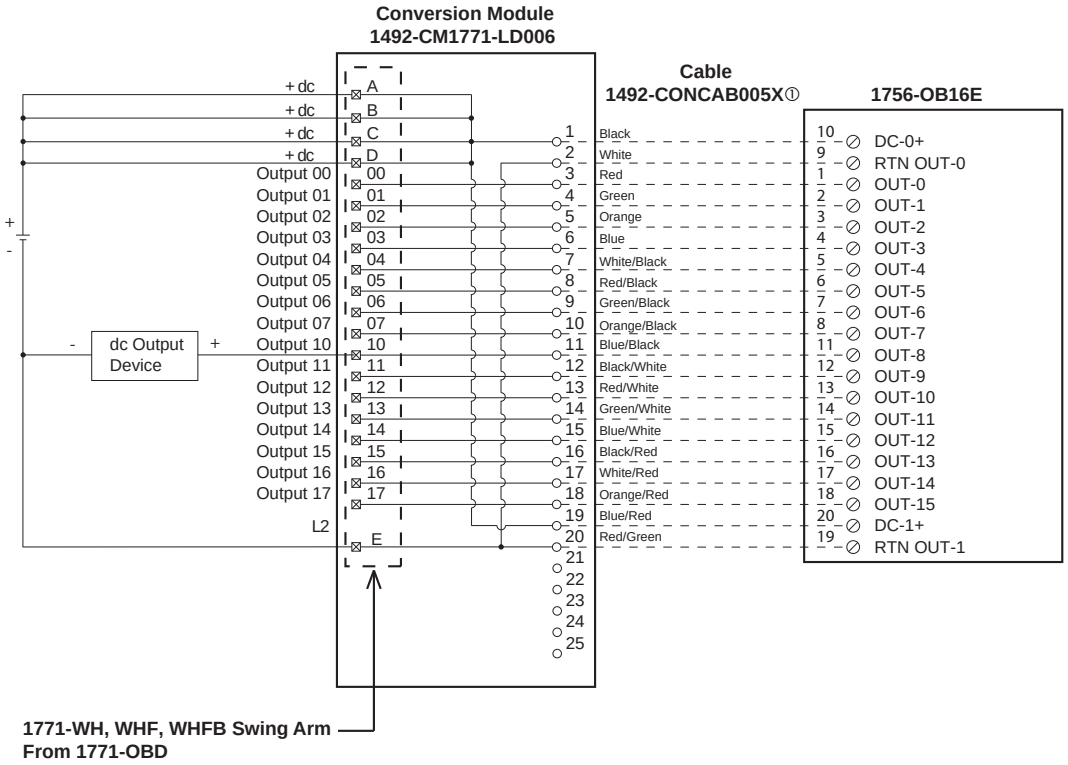

Conversion Module Installation and Application Considerations

① This Bul. 1492 cable consists of a cable wired to one 1756-OA16 RTB. Recommended cable lengths of 0.5M or 1.0M (005=0.5M, 010=1.0M). See table 2 for other lengths.

② The 1771-OBD module output current limits versus 1756-OB16E limits are as follows:

	1771-OBD	*1756-OB16E w/ 1492-CONCAB005X*
a) Current/Point	2A	1A
b) Current/Module	8A	4A
c) Surge Current/point	4A for 10ms	2A for 10ms

③ The 1771-OBD has a single 10A, 250V rectifier fuse (1/4 x 1 1/4 inch). The 1756-OB16E is electronically fused per group. Refer to the 1756-OB16E Installation Manual for details on electronic fusing.

④ The 1771-OBD is rated 10V to 60V DC. The 1756-OB16E is rated 10V to 31.2V DC. If the load source voltage is greater than 30V DC, then use the 1756-OC8 with the 1492-CM1771-LD008F conversion module.

⑤ Refer to your 1771-OBD and 1756-OB16E Installation Manual wiring schematics and diagrams for more details. Ensure 1756 output module ratings are not exceeded. [Reference Doc: 41170-936 (Version 01)]

1771-OBD to 1756-OC8

IMPORTANT	There are several key application considerations and system specifications (bottom of drawing) when using these components (conversion module, cable and input module). Read and understand these considerations before installation.

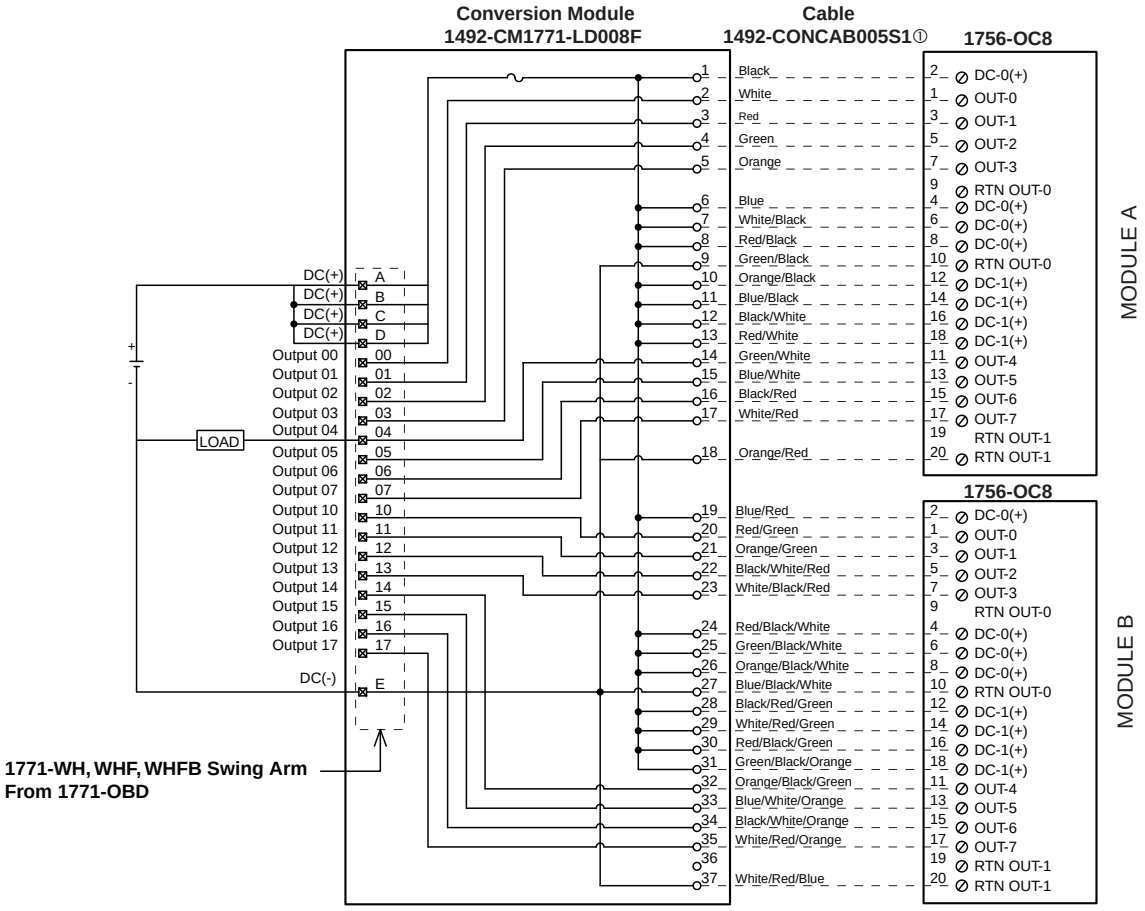

Conversion Module Installation and Application Considerations

① This Bul. 1492 cable consists of a cable wired to two 1756-OC8 RTB. Recommended cable lengths of 0.5M or 1.0M (005=0.5M, 010=1.0M). See table 2 for other lengths.

② The 1771-OBD module output current limits versus 1756-OC8 limits are as follows:

	1771-OBD	*1756-OC8 w/ 1492-CONCAB005S1*
a) Current/Point	2A	2A
b) Current /Module	8A	8A
c) Surge Current /Point	4A for 10ms	4A for 10ms

③ The 1771-OBD has a single 10A, 250V rectifier fuse (1/4 x 1 1/4 inch). The 1756-OC8 is NOT fused ,as such a 2AG fuse clip and 10A fuse is provided on the 1492-CM1771-LD008F conversion module.

④ The 1771-OBD is rated 10V to 60V DC. The 1756-OC8 is rated 30V to 60V DC. If the load source voltages is less than 30V DC, then use 1756-OB16E with the 1492-CM1771-LD006 conversion module.

⑤ This configuration uses two(2) 1756-OC8 output modules to replace a single 1771-OBD output module. This may require the use of a larger 1756 I/O chassis and conversion mounting assembly. Ensure there is sufficient panel space to allow for this possibility.

⑥ Refer to your 1771-OBD and 1756-OC8 Installation Manual wiring schematics and diagrams for more details. Ensure 1756 output module ratings are not exceeded. [Reference Doc: 41170-937 (Version 01)]

1771-OBDS to 1756-OB16E

IMPORTANT	There are several key application considerations and system specifications (bottom of drawing) when using these components (conversion module, cable and input module). Read and understand these considerations before installation.

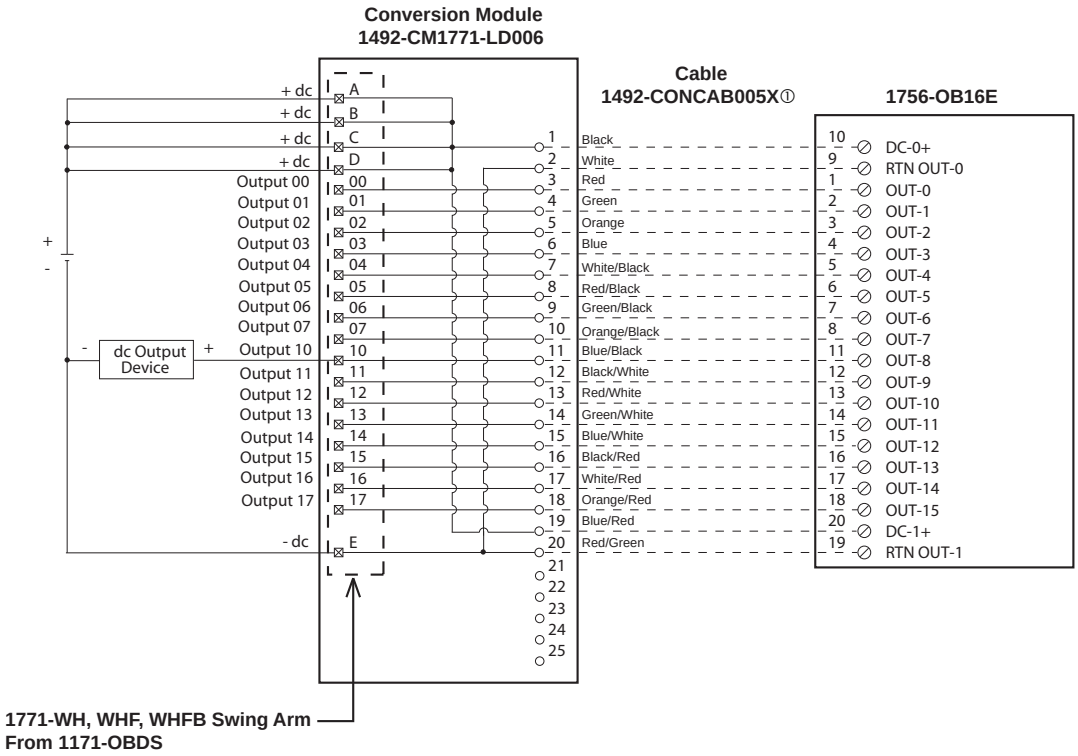

Conversion Module Installation and Application Considerations

① This Bul. 1492 cable consists of a cable wired to one 1756-OB16E RTB. Recommended cable lengths of 0.5M or 1.0M (005=0.5M, 010=1.0M). See table 2 for other lengths.

② The 1771-OBDS module output current limits versus 1756-OB16E limits are as follows:

	1771-OBDS	*1756-OB16E w/ 1492-CONCAB005X*
a) Current/Point	1A	1A
b) Current/Module	8A	8A
c) Surge Current/Point	4A for 10ms	2A for 10ms

③ The 1771-OBDS has a single 12A, 250V rectifier fuse (1/4 x 1-1/4 inch). The 1756-OB16E is electronically fused per group. Refer to the 1756-OB16E Installation Manual for details on electronic fusing.

④ The 1771-OBDS is rated 10V to 40V DC. The 1756-OB16E is rated 10V to 31.2V DC. If the load source voltage is greater than 30V DC, then use the 1756-OC8 with the 1492-CM1771-LD008F conversion module.

⑤ Refer to your 1771-OBDS and 1756-OB16E Installation Manual wiring schematics and diagrams for more details. Ensure 1756 output module ratings are not exceeded. [Reference Doc: 41171-005 (Version 00)]

1771-OBN to 1756-OB32

IMPORTANT	There are several key application considerations and system specifications (bottom of drawing) when using these components (conversion module, cable and input module). Read and understand these considerations before installation.

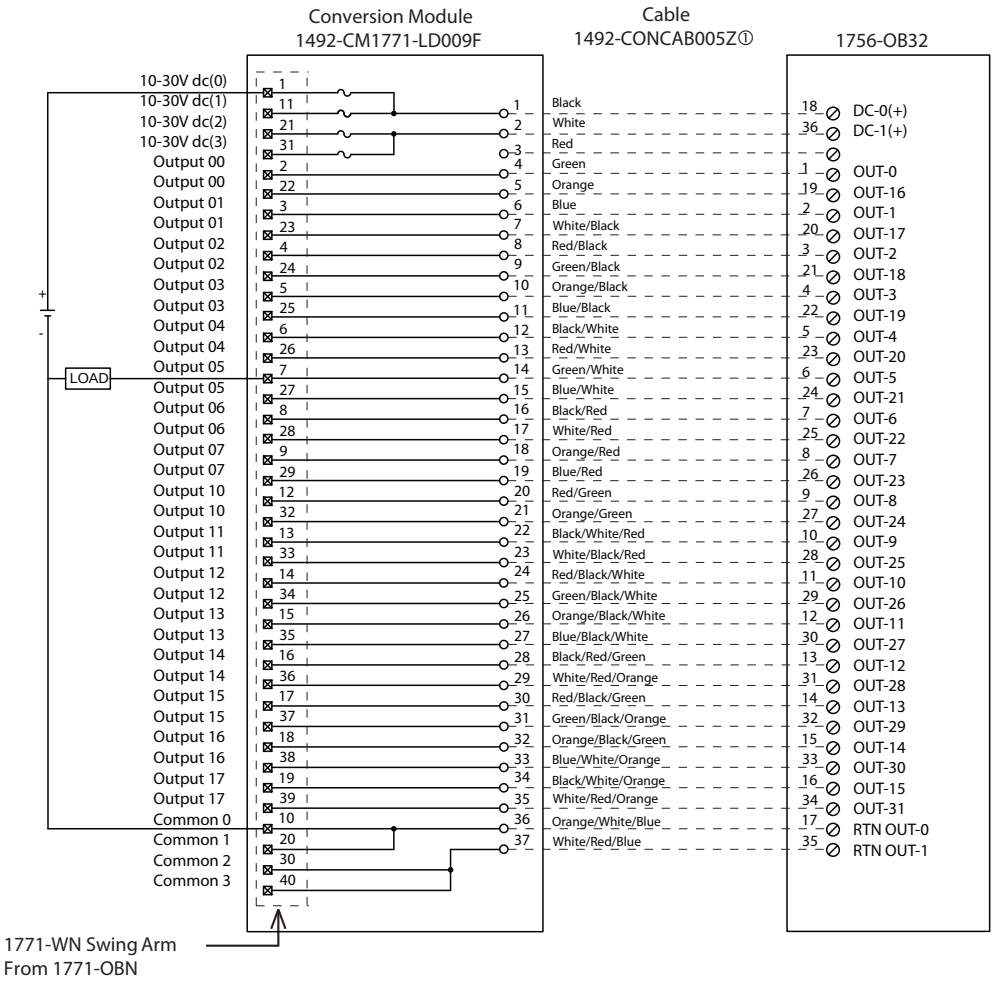

Conversion Module Installation and Application Considerations

①The 1771-OBN module output current limits versus 1756-OB32 limits are as follows:

	1771-OBN	1756-OB32w/1492-CONCAB005Z
a) Current/Point	0.5A	0.35A @ 60˚C
b) Current/Module	8A	6A @ 60˚C
c) Surge Current/Point	2A for 10ms	1A for 10ms

② The 1771-OBN has four (4) 4A, 250V rectifier fuses. The 1756-OB32 is NOT fused, as such four (4) 2AG fuse clips and 4A fuses are provided on the 1492-CM1771-LD009F conversion module.

③ The 1492-CONAB005Z is limited to 3A per pin.

④ The 1771-OBN has 4 groups (allowing 4 separate power supplies) and the 1756-OB32 has 2 groups. This module/cable combination ties Groups 0 & 1 from the 1771-OBN to Group 0 on the 1756-OB32 and Groups 2 & 3 from the 1771-OBN to Group 1 on the 1756-OB32. Field wiring modification must be made to accommodate this if multiple supplies were used. If 4 supplies were used, 2 must be removed.

⑤ Refer to your 1771-OBN and 1756-OB32 Installation Manual wiring schematics and diagrams for more details. Ensure 1756 output module ratings are not exceeded.

41170-938 (01)

1771-OC to 1756-OC8

IMPORTANT	There are several key application considerations and system specifications (bottom of drawing) when using these components (conversion module, cable and input module). Read and understand these considerations before installation.

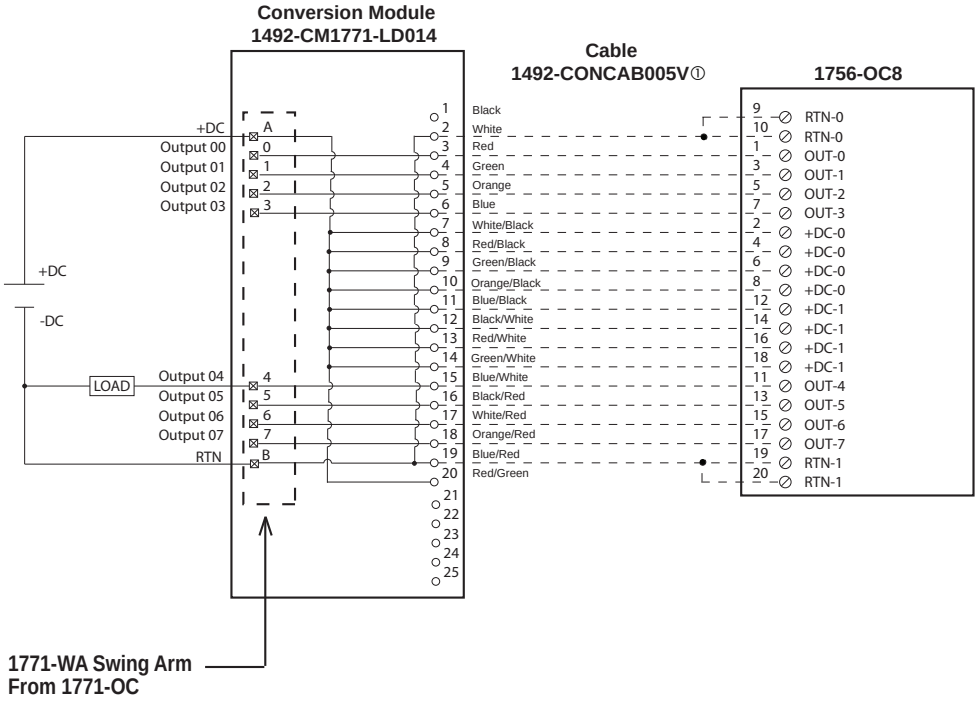

Conversion Module Installation and Application Considerations

① This Bul. 1492 cable consists of a cable wired to one 1756-OC8 RTB. Recommended cable lengths of 0.5M or 1.0M (005=0.5M, 010=1.0M). See table 2 for other lengths.

② The 1771-OC module output current limits versus 1756-OC8 limits are as follows:

	1771-OC	*1756-OC8 w/ 1492-CONCAB005V*
a) Current/Point	1.5A	2A
b) Current/Module	8A	8A @ 60°C
c) Surge Current/Point	4A for 1.0ms	4A for 10ms

③ The 1771-OC has eight (8) 2A, 250V fuses - 1 per output. Refer to the 1756-OC8 Installation Manual for details.

④ Refer to your 1771-OC and 1756-OC8 Installation Manual wiring schematics and diagrams for more details. Ensure 1756 output module ratings are not exceeded. [Reference Doc: 41171-020 (Version 00)]

1771-OD to 1756-OA16I

IMPORTANT	There are several key application considerations and system specifications (bottom of drawing) when using these components (conversion module, cable and output module). Read and understand these considerations before installation. In addition, refer to the current draw requirements of the existing loads for this configuration to ensure they are within the current ratings of the 1756 output module.

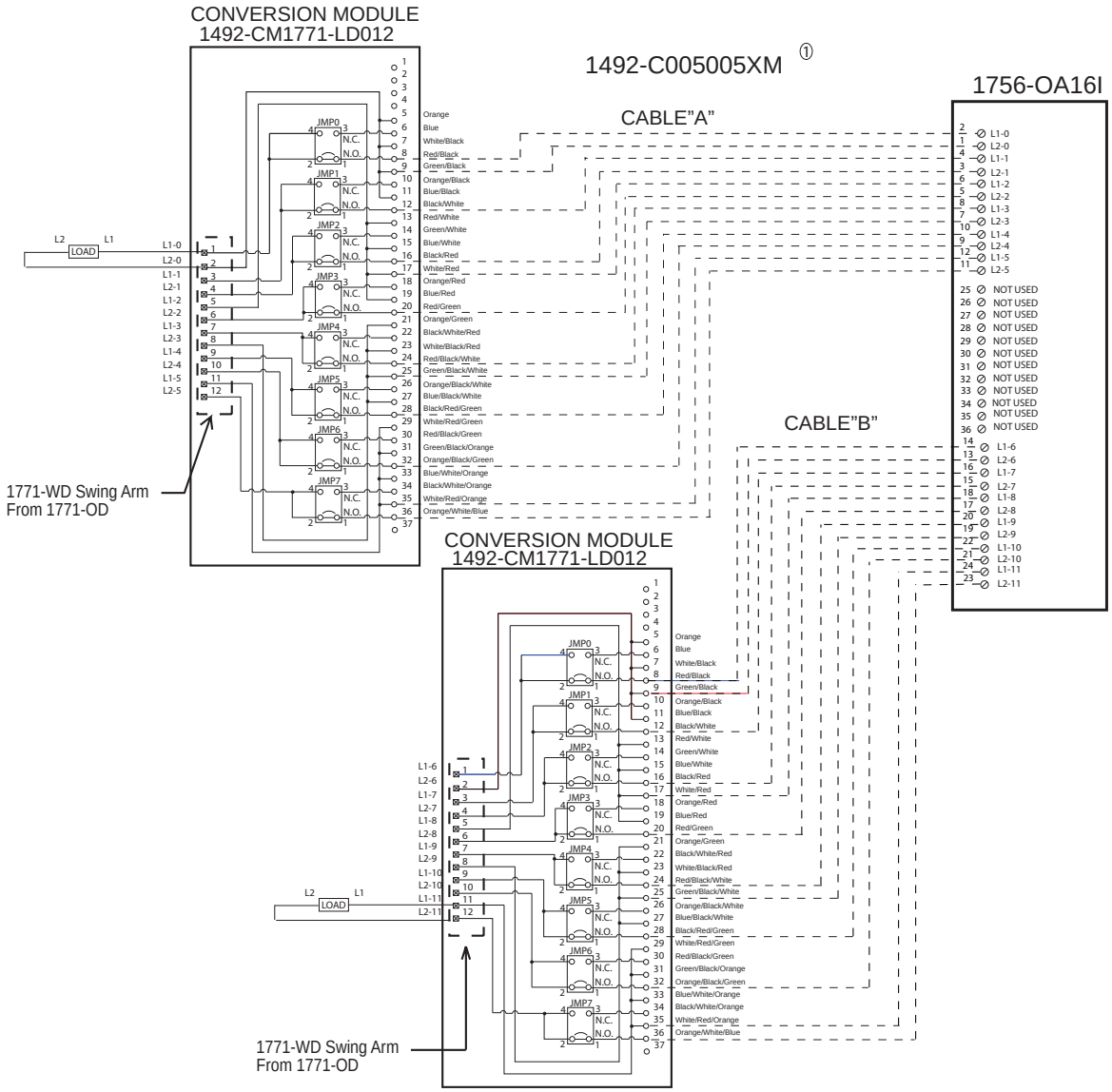

CONVERSION MODULE INSTALLATION AND APPLICATION CONSIDERATIONS

① This Bul. 1492 cable consists of 2 separate cables (cable "A" and "B") wired to one 1756-IM16I RTB. Each cable can be either 0.5M or 1.0M (005=0.5M, 010=1.0M). Ensure that cable A and cable B are connected to the correct module in the conversion.

② The 1771-OD module output resistive current limits versus 1756-OA16I limits are as follows:
(NOTE: for switching and inductive current ratings, refer to the modules Installation Instructions)

	1771-OD	***1756-OA16I w/ 1492-CONCAB005XM***
a) Current/Point	0.2A @ 138V AC	2A @ 240V AC
	1A @ 30V DC	2A @ 30V DC
	0.25A@ 125V DC	0.25A @ 125V DC

② The 1492-COO5005XM is limited to 3A per pin.

③ The 1771-OD module had a jumper selection of N.O. and N.C. outputs. The 1756-OA16I has both N.O. and N.C. outputs, but selection is by wiring termination on the 1756 swing arm. The 1492-CM1771-LD012 conversion module replaces the functionality of the 1771-OD jumpers with eight jumpers (JMP0 through JMP7). In the default position, the output will be N.O.. If a N.C. output is required, change the jumper from pins 1-2 to pins 3-4.

④ Refer to your 1771-OD and 1756-OA16I Installation Manual wiring schematics and diagrams for more details. Ensure 1756 output module ratings are not exceeded.

41170-994 (01)

1771-OD16 to 1756-OA16I

IMPORTANT	There are several key application considerations and system specifications (bottom of drawing) when using these components (conversion module, cable and input module). Read and understand these considerations before installation.

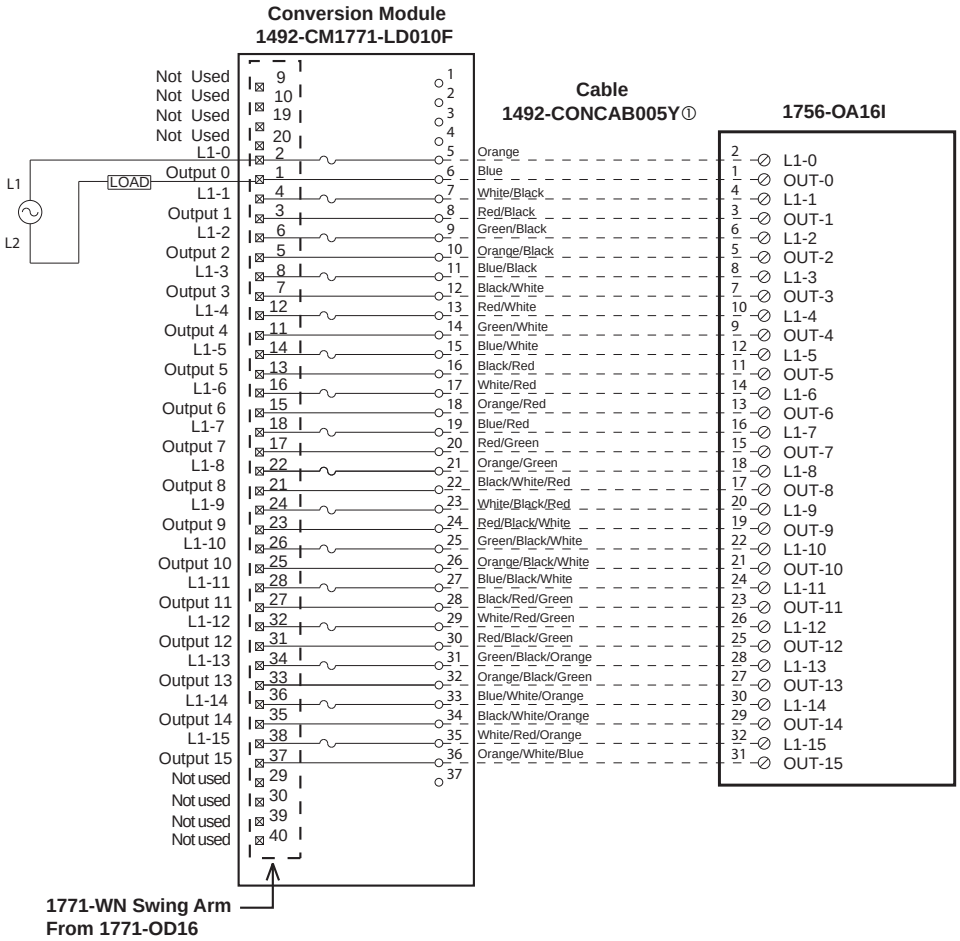

Conversion Module Installation and Application Considerations

① This Bul. 1492 cable consists of a cable wired to one 1756-OA16I RTB. Recommended cable lengths of 0.5M or 1.0M (005=0.5M, 010=1.0M). See table 2 for other lengths.

② The 1771-OD16 module output current limits versus 1756-OA16I limits are as follows:

	1771-OD16	*1756-OA16I w/ 1492-CONCAB005Y*
a) Current/Point	2A	1A
b) Current/Module	8A	4A
b) Surge Current/Point	20A for 100ms	20A for 43ms

③ The 1771-OD16 has sixteen (16) 3A ,250V recifier fuses. The 1756-OA16I is NOT fused,as such sixteen (16) 2AG fuse clips are provided on the 1492-CM1771-LD010F conversion module. Max fuse rating is 1.5A based on 1756-OA16I.

④ The 1771-OD16 is rated 74V to 138V AC and 105V to 138V DC. The 1756-OA16I is rated 74V to 265V AC. A1756 isolated output module with an equivalent DC voltage range to convert the1771 -OD16 is not available.

⑤ Refer to your 1771-OD16 and 1756-OA16I Installation Manual wiring schematics and diagrams for more details. Ensure 1756 output module rating are not exceeded. [Reference Doc: 41170-939 (Version 01)]

1771-ODD to 1756-OA16I

IMPORTANT	There are several key application considerations and system specifications (bottom of drawing) when using these components (conversion module, cable and input module). Read and understand these considerations before installation.

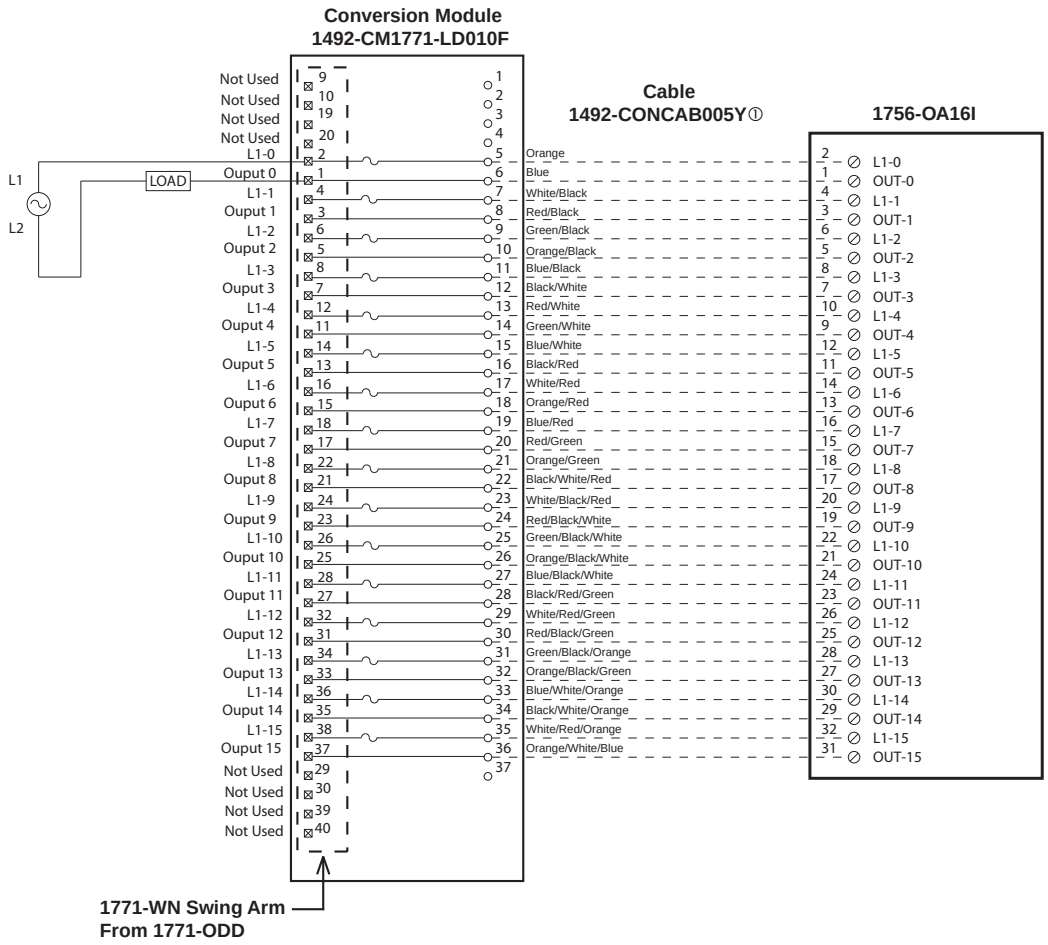

Conversion Module Installation and Application Considerations

① This Bul. 1492 cable consists of a cable wired to one 1756-OA16I RTB. Recommended cable lengths of 0.5M or 1.0M (005=0.5M, 010=1.0M). See table 2 for other lengths.

② The 1771-ODD module output current limits versus 1756-OA16I limits are as follows:

	1771-ODD	*1756-OA16I w/ 1492-CONCAB005Y*
a) Current/Point	2A	2A
b) Current/Module	8A	5A
c) Surge Current/Point	20A for 100ms	20A for 43ms

③ The 1771-ODD has sixteen (16) 3A, 250V rectifier fuses. The 1756-OA16I is NOT fused, as such sixteen(16) 2AG fuses and clips are provided on the 1492-CM1771-LD010F conversion module. Max fuse rating is 1.5A based on 1756-OA16I.

④ The 1771-ODD is rated 74V to 138V AC. The 1756-OA16I is rated 74V to 265V AC.

⑤ Refer to your 1771-ODD and 1756-OA16I Installation Manual wiring schematics and diagrams for more details. Ensure 1756 output module ratings are not exceeded. [Reference Doc: 41171-009 (Version 00)]

1771-ODZ to 1756-OA16I

IMPORTANT	There are several key application considerations and system specifications (bottom of drawing) when using these components (conversion module, cable and input module). Read and understand these considerations before installation.

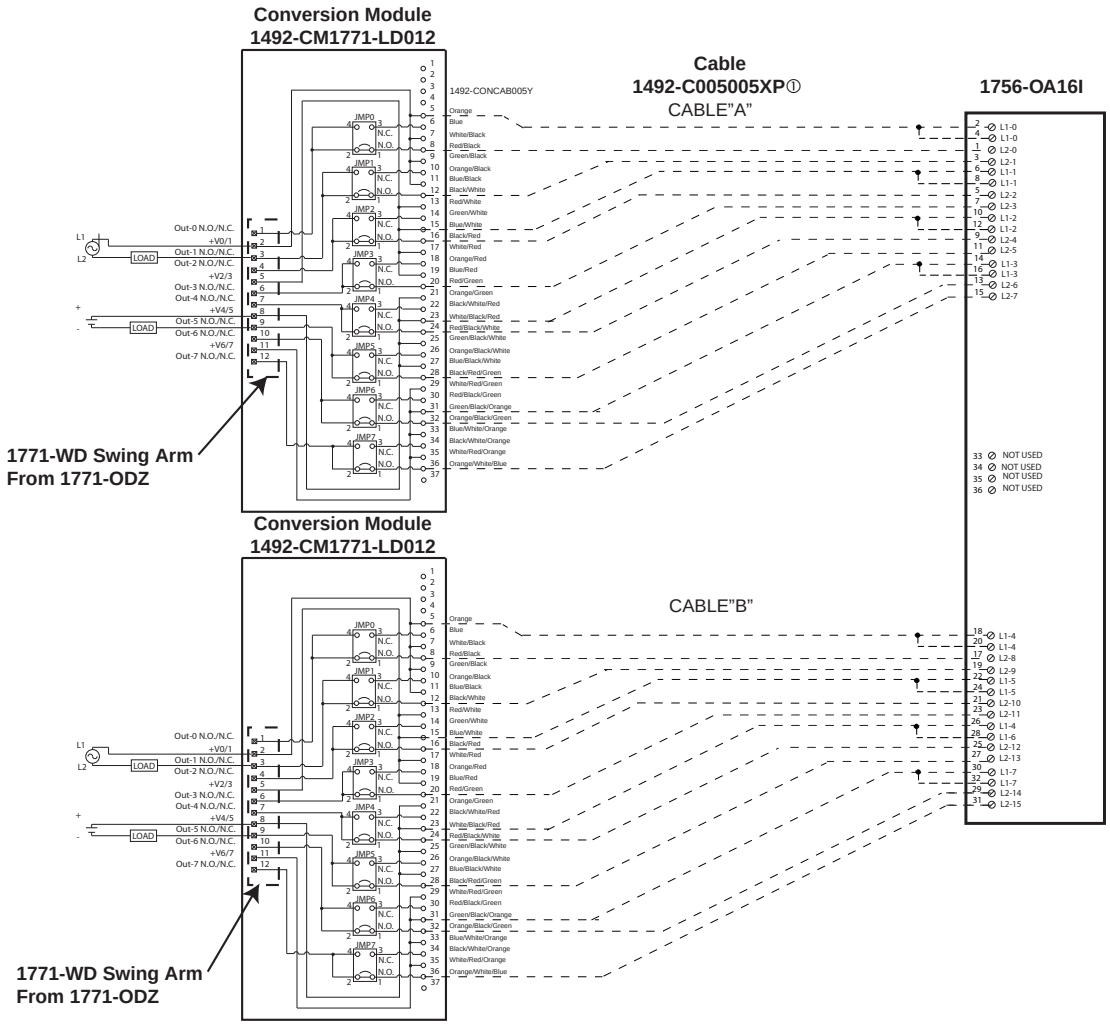

Conversion Module Installation and Application Considerations

① This Bul. 1492 cable consists of 2 separate cables (cable "A" and cable "B") wired to one 1756-OA16I RTB. Each cable can be either 0.5M or 1.0M (005=0.5M, 010=1.0M). Ensure that cable A and cable B are connected to the correct module in the conversion

② The 1771-ODZ module output resistive current limits versus 1756-OA16I limits are as follows:

	1771-ODZ	*1756-OA16I w/ 1492-C005005XP*
a) Current/Point	2A	2A
b) Current/Module	6A	5A @ 60°C
c) Surge Current/Point	20A for 100ms	20A for 43ms

③ The 1771-ODZ module had a jumper selection of N.O. and N.C. outputs. The 1756-OA16I has both N.O. and N.C. outputs, but selection is by wiring termination on the 1756 swing arm. The 1492-CM1771-LD012 conversion module replaces the functionality of the 1771-ODZ jumpers with eight jumpers (JMP0 through JMP7). In the default position, the output will be N.O. If a N.C. output is required, change the jumper from pins 1-2 to pins 3-4.

④ Refer to your 1771-ODZ and 1756-OA16I Installation Manual wiring schematics and diagrams for more details. Ensure 1756 output module ratings are not exceeded. [Reference Doc: 41171-016 (Version 00)]

1771-OG to 1756-OG16

IMPORTANT	There are several key application considerations and system specifications (bottom of drawing) when using these components (conversion module, cable and input module). Read and understand these considerations before installation.

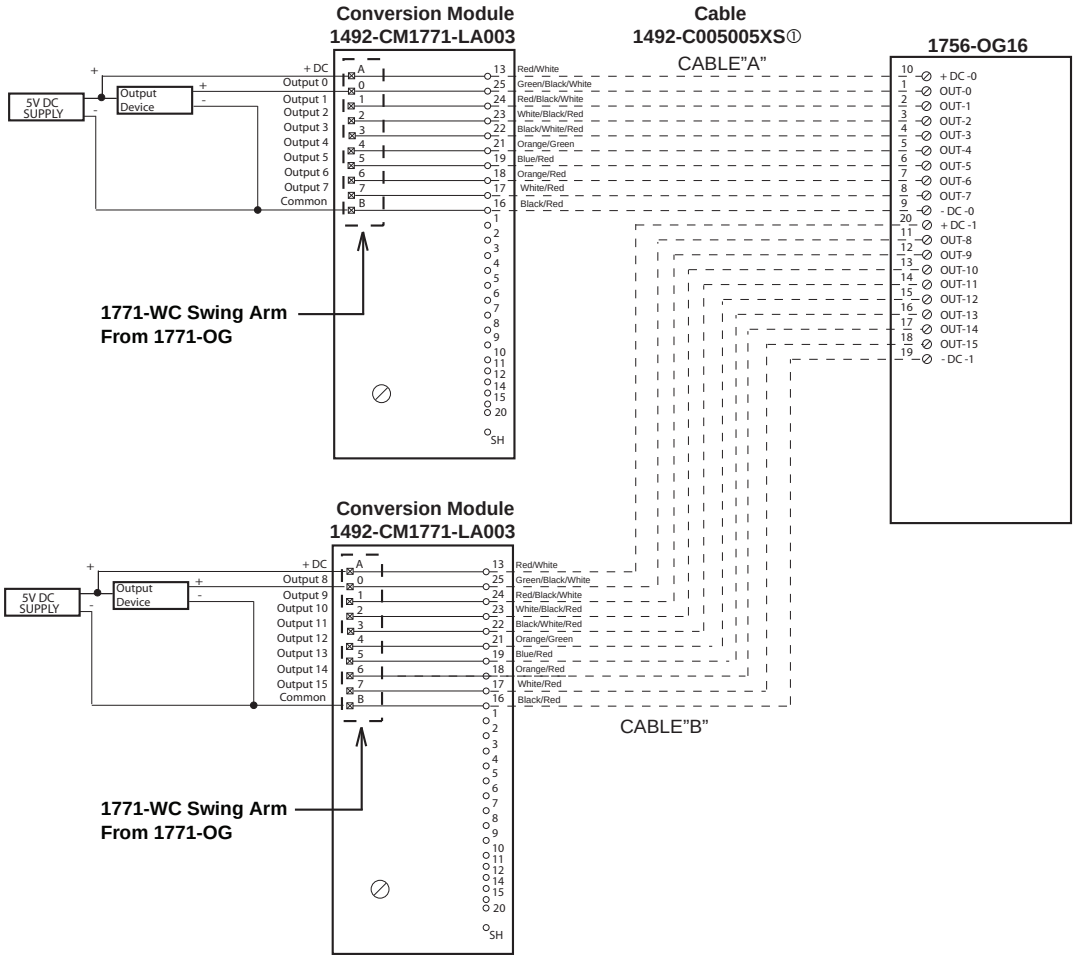

Conversion Module Installation and Application Considerations

① This Bul. 1492 cable consists of 2 separate cables (cable "A" and cable "B") wired to one 1756-OG16 RTB. Each cable can be either 0.5M or 1.0M (005=0.5M, 010=1.0M). Ensure that cable A and cable B are connected to the correct module in the conversion.

② The input delay times for the 1771-OG module versus the 1756-OG16 module are as follows:

	1771-OG	***1756-OG16 w/ 1492-C005005XS***
a) Off-to-On Delay	1ms (+/-10ms)	45ms max (plus selectable filter)
b) On-to-Off Delay	1ms (+/-10ms)	145ms max (plus selectable filter)

③ The 1771-OG module is rated 5V DC TTL INPUT MODULE. The 1756-OG16 module is rated 5V DC TTL INPUT MODULE only.

④ Refer to your 1771-OG and 1756-OG16 Installation and User Manuals for additional information concerning comparisons of module wiring, features and configuration details. [Reference Doc: 41171-028 (Version 00)]

1771-OGD to 1756-OG16

IMPORTANT	There are several key application considerations and system specifications (bottom of drawing) when using these components (conversion module, cable and input module). Read and understand these considerations before installation.

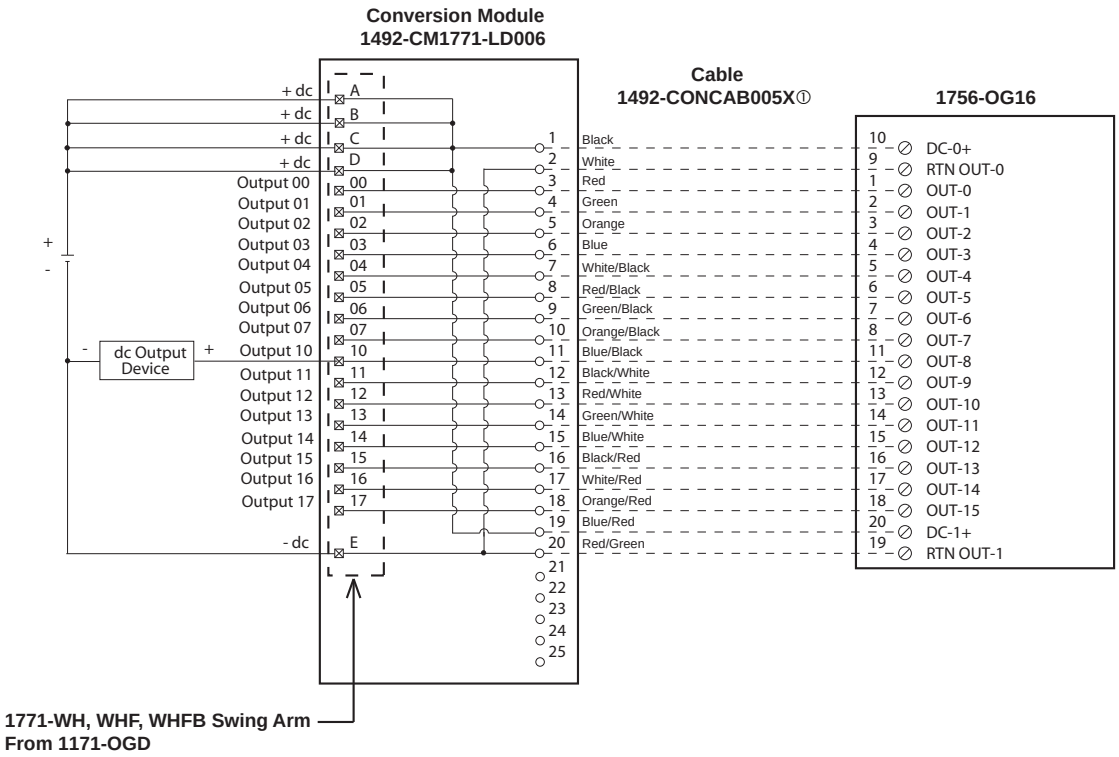

Conversion Module Installation and Application Considerations

① This Bul. 1492 cable consists of a cable wired to one 1756-OG16 RTB. Recommended cable lengths of 0.5M or 1.0M (005=0.5M, 010=1.0M). See table 2 for other lengths.

② The 1771-OGD module output current limits versus 1756-OG16 limits are as follows:

	1771-OGD	*1756-OG16 w/ 1492-CONCAB005X*
a) Current/Point	1mA	24mA
b) Current/Module	310mA	384mA

③ The 1771-OGD has a single 10A, 250V rectifier fuse (1/4 x 1-1/4 inch). The 1756-OG16 is electronically fused per group. Refer to the 1756-OG16 Installation Manual for details on electronic fusing.

④ The 1771-OGD is rated 10V to 60V DC. The 1756-OG16 is rated 10V to 31.2V DC.

⑤ Refer to your 1771-OGD and 1756-OG16 Installation Manual wiring schematics and diagrams for more details. Ensure 1756 output module ratings are not exceeded. [Reference Doc: 41171-006 (Version 00)]

1771-OM to 1756-OA16

IMPORTANT	There are several key application considerations and system specifications (bottom of drawing) when using these components (conversion module, cable and input module). Read and understand these considerations before installation.

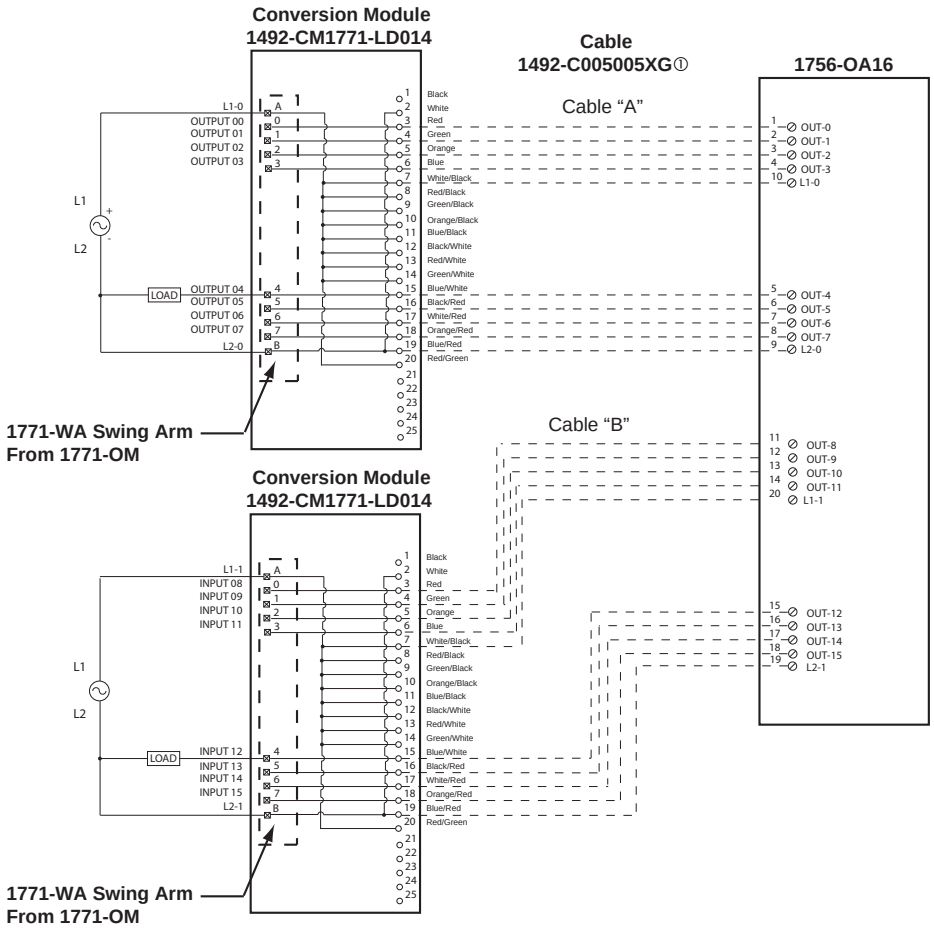

Conversion Module Installation and Application Considerations

① This Bul. 1492 cable consists of 2 separate cables (cable "A" and cable "B") wired to one 1756-OA16 RTB. Each cable can be either 0.5M or 1.0M (005=0.5M, 010=1.0M). Ensure that cable A and cable B are connected to the correct module in the conversion.

② The 1771-OM module output current limits versus 1756-OA16 limits are as follows:

	1771-OM	*1756-OA16 w/ 1492-CONCAB005XG*
a) Current/Point	2A	0.5 @ 60°C
b) Current/Module	6A	4A @ 60°C
c) Surge Current/Point	20A for 100ms	5A for 43ms

③ The 1771-OM module is rated 220V to 240V AC. The 1756-OA16 module is rated 74V to 265V AC only.

④ Refer to your 1771-OM and 1756-OA16 Installation Manual wiring schematics and diagrams for more details. Ensure 1756 output module ratings are not exceeded. [Reference Doc: 41171-022 (Version 00)]

1771-OMD to 1756-OA16

IMPORTANT	There are several key application considerations and system specifications (bottom of drawing) when using these components (conversion module, cable and input module). Read and understand these considerations before installation.

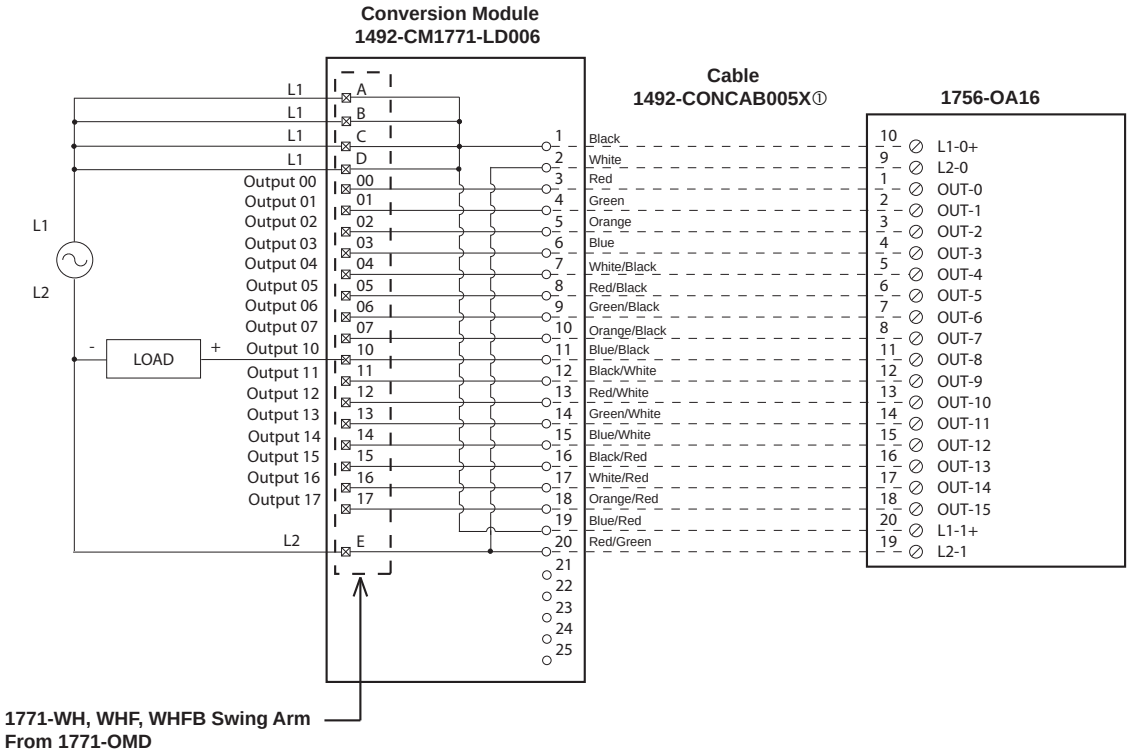

Conversion Module Installation and Application Considerations

① This Bul. 1492 cable consists of a cable wired to one 1756-OA16 RTB. Recommended cable lengths of0.5M or 1.0M (005=0.5M, 010=1.0M). See table 2 for other lengths.

② The 1771-OMD module output current limits versus 1756-OA16 limits are as follows:

	1771-OMD	*1756-OA16 w/ 1492-CONCAB005X*
a) Current/Point	2A	0.5A
b) Current/Module	8A	4A
c) Surge Current/Point	25A for 100ms	5A for 43ms

③ The 1771-OMD has a single 10A, 250V rectifier fuse (1/4 x 1 1/4 inch). The 1756-OA16 has a mechanical 3.15A @250V AC slow blow fuse. Refer to the 1756-OA16 Installation Manual for details on electronic fusing.

④ The 1771-OMD is rated 184V to 250V AC. The 1756-OA16 is rated 74V to 265V AC. If the load source voltage is greater than 30V DC, then use the 1756-OC8 with the 1492-CM1771-LD008F conversion module.

⑤ Refer to your 1771-OMD and 1756-OA16 Installation Manual wiring schematics and diagrams for more details. Ensure 1756 output module ratings are not exceeded. [Reference Doc: 41171-007 (Version 00)]

1771-ON to 1756-ON8

IMPORTANT	There are several key application considerations and system specifications (bottom of drawing) when using these components (conversion module, cable and input module). Read and understand these considerations before installation.

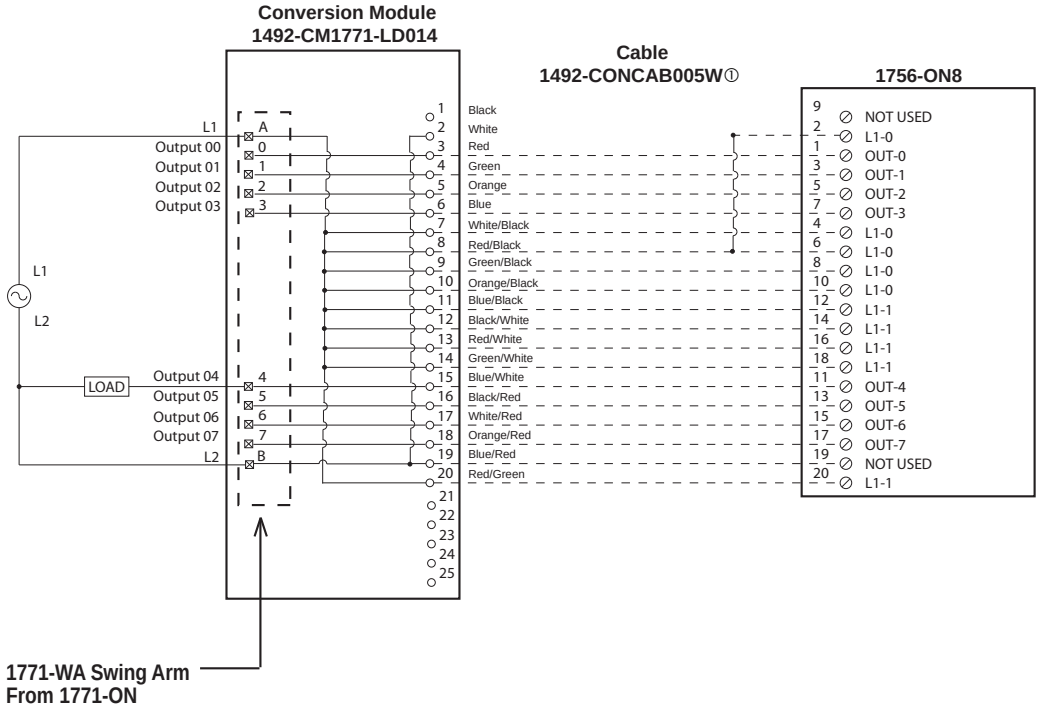

Conversion Module Installation and Application Considerations

① This Bul. 1492 cable consists of a cable wired to one 1756-ON8 RTB. Recommended cable lengths of 0.5M or 1.0M (005=0.5M, 010=1.0M). See table 2 for other lengths.

② The 1771-ON module output current limits versus 1756-ON8 limits are as follows:

	1771-ON	*1756-ON8 w/ 1492-CONCAB005W*
a) Current/Point	1.5A	2A
b) Current/Module	6A	5A @ 60°C
c) Surge Current/Point	4A for 10ms	20A for 43ms

③ The 1771-ON has eight (8) 2A, 250V fuses - 1 per output. The 1756-ON8 is electronically fused per point. Refer to the 1756-ON8 Installation Manual for details on electronic fusing.

④ Refer to your 1771-ON and 1756-ON8 Installation Manual wiring schematics and diagrams for more details. Ensure 1756 output module ratings are not exceeded. [Reference Doc: 41171-021 (Version 00)]

1771-OND to 1756-ON8

IMPORTANT	There are several key application considerations and system specifications (bottom of drawing) when using these components (conversion module, cable and input module). Read and understand these considerations before installation.

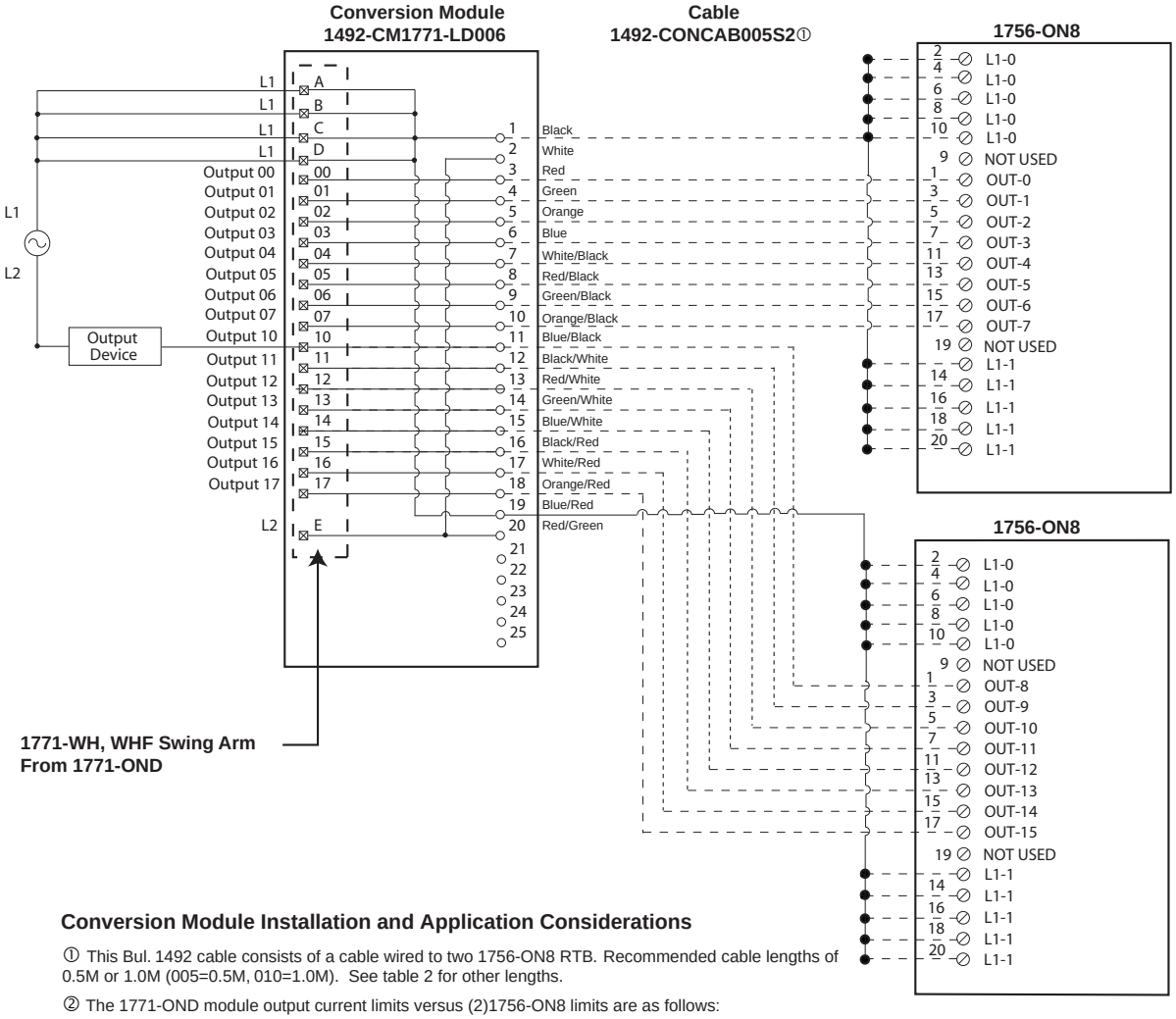

Conversion Module Installation and Application Considerations

① This Bul. 1492 cable consists of a cable wired to two 1756-ON8 RTB. Recommended cable lengths of 0.5M or 1.0M (005=0.5M, 010=1.0M). See table 2 for other lengths.

② The 1771-OND module output current limits versus (2)1756-ON8 limits are as follows:

	1771-OND	*1756-ON8 w/ 1492-CONCAB005S2*
a) Current/Point	2A	2A
b) Current/Module	8A	5A
c) Surge Current/Point	25A for 100ms	20A for 43ms

③ The L2 terminal (Terminal E) on the 1771-ON8 module was an optional connection, but it is required for the 1756-OA16. This connection must be added if it was not connected.

④ The 1771-OND is rated 24V AC. The 1756-ON8 is rated 10V to 30V AC.

⑤ Refer to your 1771-OND and 1756-ON8 Installation Manual wiring schematics and diagrams for more details. Ensure 1756 output module ratings are not exceeded. [Reference Doc: 41171-008 (Version 00)]

1771-OQ to 1756-OB16I

IMPORTANT	There are several key application considerations and system specifications (bottom of drawing) when using these components (conversion module, cable and input module). Read and understand these considerations before installation.

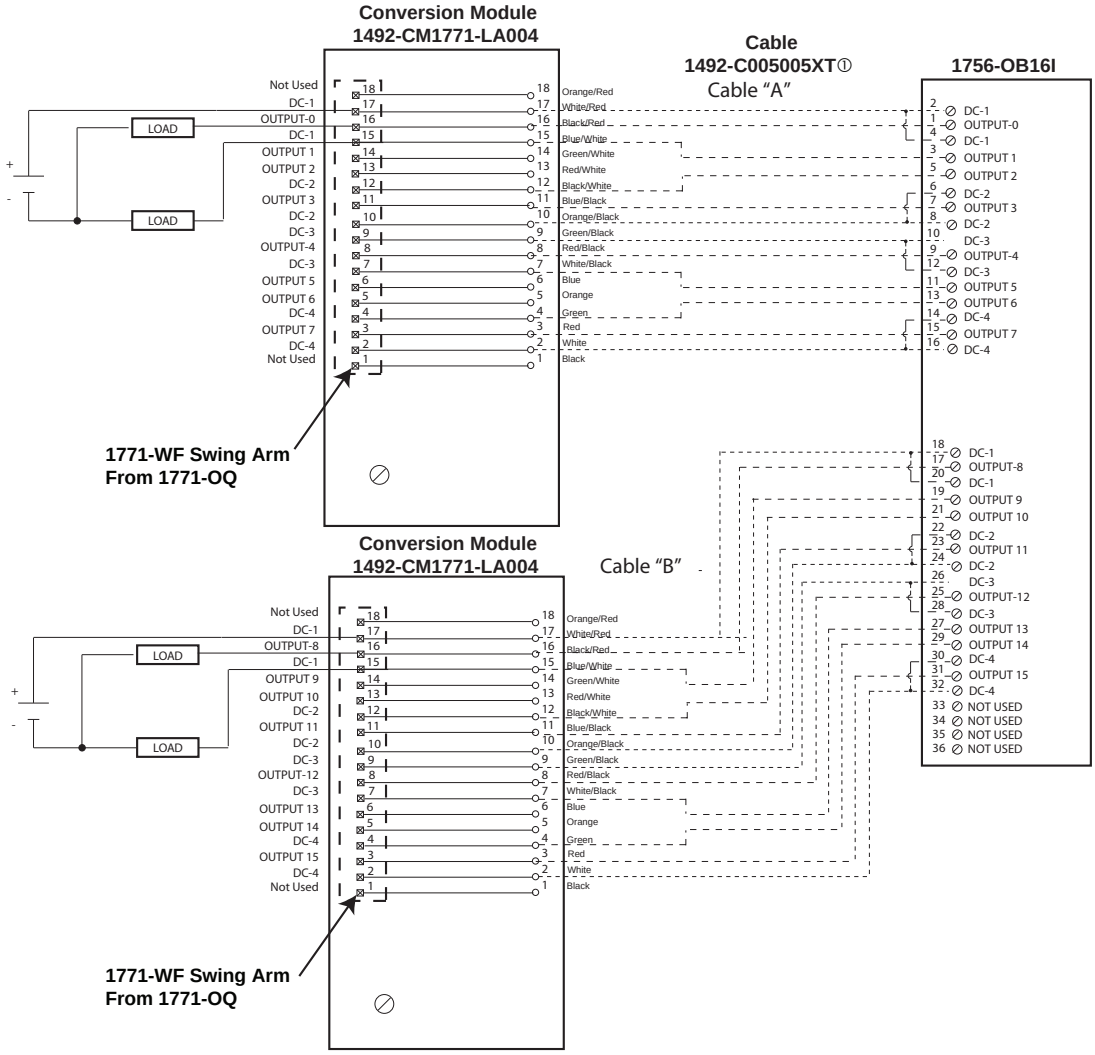

Conversion Module Installation and Application Considerations

① This Bul. 1492 cable consists of 2 separate cables (cable "A" and cable "B") wired to one 1756-OB16I RTB. Each cable can be either 0.5M or 1.0M (005=0.5M, 010=1.0M). Ensure that cable A and cable B are connected to the correct module in the conversion

② The 1771-OQ module output resistive current limits versus 1756-OB16I limits are as follows:

	1771-OQ	*1756-OB16I w/ 1492-C005005XT*
a) Current/Point	2.25A	2A
b) Current/Module	9A	8A
c) Surge Current/Point	4A for 10ms	4A for 10ms

③ The 1771-OQ is rated 10V to 32V DC. The 1756-OB16I is rated 10V to 30V DC.

④ Refer to your 1771-OQ and 1756-OB16I Installation Manual wiring schematics and diagrams for more details. Ensure 1756 output module ratings are not exceeded. [Reference Doc: 41171-033 (Version 00)]

1771-OQ16 to 1756-OB16I

IMPORTANT	There are several key application considerations and system specifications (bottom of drawing) when using these components (conversion module, cable and input module). Read and understand these considerations before installation.

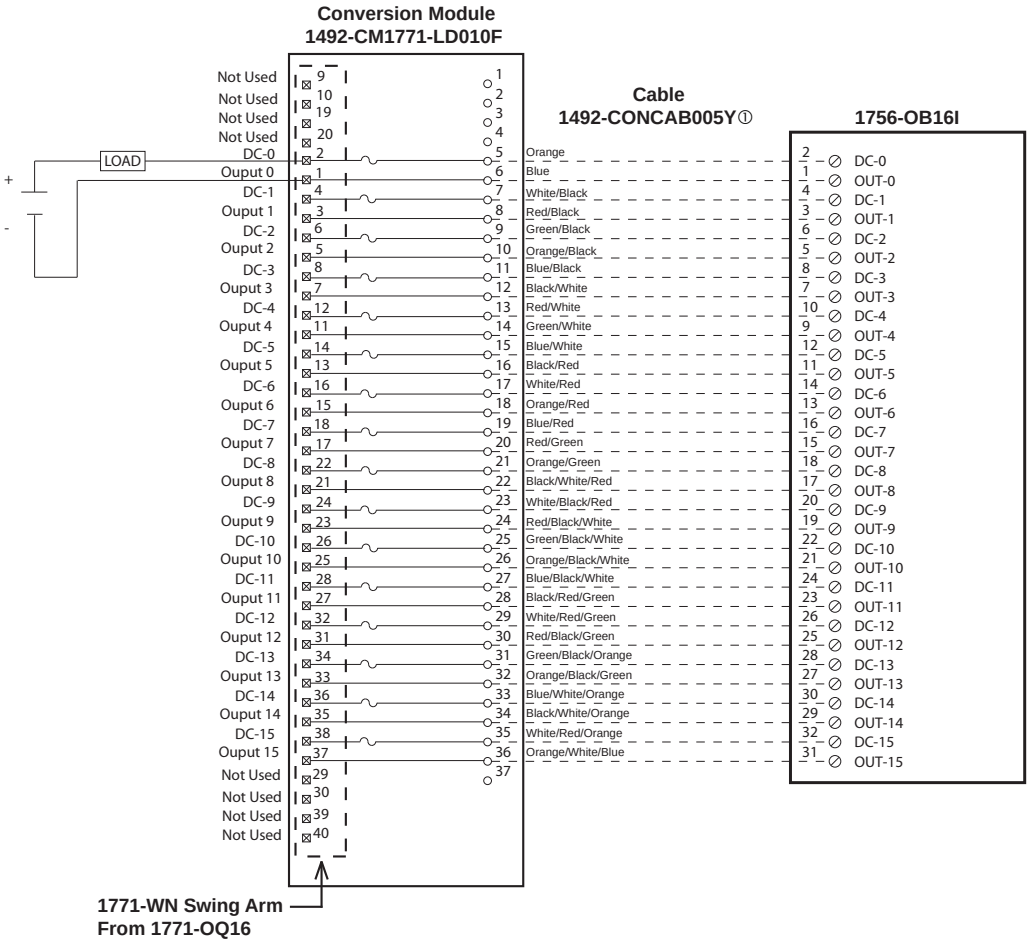

Conversion Module Installation and Application Considerations

① This Bul. 1492 cable consists of a cable wired to one 1756-OB16I RTB. Recommended cable lengths of 0.5M or 1.0M (005=0.5M, 010=1.0M). See table 2 for other lengths.

② The 1771-OQ16 module output current limits versus 1756-OB16I limits are as follows:

	1771-OQ16	*1756-OB16I w/ 1492-CONCAB005Y*
a) Current/Point	2A	2A
b) Current/Module	32A	8A
c) Surge Current/Point	4A for 10ms	4A for 10ms

③ The 1771-OQ16 has sixteen (16) 3A, 250V rectifier fuses. The 1756-OB16I is NOT fused, as such sixteen(16) 2AG fuses and clips are provided on the 1492-CM1771-LD010F conversion module. Max fuse rating is 1.5A based on 1756-OA16I.

④ The 1771-OQ16 is rated 10V to 32V DC. The 1756-OB16I is rated 10V to 30V DC.

⑤ Refer to your 1771-OQ16 and 1756-OB16I Installation Manual wiring schematics and diagrams for more details. Ensure 1756 output module ratings are not exceeded. [Reference Doc: 41171-010 (Version 00)]

1771-OR to 1756-OB16I

IMPORTANT	There are several key application considerations and system specifications (bottom of drawing) when using these components (conversion module, cable and input module). Read and understand these considerations before installation.

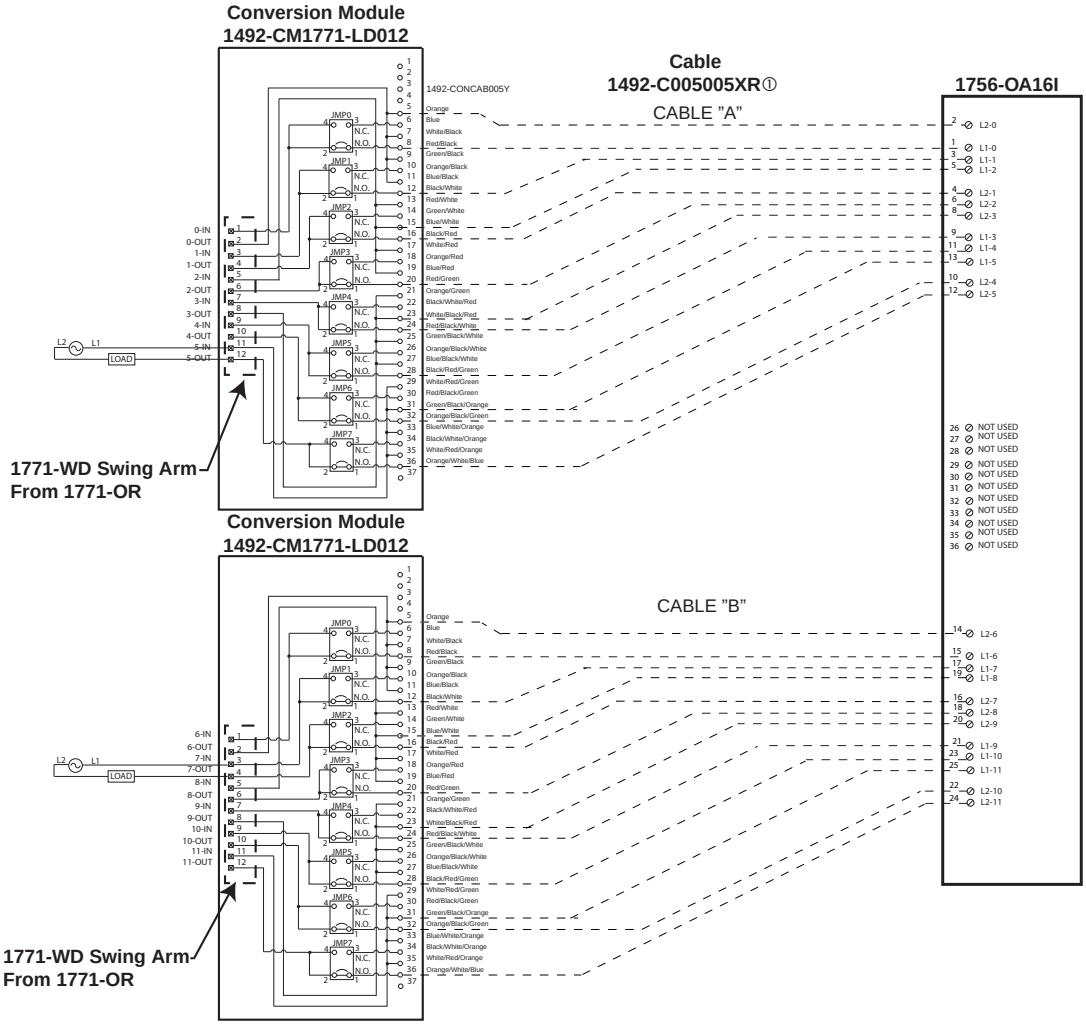

Conversion Module Installation and Application Considerations

① This Bul. 1492 cable consists of 2 separate cables (cable "A" and cable "B") wired to one 1756-OA16I RTB. Each cable can be either 0.5M or 1.0M (005=0.5M, 010=1.0M). Ensure that cable A and cable B are connected to the correct module in the conversion

② The 1771-OR module output resistive current limits versus 1756-OA16I limits are as follows:

	1771-OR	*1756-OA16I w/ 1492-C005005XR*
a) Current/Point	2A	2A
b) Current/Module	6A	5A @ 60°C
c) Surge Current/Point	15A for 100ms	20A for 43ms

③ The 1771-OR module had a jumper selection of N.O. and N.C. outputs. The 1756-OA16I has both N.O. and N.C. outputs, but selection is by wiring termination on the 1756 swing arm. The 1492-CM1771-LD012 conversion module replaces the functionality of the 1771-OR jumpers with eight jumpers (JMP0 through JMP7). In the default position, the output will be N.O. If a N.C. output is required, change the jumper from pins 1-2 to pins 3-4.

④ Refer to your 1771-OR and 1756-OA16I Installation Manual wiring schematics and diagrams for more details. Ensure 1756 output module ratings are not exceeded. [Reference Doc: 41171-017 (Version 00)]

1771-OVN to 1756-OV16E

IMPORTANT	There are several key application considerations and system specifications (bottom of drawing) when using these components (conversion module, cable and input module). Read and understand these considerations before installation.

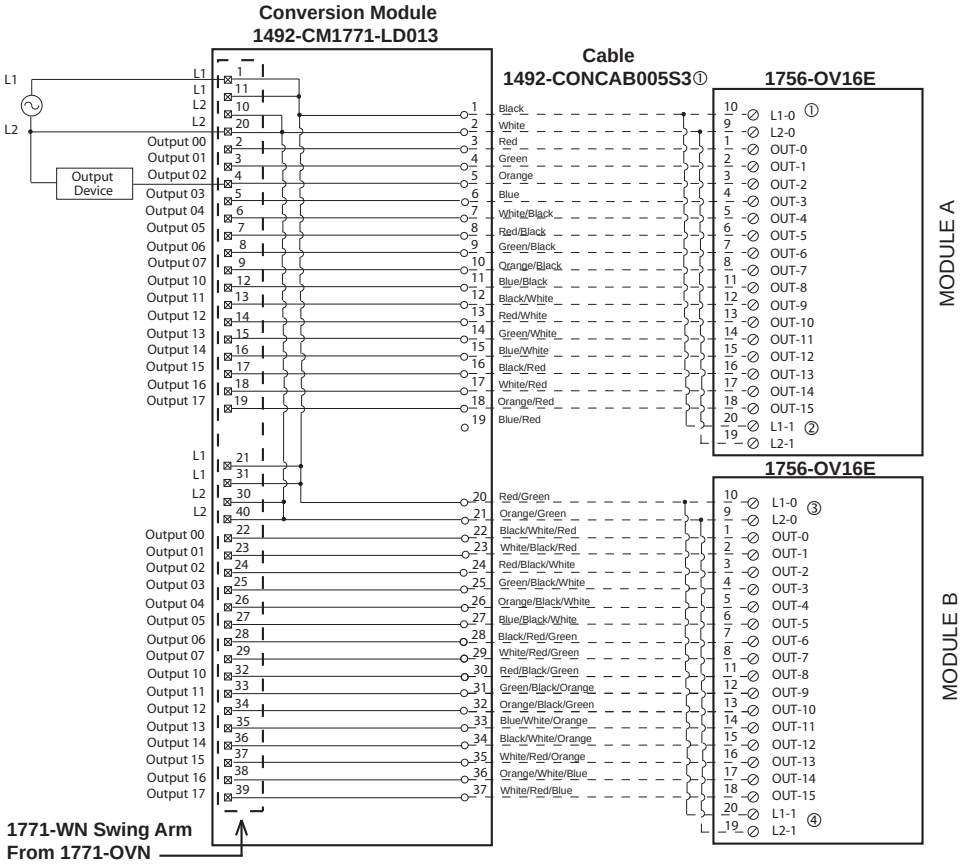

Conversion Module Installation and Application Considerations

① This Bul. 1492 cable consists of a cable wired to two 1756-OV16E RTB. Recommended cable lengths of 0.5M or 1.0M (005=0.5M, 010=1.0M). See table 2 for other lengths.

② The 1771-OVN module output current limits versus 1756-OV16E limits are as follows:

	1771-OVN	*1756-OV16E w/ 1492-CONCAB005S3*
a) Current/Point	0.5A	1A
b) Current/Module	8A (32 pts)	8A (16 pts)
c) Surge Current/Point	2A for 10ms	2A for 10ms

③ The 1771-OVN has 4 groups (allowing 4 separate power supplies). This module/cable combination ties all 4 groups from the 1771-OVN together. Field wiring modification must be made to accommodate this if mulitple supplies were used. If more than 1 supply was used, all but 1 of the power supplies must be removed.

④ The 1771-OVN did not allow connections for L2, however the 1756-OV16E requires an L2 connection for proper operation. The 1771-OVN did not use terminals 10, 20, 30, 40. These terminals have been reassigned for an L2 connection in this application. The installer must rewire L2 to one of these terminals.

⑤ Refer to your 1771-OVN and 1756-OV16E Installation Manual wiring schematics and diagrams for more details. Ensure 1756 output module ratings are not exceeded.

⑥ This configuration uses two (2) 1756-OV16E output modules to replace a single 1771-OVN output module. This may require the use of a larger 1756 I/O chassis and conversion mounting assembly. Ensure there is sufficient panel space to allow for this possibility.

[Reference Doc: 41171-018 (Version 00)]

1771-OW to 1756-OX8I

IMPORTANT	There are several key application considerations and system specifications (bottom of drawing) when using these components (conversion module, cable and input module). Read and understand these considerations before installation.

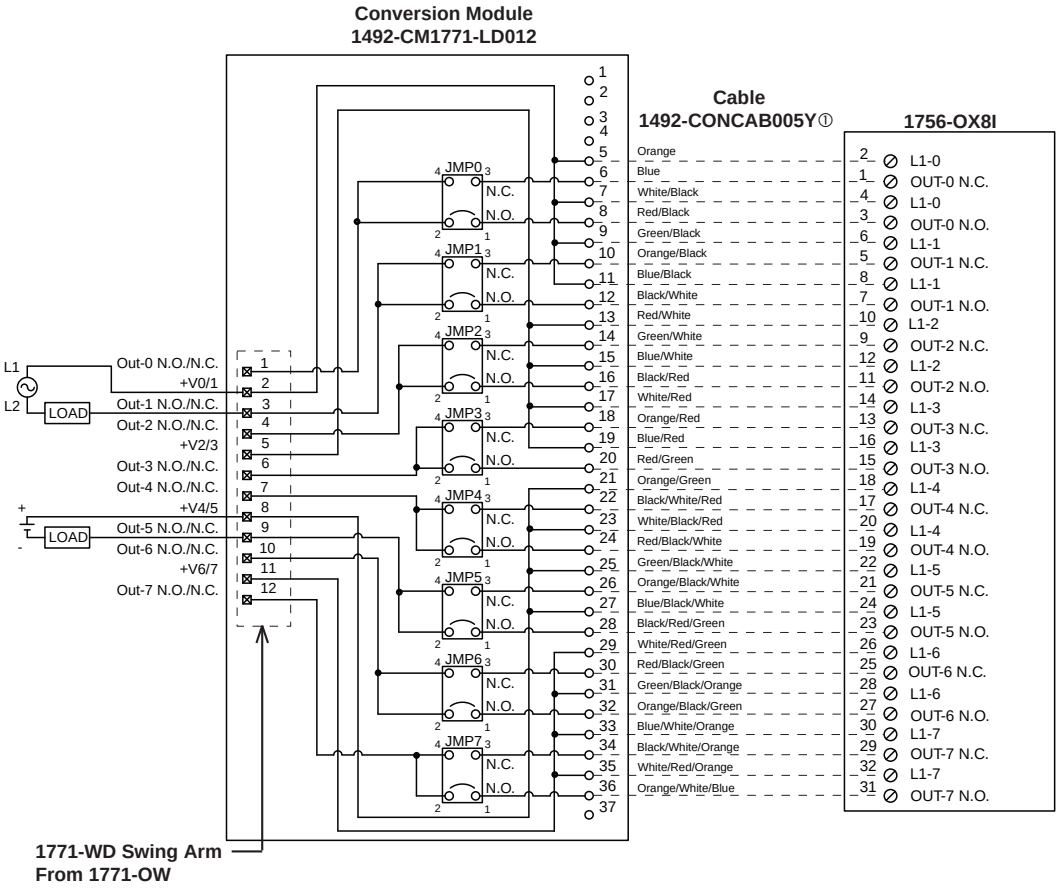

Conversion Module Installation and Application Considerations

① This Bul. 1492 cable consists of a cable wired to one 1756-OX8I RTB. Recommended cable lengths of 0.5M or 1.0M (005=0.5M), 010=1.0M). See table 2 for other lengths.

② The 1771-OW module output resistive current limits versus 1756-OX8I limits are as follows:
(NOTE: For switching and inductive current ratings, refer to the modules Installation Instructions)

	1771-OW	*1756-OX8I w/ 1492-CONCAB005Y*
a) Current/Point	0.2A @ 138V AC	2A @ 240V AC
	1A @ 30V DC	2A @ 30V DC
	0.25A @ 125V DC	0.25A @ 125V DC

③ The 1771-OW module had a jumper selection of N.O. and N.C. outputs. The 1756-OX8I has both N.O. and N.C. outputs, but selection is by wiring termination on the 1756 swing arm. The 1492-CM1771-LD012 conversion module replaces the functionality of the 1771-OW jumpers with eight jumpers (JMP0 through JMP7). In the default position, the output will be N.O. If a N.C. output is required, change the jumper from pins 1-2 to pins 3-4.

④ Refer to your 1771-OW and 1756-OX8I Installation Manual wiring schematics and diagrams for more details. Ensure 1756 output module ratings are not exceeded. [Reference Doc: 41170-941 (Version 01)]

1771-OW16 to 1756-OW16I

IMPORTANT	There are several key application considerations and system specifications (bottom of drawing) when using these components (conversion module, cable and input module). Read and understand these considerations before installation.

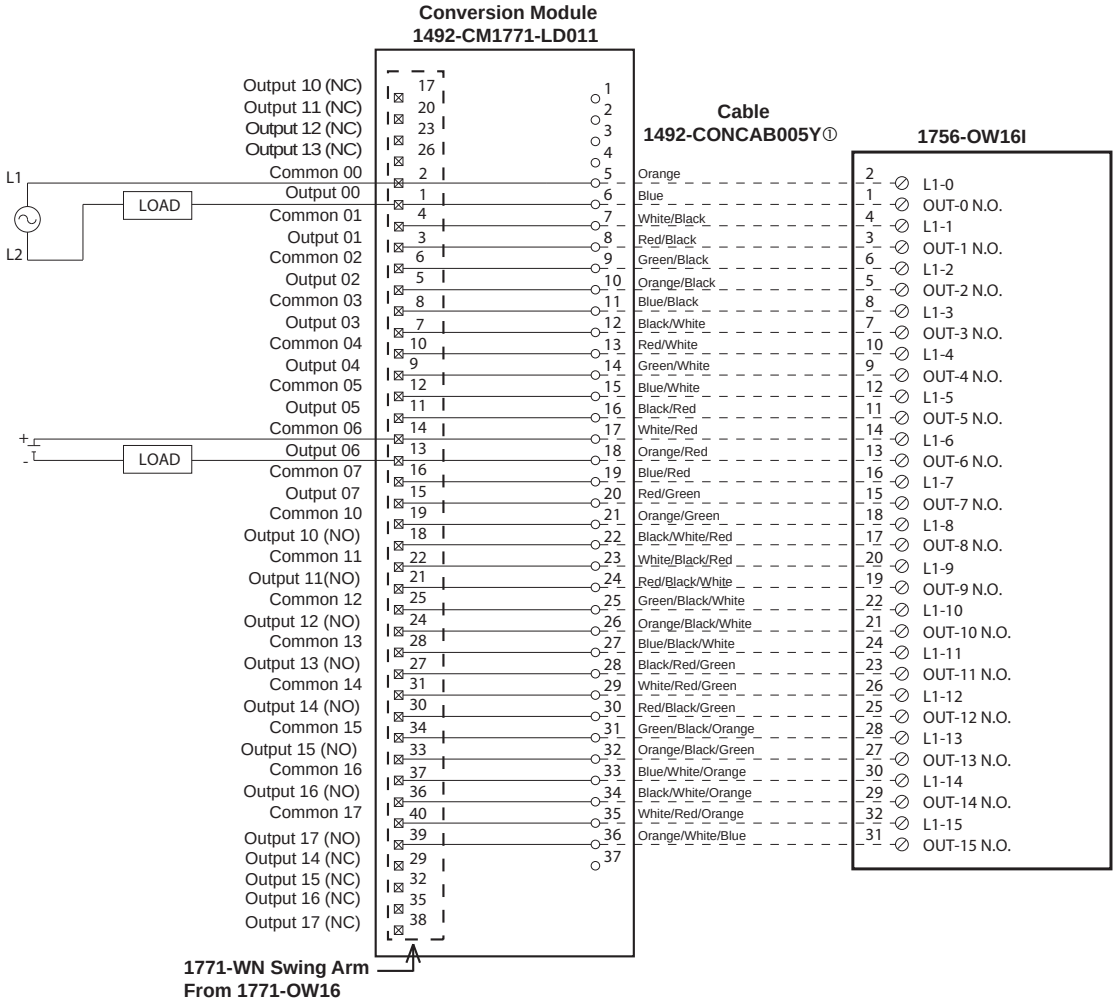

Conversion Module Installation and Application Considerations

① The 1771-OW16 module output resistive current limits versus 1756-OW16I limits are as follows:

	1771-OW16	***1756-OW16I w/ 1492-CONCAB005Y***
a) Current/Point	2A @ 250V AC	2A @ 240V AC
	2A @ 30V DC	2A @ 30V DC
	0.3A @ 150V DC	0.25A @ 125V AC

② The 1492-CONCAB005Y is limited to 3A per pin.

③ The 1771-OW16 has N.O. and N.C. relay contact outputs. The 1756-OW16I has N.O. relay contact outputs only. The conversion module does not convert the N.C. to N.O. contacts. If the 1771-OW16 N.C. outputs were being used, the installer must rewire the 1771-WN swing arm and move the N.C. wires to the N.O. output terminals. In addition, the control Logix programming will need to be changed to simulate a N.C. relay with this output.

③ Refer to your 1771-OW16 and 1756-OW16I Installation Manual wiring schematics and diagrams for more details.

Ensure 1756 output module ratings are not exceeded. Reference Doc: 41170-940 (Version 01)]

1771-OWNA to 1756-OW16I

IMPORTANT	There are several key application considerations and system specifications (bottom of drawing) when using these components (conversion module, cable and input module). Read and understand these considerations before installation.

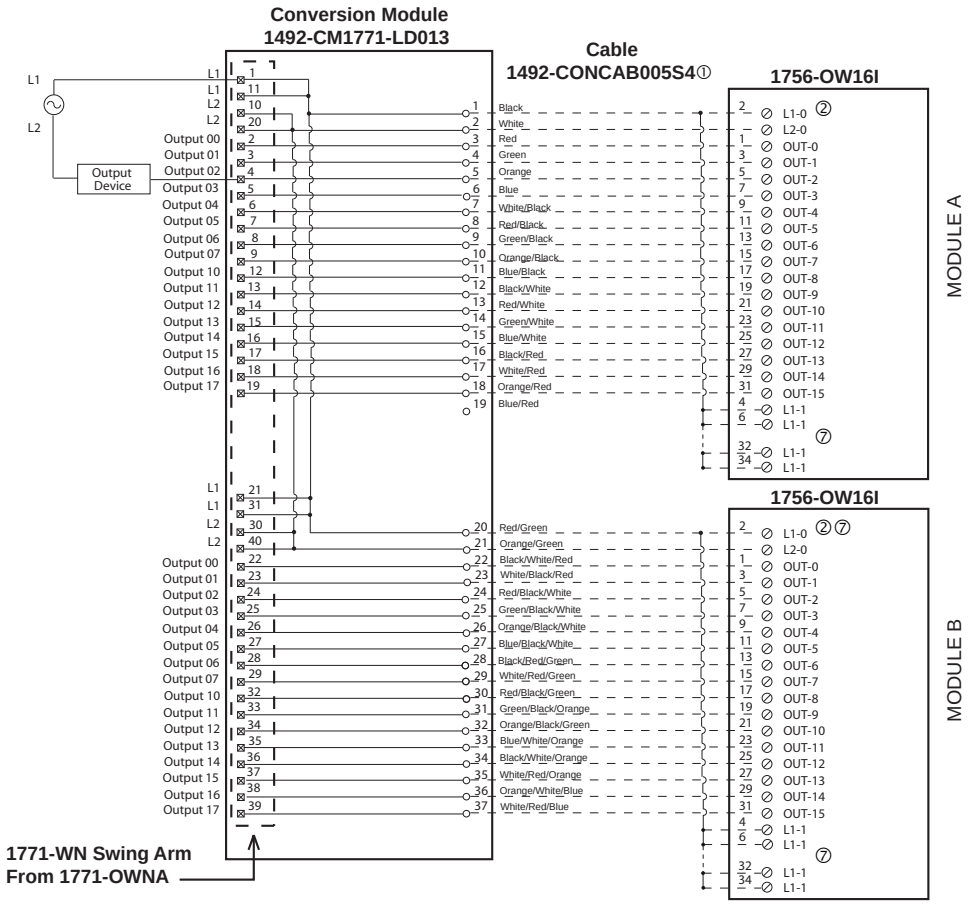

Conversion Module Installation and Application Considerations

① This Bul. 1492 cable consists of a cable wired to two 1756-OW16I RTB. Recommended cable lengths of 0.5M or 1.0M (005=0.5M, 010=1.0M). See table 2 for other lengths.

② The 1771-OWNA module output current limits versus 1756-OW16I limits are as follows:

	1771-OWNA	*1756-OW16I w/ 1492-CONCAB005S4*
a) Current/Point	1A	0.5A
b) Current/Module	12A (32 pts)	2A (16 pts)

③ The 1771-OWNA has 4 groups (allowing 4 separate power supplies). This module/cable combination ties all 4 groups from the 1771-OWNA together. Field wiring modification must be made to accommodate this if mulitple supplies were used. If more than 1 supply was used, all but 1 of the power supplies must be removed.

④ The 1771-OWNA did not allow connections for L2, however the 1756-OW16I requires an L2 connection for proper operation. The 1771-OWNA did not use terminals 10, 20, 30, 40. These terminals have been reassigned for an L2 connection in this application. The installer must rewire L2 to one of these terminals.

⑤ Refer to your 1771-OWNA and 1756-OW16I Installation Manual wiring schematics and diagrams for more details. Ensure 1756 output module ratings are not exceeded.

⑥ This configuration uses two (2) 1756-OW16I output modules to replace a single 1771-OWNA output module. This may require the use of a larger 1756 I/O chassis and conversion mounting assembly. Ensure there is sufficient panel space to allow for this possibility.

⑦ 1756-OW16I output modules has all inputs jumpered together pins 2 through 34 even.

[Reference Doc: 41171-019 (Version 00)]

1771-OY to 1756-OX8I

IMPORTANT	There are several key application considerations and system specifications (bottom of drawing) when using these components (conversion module, cable and output module). Read and understand these considerations before installation. In addition, refer to the current draw requirements of the existing loads for this configuration to ensure they are within the current ratings of the 1756 output module.

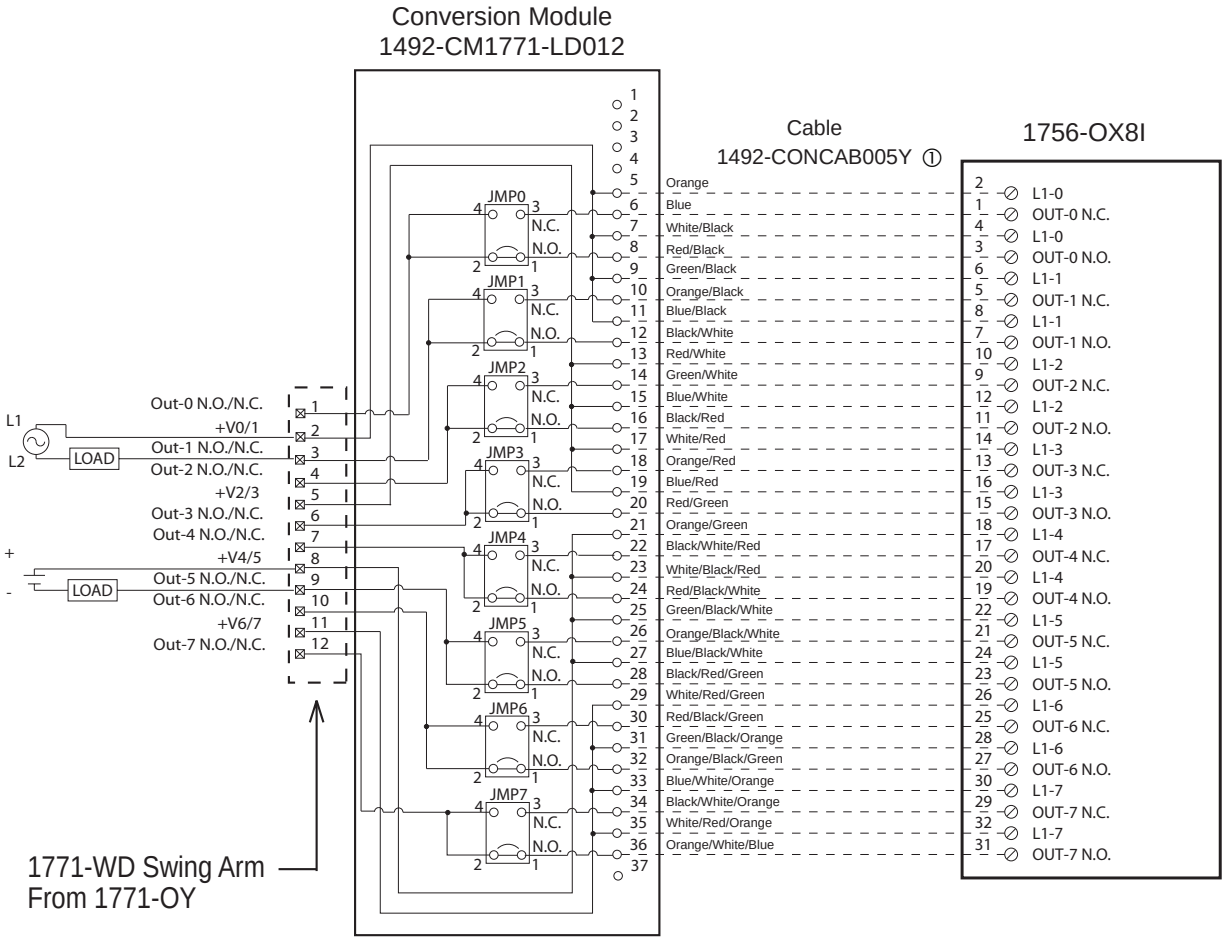

CONVERSION MODULE INSTALLATION AND APPLICATION CONSIDERATIONS

① This Bul. 1492 cable consists of a cable wired to one 1756-OX8I RTB. Recommended cable lengths of 0.5M or 1.0M (005=0.5M, 010=1.0M). See table 2 for other lengths.

② The 1771-OY module output resistive current limits versus 1756-OX8I limits are as follows:
(NOTE: for switching and inductive current ratings, refer to the modules Installation Instructions)

	1771-OY	***1756-OX8I w/ 1492-CONCAB005Y***
a) Current/Point	100mA @ 138V AC	2A @ 240V AC
	100mA @ 125V DC	2A @ 30V DC
		0.25A @ 125V DC

③ The 1771-OY module had a jumper selection of N.O. and N.C. outputs. The 1756-OX8I has both N.O. and N.C. relay outputs, but selection is by wiring termination on the 1756 swing arm. The 1492-CM1771-LD012 conversion module replaces the functionality of the 1771-OY jumpers with eight jumpers (JMP0 through JMP7). In the default position, the output will be N.O.. If a N.C. output is required, change the jumper from pins 1-2 to pins 3-4.

④ Refer to your 1771-OY and 1756-OX8I Installation Manual wiring schematics and diagrams for more details. Ensure 1756 output module ratings are not exceeded.

41171-011 (00)

1771-OYL to 1756-OX8I

IMPORTANT	There are several key application considerations and system specifications (bottom of drawing) when using these components (conversion module, cable and output module). Read and understand these considerations before installation. In addition, refer to the current draw requirements of the existing loads for this configuration to ensure they are within the current ratings of the 1756 output module.

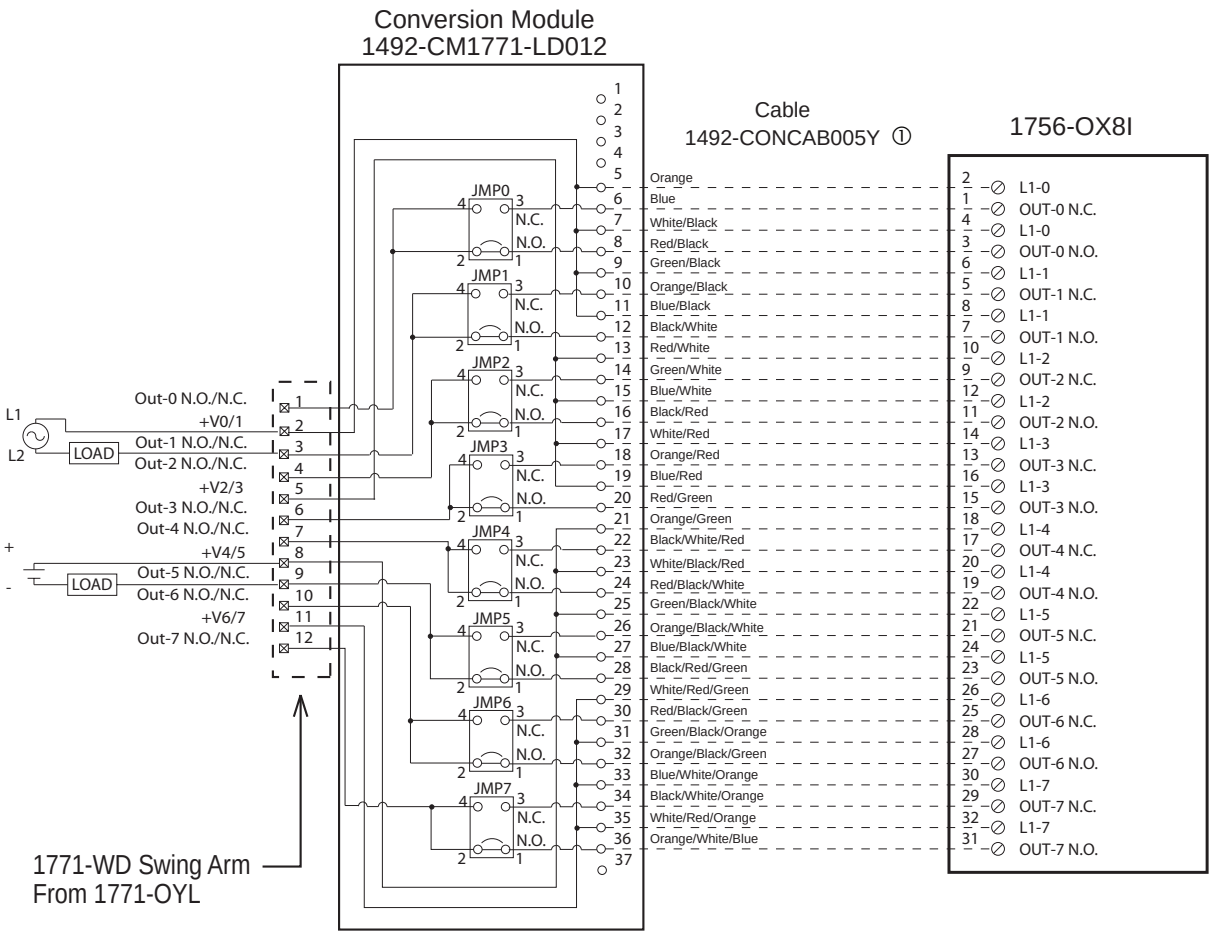

CONVERSION MODULE INSTALLATION AND APPLICATION CONSIDERATIONS

① This Bul. 1492 cable consists of a cable wired to one 1756-OX8I RTB. Recommended cable lengths of 0.5M or 1.0M (005=0.5M, 010=1.0M). See table 2 for other lengths.

② The 1771-OYL module output resistive current limits versus 1756-OX8I limits are as follows:
(NOTE: for switching and inductive current ratings, refer to the modules Installation Instructions)

	1771-OYL	***1756-OX8I w/ 1492-CONCAB005Y***
a) Current/Point	100mA @ 24V AC	2A @ 240V AC
	100mA @ 24V DC	2A @ 30V DC
		0.25A @ 125V DC

③ The 1771-OYL module had a jumper selection of N.O. and N.C. outputs. The 1756-OX8I has both N.O. and N.C. relay outputs, but selection is by wiring termination on the 1756 swing arm. The 1492-CM1771-LD012 conversion module replaces the functionality of the 1771-OYL jumpers with eight jumpers (JMP0 through JMP7). In the default position, the output will be N.O.. If a N.C. output is required, change the jumper from pins 1-2 to pins 3-4.

④ Refer to your 1771-OYL and 1756-OX8I Installation Manual wiring schematics and diagrams for more details. Ensure 1756 output module ratings are not exceeded.

41171-012 (00)

1771-OZ to 1756-OX8I

IMPORTANT	There are several key application considerations and system specifications (bottom of drawing) when using these components (conversion module, cable and input module). Read and understand these considerations before installation.

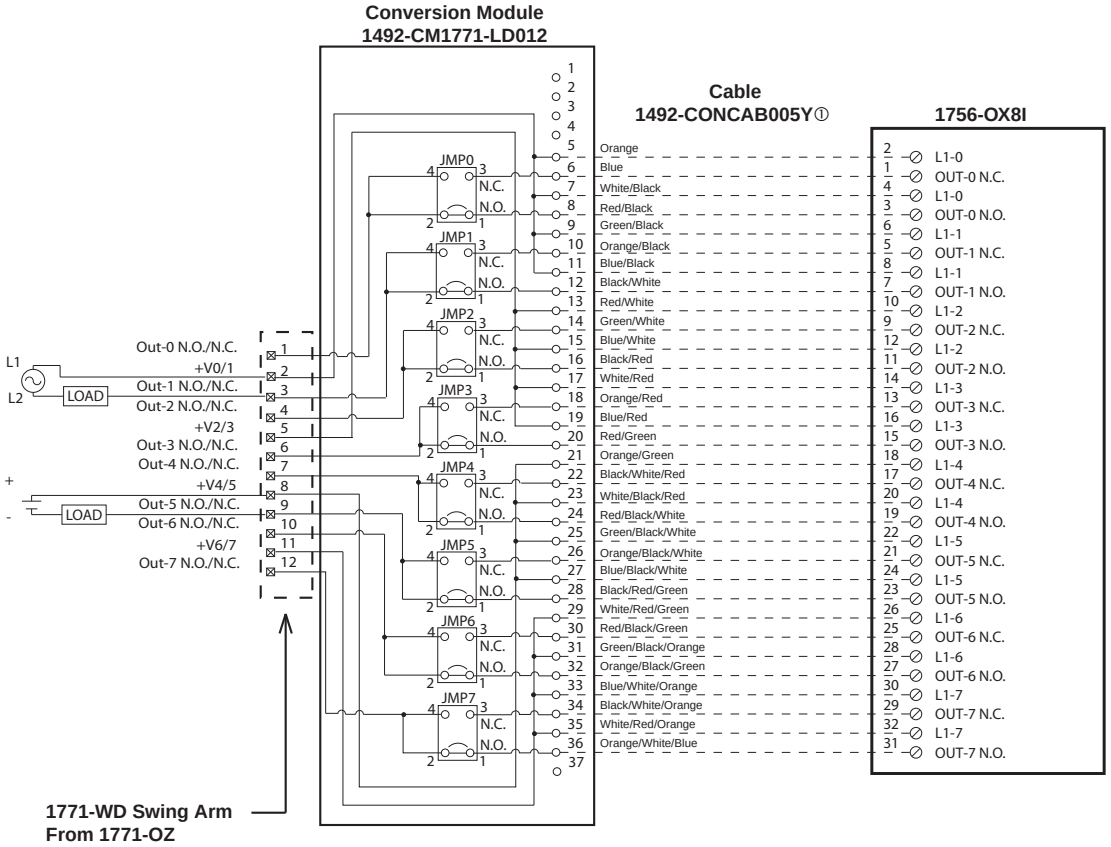

Conversion Module Installation and Application Considerations

① This Bul. 1492 cable consists of a cable wired to one 1756-OX8I RTB. Recommended cable lengths of 0.5M or 1.0M (005=0.5M), 010=1.0M). See table 2 for other lengths.

② The 1771-OZ module output resistive current limits versus 1756-OX8I limits are as follows:
(NOTE: For switching and inductive current ratings, refer to the modules Installation Instructions)

	1771-OZ	*1756-OX8I w/ 1492-CONCAB005Y*
a) Current/Point	100mA @ 138V AC	2A @ 240V AC
	100mA @ 138V DC	2A @ 30V DC
		0.25A @ 125V DC

③ The 1771-OZ module had a jumper selection of N.O. and N.C. outputs. The 1756-OX8I has both N.O. and N.C. outputs, but selection is by wiring termination on the 1756 swing arm. The 1492-CM1771-LD012 conversion module replaces the functionality of the 1771-OZ jumpers with eight jumpers (JMP0 through JMP7). In the default position, the output will be N.O. If a N.C. output is required, change the jumper from pins 1-2 to pins 3-4.

④ Refer to your 1771-OZ and 1756-OX8I Installation Manual wiring schematics and diagrams for more details. Ensure 1756 output module ratings are not exceeded. [Reference Doc: 41171-013 (Version 00)]

1771-OZL to 1756-OX8I

IMPORTANT	There are several key application considerations and system specifications (bottom of drawing) when using these components (conversion module, cable and input module). Read and understand these considerations before installation.

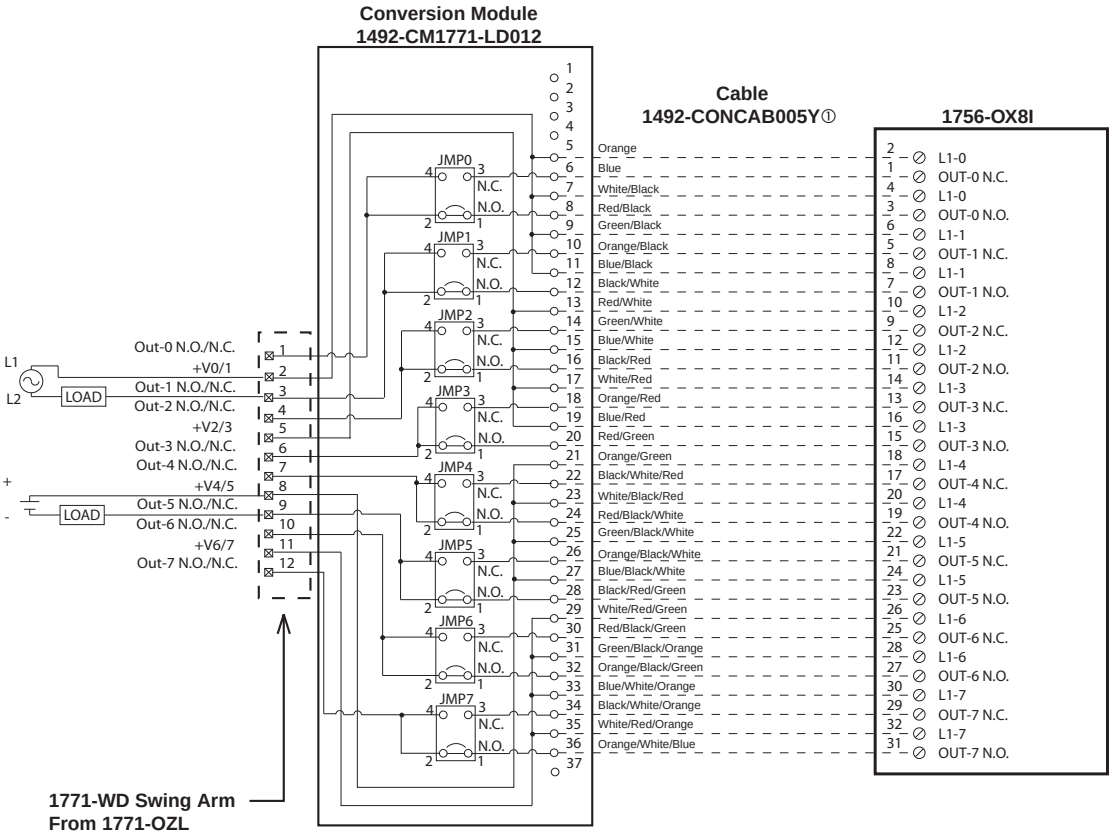

Conversion Module Installation and Application Considerations

① This Bul. 1492 cable consists of a cable wired to one 1756-OX8I RTB. Recommended cable lengths of 0.5M or 1.0M (005=0.5M), 010=1.0M). See table 2 for other lengths.

② The 1771-OZL module output resistive current limits versus 1756-OX8I limits are as follows:
(NOTE: For switching and inductive current ratings, refer to the modules Installation Instructions)

	1771-OZL	*1756-OX8I w/ 1492-CONCAB005Y*
a) Current/Point	100mA @ 138V AC	2A @ 240V AC
	100mA @ 138V DC	2A @ 30V DC
		0.25A @ 125V DC

③ The 1771-OZL module had a jumper selection of N.O. and N.C. outputs. The 1756-OX8I has both N.O. and N.C. outputs, but selection is by wiring termination on the 1756 swing arm. The 1492-CM1771-LD012 conversion module replaces the functionality of the 1771-OZL jumpers with eight jumpers (JMP0 through JMP7). In the default position, the output will be N.O. If a N.C. output is required, change the jumper from pins 1-2 to pins 3-4.

④ Refer to your 1771-OZL and 1756-OX8I Installation Manual wiring schematics and diagrams for more details. Ensure 1756 output module ratings are not exceeded. [Reference Doc: 41171-014 (Version 00)]

1771-IFE to 1756-IF16 Differential Current

IMPORTANT	There are several key application considerations and system specifications (bottom of drawing) when using these components (conversion module, cable and output module). Read and understand these considerations before installation.

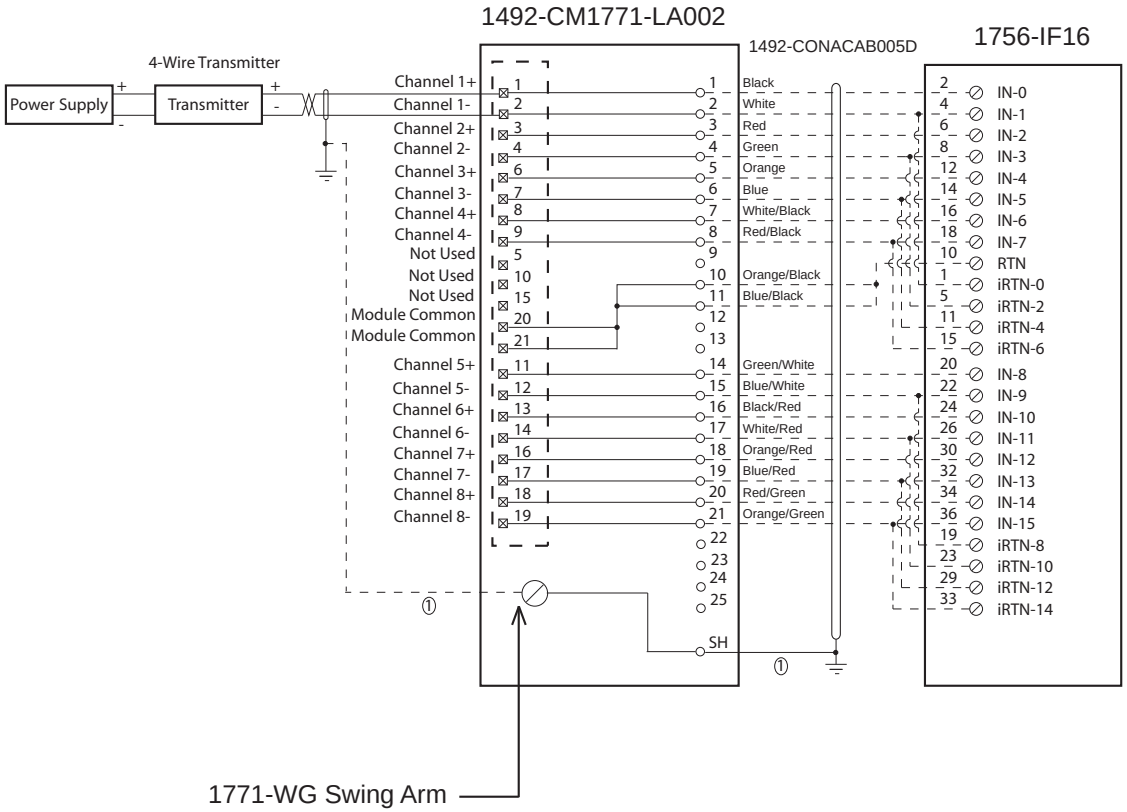

CONVERSION MODULE INSTALLATION AND APPLICATION CONSIDERATIONS

① SHIELD GROUNDING: In some installations, the field wiring shield was grounded on the 1771 chassis. If this was the case, the installer must remove these shield connections from the 1771 chassis and they can be connected to the grounding stud on the 1492-CM1771-LA002 module. The pre-wired cable used between the 1492-CM1771-LA002 module and the 1756-IF16 [1492-CONACAB005D] provides a shield ground lug to ground the shield at the 1756 ControlLogix chassis, this must be connected. Do NOT connect this ground lug to the conversion module grounding stud.

② This design assumes that all inputs on the1771-IFE were connected to current transmitters. If there was a mix of current and voltage transmitters, then modification of the pre-wired cable [1492-CONACAB005D] will need to occur at the 1756-IF16 terminal block. Refer to the 1756-IF16 Installation Manual for modification details.

③ The 1771-IFE analog input ranges were configured via software, as is the input range for the 1756-IF16. Please ensure the correct input range is configured in the 1756-IF16.

④ Refer to your 1771-IFE and 1756-IF16 Installation and User Manuals for additional information concerning comparisons of module wiring, features and configuration details.

41170-946 (0)

1771-IFE to 1756-IF16 Differential Voltage

IMPORTANT	There are several key application considerations and system specifications (bottom of drawing) when using these components (conversion module, cable and input module). Read and understand these considerations before installation.

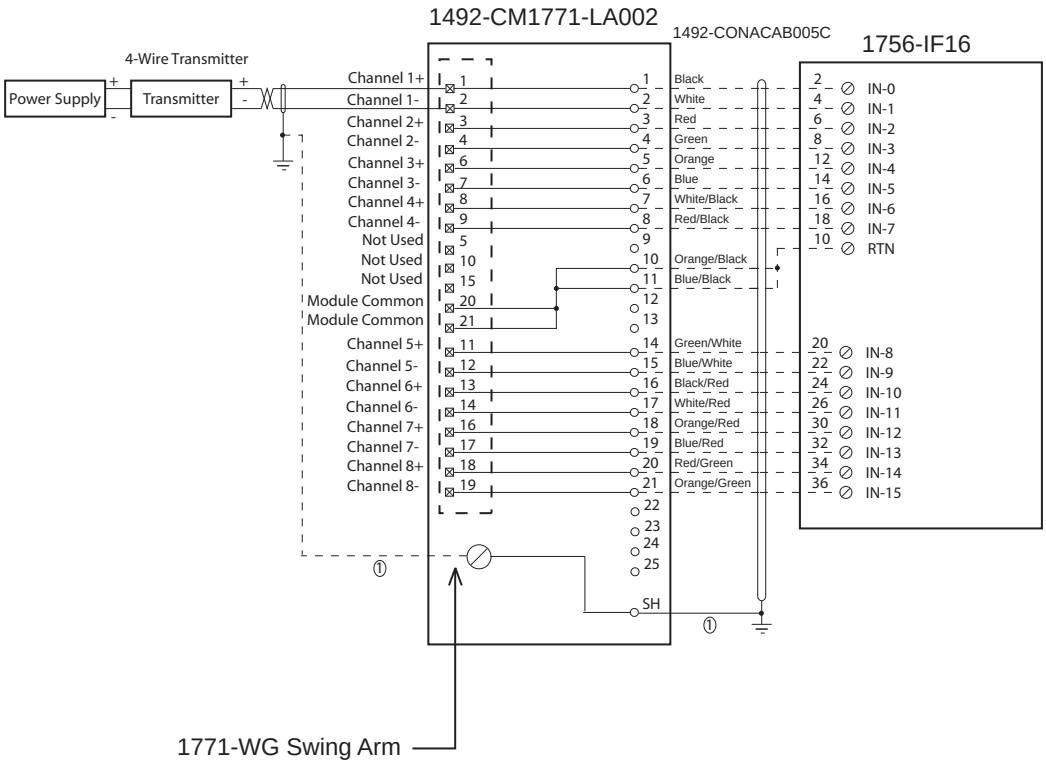

CONVERSION MODULE INSTALLATION AND APPLICATION CONSIDERATIONS

① SHIELD GROUNDING: In some installations, the field wiring shield was grounded on the 1771 chassis. If this was the case, the installer must remove these shield connections from the 1771 chassis and they can be connected to the grounding stud on the 1492-CM1771-LA002 module. The pre-wired cable used between the 1492-CM1771-LA002 module and the 1756-IF16 [1492-CONACAB005C] provides a shield ground lug to ground the shield at the 1756 ControlLogix chassis, this must be connected. Do NOT connect this ground lug to the conversion module grounding stud.

② This design assumes that all inputs on the1771-IFE were connected to voltage transmitters. If there was a mix of current and voltage transmitters, then modification of the pre-wired cable [1492-CONACAB005C] will need to occur at the 1756-IF16 terminal block. Refer to the 1756-IF16 Installation Manual for modification details.

③ The 1771-IFE analog input ranges were configured via software, as is the input range for the 1756-IF16. Please ensure the correct input range is configured in the 1756-IF16.

④ Refer to your 1771-IFE and 1756-IF16 Installation and User Manuals for additional information concerning comparisons of module wiring, features and configuration details.

41170-947 (1)

1771-IFE to 1756-IF16 Single End Current

IMPORTANT	There are several key application considerations and system specifications (bottom of drawing) when using these components (conversion module, cable and input module). Read and understand these considerations before installation.

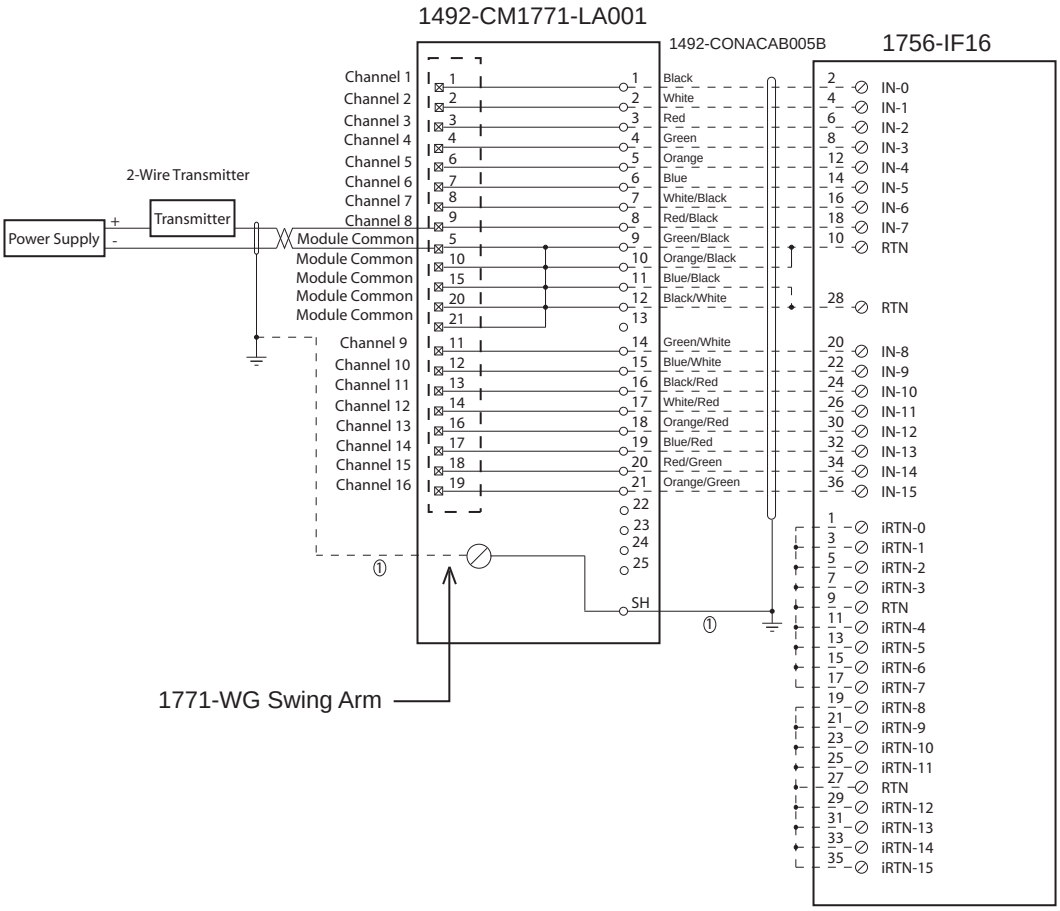

CONVERSION MODULE INSTALLATION AND APPLICATION CONSIDERATIONS

① SHIELD GROUNDING: In some installations, the field wiring shield was grounded on the 1771 chassis. If this was the case, the installer must remove these shield connections from the 1771 chassis and they can be connected to the grounding stud on the 1492-CM1771-LA001 module. The pre-wired cable used between the 1492-CM1771-LA001 module and the 1756-IF16 [1492-CONACAB005B] provides a shield ground lug to ground the shield at the 1756 ControlLogix chassis, this must be connected. Do NOT connect this ground lug to the conversion module grounding stud.

② This design assumes that all inputs on the1771-IFE were connected to current transmitters. If there was a mix of current and voltage transmitters, then modification of the pre-wired cable [1492-CONACAB005B] will need to occur at the 1756-IF16 terminal block. Refer to the 1756-IF16 Installation Manual for modification details.

③ The 1771-IFE analog input ranges were configured via software, as is the input range for the 1756-IF16. Please ensure the correct input range is configured in the 1756-IF16.

41170-944 (1)

④ Refer to your 1771-IFE and 1756-IF16 Installation and User Manuals for additional information concerning comparisons of module wiring, features and configuration details.

1771-IFE to 1756-IF16 Single End Voltage

IMPORTANT	There are several key application considerations and system specifications (bottom of drawing) when using these components (conversion module, cable and input module). Read and understand these considerations before installation.

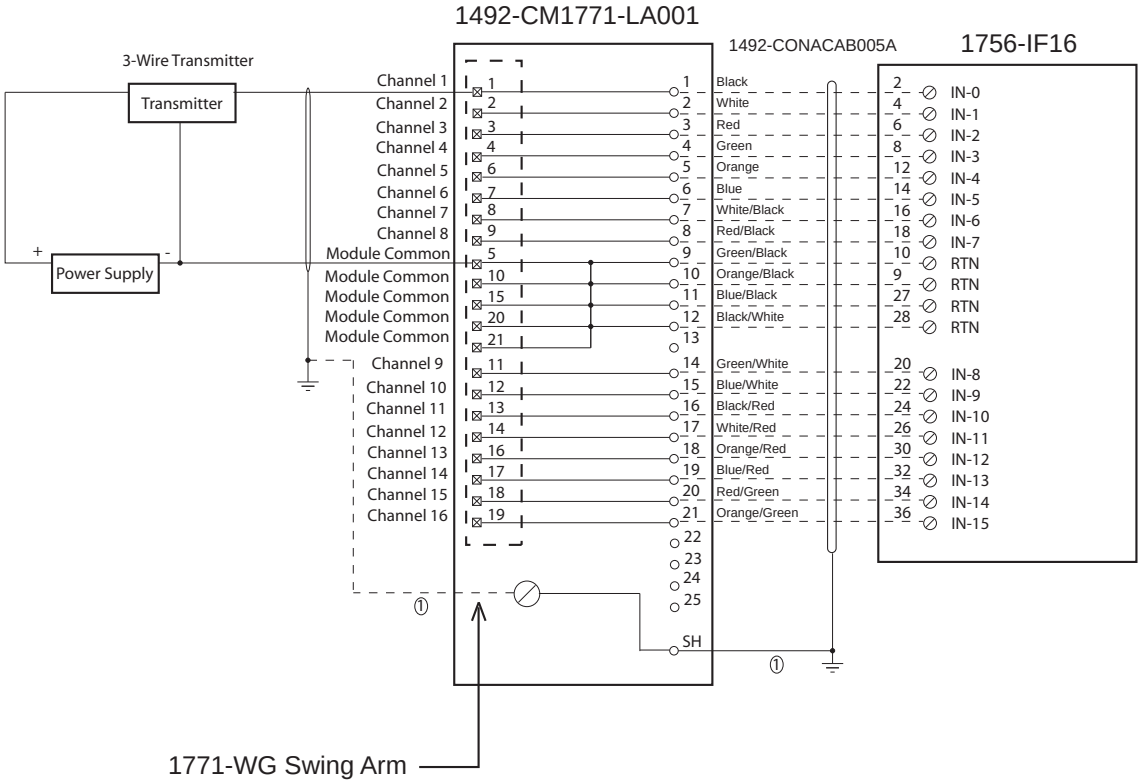

CONVERSION MODULE INSTALLATION AND APPLICATION CONSIDERATIONS

① SHIELD GROUNDING: In some installations, the field wiring shield was grounded on the 1771 chassis. If this was the case, the installer must remove these shield connections from the 1771 chassis and they can be connected to the grounding stud on the 1492-CM1771-LA001 module. The pre-wired cable used between the 1492-CM1771-LA001 module and the 1756-IF16 [1492-CONACAB005A] provides a shield ground lug to ground the shield at the 1756 ControlLogix chassis, this must be connected. Do NOT connect this ground lug to the conversion module grounding stud.

② This design assumes that all inputs on the1771-IFE were connected to voltage transmitters. If there was a mix of current and voltage transmitters, then modification of the pre-wired cable [1492-CONACAB005A] will need to occur at the 1756-IF16 terminal block. Refer to the 1756-IF16 Installation Manual for modification details.

③ The 1771-IFE analog input ranges were configured via software, as is the input range for the 1756-IF16. Please ensure the correct input range is configured in the 1756-IF16.

④ Refer to your 1771-IFE and 1756-IF16 Installation and User Manuals for additional information concerning comparisons of module wiring, features and configuration details.

41170-945 (1)

1771-IFF to 1756-IF16 Differential Current

IMPORTANT There are several key application considerations and system specifications (bottom of drawing) when using these components (conversion module, cable and input module). Read and understand these considerations before installation.

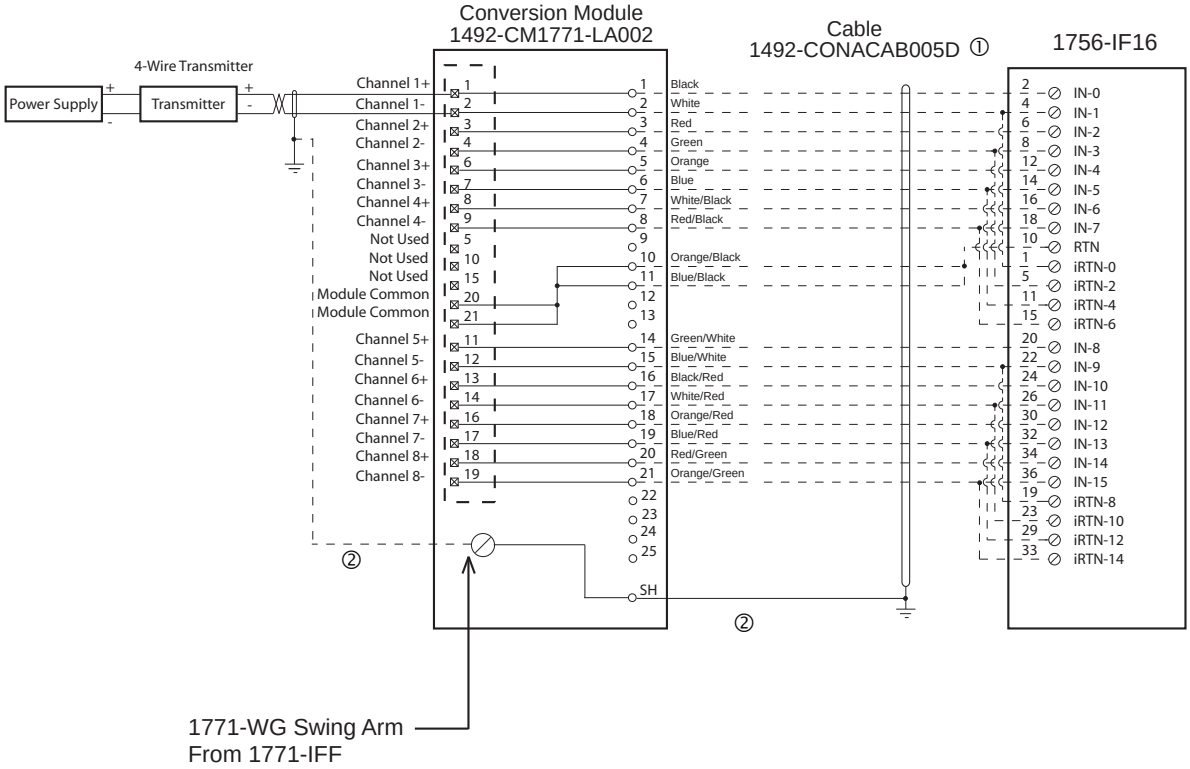

CONVERSION MODULE INSTALLATION AND APPLICATION CONSIDERATIONS

① This Bul. 1492 cable consists of a cable wired to one 1756-IF16 RTB. Recommended cable lengths of 0.5M or 1.0M (005=0.5M, 010=1.0M). See table 2 for other lengths.

② SHIELD GROUNDING: In some installations, the field wiring shield was grounded on the 1771 chassis. If this was the case, the installer must remove these shield connections from the 1771 chassis and they can be connected to the grounding stud on the 1492-CM1771-LA002 module. The pre-wired cable used between the 1492-CM1771-LA002 module and the 1756-IF16 [1492-CONACAB005D] provides a shield ground lug to ground the shield at the 1756 ControlLogix chassis, this must be connected. Do NOT connect this ground lug to the conversion module grounding stud.

③ This design assumes that all inputs on the1771-IFF were connected to current transmitters. If there was a mix of current and voltage transmitters, then modification of the pre-wired cable [1492-CONACAB005D] will need to occur at the 1756-IF16 terminal block. Refer to the 1756-IF16 Installation Manual for modification details.

④ The 1771-IFF analog input ranges were configured via software, as is the input range for the 1756-IF16. Please ensure the correct input range is configured in the 1756-IF16.

⑤ Refer to your 1771-IFF and 1756-IF16 Installation and User Manuals for additional information concerning comparisons of module wiring, features and configuration details.

41171-025 (00)

1771-IFF to 1756-IF16 Differential Voltage

IMPORTANT	There are several key application considerations and system specifications (bottom of drawing) when using these components (conversion module, cable and input module). Read and understand these considerations before installation.

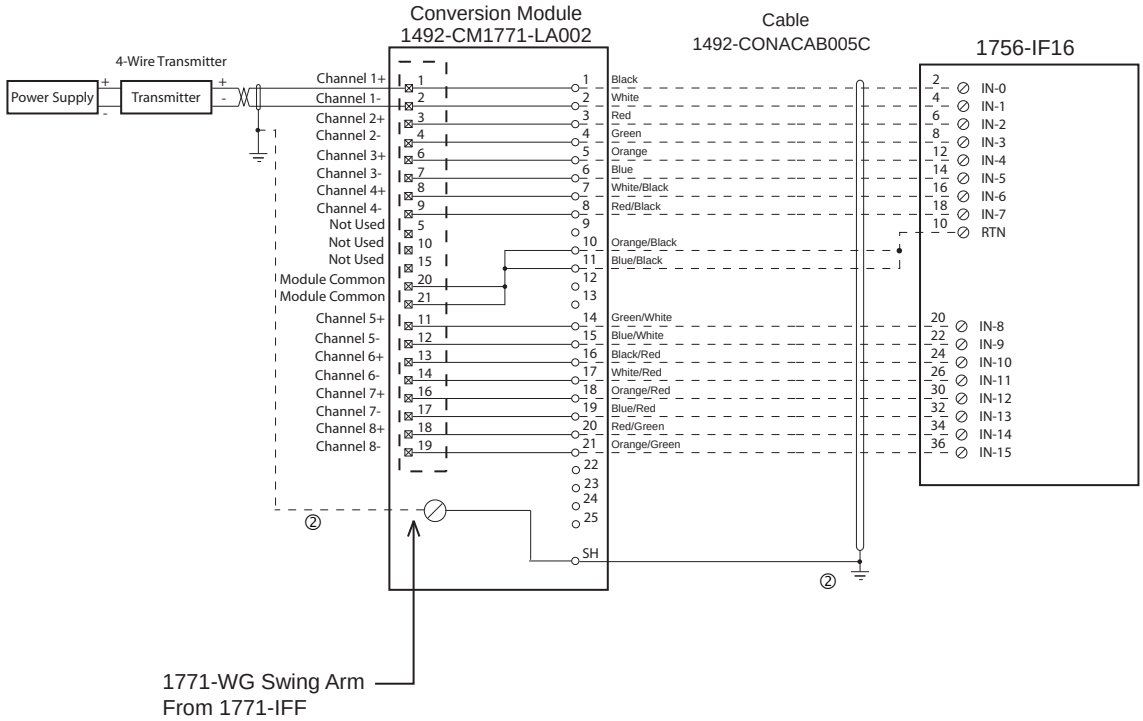

CONVERSION MODULE INSTALLATION AND APPLICATION CONSIDERATIONS

① This Bul. 1492 cable consists of a cable wired to one 1756-IF16 RTB. Recommended cable lengths of 0.5M or 1.0M (005=0.5M, 010=1.0M). See table 2 for other lengths.

② SHIELD GROUNDING: In some installations, the field wiring shield was grounded on the 1771 chassis. If this was the case, the installer must remove these shield connections from the 1771 chassis and they can be connected to the grounding stud on the 1492-CM1771-LA002 module. The pre-wired cable used between the 1492-CM1771-LA002 module and the 1756-IF16 [1492-CONACAB005C] provides a shield ground lug to ground the shield at the 1756 ControlLogix chassis, this must be connected. Do NOT connect this ground lug to the conversion module grounding stud.

③ This design assumes that all inputs on the1771-IFF were connected to voltage transmitters. If there was a mix of current and voltage transmitters, then modification of the pre-wired cable [1492-CONACAB005C] will need to occur at the 1756-IF16 terminal block. Refer to the 1756-IF16 Installation Manual for modification details.

④ The 1771-IFF analog input ranges were configured via software, as is the input range for the 1756-IF16. Please ensure the correct input range is configured in the 1756-IF16.

⑤ Refer to your 1771-IFF and 1756-IF16 Installation and User Manuals for additional information concerning comparisons of module wiring, features and configuration details.

41171-026 (00)

1771-IFF to 1756-IF16 Single End Current

IMPORTANT	There are several key application considerations and system specifications (bottom of drawing) when using these components (conversion module, cable and input module). Read and understand these considerations before installation.

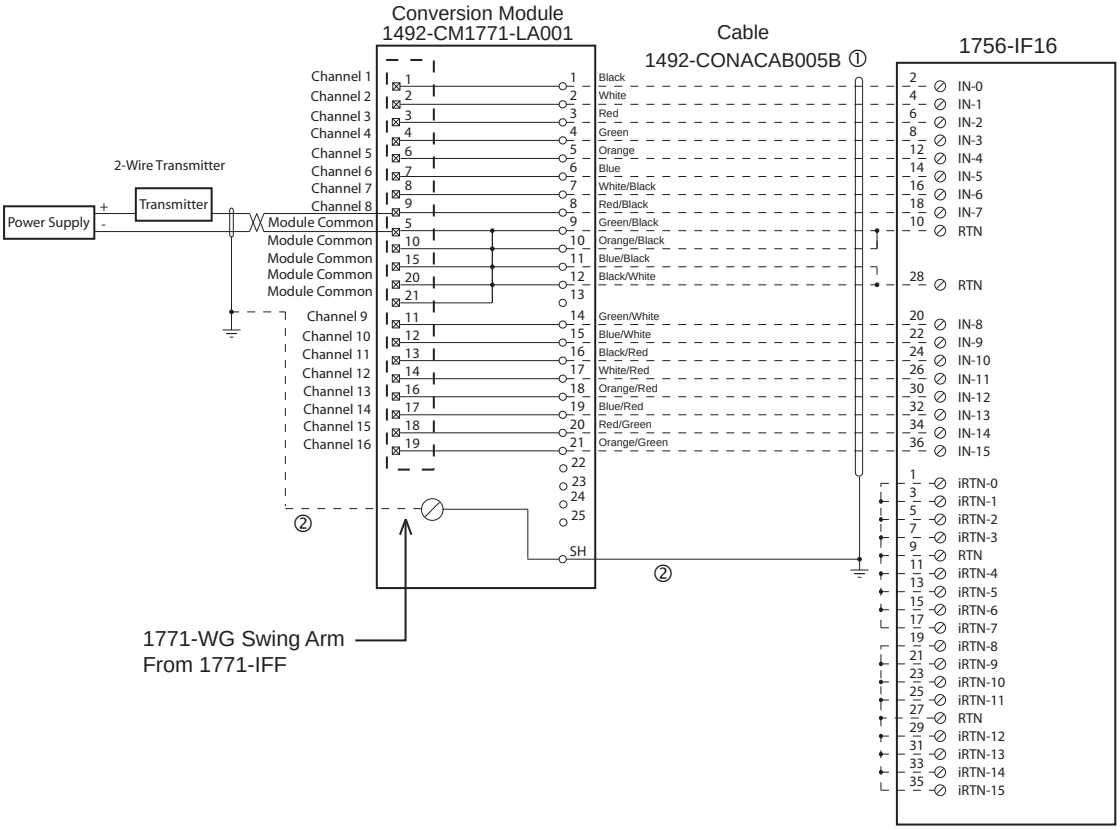

CONVERSION MODULE INSTALLATION AND APPLICATION CONSIDERATIONS

① This Bul. 1492 cable consists of a cable wired to one 1756-IF16 RTB. Recommended cable lengths of 0.5M or 1.0M (005=0.5M, 010=1.0M). See table 2 for other lengths.

② SHIELD GROUNDING: In some installations, the field wiring shield was grounded on the 1771 chassis. If this was the case, the installer must remove these shield connections from the 1771 chassis and they can be connected to the grounding stud on the 1492-CM1771-LA001 module. The pre-wired cable used between the 1492-CM1771-LA001 module and the 1756-IF16 [1492-CONACAB005B] provides a shield ground lug to ground the shield at the 1756 ControlLogix chassis, this must be connected. Do NOT connect this ground lug to the conversion module grounding stud.

③ This design assumes that all inputs on the1771-IFF were connected to current transmitters. If there was a mix of current and voltage transmitters, then modification of the pre-wired cable [1492-CONACAB005B] will need to occur at the 1756-IF16 terminal block. Refer to the 1756-IF16 Installation Manual for modification details.

④ The 1771-IFF analog input ranges were configured via software, as is the input range for the 1756-IF16. Please ensure the correct input range is configured in the 1756-IF16.

⑤ Refer to your 1771-IFF and 1756-IF16 Installation and User Manuals for additional information concerning comparisons of module wiring, features and configuration details.

41171-023 (00)

1771-IFF to 1756-IF16 Single End Voltage

IMPORTANT There are several key application considerations and system specifications (bottom of drawing) when using these components (conversion module, cable and input module). Read and understand these considerations before installation.

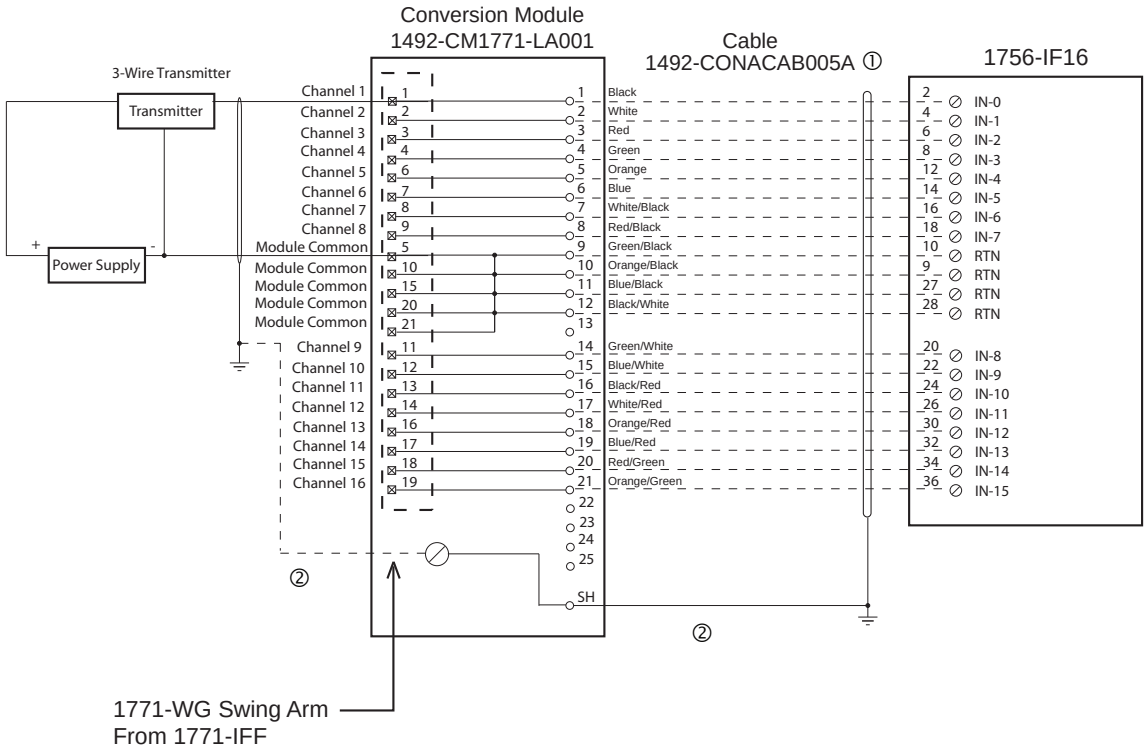

CONVERSION MODULE INSTALLATION AND APPLICATION CONSIDERATIONS

① This Bul. 1492 cable consists of a cable wired to one 1756-IF16 RTB. Recommended cable lengths of 0.5M or 1.0M (005=0.5M, 010=1.0M). See table 2 for other lengths.

② SHIELD GROUNDING: In some installations, the field wiring shield was grounded on the 1771 chassis. If this was the case, the installer must remove these shield connections from the 1771 chassis and they can be connected to the grounding stud on the 1492-CM1771-LA001 module. The pre-wired cable used between the 1492-CM1771-LA001 module and the 1756-IF16 [1492-CONACAB005A] provides a shield ground lug to ground the shield at the 1756 ControlLogix chassis, this must be connected. Do NOT connect this ground lug to the conversion module grounding stud.

③ This design assumes that all inputs on the1771-IFF were connected to voltage transmitters. If there was a mix of current and voltage transmitters, then modification of the pre-wired cable [1492-CONACAB005A] will need to occur at the 1756-IF16 terminal block. Refer to the 1756-IF16 Installation Manual for modification details.

④ The 1771-IFF analog input ranges were configured via software, as is the input range for the 1756-IF16. Please ensure the correct input range is configured in the 1756-IF16.

⑤ Refer to your 1771-IFF and 1756-IF16 Installation and User Manuals for additional information concerning comparisons of module wiring, features and configuration details.

41171-024 (00)

1771-IL to 1756-IF8I Current

IMPORTANT	There are several key application considerations and system specifications (bottom of drawing) when using these components (conversion module, cable and input module). Read and understand these considerations before installation.

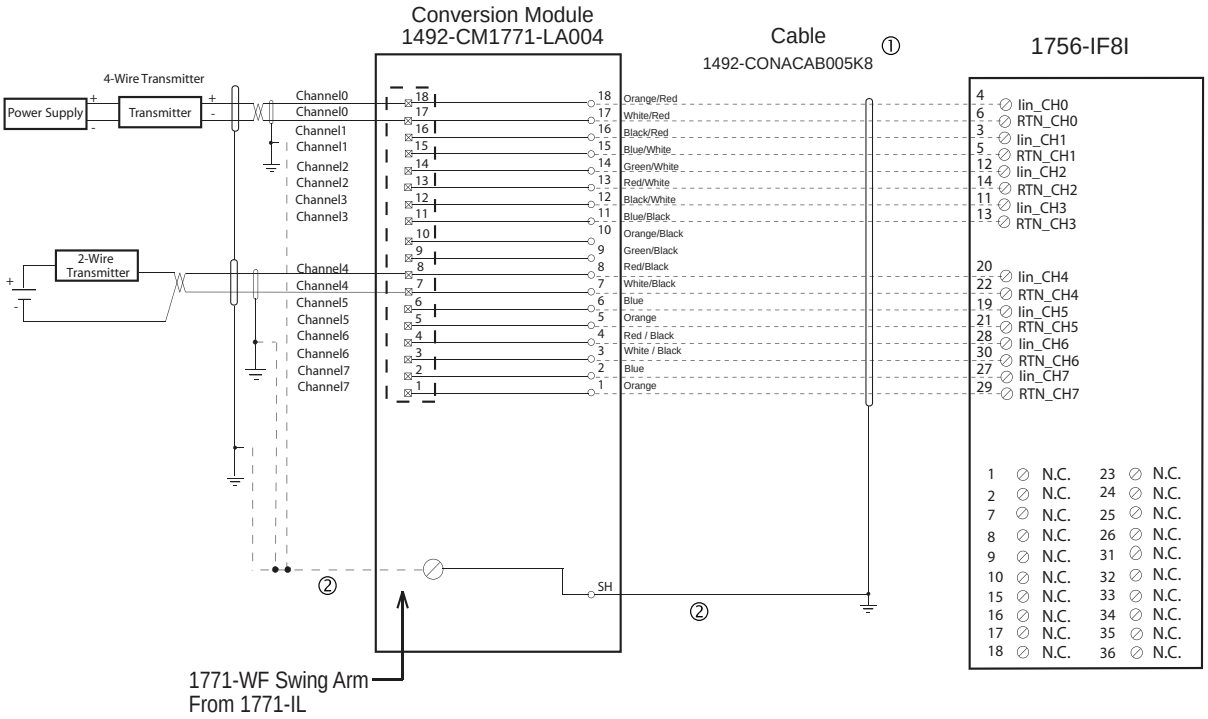

CONVERSION MODULE INSTALLATION AND APPLICATION CONSIDERATIONS

① This Bul. 1492 cable consists of a cable wired to one 1756-IF6I RTB. Recommended cable lengths of 0.5M or 1.0M (005=0.5M, 010=1.0M).

② SHIELD GROUNDING: In some installations, the field wiring shield was grounded on the 1771 chassis. If this was the case, the installer must remove these shield connections from the 1771 chassis and they can be connected to the grounding stud on the 1492-CM1771-LA004 module. The pre-wired cable used between the 1492-CM1771-LA004 module and the 1756-IF8I [1492-CONACAB005K8] provides a shield ground lug to ground the shield at the 1756 ControlLogix chassis, this must be connected. Do NOT connect this ground lug to the conversion module grounding stud.

③ The 1771-IL input configuration was software configured, as is the 1756-IF8I. Please ensure the correct configuration in the 1756-IF8I.

④ Refer to your 1771-IL and 1756-IF8I Installation and User Manuals for additional information concerning comparisons of module wiring, features and configuration details.

1771-IL to 1756-IF8I Voltage

IMPORTANT	There are several key application considerations and system specifications (bottom of drawing) when using these components (conversion module, cable and input module). Read and understand these considerations before installation.

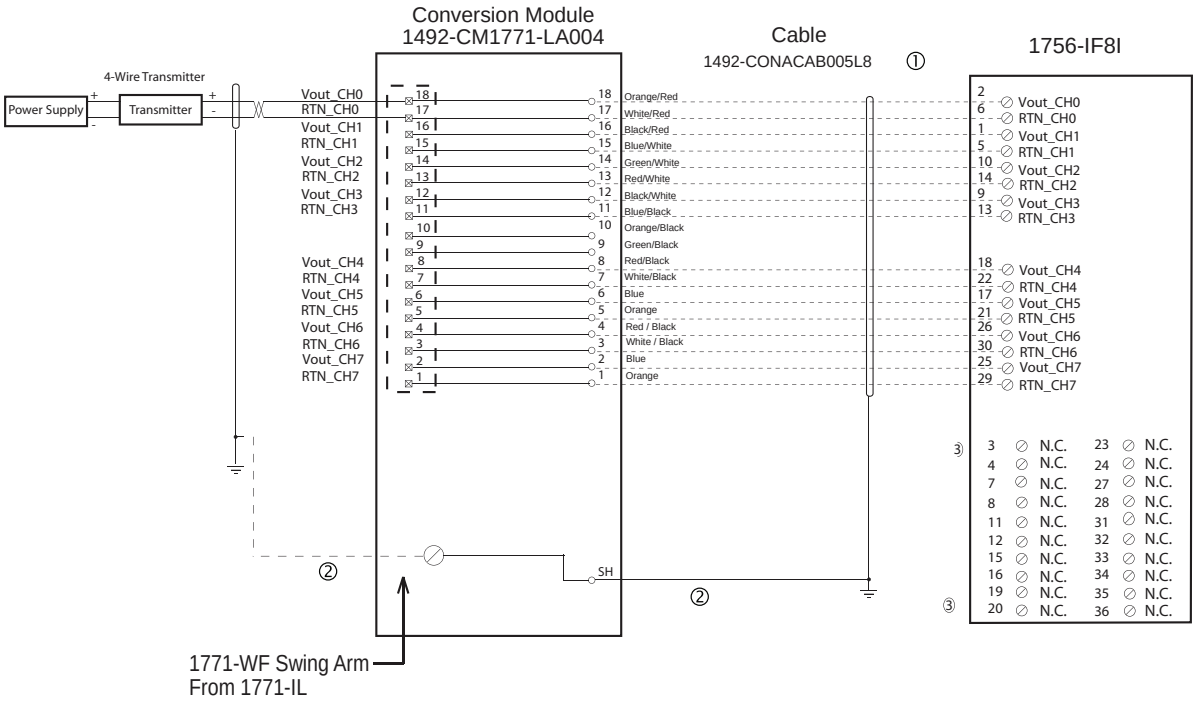

① This Bul. 1492 cable consists of a cable wired to one 1756-IF8I RTB. Recommended cable lengths of 0.5M or 1.0M (005=0.5M, 010=1.0M).

② SHIELD GROUNDING: In some installations, the field wiring shield was grounded on the 1771 chassis. If this was the case, the installer must remove these shield connections from the 1771 chassis and they can be connected to the grounding stud on the 1492-CM1771-LA004 module. The pre-wired cable used between the 1492-CM1771-LA004 module and the 1756-IF8I [1492-CONACAB005L8] provides a shield ground lug to ground the shield at the 1756 ControlLogix chassis, this must be connected. Do NOT connect this ground lug to the conversion module grounding stud.

③ The 1771-IL input configuration was software configured, as is the 1756-IF8I. Please ensure the correct configuration in the 1756-IF8I.

④ Refer to your 1771-IL and 1756-IF8I Installation and User Manuals for additional information concerning comparisons of module wiring, features and configuration details.

1771-IL to 1756-IF6I — 6-ch Current

IMPORTANT	There are several key application considerations and system specifications (bottom of drawing) when using these components (conversion module, cable and input module). Read and understand these considerations before installation.

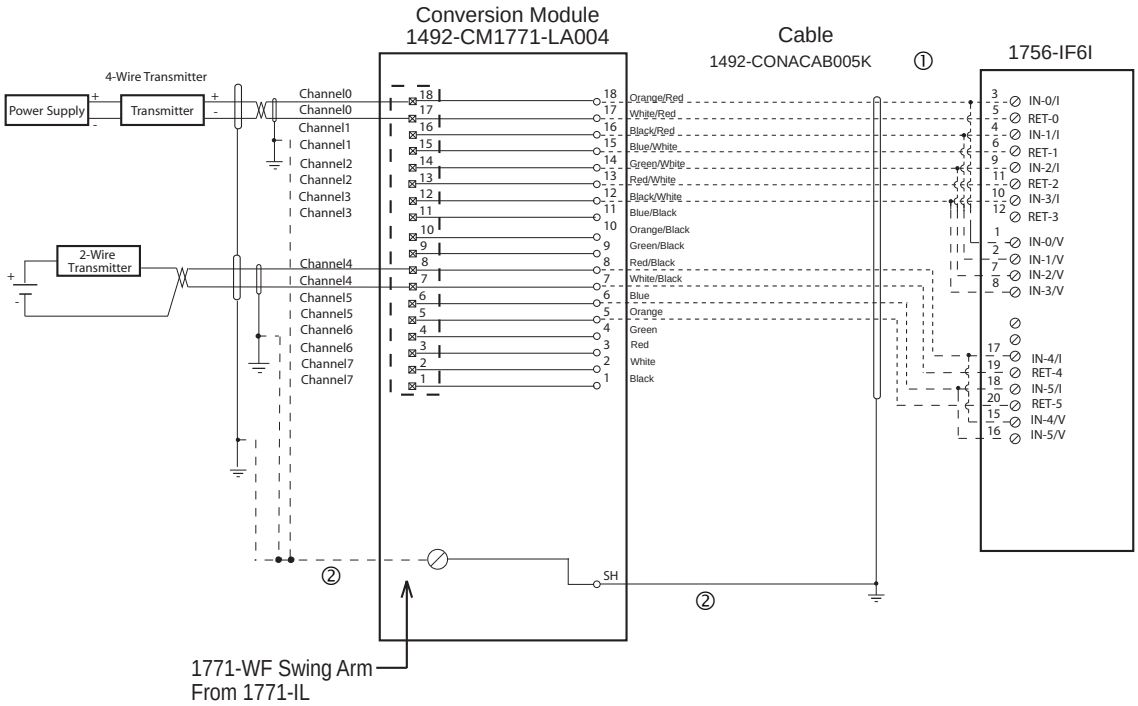

CONVERSION MODULE INSTALLATION AND APPLICATION CONSIDERATIONS

① This Bul. 1492 cable consists of a cable wired to one 1756-IF6I RTB. Recommended cable lengths of 0.5M or 1.0M (005=0.5M, 010=1.0M). See table 2 for other lengths.

② SHIELD GROUNDING: In some installations, the field wiring shield was grounded on the 1771 chassis. If this was the case, the installer must remove these shield connections from the 1771 chassis and they can be connected to the grounding stud on the 1492-CM1771-LA004 module. The pre-wired cable used between the 1492-CM1771-LA004 module and the 1756-IF6I [1492-CONACAB005K] provides a shield ground lug to ground the shield at the 1756 ControlLogix chassis, this must be connected. Do NOT connect this ground lug to the conversion module grounding stud.

③ The 1771-IL input configuration was software configured, as is the 1756-IF6I. Please ensure the correct configuration in the 1756-IF6I.

④ Refer to your 1771-IL and 1756-IF6I Installation and User Manuals for additional information concerning comparisons of module wiring, features and configuration details.

41171-030 (00)

1771-IL to 1756-IF6I — 6-ch Voltage

IMPORTANT	There are several key application considerations and system specifications (bottom of drawing) when using these components (conversion module, cable and input module). Read and understand these considerations before installation.

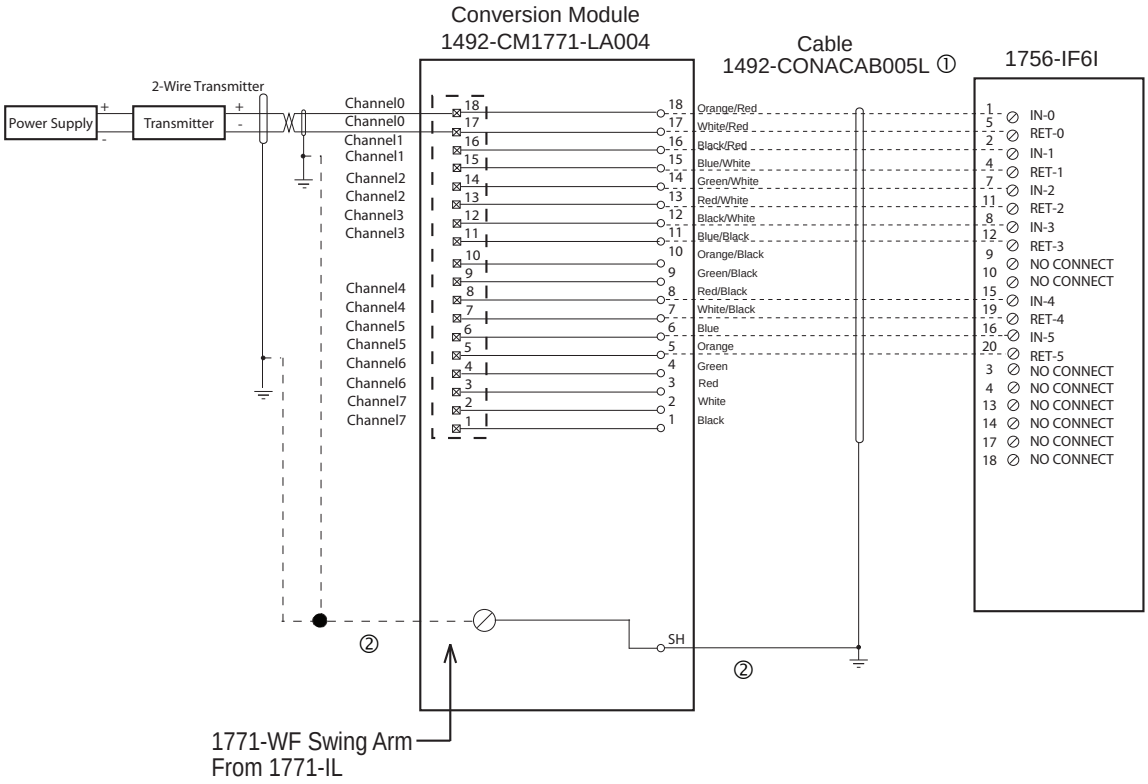

① This Bul. 1492 cable consists of a cable wired to one 1756-IF6I RTB. Recommended cable lengths of 0.5M or 1.0M (005=0.5M, 010=1.0M). See table 2 for other lengths.

② SHIELD GROUNDING: In some installations, the field wiring shield was grounded on the 1771 chassis. If this was the case, the installer must remove these shield connections from the 1771 chassis and they can be connected to the grounding stud on the 1492-CM1771-LA004 module. The pre-wired cable used between the 1492-CM1771-LA004 module and the 1756-IF6I [1492-CONACAB005L] provides a shield ground lug to ground the shield at the 1756 ControlLogix chassis, this must be connected. Do NOT connect this ground lug to the conversion module grounding stud.

③ The 1771-IL input configuration was software configured, as is the 1756-IF6I. Please ensure the correct configuration in the 1756-IF6I.

④ Refer to your 1771-IL and 1756-IF6I Installation and User Manuals for additional information concerning comparisons of module wiring, features and configuration details.

41171-029 (00)

1771-IL to 1756-IF6I — (2 x 4-ch) Current

IMPORTANT	There are several key application considerations and system specifications (bottom of drawing) when using these components (conversion module, cable and input module). Read and understand these considerations before installation.

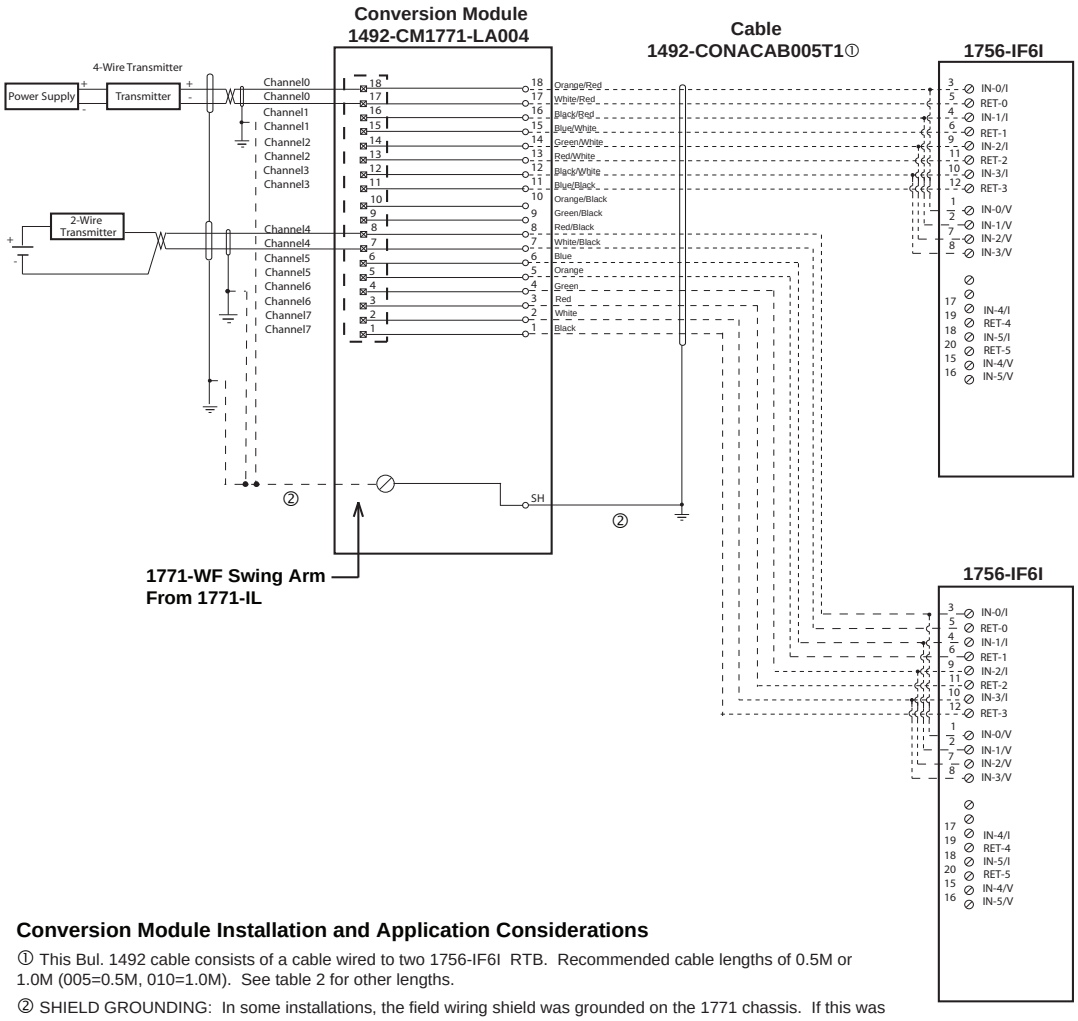

Conversion Module Installation and Application Considerations

① This Bul. 1492 cable consists of a cable wired to two 1756-IF6I RTB. Recommended cable lengths of 0.5M or 1.0M (005=0.5M, 010=1.0M). See table 2 for other lengths.

② SHIELD GROUNDING: In some installations, the field wiring shield was grounded on the 1771 chassis. If this was the case, the installer must remove these shield connections from the 1771 chassis and they can be connected to the grounding stud on the 1492-CM1771-LA004 module. The pre-wired cable used between the 1492-CM1771-LA004 module and the 1756-IF6I [1492-CONACAB005T1] provides a shield ground lug to ground the shield at the 1756 ControlLogix chassis, this must be connected. Do NOT connect this ground lug to the conversion module grounding stud.

③ The 1771-IL input configuration was software configured, as is the 1756-IF6I. Please ensure the correct configuration in the 1756-IF6I.

④ Refer to your 1771-IL and 1756-IF6I Installation and User Manuals for additional information concerning comparisons of module wiring, features and configuration details.

⑤ This configuration uses two (2) 1756-IF6I output modules to replace a single 1771-IL output module. This may require the use of a larger 1756 I/O chassis and conversion mounting assembly. Ensure there is sufficient panel space to allow for this possibility.

[Reference Doc: 41171-032 (Version 00)]

1771-IL to 1756-IF6I — (2 x 4-ch) Voltage

IMPORTANT	There are several key application considerations and system specifications (bottom of drawing) when using these components (conversion module, cable and input module). Read and understand these considerations before installation.

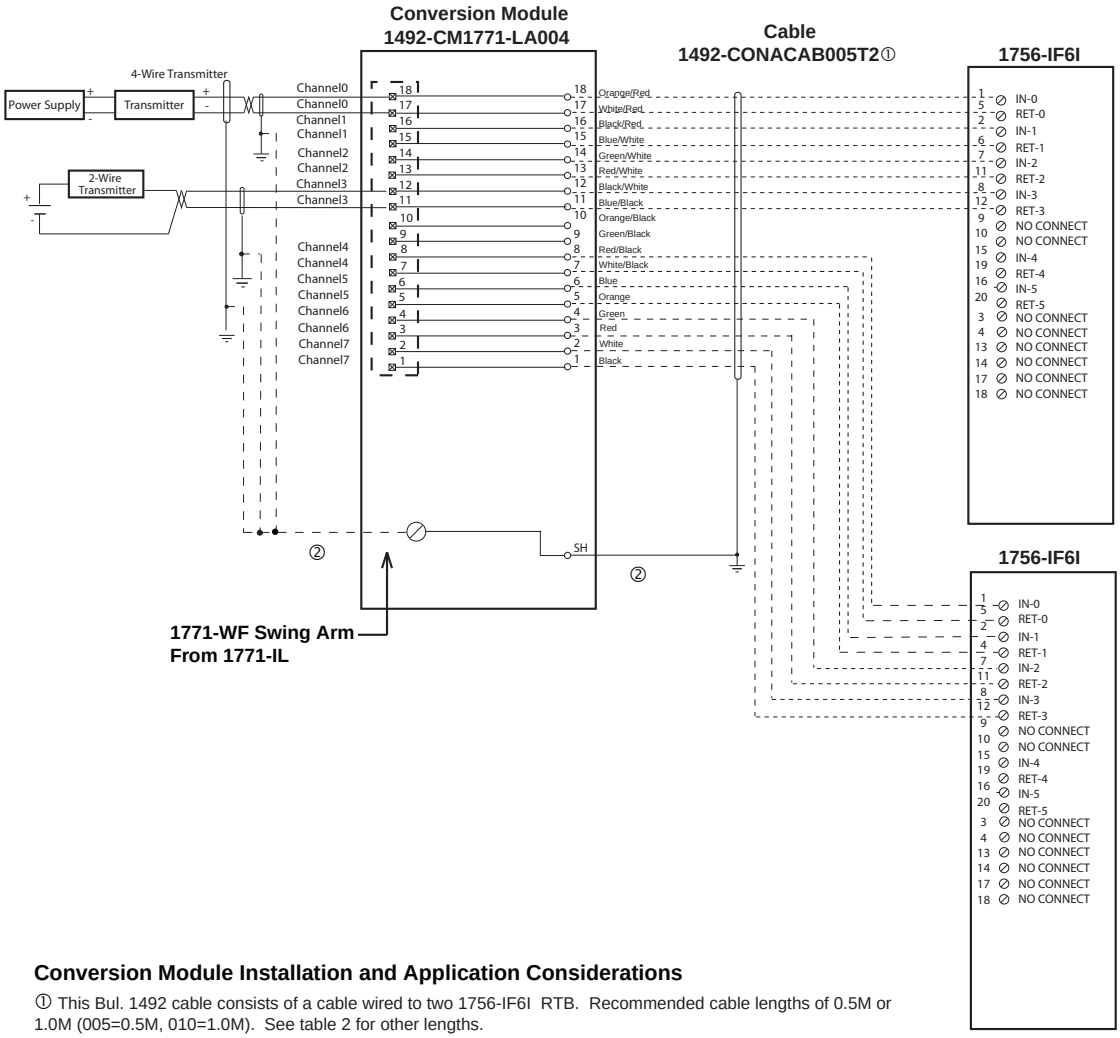

Conversion Module Installation and Application Considerations

① This Bul. 1492 cable consists of a cable wired to two 1756-IF6I RTB. Recommended cable lengths of 0.5M or 1.0M (005=0.5M, 010=1.0M). See table 2 for other lengths.

② SHIELD GROUNDING: In some installations, the field wiring shield was grounded on the 1771 chassis. If this was the case, the installer must remove these shield connections from the 1771 chassis and they can be connected to the grounding stud on the 1492-CM1771-LA004 module. The pre-wired cable used between the 1492-CM1771-LA004 module and the 1756-IF6I [1492-CONACAB005T2] provides a shield ground lug to ground the shield at the 1756 ControlLogix chassis, this must be connected. Do NOT connect this ground lug to the conversion module grounding stud.

③ The 1771-IL input configuration was software configured, as is the 1756-IF6I. Please ensure the correct configuration in the 1756-IF6I.

④ Refer to your 1771-IL and 1756-IF6I Installation and User Manuals for additional information concerning comparisons of module wiring, features and configuration details.

⑤ This configuration uses two (2) 1756-IF6I output modules to replace a single 1771-IL output module. This may require the use of a larger 1756 I/O chassis and conversion mounting assembly. Ensure there is sufficient panel space to allow for this possibility.

41171-031 (00)

1771-IR to 1756-IRT8I

IMPORTANT	There are several key application considerations and system specifications (bottom of drawing) when using these components (conversion module, cable and output module). Read and understand these considerations before installation.

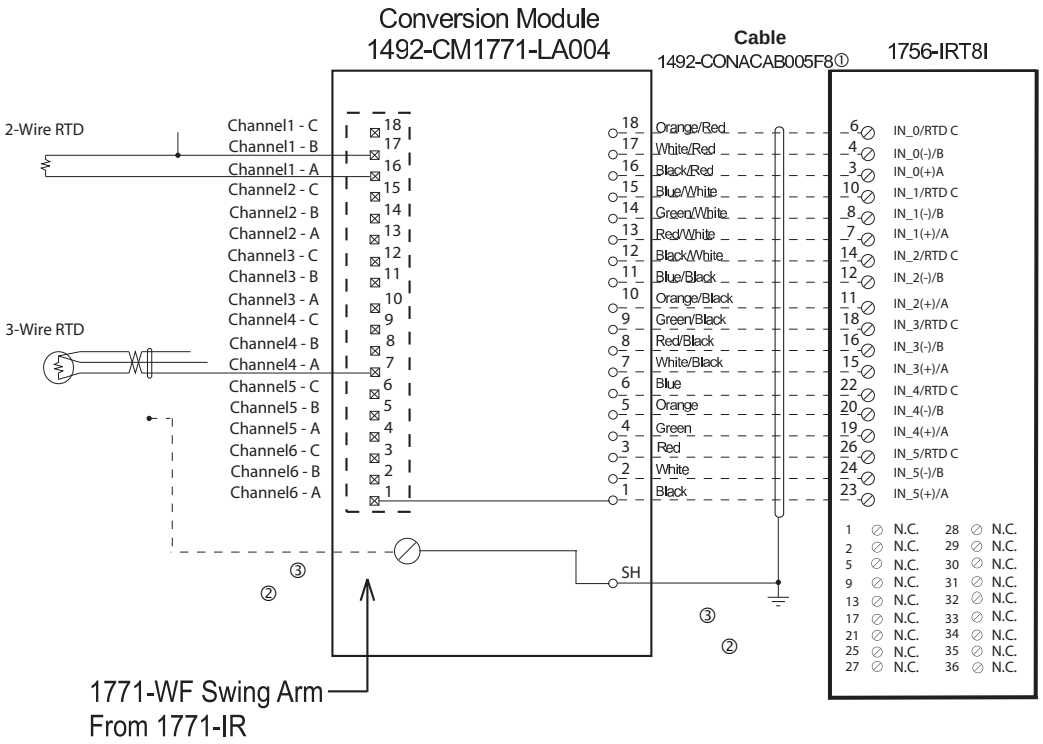

Conversion Module Installation and Application Considerations

① Cables are available in lengths of 0.5M or 1.0M (005=0.5M, 010=1.0M)

② SHIELD GROUNDING: In some installations, the field wiring shield was grounded on the 1771 chassis. If this was the case, the installer must remove these shield connections from the 1771 chassis and they can be connected to the grounding stud on the 1492-CM1771-LA004 module. The pre-wired cable used between the 1492-CM1771-LA004 module and the 1756-IRT8I [1492-CONACAB005F8] provides a shield ground lug to ground the shield at the 1756 ControlLogix chassis, this must be connected. Do NOT connect this ground lug to the conversion module grounding stud.

③ The 1771-IR input configuration was software configured, as is the 1756-IRT8I. Please ensure the correct configuration in the 1756-IRT8I.

④ Refer to your 1771-IR and 1756-IRT8I Installation and User Manuals for additional information concerning comparisons of module wiring, features and configuration details.

1771-IR to 1756-IR6I

IMPORTANT	There are several key application considerations and system specifications (bottom of drawing) when using these components (conversion module, cable and input module). Read and understand these considerations before installation.

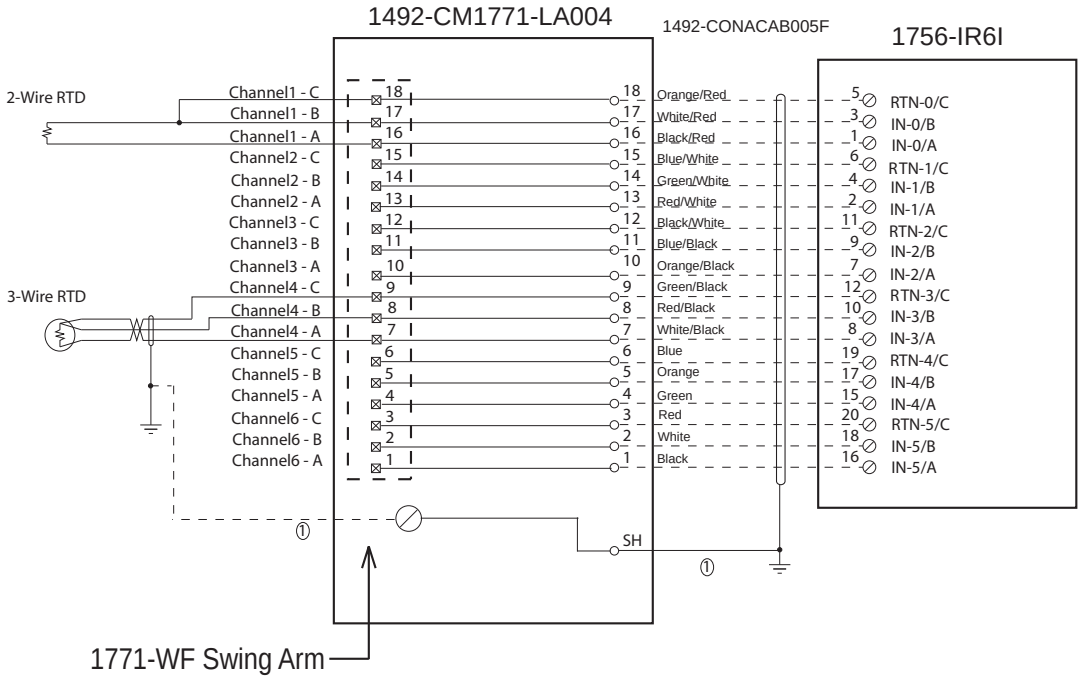

CONVERSION MODULE INSTALLATION AND APPLICATION CONSIDERATIONS

① SHIELD GROUNDING: In some installations, the field wiring shield was grounded on the 1771 chassis. If this was the case, the installer must remove these shield connections from the 1771 chassis and they can be connected to the grounding stud on the 1492-CM1771-LA004 module. The pre-wired cable used between the 1492-CM1771-LA004 module and the 1756-IR6I [1492-CONACAB005F] provides a shield ground lug to ground the shield at the 1756 ControlLogix chassis, this must be connected. Do NOT connect this ground lug to the conversion module grounding stud.

② The 1771-IR input configuration was software configured, as is the 1756-IR6I. Please ensure the correct configuration in the 1756-IR6I.

③ Refer to your 1771-IR and 1756-IR6I Installation and User Manuals for additional information concerning comparisons of module wiring, features and configuration details.

41170-950 (1)

1771-IXE to 1756-IT6I2

IMPORTANT	There are several key application considerations and system specifications (bottom of drawing) when using these components (conversion module, cable and input module). Read and understand these considerations before installation.

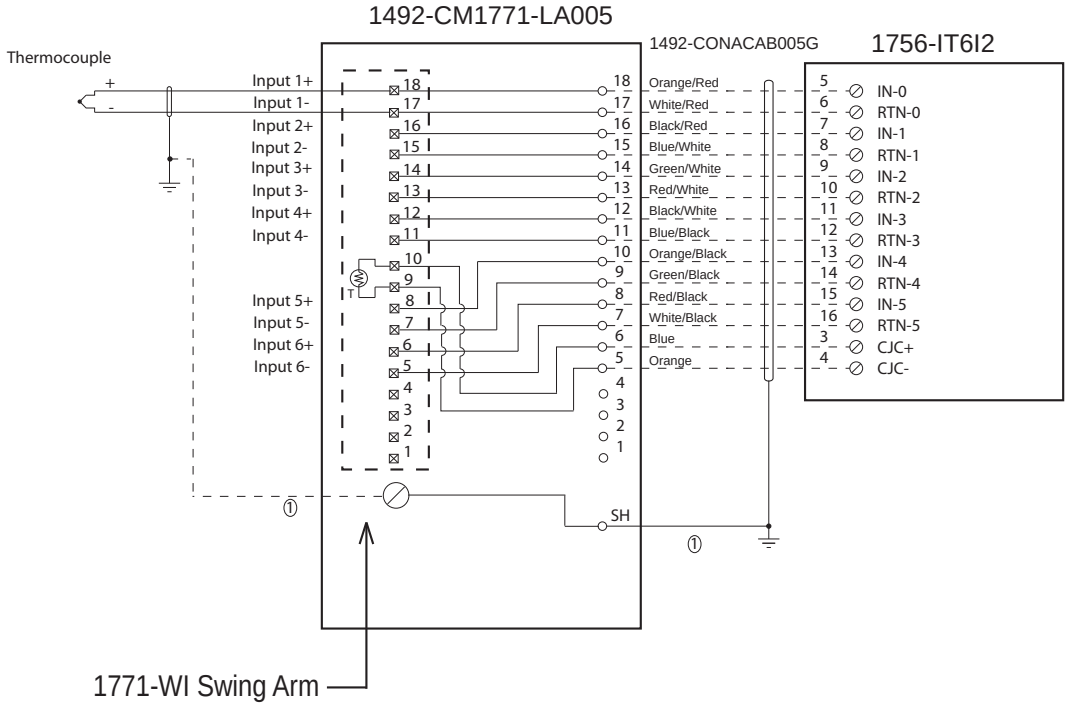

CONVERSION MODULE INSTALLATION AND APPLICATION CONSIDERATIONS

① SHIELD GROUNDING: In some installations, the field wiring shield was grounded on the 1771 chassis. If this was the case, the installer must remove these shield connections from the 1771 chassis and they can be connected to the grounding stud on the 1492-CM1771-LA005 module. The pre-wired cable used between the 1492-CM1771-LA005 module and the 1756-IT6I2 [1492-CONACAB005G] provides a shield ground lug to ground the shield at the 1756 ControlLogix chassis, this must be connected. Do NOT connect this ground lug to the conversion module grounding stud.

② The 1771-IXE has 8 input channels. The 1756-IT6I2 only has 6 input channels. This module combination can only be used to convert the signals if 6 or less channels were used on the 1771-IXE.

③ The 1771-IXE has built CJC (cold junction compensation) into the swing-arm. The conversion module [1492-CM1771-LA005] passes this CJC signal to the 1756-IT6I2. Ensure that the 1756-IT6I2 is configured for external CJC.

④ The 1771-IXE input configuration was software configured, as is the 1756-IT6I2. Please ensure the correct configuration in the 1756-IT6I2.

⑤ Refer to your 1771-IXE and 1756-IT6I2 Installation and User Manuals for additional information concerning comparisons of module wiring, features and configuration details.

41170-951 (1)

1771-IXE to 1756-IRT8I

IMPORTANT	There are several key application considerations and system specifications (bottom of drawing) when using these components (conversion module , cable and input module). Read and understand these considerations bef ore installation.

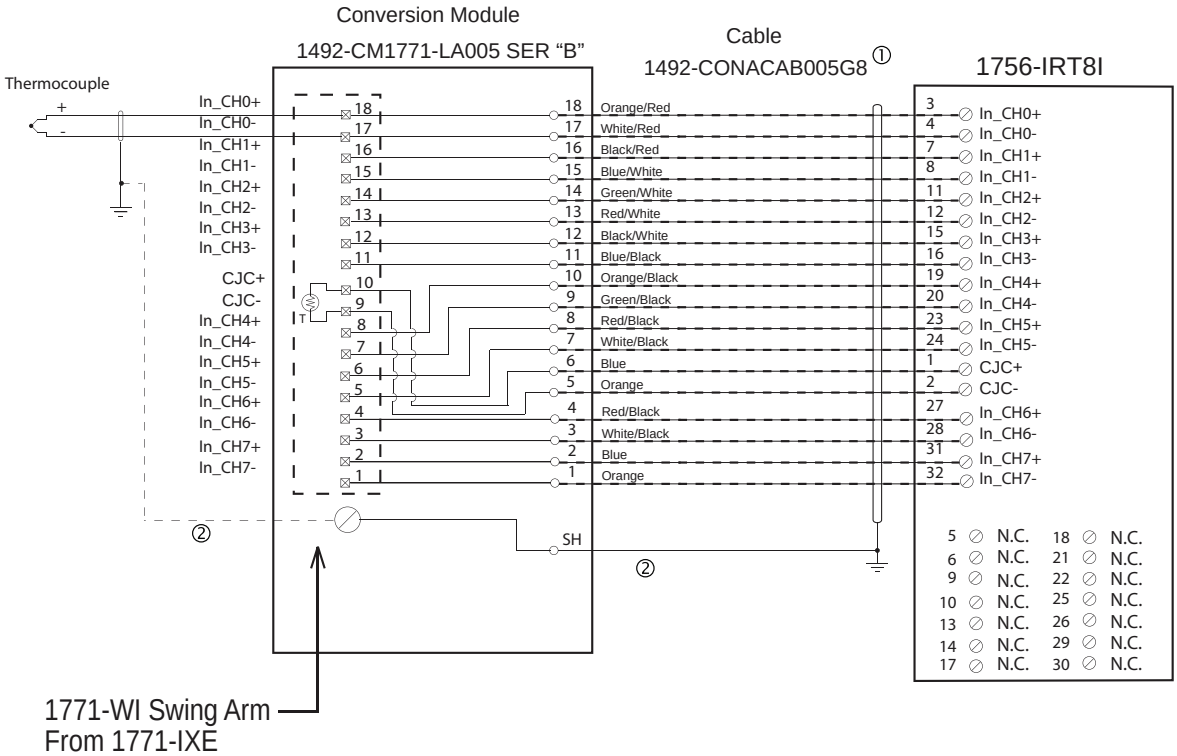

CONVERSION MODULE INSTALLATION AND APPLICATION CONSIDERATIONS

① This Bul. 1492 cable consists of a cable wired to one 1756-IRT8I RTB. Recommended cable lengths of 0.5M or 1.0M (005=0.5M, 010=1.0M).

② SHIELD GROUNDING: In some installations, the field wiring shield was grounded on the 1771 chassis. If this was the case, the installer must remove these shield connections from the 1771 chassis and they can be connected to the grounding stud on the 1492-CM1771-LA005 SER"B" module. The pre-wired cable used between the 1492-CM1771-LA005 SER"B" module and the 1756-IRT8I [1492-CONACAB005G8] provides a shield ground lug to ground the shield at the 1756 ControlLogix chassis, this must be connected. Do NOT connect this ground lug to the conversion module grounding stud.

③ The 1771-IXE has built CJC (cold junction compensation) into the swing-arm. The conversion module [1492-CM1771-LA005 SER"B"] passes this CJC signal to the 1756-IRT8I. Ensure that the 1756-IRT8I is configured for external CJC.

④ The 1771-IXE input configuration was software configured, as is the 1756-IRT8I. Please ensure the correct configuration in the 1756-IRT8I.

⑤ Refer to your 1771-IXE and 1756-IRT8I Installation and User Manuals for additional information concerning comparisons of module wiring, features and configuration details.

1771-IXHR to 1756-IT6I2

IMPORTANT	There are several key application considerations and system specifications (bottom of drawing) when using these components (conversion module, cable and input module). Read and understand these considerations before installation.

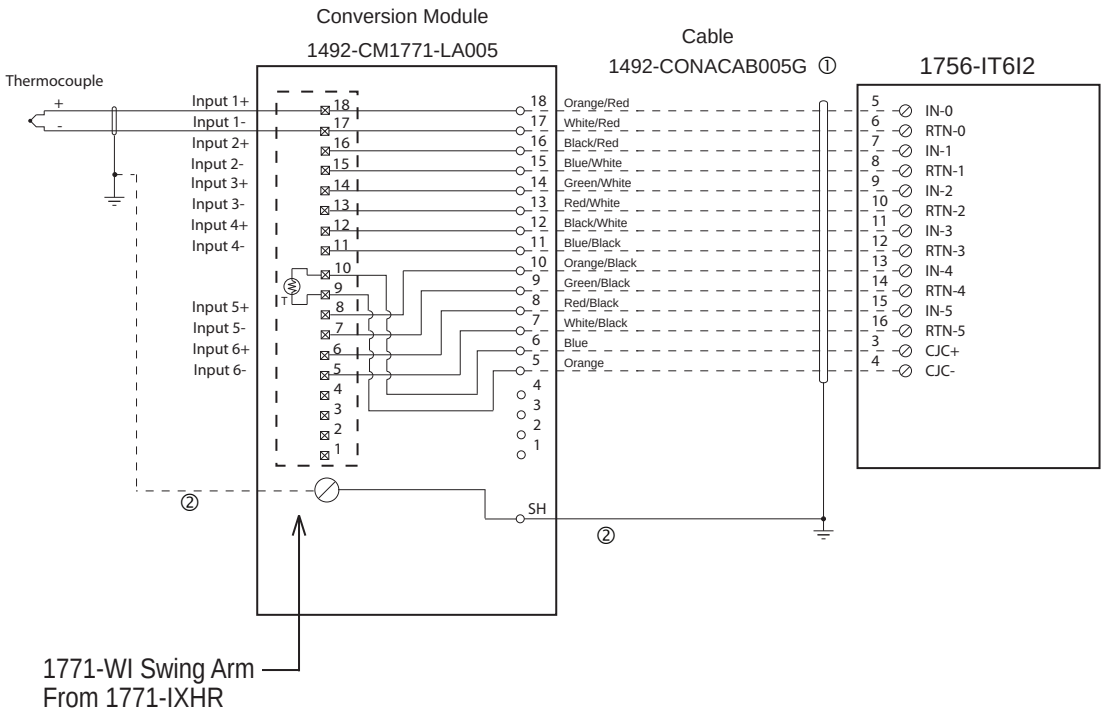

CONVERSION MODULE INSTALLATION AND APPLICATION CONSIDERATIONS

① This Bul. 1492 cable consists of a cable wired to one 1756-IT6I2 RTB. Recommended cable lengths of 0.5M or 1.0M (005=0.5M, 010=1.0M). See table 2 for other lengths.

② SHIELD GROUNDING: In some installations, the field wiring shield was grounded on the 1771 chassis. If this was the case, the installer must remove these shield connections from the 1771 chassis and they can be connected to the grounding stud on the 1492-CM1771-LA005 module. The pre-wired cable used between the 1492-CM1771-LA005 module and the 1756-IT6I2 [1492-CONACAB005G] provides a shield ground lug to ground the shield at the 1756 ControlLogix chassis, this must be connected. Do NOT connect this ground lug to the conversion module grounding stud.

③ The 1771-IXHR has 8 input channels. The 1756-IT6I2 only has 6 input channels. This module combination can only be used to convert the signals if 6 or less channels were used on the 1771-IHER.

④ The 1771-IXHR has built CJC (cold junction compensation) into the swing-arm. The conversion module [1492-CM1771-LA005] passes this CJC signal to the 1756-IT6I2. Ensure that the 1756-IT6I2 is configured for external CJC.

⑤ The 1771-IXHR input configuration was software configured, as is the 1756-IT6I2. Please ensure the correct configuration in the 1756-IT6I2.

⑥ Refer to your 1771-IXHR and 1756-IT6I2 Installation and User Manuals for additional information concerning comparisons of module wiring, features and configuration details.

41171-035 (00)

1771-IXHR to 1756-IRT8I

IMPORTANT	There are several key application considerations and system specifications (bottom of drawing) when using these components (conversion module, cable and input module). Read and understand these considerations before installation.

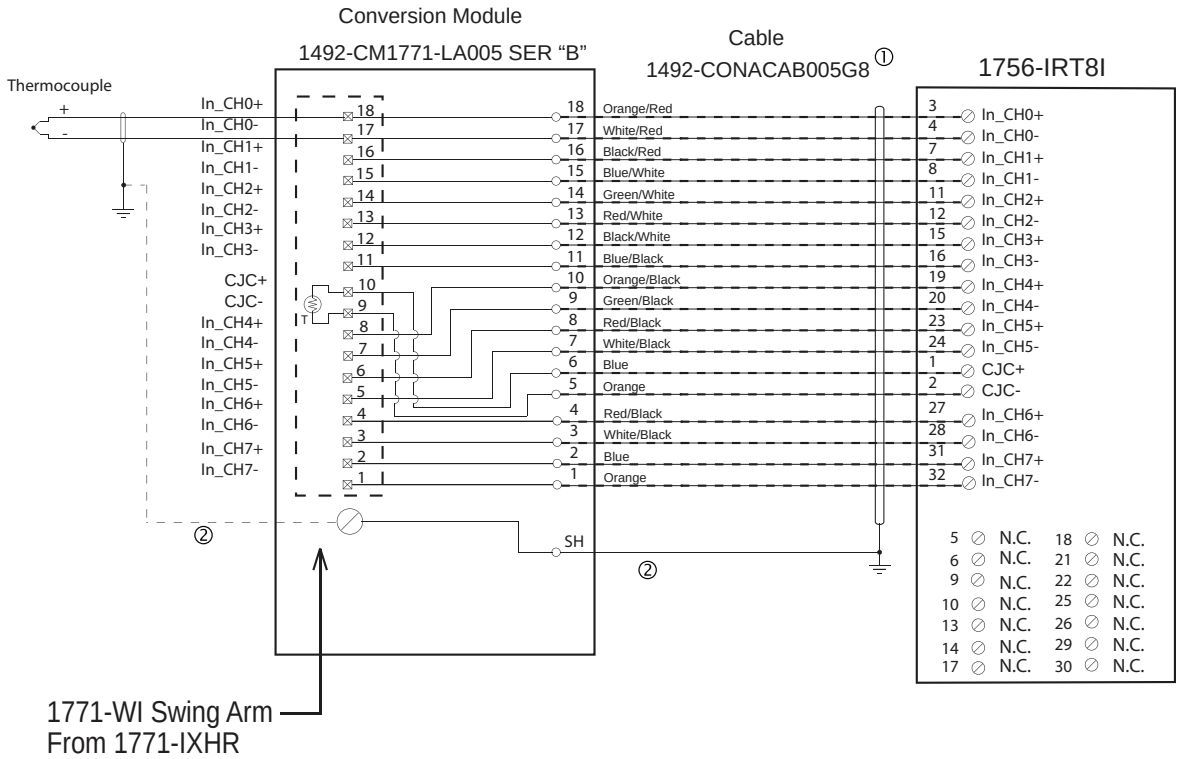

CONVERSION MODULE INSTALLATION AND APPLICATION CONSIDERATIONS

① This Bul. 1492 cable consists of a cable wired to one 1756-IRT8I RTB. Recommended cable lengths of 0.5M or 1.0M (005=0.5M, 010=1.0M).

② SHIELD GROUNDING: In some installations, the field wiring shield was grounded on the 1771 chassis. If this was the case, the installer must remove these shield connections from the 1771 chassis and they can be connected to the grounding stud on the 1492-CM1771-LA005 SER"B" module. The pre-wired cable used between the 1492-CM1771-LA005 SER"B" module and the 1756-IRT8I [1492-CONACAB005G8] provides a shield ground lug to ground the shield at the 1756 ControlLogix chassis, this must be connected. Do NOT connect this ground lug to the conversion module grounding stud.

③ The 1771-IXHR has built CJC (cold junction compensation) into the swing-arm. The conversion module [1492-CM1771-LA005 SER"B"] passes this CJC signal to the 1756-IRT8I. Ensure that the 1756-IRT8I is configured for external CJC.

④ The 1771-IXHR input configuration was software configured, as is the 1756-IRT8I. Please ensure the correct configuration in the 1756-IRT8I.

⑤ Refer to your 1771-IXHR and 1756-IRT8I Installation and User Manuals for additional information concerning comparisons of module wiring, features and configuration details.

1771-OFE1 to 1756-OF6VI

IMPORTANT	There are several key application considerations and system specifications (bottom of drawing) when using these components (conversion module, cable and output module). Read and understand these considerations before installation.

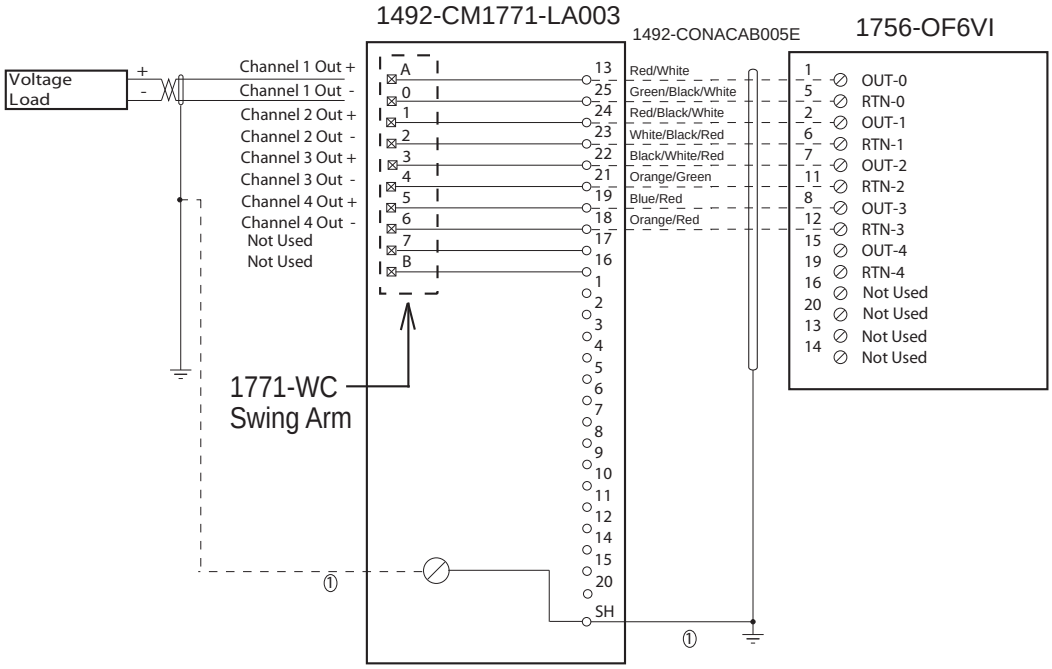

CONVERSION MODULE INSTALLATION AND APPLICATION CONSIDERATIONS

① SHIELD GROUNDING: In some installations, the field wiring shield was grounded on the 1771 chassis. If this was the case, the installer must remove these shield connections from the 1771 chassis and they can be connected to the grounding stud on the 1492-CM1771-LA003 module. The pre-wired cable used between the 1492-CM1771-LA003 module and the 1756-OF6VI [1492-CONACAB005E] provides a shield ground lug to ground the shield at the 1756 ControlLogix chassis, this must be connected. Do NOT connect this ground lug to the conversion module grounding stud.

② The 1771-OFE1 analog output range was configured by jumpers, the output range for the 1756-OF6VI is software configured. Please ensure the correct output range is configured in the 1756-OF6VI.

③ Refer to your 1771-OFE1 and 1756-OF6VI Installation and User Manuals for additional information concerning comparisons of module wiring, features and configuration details.

41170-949 (1)

1771-OFE1 to 1756-OF8I

IMPORTANT	There are several key application considerations and system specifications (bottom of drawing) when using these components (conversion module, cable and input module). Read and understand these considerations before installation.

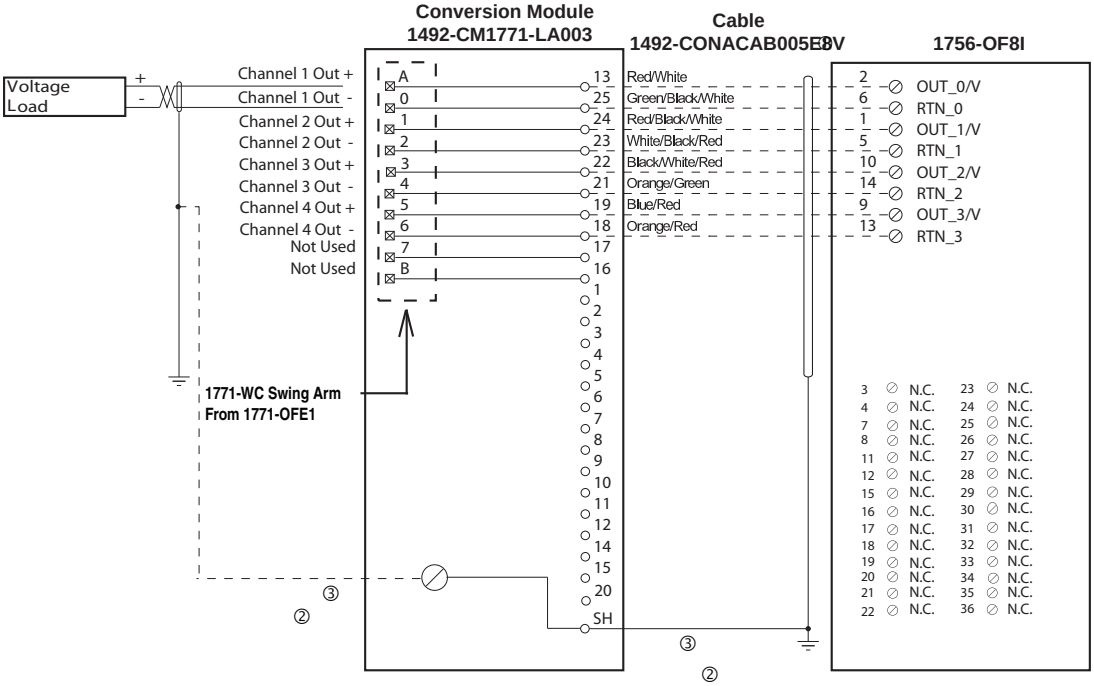

Conversion Module Installation and Application Considerations

① Cables are available in lengths of 0.5M or 1.0M (005=0.5M, 010=1.0M)

② SHIELD GROUNDING: In some installations, the field wiring shield was grounded on the 1771 chassis. If this was the case, the installer must remove these shield connections from the 1771 chassis and they can be connected to the grounding stud on the 1492-CM1771-LA003 module. The pre-wired cable used between the 1492-CM1771-LA003 module and the 1756-OF8I [1492-CONACAB005E8V] provides a shield ground lug to ground the shield at the 1756 ControlLogix chassis, this must be connected. Do NOT connect this ground lug to the conversion module grounding stud.

③ The 1771-OFE1 analog output range was configured by jumpers, the output range for the 1756-OF8I is software configured. Please ensure the correct output range is configured in the 1756-OF8I.

④ Refer to your 1771-OFE1 and 1756-OF8I Installation and User Manuals for additional information concerning comparisons of module wiring, features and configuration details.

1771-OFE1(2) to 1756-OF8I

IMPORTANT	There are several key application considerations and system specifications (bottom of drawing) when using these components (conversion module, cable and input module). Read and understand these considerations before installation.

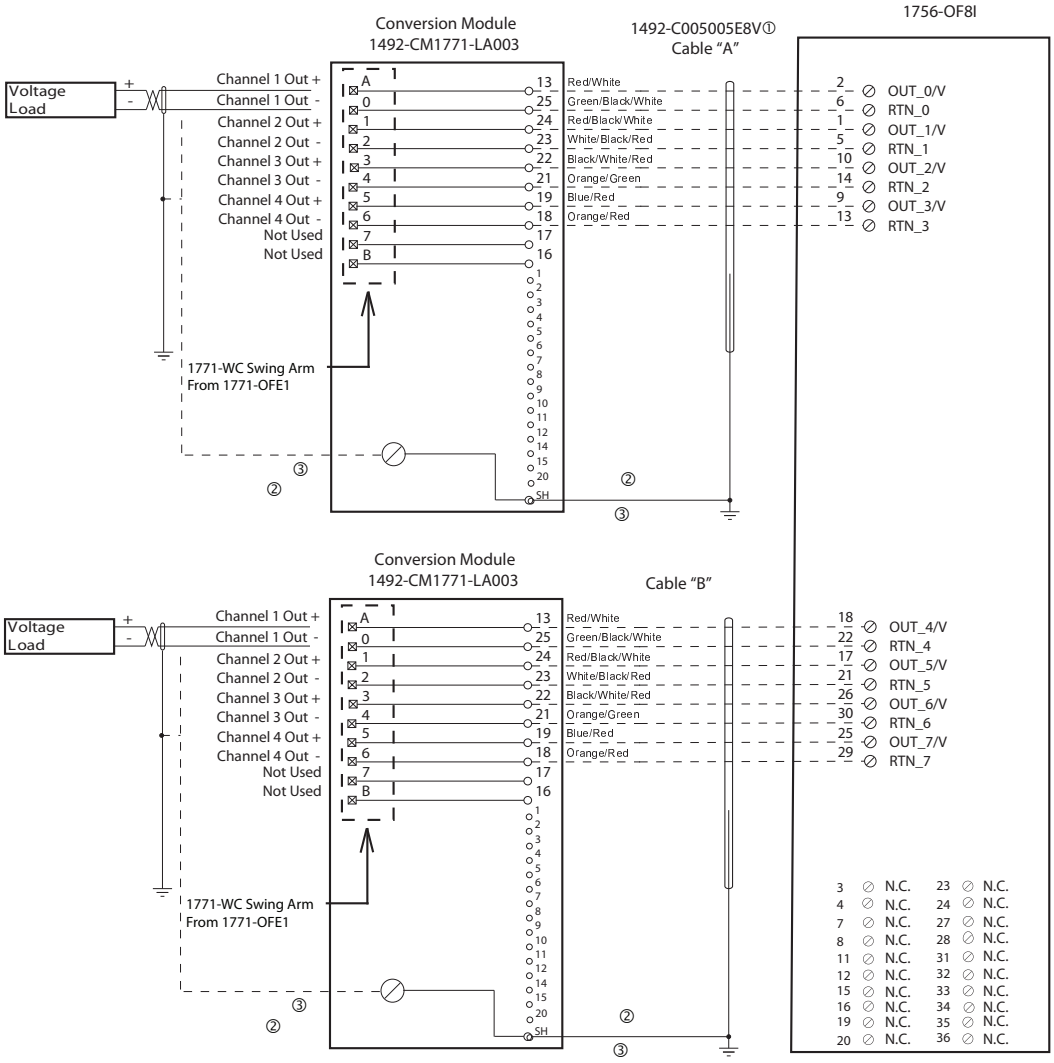

Conversion Module Installation and Application Considerations

① This Bul. 1492 cable consists of 2 separate cables (cable "A" and cable "B") wired to one 1756-OF8I. Each cable can be either 0.5M or 1.0M (005=0.5M, 010=1.0M). Ensure that cable A and cable B are connected to the correct module in the conversion.

② SHIELD GROUNDING: In some installations, the field wiring shield was grounded on the 1771 chassis. If this was the case, the installer must remove these shield connections from the 1771 chassis and they can be connected to the grounding stud on the 1492-CM1771-LA003 module. The pre-wired cable used between the 1492-CM1771-LA003 module and the 1756-OF8I [1492-C005005E8V] provides a shield ground lug to ground the shield at the 1756 ControlLogix chassis, this must be connected. Do NOT connect this ground lug to the conversion module grounding stud.

③ The 1771-OFE1 analog output range was configured by jumpers, the output range for the 1756-OF8I is software configured. Please ensure the correct output range is configured in the 1756-OF8I.

④ Refer to your 1771-OFE1 and 1756-OF8I Installation and User Manuals for additional information concerning comparisons of module wiring, features and configuration details.

DIR 10002306858 (Version 00)

1771-OFE2 to 1756-OF6CI

IMPORTANT	There are several key application considerations and system specifications (bottom of drawing) when using these components (conversion module, cable and output module). Read and understand these considerations before installation.

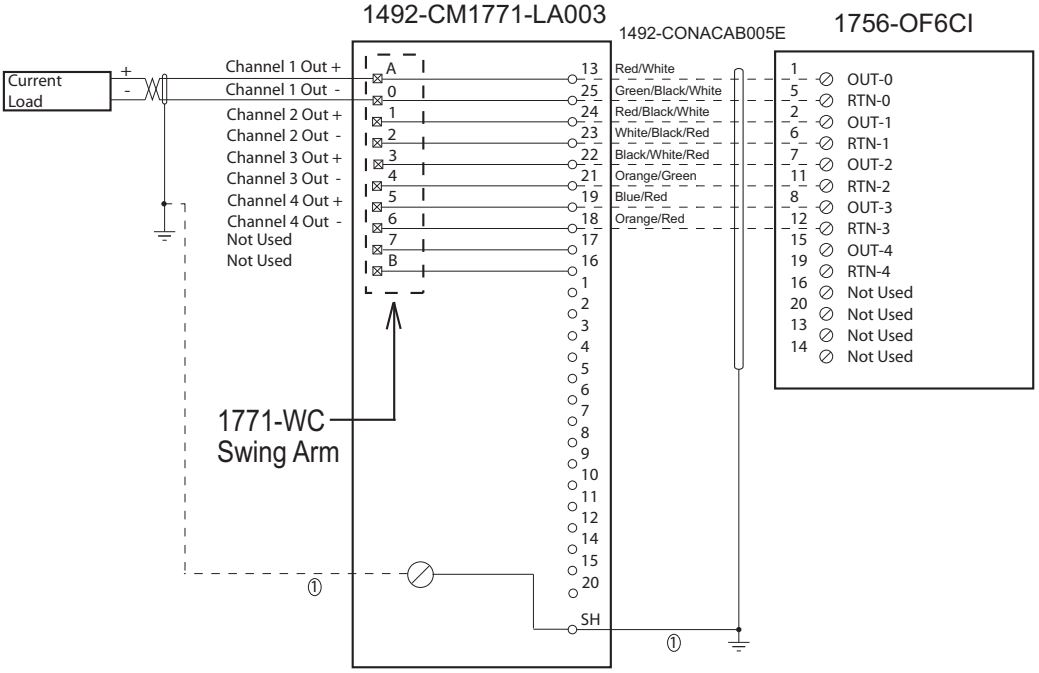

CONVERSION MODULE INSTALLATION AND APPLICATION CONSIDERATIONS

① SHIELD GROUNDING: In some installations, the field wiring shield was grounded on the 1771 chassis. If this was the case, the installer must remove these shield connections from the 1771 chassis and they can be connected to the grounding stud on the 1492-CM1771-LA003 module. The pre-wired cable used between the 1492-CM1771-LA003 module and the 1756-OF6CI [1492-CONACAB005E] provides a shield ground lug to ground the shield at the 1756 ControlLogix chassis, this must be connected. Do NOT connect this ground lug to the conversion module grounding stud.

② IMPORTANT: The 1771-OFE2 module required the use of an external power supply to drive the analog device. The 1756-OF6CI analog output provides the drive power to the analog device. ENSURE the external power supply is REMOVED from the current loop before applying power to the 1756-OF6CI module or the analog output module may be damaged.

③ The 1771-OFE2 analog output ranges were factory set, the output range for the 1756-OF6CI is software configured. Please ensure the correct output range is configured in the 1756-OF6CI.

④ The 1756-OF6CI module can drive a load up to 550 ohms with the standard pre-configured cable [1492-CONACAB005E]. If greater than a 550 ohm drive current is required, the pre-wired cable can be modified at the 1756-OF6CI terminal block to drive up to a 1000 ohms. Refer to the 1756-OF6CI Installation Manual for modification details.

⑤ Refer to your 1771-OFE2 and 1756-OF6CI Installation and User Manuals for additional information concerning comparisons of module wiring, features and configuration details.

41170-948 (1)

1771-OFE2 to 1756-OF8I

IMPORTANT	There are several key application considerations and system specifications (bottom of drawing) when using these components (conversion module, cable and input module). Read and understand these considerations before installation.

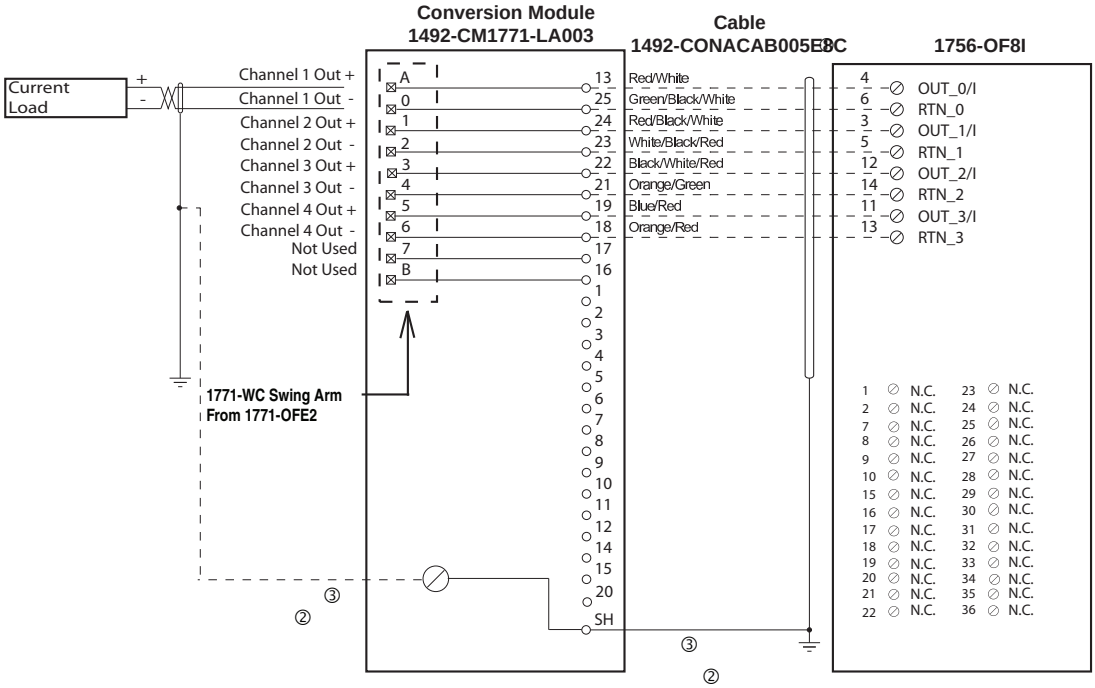

Conversion Module Installation and Application Considerations

① Cables are available in lengths of 0.5M or 1.0M (005=0.5M, 010=1.0M)

② SHIELD GROUNDING: In some installations, the field wiring shield was grounded on the 1771 chassis. If this was the case, the installer must remove these shield connections from the 1771 chassis and they can be connected to the grounding stud on the 1492-CM1771-LA003 module. The pre-wired cable used between the 1492-CM1771-LA003 module and the 1756-OF8I [1492-CONACAB005E8C] provides a shield ground lug to ground the shield at the 1756 ControlLogix chassis, this must be connected. Do NOT connect this ground lug to the conversion module grounding stud.

③ The 1771-OFE1 analog output range was configured by jumpers, the output range for the 1756-OF8I is software configured. Please ensure the correct output range is configured in the 1756-OF8I.

④ Refer to your 1771-OFE1 and 1756-OF8I Installation and User Manuals for additional information concerning comparisons of module wiring, features and configuration details.

DIR 10002306853 (Version 00)

1771-OFE2(2) to 1756-OF8I

IMPORTANT	There are several key application considerations and system specifications (bottom of drawing) when using these components (conversion module, cable and input module). Read and understand these considerations before installation.

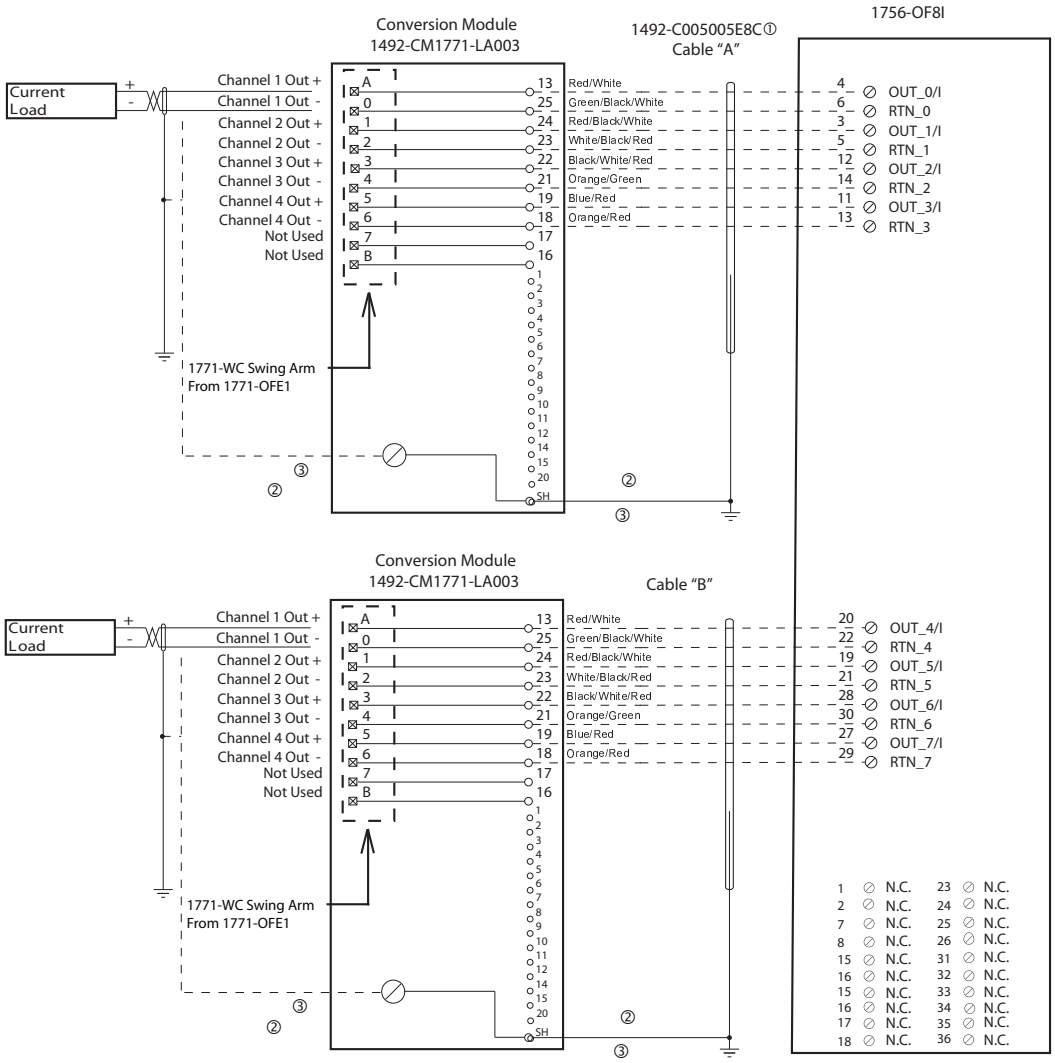

Conversion Module Installation and Application Considerations

① This Bul. 1492 cable consists of 2 separate cables (cable "A" and cable "B") wired to one 1756-OF8I. Each cable can be either 0.5M or 1.0M (005=0.5M, 010=1.0M). Ensure that cable A and cable B are connected to the correct module in the conversion.

② SHIELD GROUNDING: In some installations, the field wiring shield was grounded on the 1771 chassis. If this was the case, the installer must remove these shield connections from the 1771 chassis and they can be connected to the grounding stud on the 1492-CM1771-LA003 module. The pre-wired cable used between the 1492-CM1771-LA003 module and the 1756-OF8I [1492-C005005E8C] provides a shield ground lug to ground the shield at the 1756 ControlLogix chassis, this must be connected. Do NOT connect this ground lug to the conversion module grounding stud.

③ The 1771-OFE2 analog output range was configured by jumpers, the output range for the 1756-OF8I is software configured. Please ensure the correct output range is configured in the 1756-OF8I.

④ Refer to your 1771-OFE2 and 1756-OF8I Installation and User Manuals for additional information concerning comparisons of module wiring, features and configuration details.

DIR 10002306859 (Version 00)

Wiring Diagrams - High Resolution Isolated Analog

Standard High Resolution I/O

1771-NOC to 1756-OF8I

IMPORTANT	There are several key application considerations and system specifications (bottom of drawing) when using these components (conversion module, cable and input module). Read and understand these considerations before installation.

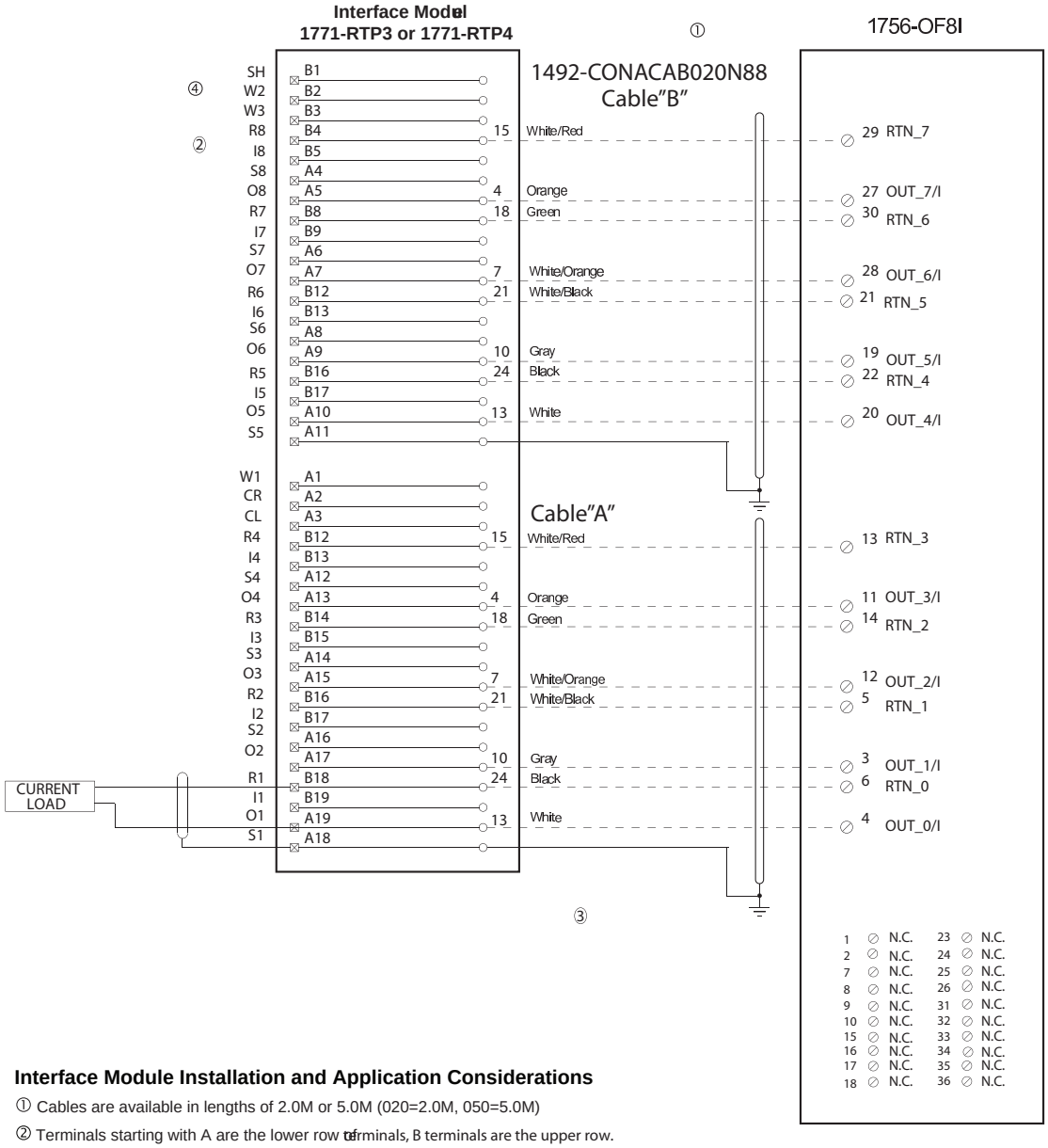

Interface Module Installation and Application Considerations

① Cables are available in lengths of 2.0M or 5.0M (020=2.0M, 050=5.0M)

② Terminals starting with A are the lower row of terminals, B terminals are the upper row.

③ Follow your PLC Analog User Manual for proper shield grounding instructions.

④ Terminals w1, w2, w3, are spares used for field wire convenience. NOTE: This is only true for module RTP3 and RTP4. cable does not connect to these terminals.

[Reference Doc: DIR 10002306650]

1771-NOC to 1756-OF8

IMPORTANT	There are several key application considerations and system specifications (bottom of drawing) when using these components (conversion module, cable and input module). Read and understand these considerations before installation.

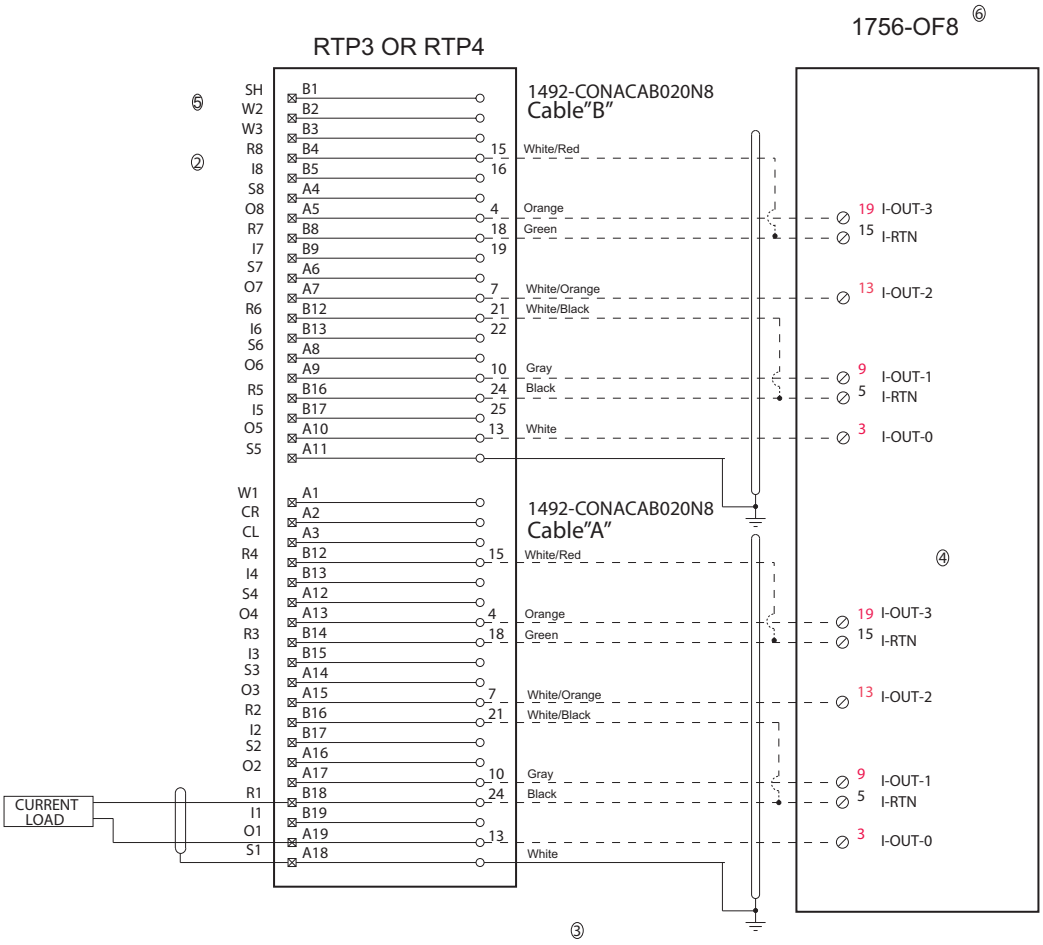

CONVERSION MODULE INSTALLATION AND APPLICATION CONSIDERATIONS

① Cables are available in 2.0m, or 5.0m

② Terminals starting with A are the lower row of terminals, B terminals are the upper row.

③ Follow your PLC Analog User Manual for proper shield grounding instructions.

④ RTN terminals are internally connected on the 1756-OF8.

⑤ Terminals w1, w2, w3, are spares used for field wire convenience. NOTE: this is only true for modules RTP3 and RTP4. The Bul. 1492 cable does not connect to these terminals.

⑥ The 1771 - NOC module provides channel to channel isolation, the 1756-OF8 does not. A conversion from 1771-NOC to an isolated 1756-OF8 is avalible.

41171-079 (00)

1771-NOC to 1756-OF6CI

IMPORTANT There are several key application considerations and system specifications (bottom of drawing) when using these components (conversion module, cable and input module). Read and understand these considerations before installation.

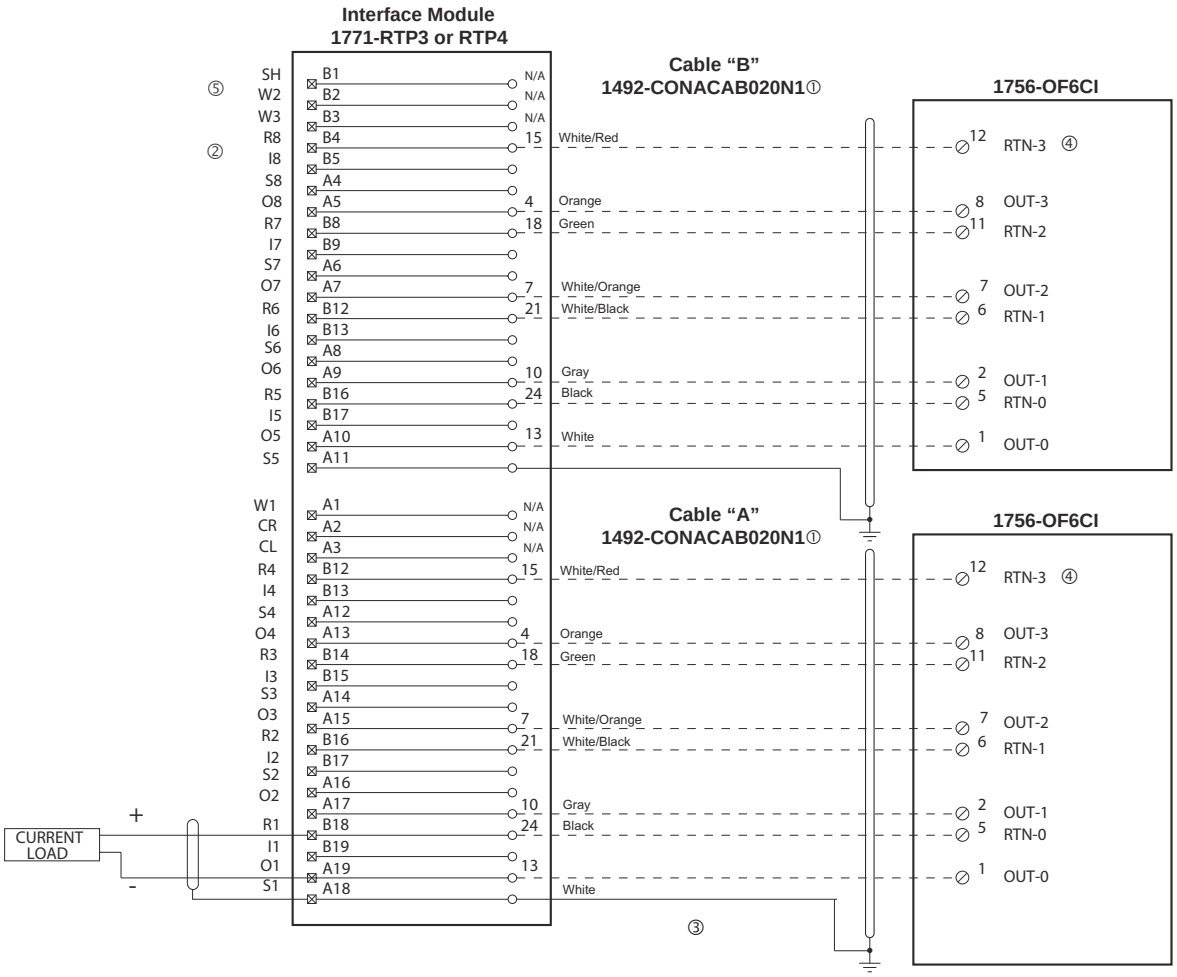

Conversion Module Installation and Application Considerations

① Cables are available in 2.0m, or 5.0m

② Terminals starting with A are the lower row of terminals, B terminals are the upper row.

③ Follow your PLC Analog User Manual for proper shield grounding instructions.

④ RTN terminals are internally connected on the 1756-OF6CI.

⑤ Terminals w1, w2, w3, are spares used for field wire convenience. NOTE: This is only true for modules RTP3 and RTP4. The Bul. 1492 cable does not connect to these terminals.

[Reference Doc: 41171-072 (Version 00)]

1771-NIS to 1756-IF8I

IMPORTANT	There are several key application considerations and system specifications (bottom of drawing) when using these components (conversion module, cable and input module). Read and understand these considerations before installation.

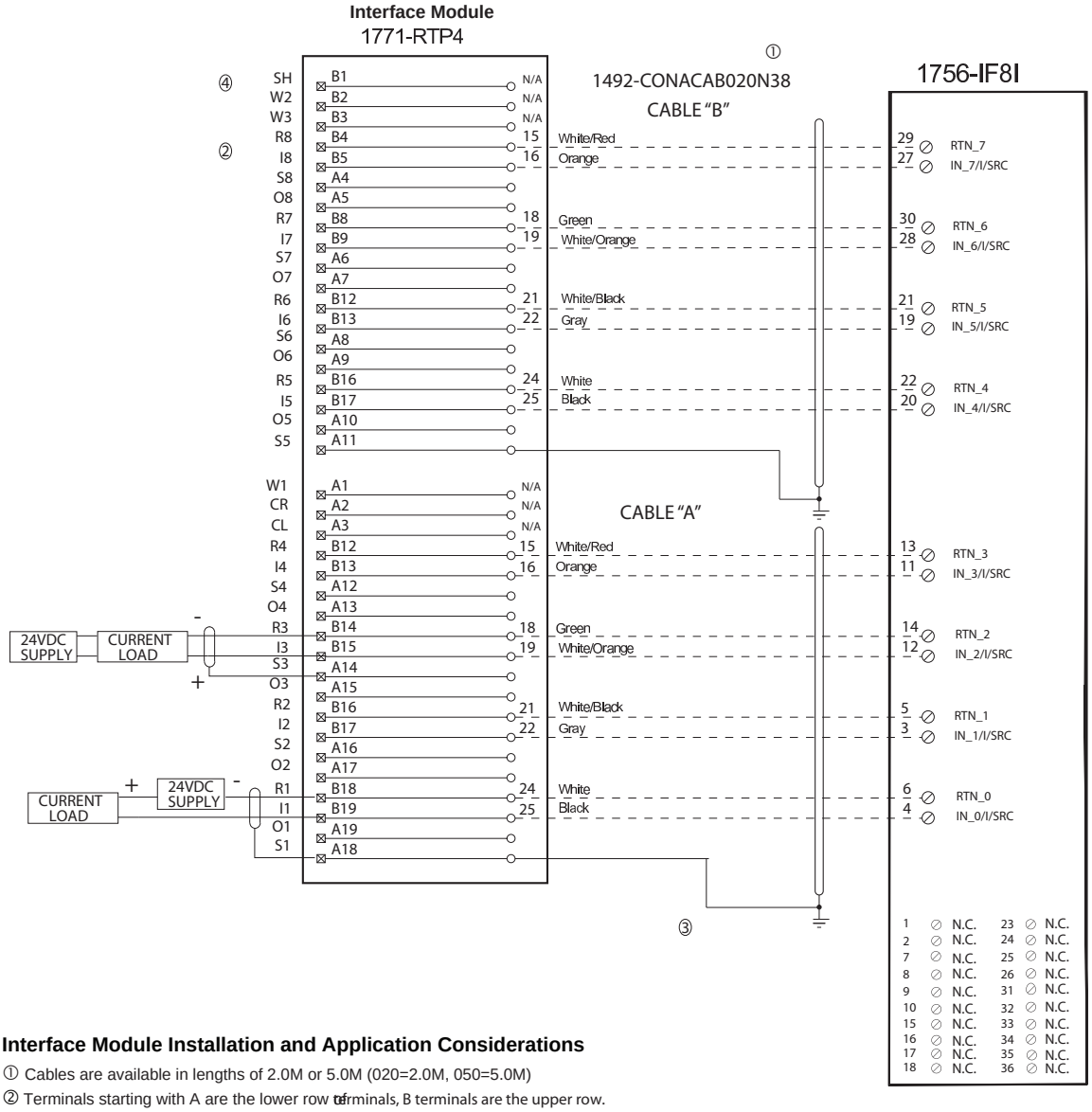

Interface Module Installation and Application Considerations

① Cables are available in lengths of 2.0M or 5.0M (020=2.0M, 050=5.0M)

② Terminals starting with A are the lower row of terminals, B terminals are the upper row.

③ Follow your PLC Analog User Manual for proper shield grounding instructions.

④ Terminals w1, w2, w3, are spares used for field wire convenience. NOTE: This is only true for module RTP4. The Bul. 1492 cable does not connect to these terminals.

DIR 10002306457 (Version 00)

1771-NIS to 1756-IF6CIS

IMPORTANT	There are several key application considerations and system specifications (bottom of drawing) when using these components (conversion module, cable and input module). Read and understand these considerations before installation.

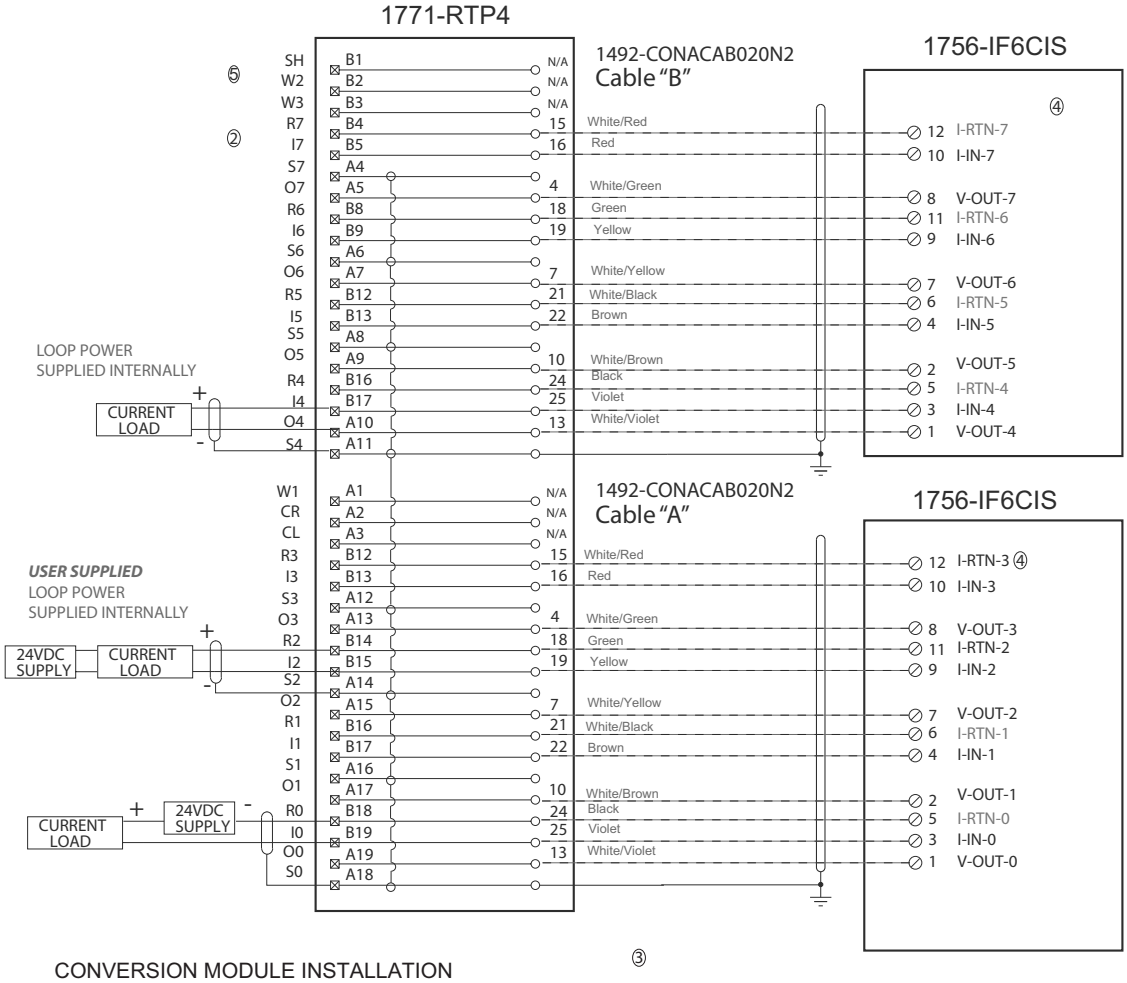

CONVERSION MODULE INSTALLATION AND APPLICATION CONSIDERATIONS

① Cables are available in 2.0m, or 5.0m

② Terminals starting with A are the lower row of terminals, B terminals are the upper row.

③ Follow your PLC Analog User Manual for proper shield grounding instructions.

④ RTN terminals are internally connected on the 1756-IF6CIS.

⑤ Terminals w1, w2, w3, are spares used for field wire convenience. NOTE: this is only true for modules RTP4. The Bul. 1492 cable does not connect to these terminals.

41171-073 (01)

1771-NIV to 1756-IF8I — Current

IMPORTANT	There are several key application considerations and system specifications (bottom of drawing) when using these components (conversion module, cable and input module). Read and understand these considerations before installation.

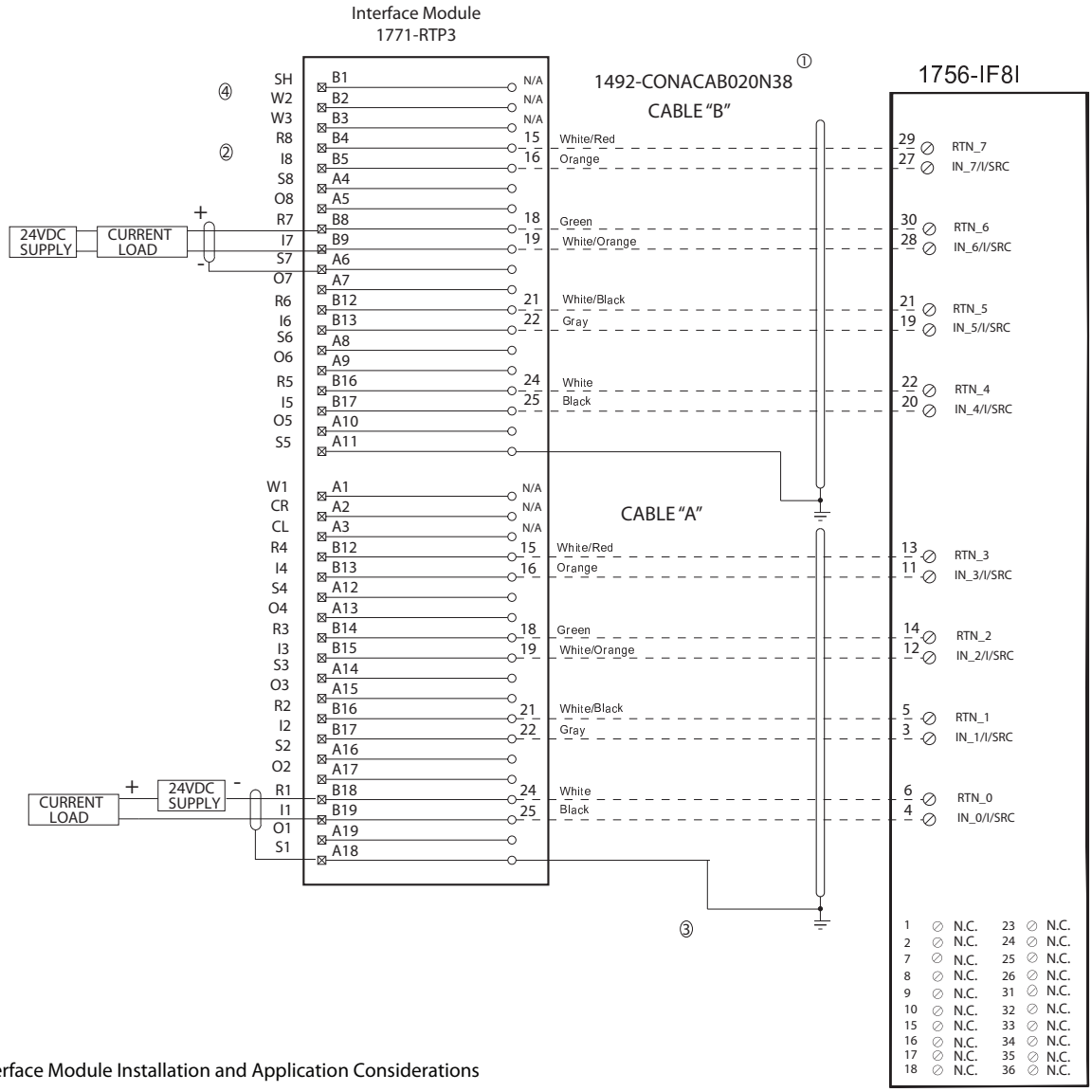

Interface Module Installation and Application Considerations

① Cables are available in lengths of 2.0M or 5.0M (020=2.0M, 050=5.0M)

② Terminals starting with A are the lower row of terminals, B terminals are the upper row.

③ Follow your PLC Analog User Manual for proper shield grounding instructions.

④ Terminals w1, w2, w3, are spares used for field wire convenience. NOTE: This is only true for module RTP3 and RTP4. The Bul. 1492 cable does not connect to these terminals.

DIR 10002306458 (Version 00)

1771-NIV to 1756-IF6I — Current

IMPORTANT	There are several key application considerations and system specifications (bottom of drawing) when using these components (conversion module, cable and input module). Read and understand these considerations before installation.

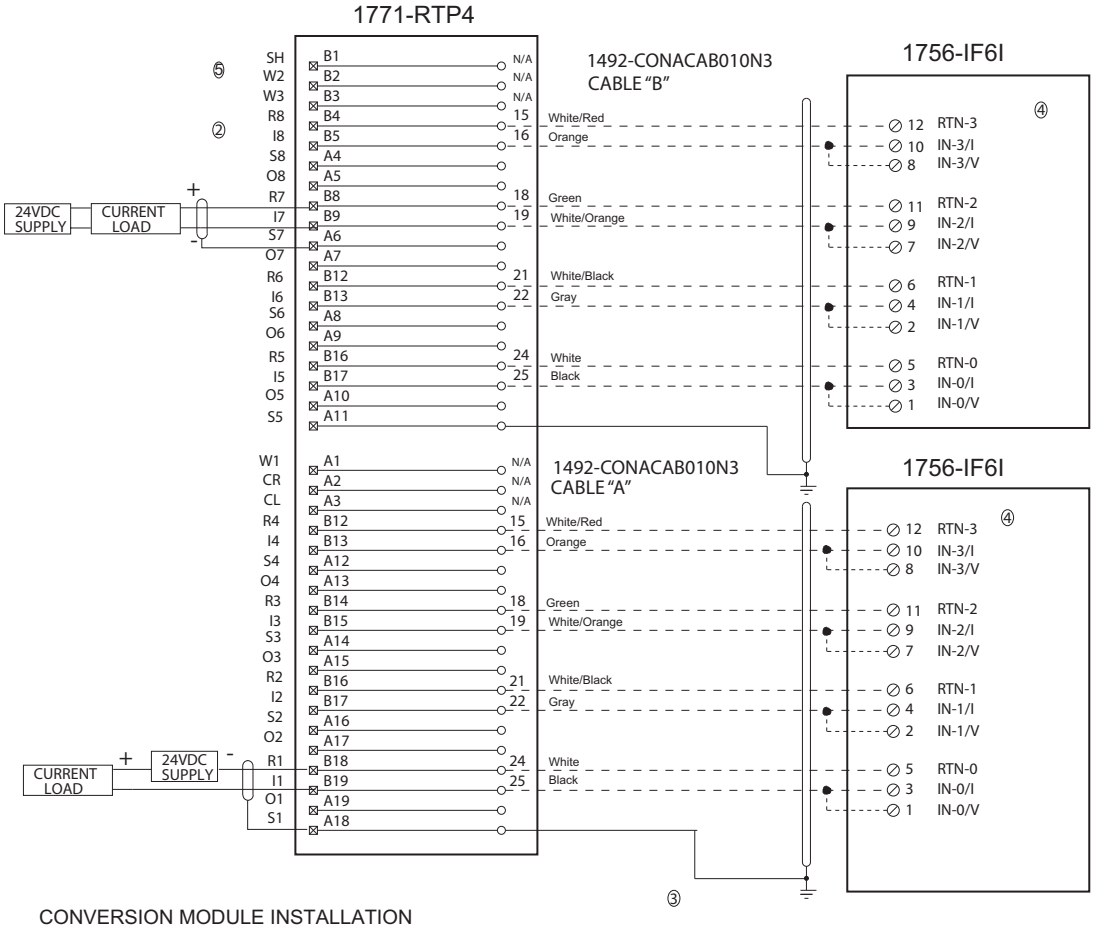

CONVERSION MODULE INSTALLATION
AND APPLICATION CONSIDERATIONS

① Cables are available in 2.0m, or 5.0m
② Terminals starting with A are the lower row of terminals, B terminals are the upper row.
③ Follow your PLC Analog User Manual for proper shield grounding instructions.
④ RTN terminals are internally connected on the 1756-IF6I.
⑤ Terminals w1, w2, w3, are spares used for field wire convenience. NOTE: this is only true for modules RTP3. The Bul. 1492 cable does not connect to these terminals.

41171-074 (00)

1771-NIV to 1756-IF8I — Voltage

IMPORTANT	There are several key application considerations and system specifications (bottom of drawing) when using these components (conversion module, cable and input module). Read and understand these considerations before installation.

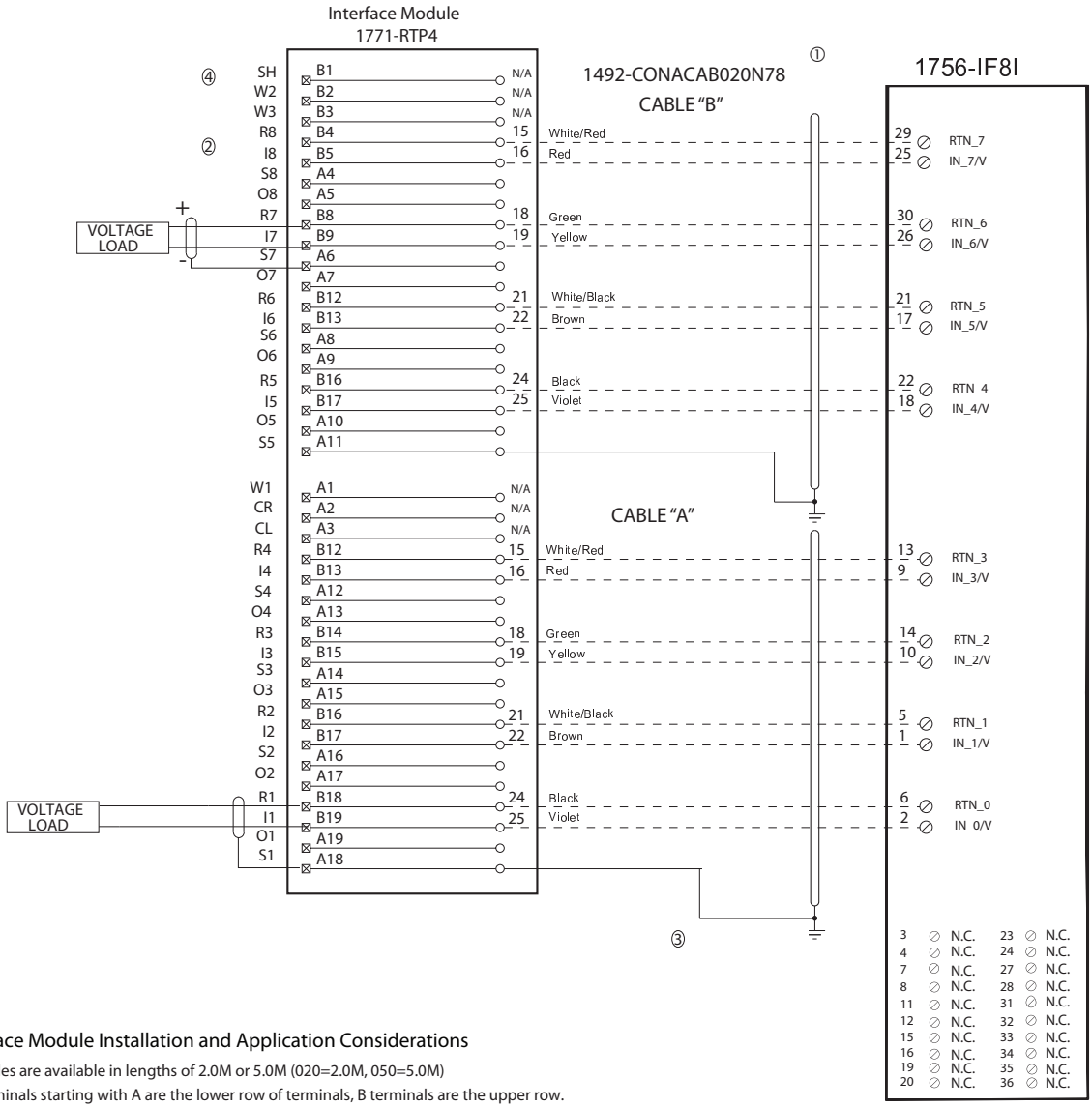

Interface Module Installation and Application Considerations

① Cables are available in lengths of 2.0M or 5.0M (020=2.0M, 050=5.0M)

② Terminals starting with A are the lower row of terminals, B terminals are the upper row.

③ Follow your PLC Analog User Manual for proper shield grounding instructions.

④ Terminals w1, w2, w3, are spares used for field wire convenience. NOTE: This is only true for module RTP4. The Bul. 1492 cable does not connect to these terminals.

DIR 10002306478 (Version 00)

1771-NIV to 1756-IF6I — Voltage

IMPORTANT	There are several key application considerations and system specifications (bottom of drawing) when using these components (conversion module, cable and input module). Read and understand these considerations before installation.

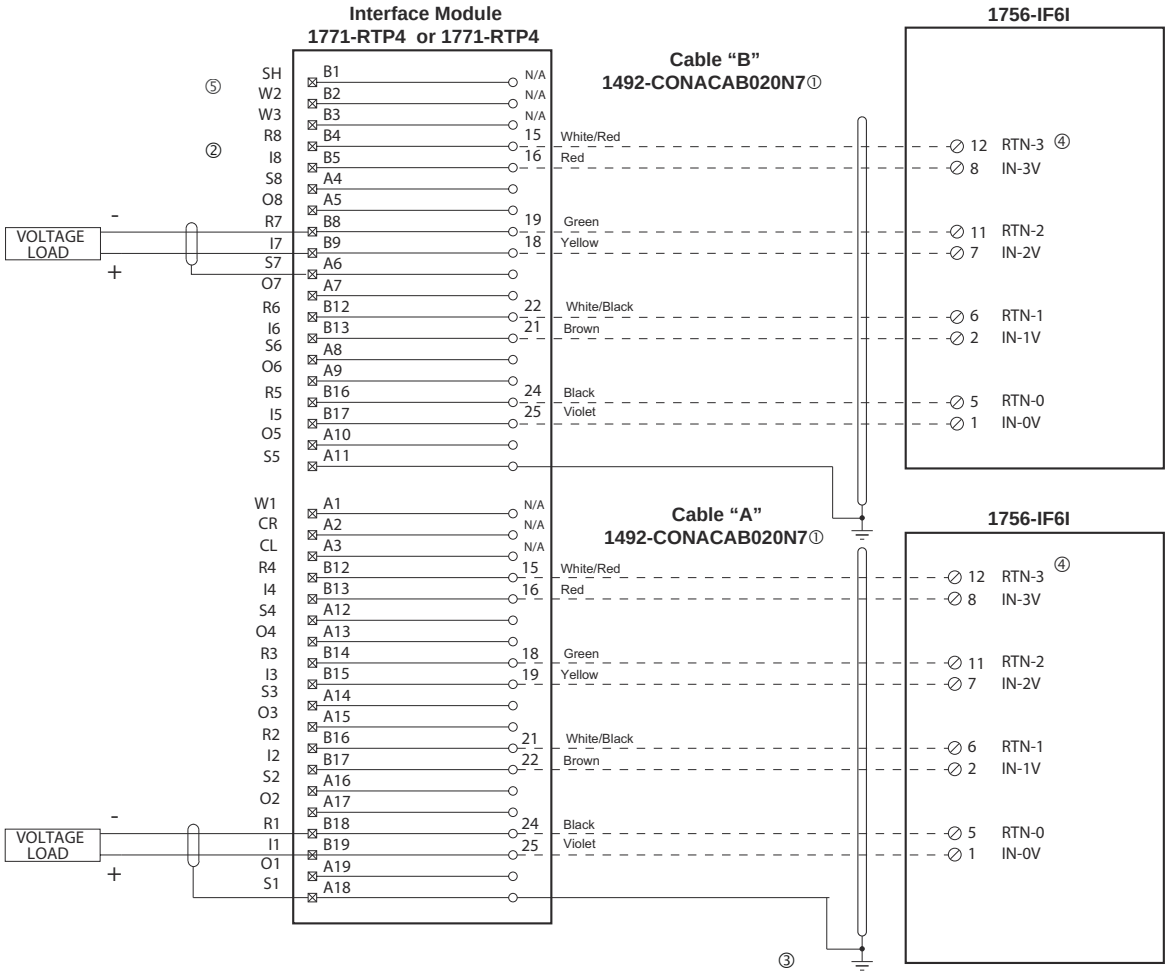

Conversion Module Installation and Application Considerations

① Cables are available in 2.0m, or 5.0m

② Terminals starting with A are the lower row of terminals, B terminals are the upper row.

③ Follow your PLC Analog User Manual for proper shield grounding instructions.

④ RTN terminals are internally connected on the 1756-IF6I.

⑤ Terminals w1, w2, w3, are spares used for field wire convenience. NOTE: This is only true for module RTP4. The Bul. 1492 cable does not connect to these terminals.

41171-080 Ver (00)

1771-NIV to 1756-IF6I — Current and Voltage

IMPORTANT	There are several key application considerations and system specifications (bottom of drawing) when using these components (conversion module, cable and input module). Read and understand these considerations before installation.

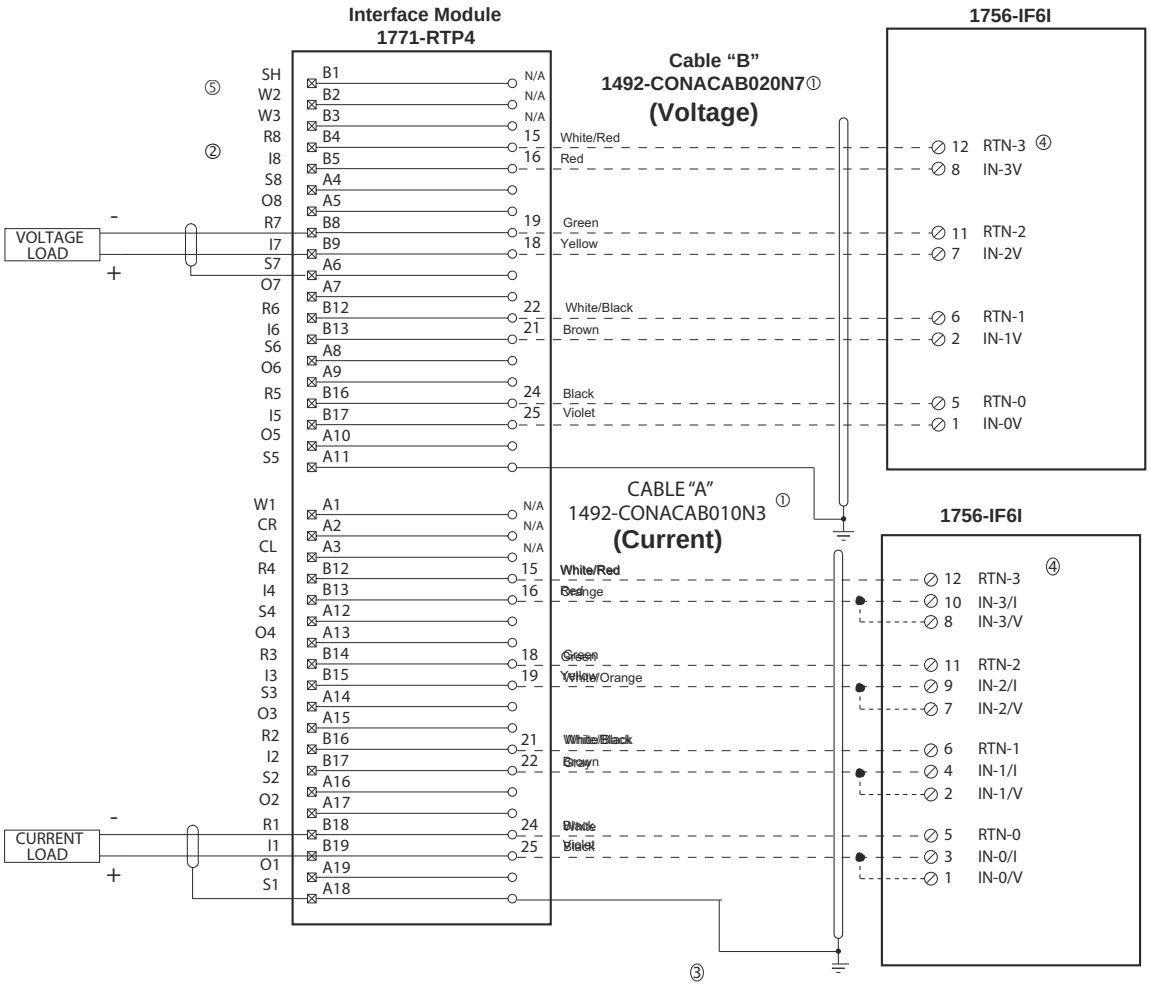

Conversion Module Installation and Application Considerations

① Cables are available in 2.0m, or 5.0m

② Terminals starting with A are the lower row of terminals, B terminals are the upper row.

③ Follow your PLC Analog User Manual for proper shield grounding instructions.

④ RTN terminals are internally connected on the 1756-IF6I.

⑤ Terminals w1, w2, w3, are spares used for field wire convenience. NOTE: This is only true for module RTP4. The Bul. 1492 cable does not connect to these terminals.

41171-039 Ver (00)

1771-NIV to 1756-IF6I — Voltage and Current

IMPORTANT	There are several key application considerations and system specifications (bottom of drawing) when using these components (conversion module, cable and input module). Read and understand these considerations before installation.

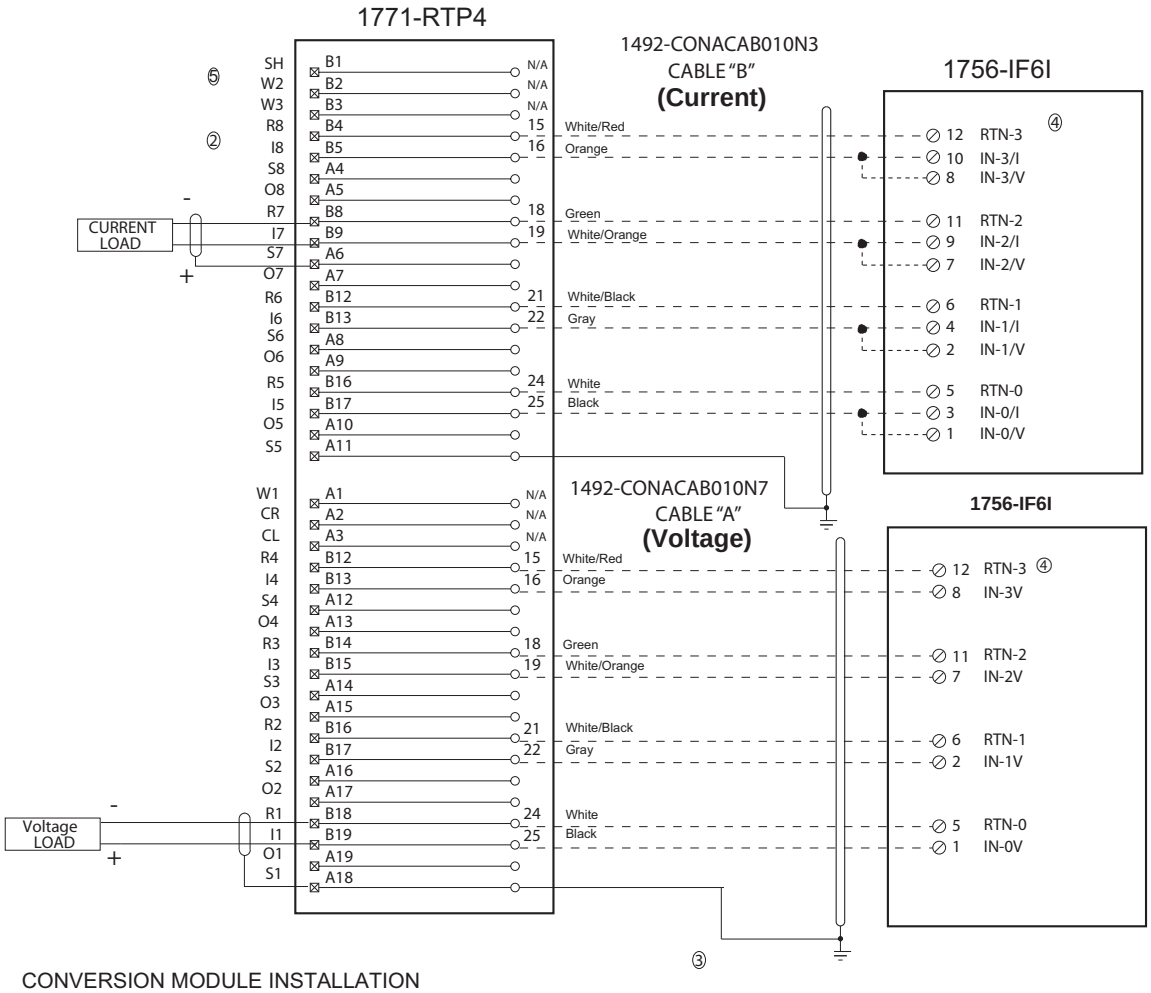

CONVERSION MODULE INSTALLATION
AND APPLICATION CONSIDERATIONS

① Cables are available in 2.0m, or 5.0m
② Terminals starting with A are the lower row of terminals, B terminals are the upper row.
③ Follow your PLC Analog User Manual for proper shield grounding instructions.
④ RTN terminals are internally connected on the 1756-IF6I.
⑤ Terminals w1, w2, w3, are spares used for field wire convenience. NOTE: this is only true for modules RTP3. The Bul. 1492 cable does not connect to these terminals.

41171-038 (00)

1771-NR to 1756-IRT8I

IMPORTANT	There are several key application considerations and system specifications (bottom of drawing) when using these components (conversion module, cable and input module). Read and understand these considerations before installation.

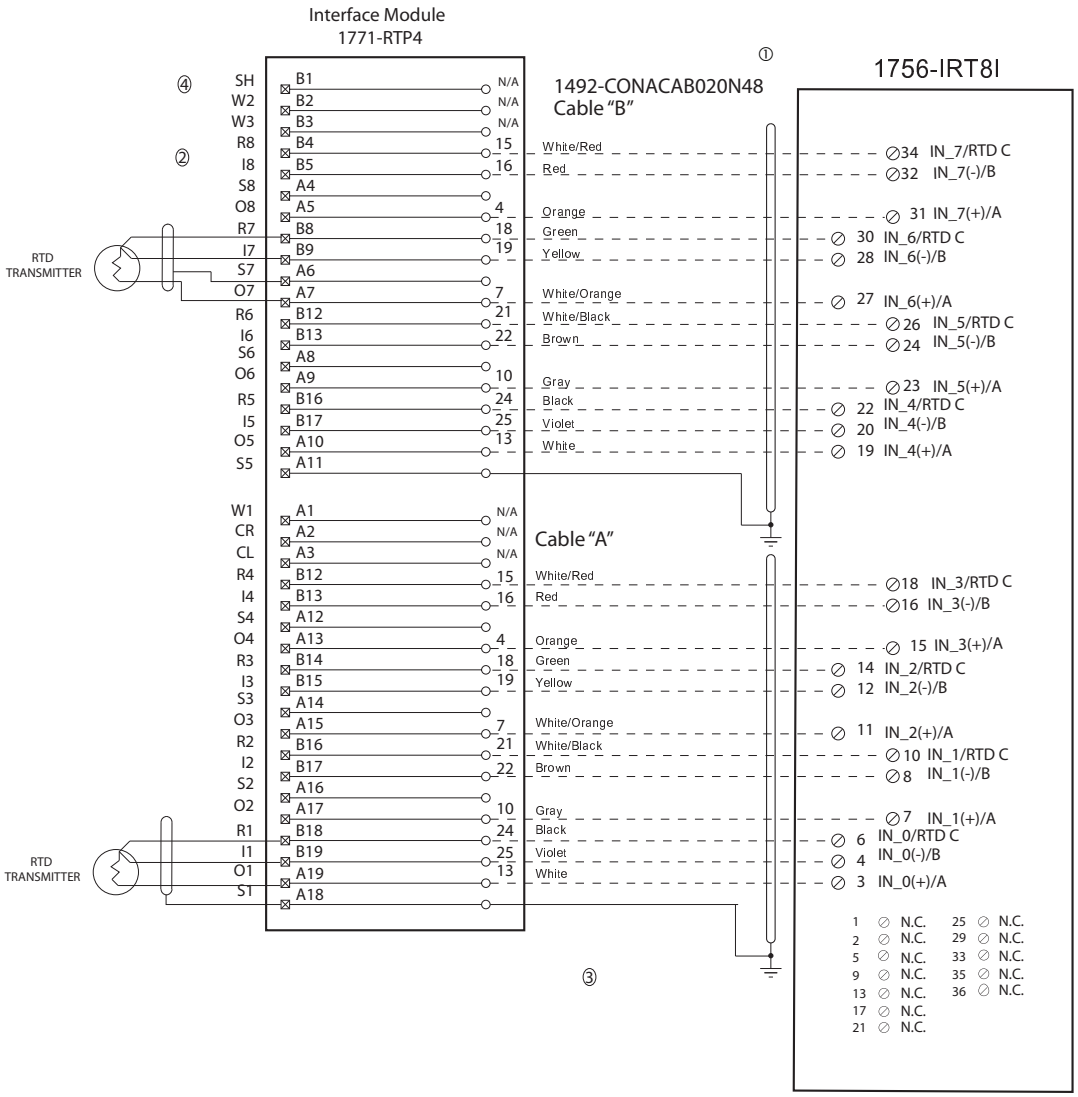

Interface Module Installation and Application Considerations

① Cables are available in lengths of 2.0M or 5.0M (020=2.0M, 050=5.0M)

② Terminals starting with A are the lower row of terminals, B terminals are the upper row.

③ Follow your PLC Analog User Manual for proper shield grounding instructions.

④ Terminals w1, w2, w3, are spares used for field wire convenience. NOTE: This is only true for module RTP3 and RTP4. The Bul. 1492 cable does not connect to these terminals.

DIR 10002306848 (Version 00)

1771-NR to 1756-IR6I

IMPORTANT	There are several key application considerations and system specifications (bottom using these components (conversion module, cable and input module). Read and considerations before installation.

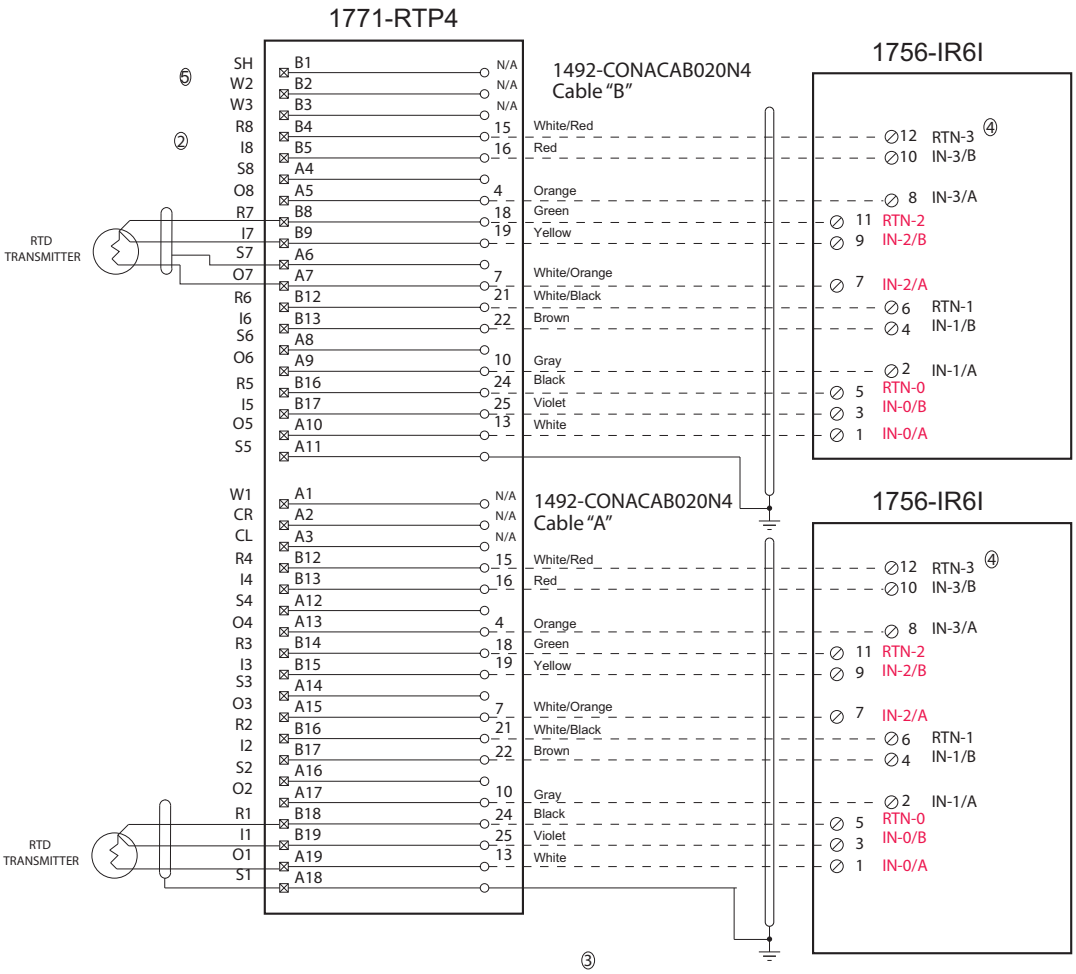

CONVERSION MODULE INSTALLATION AND APPLICATION CONSIDERATIONS

① Cables are available in 2.0m, or 5.0m

② Terminals starting with A are the lower row of terminals, B terminals are the upper row.

③ Follow your PLC Analog User Manual for proper shield grounding instructions.

④ RTN terminals are internally connected on the 1756-IR6I.

⑤ Terminals w1, w2, w3, are spares used for field wire convenience. NOTE: this is only true for modules RTP4. The Bul. 1492 cable does not connect to these terminals.

41171-075 (00)

1771-NT1 or -NT2 to 1756-IRT8I

IMPORTANT	There are several key application considerations and system specifications (bottom of drawing) when using these components (conversion module, cable and input module). Read and understand these considerations before installation.

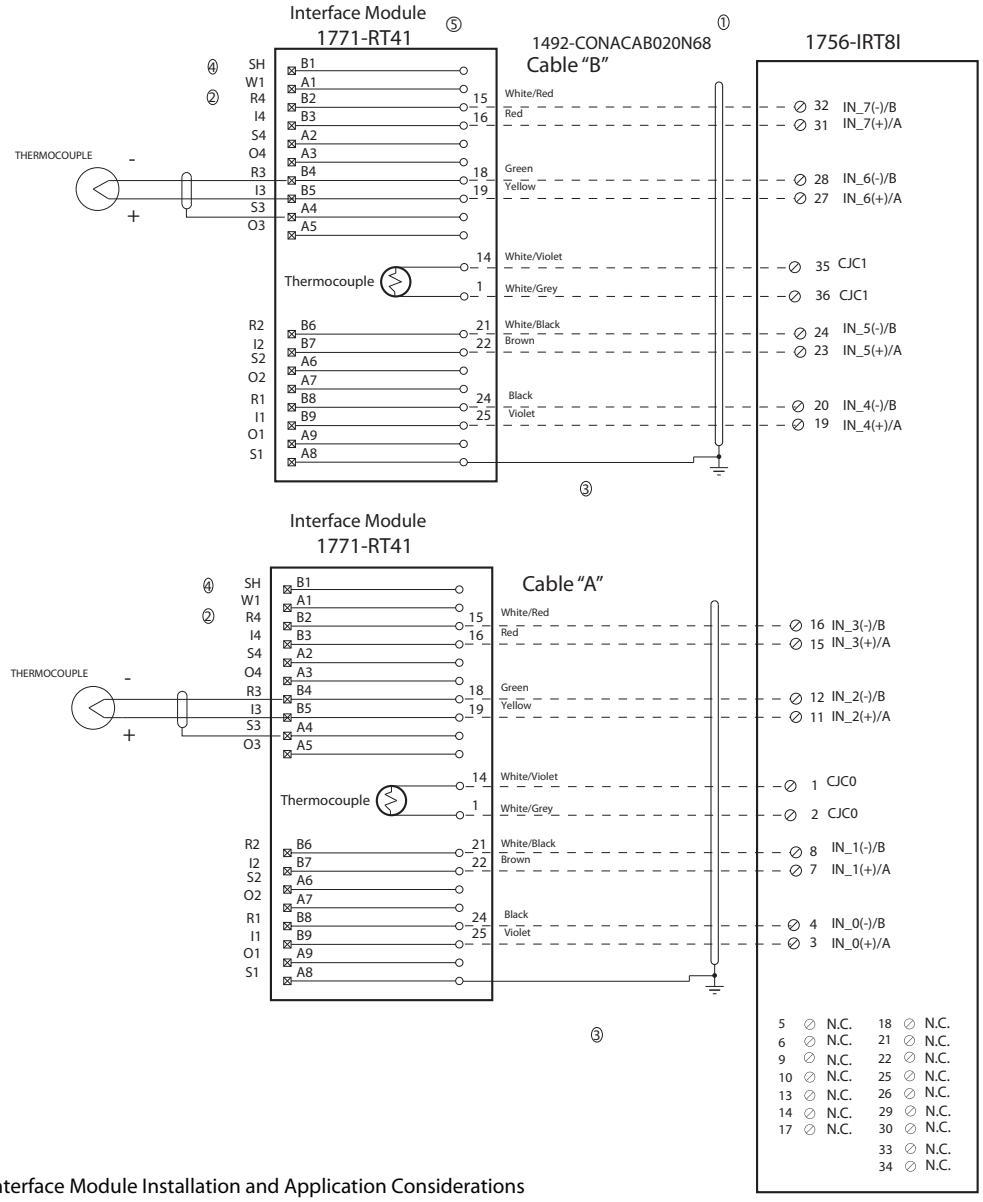

Interface Module Installation and Application Considerations

① Cables are available in lengths of 2.0M or 5.0M (020=2.0M, 050=5.0M)

② Terminals starting with A are the lower row of terminals, B terminals are the upper row.

③ Follow your PLC Analog User Manual for proper shield grounding instructions.

④ Terminals w1, w2, w3, are spares used for field wire convenience. NOTE: This is only true for module RTP3 and RTP4. The Bul. 1492 cable does not connect to these terminals.

⑤ This conversion solution requires replacement of the exisiting (1) 1771-RTP1 interface module with (2) 1771-RT41 interface modules. Each 1771-RTP1 and RT41 module has there own cold junction compensation thermocouple attached to the interface module.

DIR 10002306849 (Version 00)

1771-NT1 to 1756-IT6I

IMPORTANT	There are several key application considerations and system specifications (bottom using these components (conversion module, cable and input module). Read and considerations before installation.

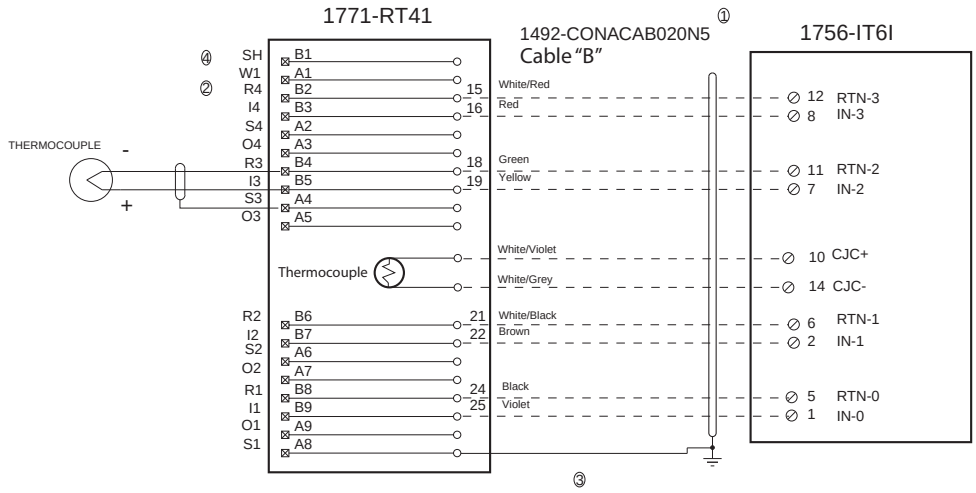

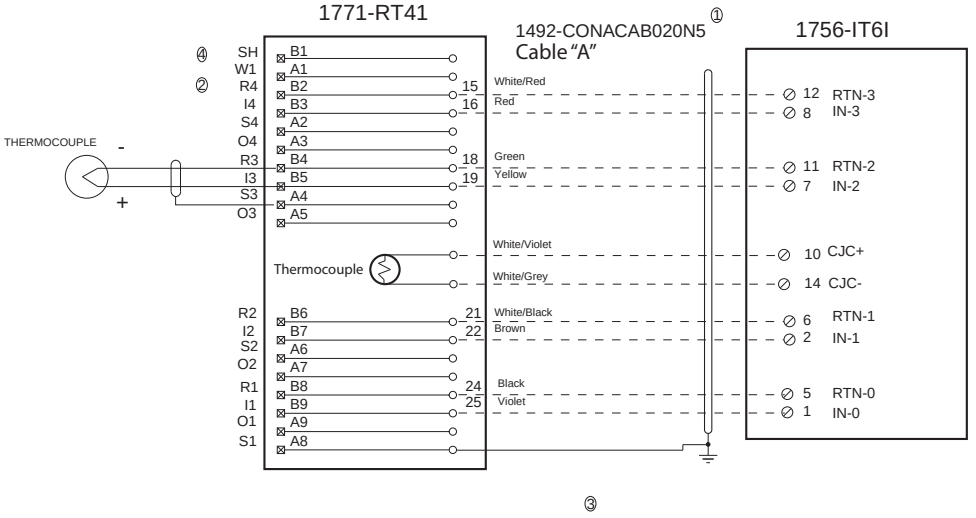

CONVERSION MODULE INSTALLATION AND APPLICATION CONSIDERATIONS

① Cables are available in 2.0M or 5.0M.
② Terminals starting with A are the lower row of terminals, B terminals are the upper row.
③ Follow your PLC Analog User Manual for proper shield grounding instructions.
④ Terminals W1, W2 and W3 are spares used for field wire convenience. NOTE. This is only true for modules RT41 . The Bul. 1492 cable does not connect to these terminals.

41171-076 (01)

1771-NOV to 1756-OF8I

IMPORTANT	There are several key application considerations and system specifications (bottom of drawing) when using these components (conversion module, cable and input module). Read and understand these considerations before installation.

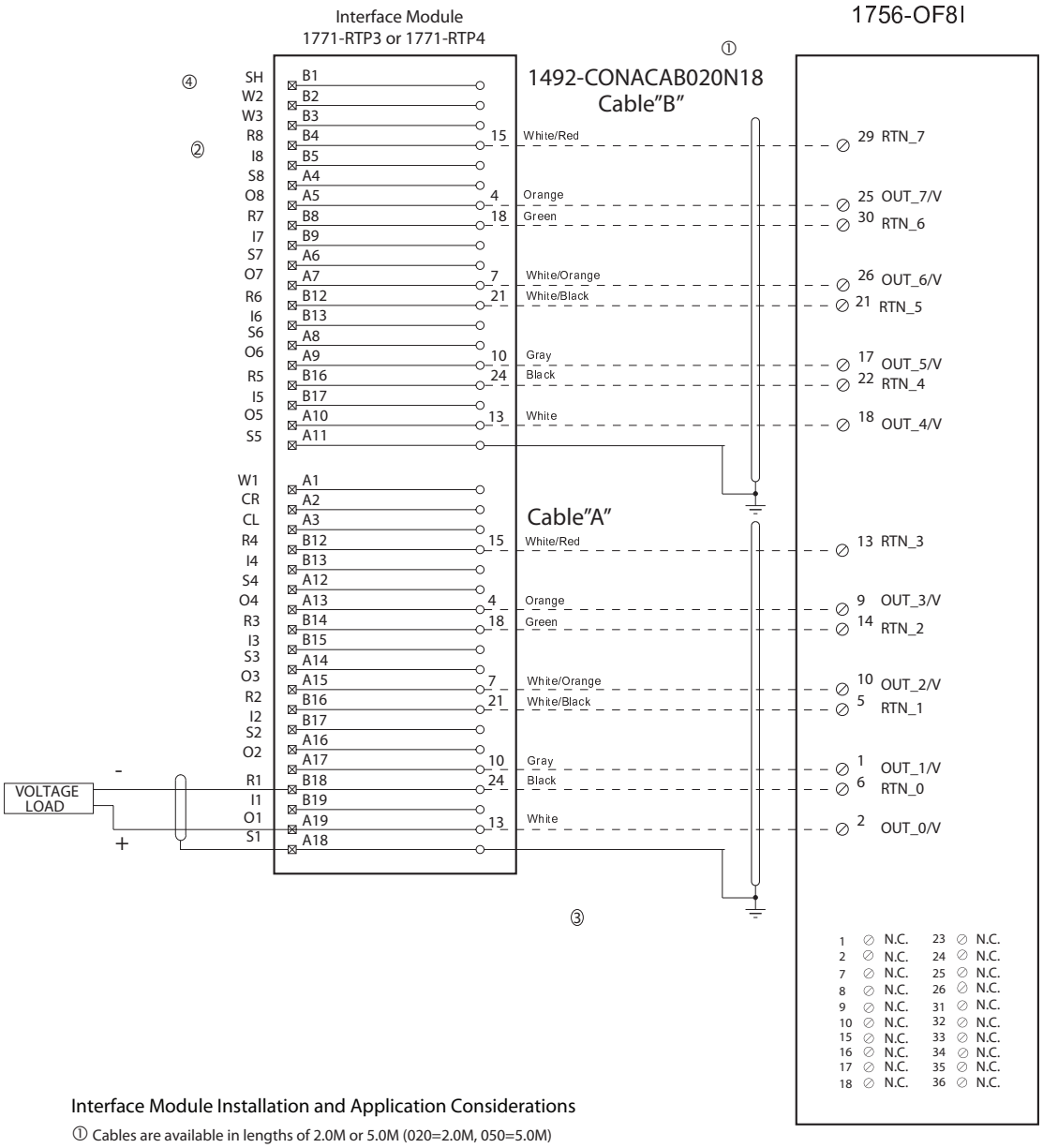

Interface Module Installation and Application Considerations

① Cables are available in lengths of 2.0M or 5.0M (020=2.0M, 050=5.0M)

② Terminals starting with A are the lower row of terminals, B terminals are the upper row.

③ Follow your PLC Analog User Manual for proper shield grounding instructions.

④ Terminals w1, w2, w3, are spares used for field wire convenience. NOTE: This is only true for module RTP3 and RTP4. The Bul. 1492 cable does not connect to these terminals.

DIR 10002306686 (Version 00)

1771-NOV to 1756-OF6VI

IMPORTANT	There are several key application considerations and system specifications (bottom of drawing) when using these components (conversion module, cable and input module). Read and understand these considerations before installation.

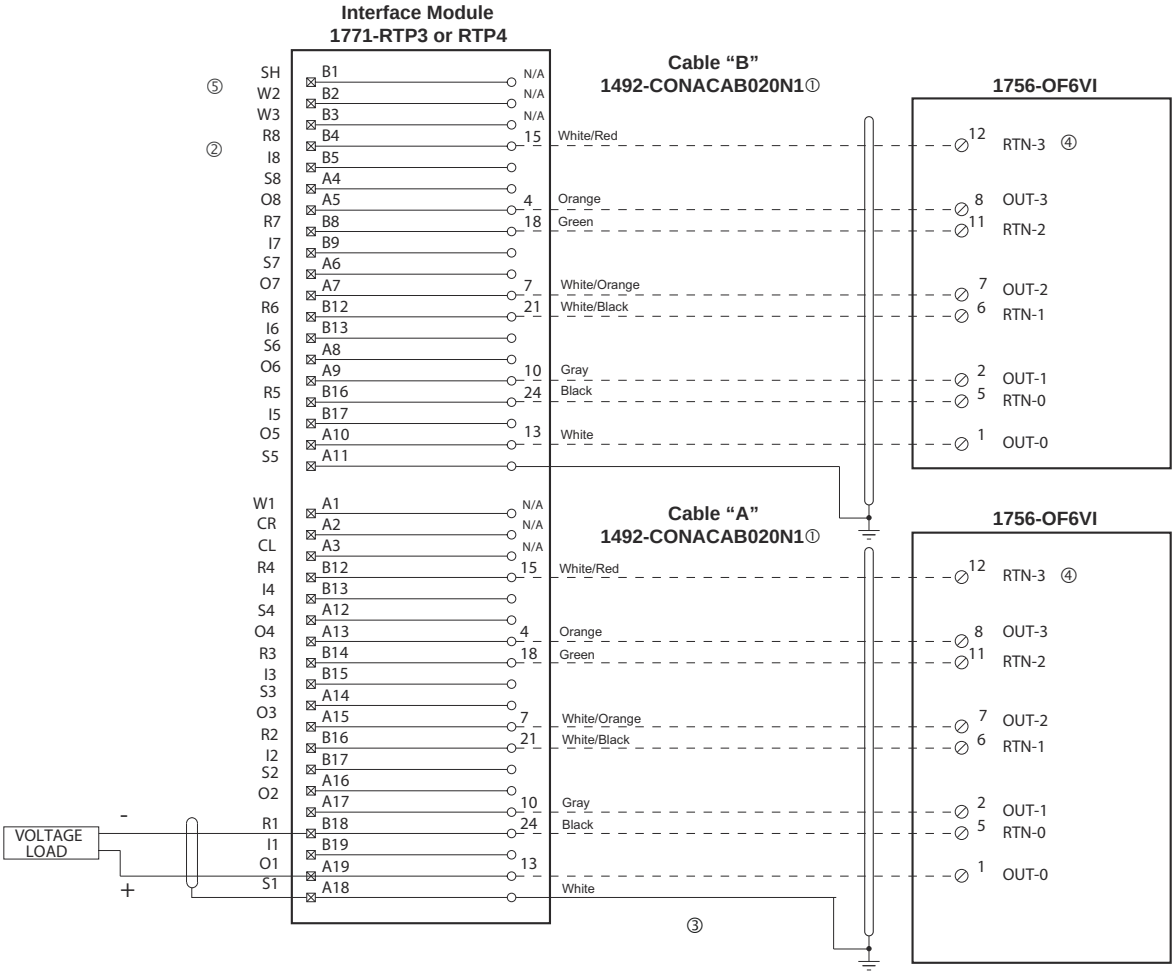

Conversion Module Installation and Application Considerations

① Cables are available in 2.0m, or 5.0m

② Terminals starting with A are the lower row of terminals, B terminals are the upper row.

③ Follow your PLC Analog User Manual for proper shield grounding instructions.

④ RTN terminals are internally connected on the 1756-OF6VI.

⑤ Terminals w1, w2, w3, are spares used for field wire convenience. NOTE: This is only true for modules RTP3 and RTP4. The Bul. 1492 cable does not connect to these terminals.

41171-081 Ver(00)

1771-NIV1 to 1756-IF8I

IMPORTANT	There are several key application considerations and system specifications (bottom of drawing) when using these components (conversion module, cable and input module). Read and understand these considerations before installation.

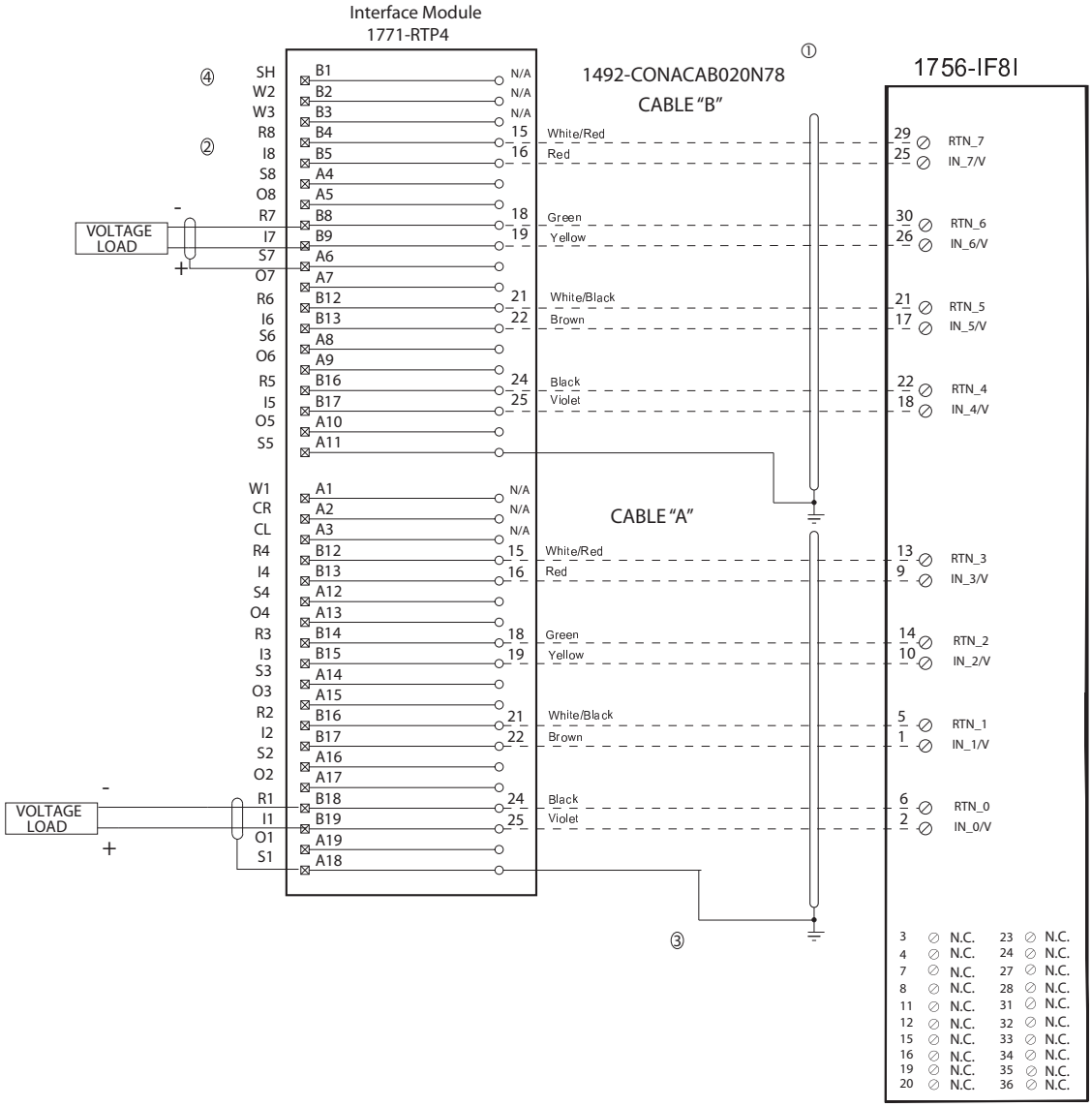

Interface Module Installation and Application Considerations

① Cables are available in lengths of 2.0M or 5.0M (020=2.0M, 050=5.0M)

② Terminals starting with A are the lower row of terminals, B terminals are the upper row.

③ Follow your PLC Analog User Manual for proper shield grounding instructions.

④ Terminals w1, w2, w3, are spares used for field wire convenience. NOTE: This is only true for module RTP3 and RTP4. The Bul. 1492 cable does not connect to these terminals.

DIR 10002306486 (Version 00)

1771-NIV1 to 1756-IF6I

IMPORTANT	There are several key application considerations and system specifications (bottom of drawing) when using these components (conversion module, cable and input module). Read and understand these considerations before installation.

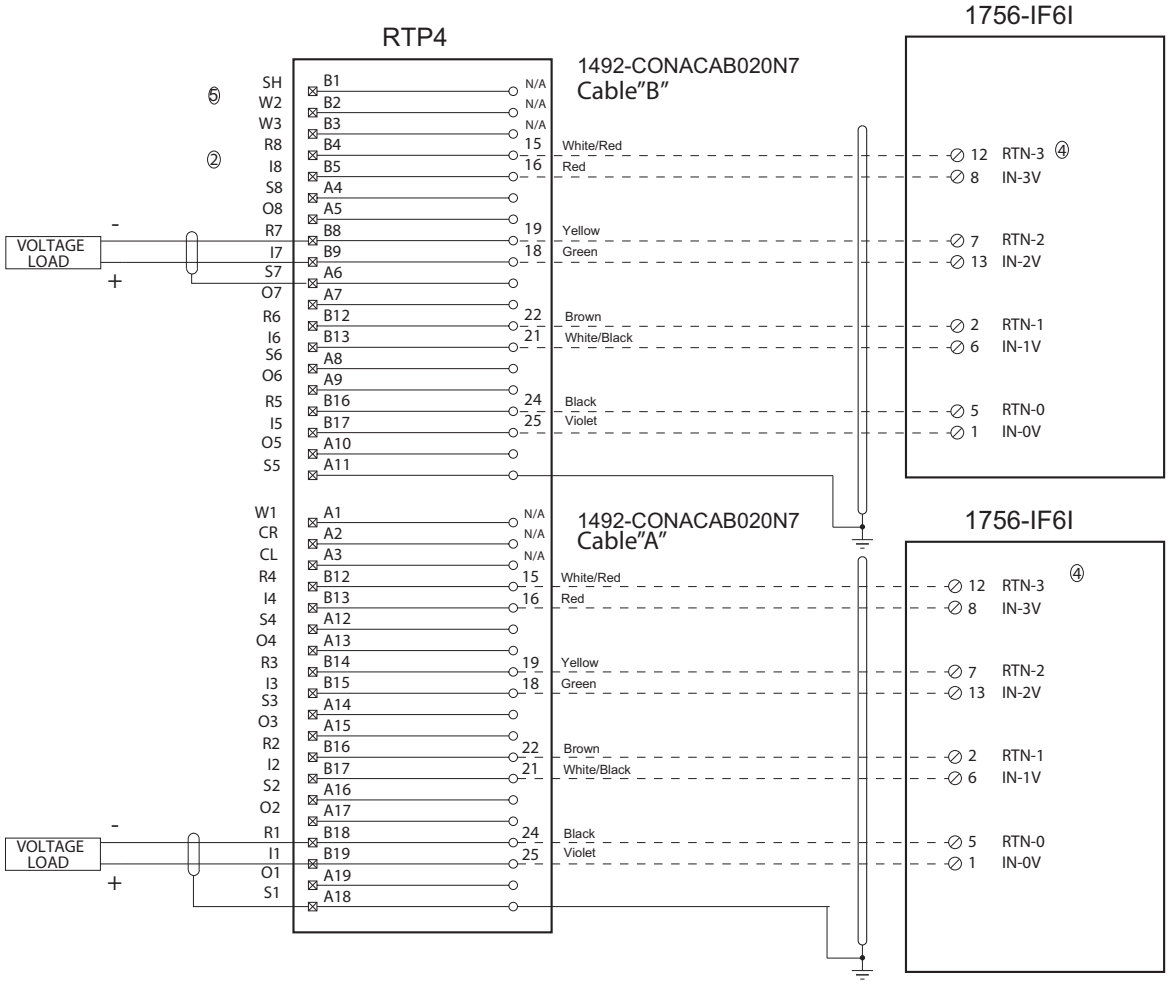

CONVERSION MODULE INSTALLATION AND APPLICATION CONSIDERATIONS

① Cables are available in 2.0m, or 5.0m

② Terminals starting with A are the lower row of terminals, B terminals are the upper row.

③ Follow your PLC Analog User Manual for proper shield grounding instructions.

④ RTN terminals are internally connected on the 1756-IF6I.

⑤ Terminals w1, w2, w3, are spares used for field wire convenience. NOTE: this is only true for modules RTP3 and RTP4. The Bul. 1492 cable does not connect to these terminals.

41171-078 (00)

1771-NT2 to 1756-IRT8I

IMPORTANT There are several key application considerations and system specifications (bottom of drawing) when using these components (conversion module, cable and input module). Read and understand these considerations before installation.

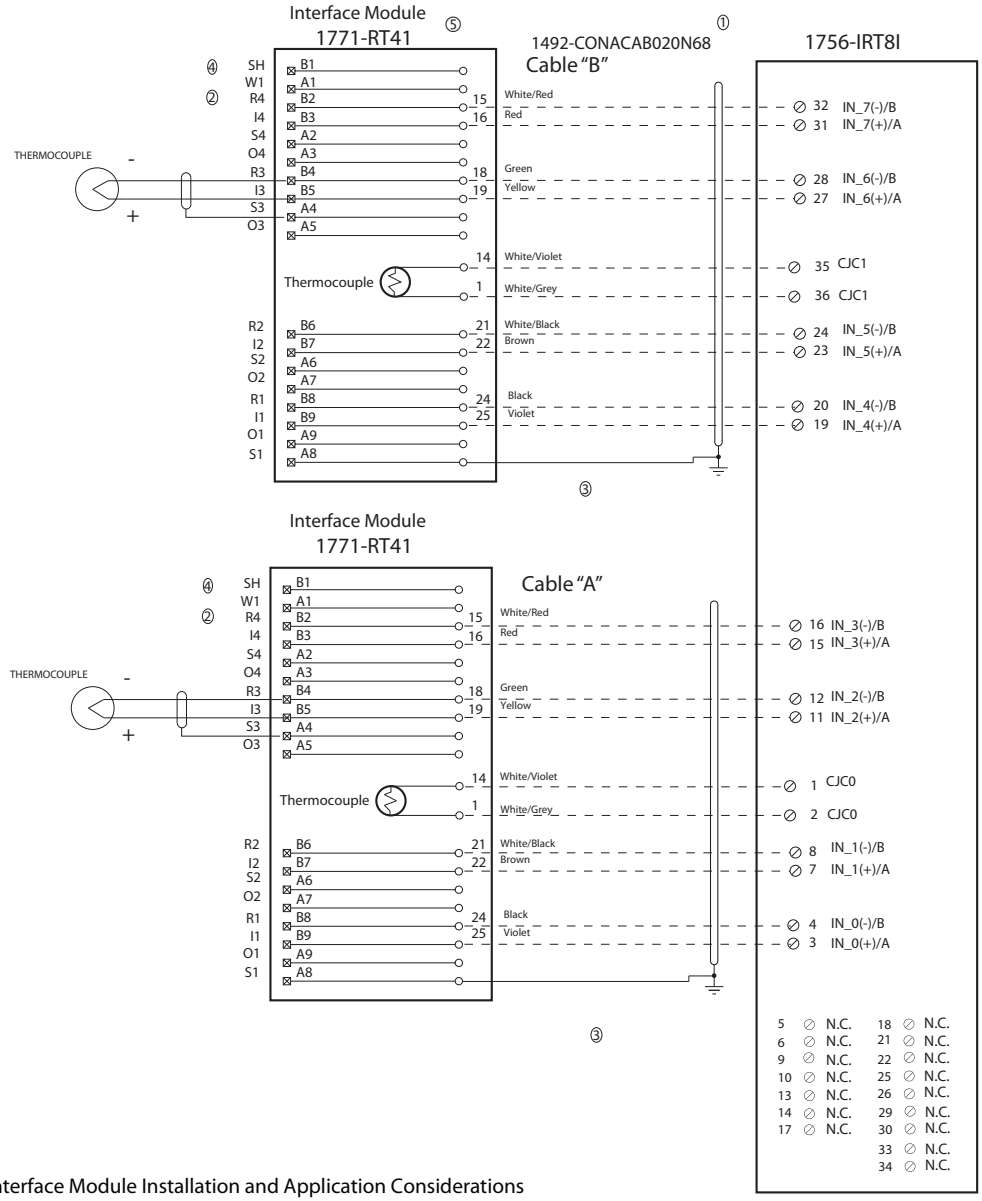

Interface Module Installation and Application Considerations

① Cables are available in lengths of 2.0M or 5.0M (020=2.0M, 050=5.0M)

② Terminals starting with A are the lower row of terminals, B terminals are the upper row.

③ Follow your PLC Analog User Manual for proper shield grounding instructions.

④ Terminals w1, w2, w3, are spares used for field wire convenience. NOTE: This is only true for module RTP3 and RTP4. The Bul. 1492 cable does not connect to these terminals.

⑤ This conversion solution requires replacement of the exisiting (1) 1771-RTP1 interface module with (2) 1771-RT41 interface modules. Each 1771-RTP1 and RT41 module has there own cold junction compensation thermocouple attached to the interface module.

DIR 10002306849 (Version 00)

1771-NT2 to 1756-IT6I2

IMPORTANT	There are several key application considerations and system specifications (bottom of drawing) when using these components (conversion module, cable and input module). Read and understand these considerations before installation.

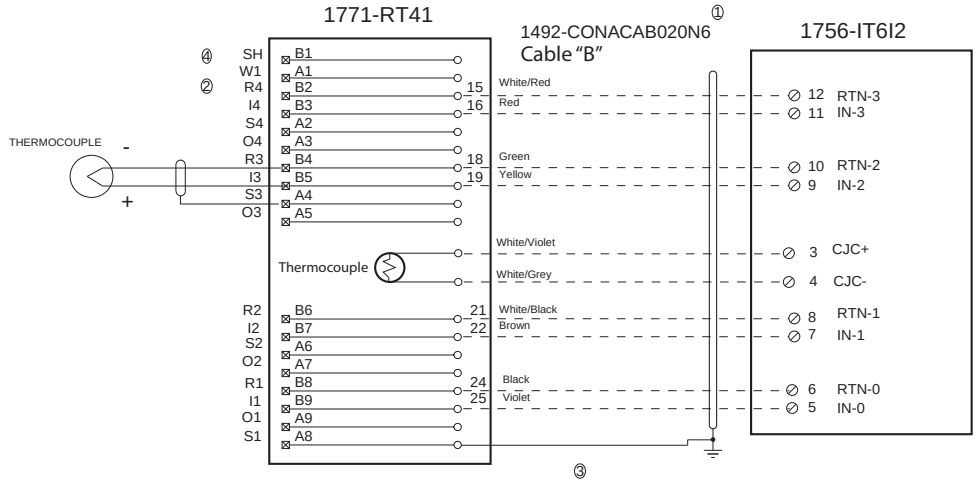

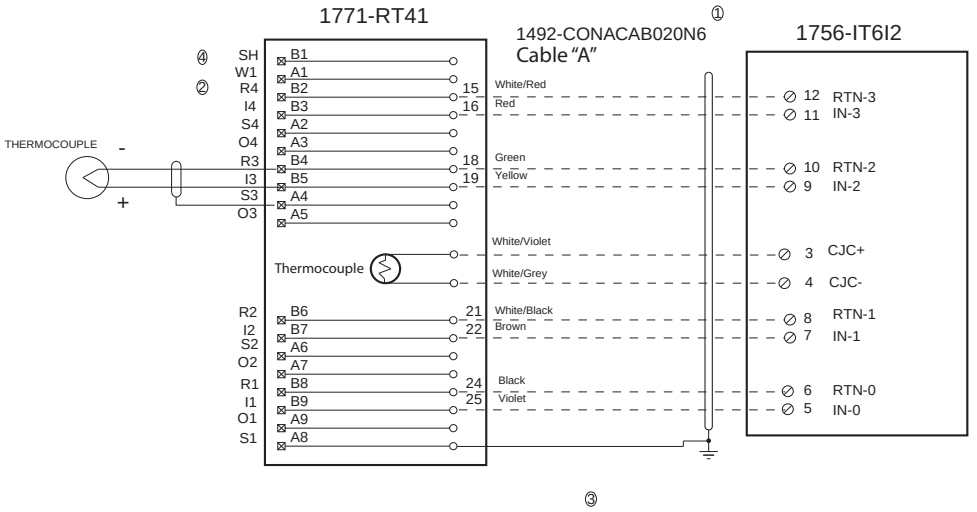

CONVERSION MODULE INSTALLATION AND APPLICATION CONSIDERATIONS

① Cables are available in 2.0M or 5.0M.
② Terminals starting with A are the lower row of terminals, B terminals are the upper row.
③ Follow your PLC Analog User Manual for proper shield grounding instructions.
④ Terminals W1, W2 and W3 are spares used for field wire convenience. NOTE. This is only true for modules RT41 . The Bul. 1492 cable does not connect to these terminals.

41171-077 (01)

Combination High Resolution I/O

1771-NIVR to1756-IRT8I and -IF8I

IMPORTANT	There are several key application considerations and system specifications (bottom of drawing) when using these components (conversion module, cable and input module). Read and understand these considerations before installation.

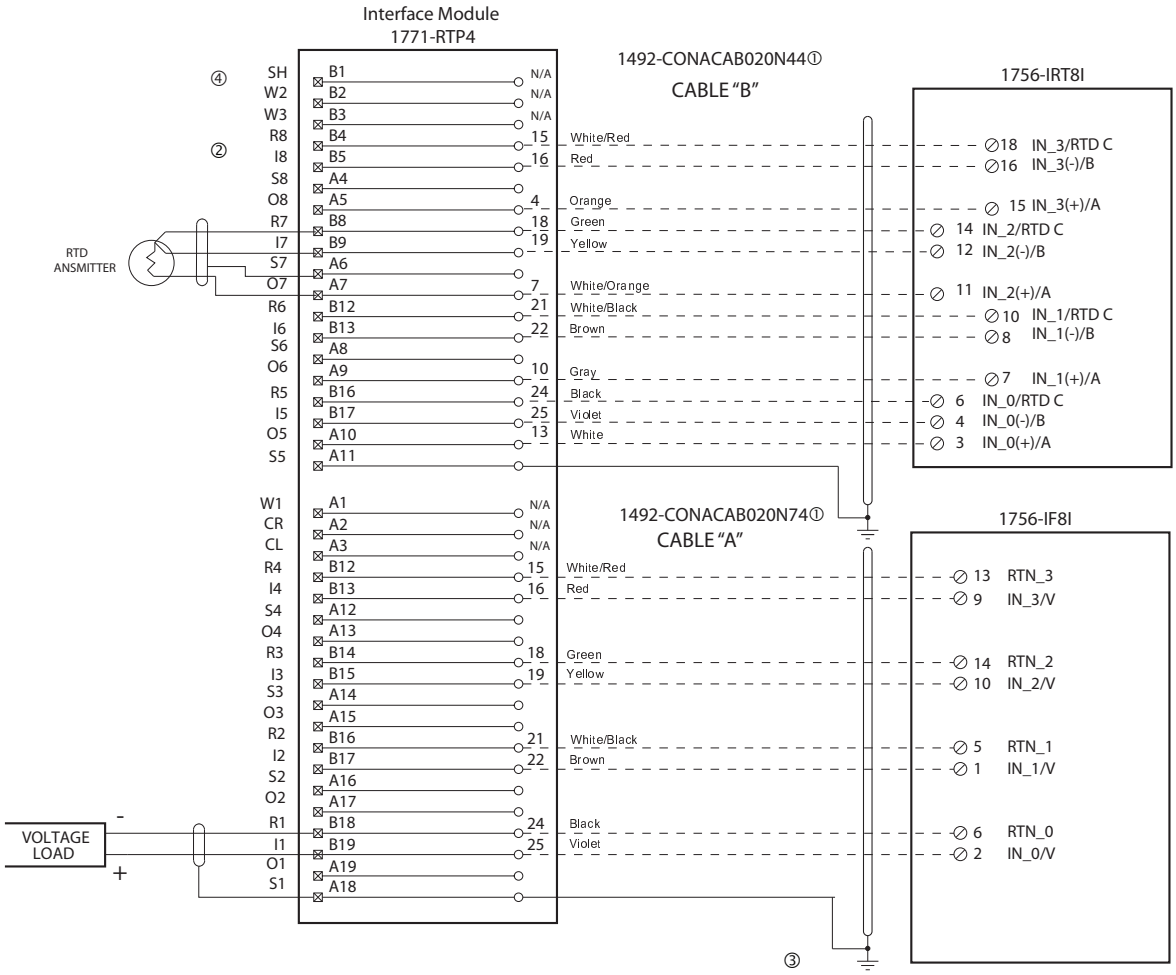

Interface Module Installation and Application Considerations

① Cables are available in lengths of 2.0M or 5.0M (020=2.0M, 050=5.0M)

② Terminals starting with A are the lower row of terminals, B terminals are the upper row.

③ Follow your PLC Analog User Manual for proper shield grounding instructions.

④ Terminals w1, w2, w3, are spares used for field wire convenience. NOTE: This is only true for module RTP3 and RTP4. The Bul. 1492 cable does not connect to these terminals.

DIR 10002306496(Version 00)

1771-NIVR to 1756-IR6Iand -IF6I

IMPORTANT	There are several key application considerations and system specifications (bottom of drawing) when using these components (conversion module, cable and input module). Read and understand these considerations before installation.

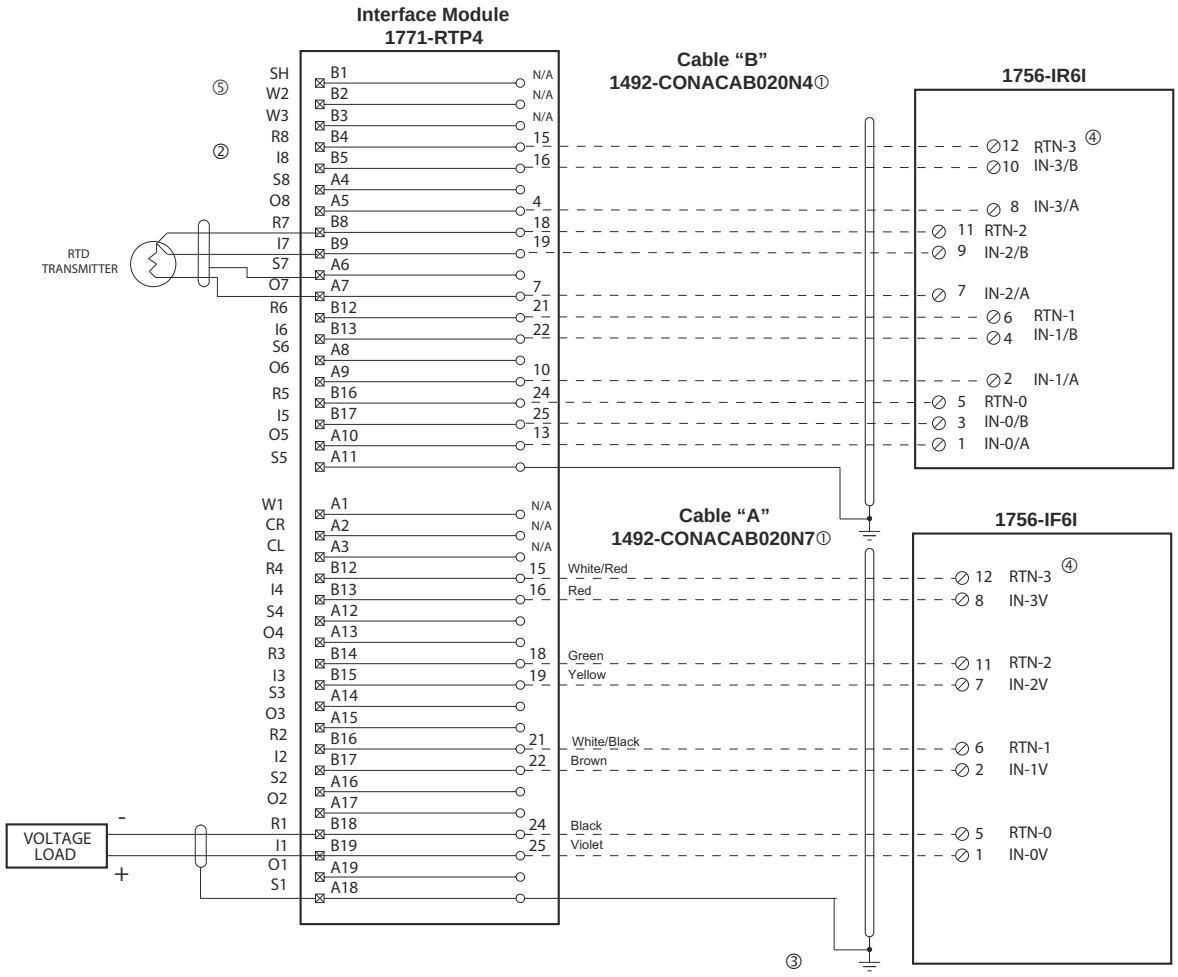

Conversion Module Installation and Application Considerations

① Cables are available in 2.0m, or 5.0m

② Terminals starting with A are the lower row of terminals, B terminals are the upper row.

③ Follow your PLC Analog User Manual for proper shield grounding instructions.

④ RTN terminals are internally connected on the 1756-IF6I.

⑤ Terminals w1, w2, w3, are spares used for field wire convenience. NOTE: This is only true for module RTP4. The Bul. 1492 cable does not connect to these terminals.

[Reference Doc: 41171-082 (Version 00)]

1771-NIVR to 1756-IRT8I and -IF8I

IMPORTANT	There are several key application considerations and system specifications (bottom of drawing) when using these components (conversion module, cable and input module). Read and understand these considerations before installation.

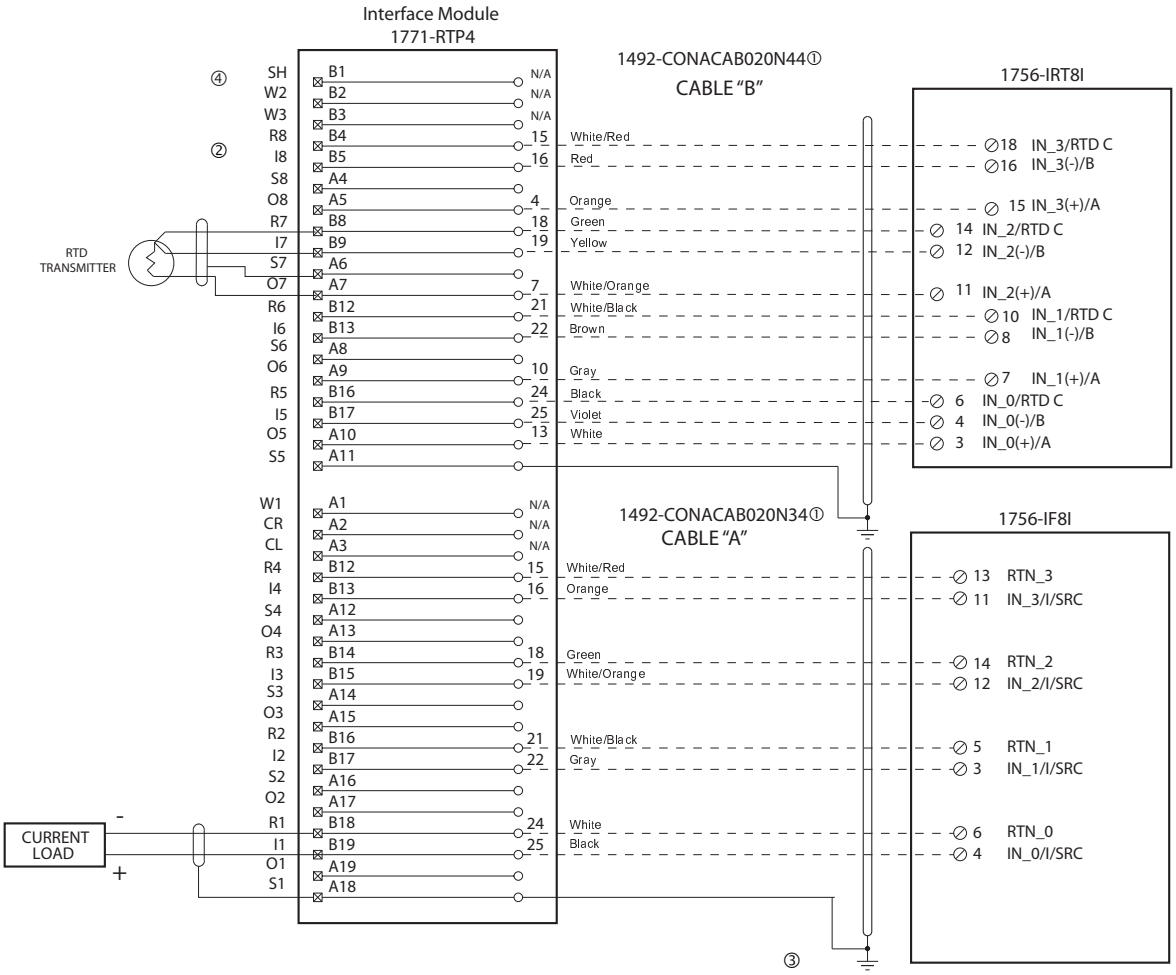

Interface Module Installation and Application Considerations

① Cables are available in lengths of 2.0M or 5.0M (020=2.0M, 050=5.0M)

② Terminals starting with A are the lower row of terminals, B terminals are the upper row.

③ Follow your PLC Analog User Manual for proper shield grounding instructions.

④ Terminals w1, w2, w3, are spares used for field wire convenience. NOTE: This is only true for module RTP3 and RTP4. The Bul. 1492 cable does not connect to these terminals.

DIR 10002306490 (Version 00)

1771-NIVR to 1756-IR6I and -IF6I

IMPORTANT	There are several key application considerations and system specifications (bottom of drawing) when using these components (conversion module, cable and input module). Read and understand these considerations before installation.

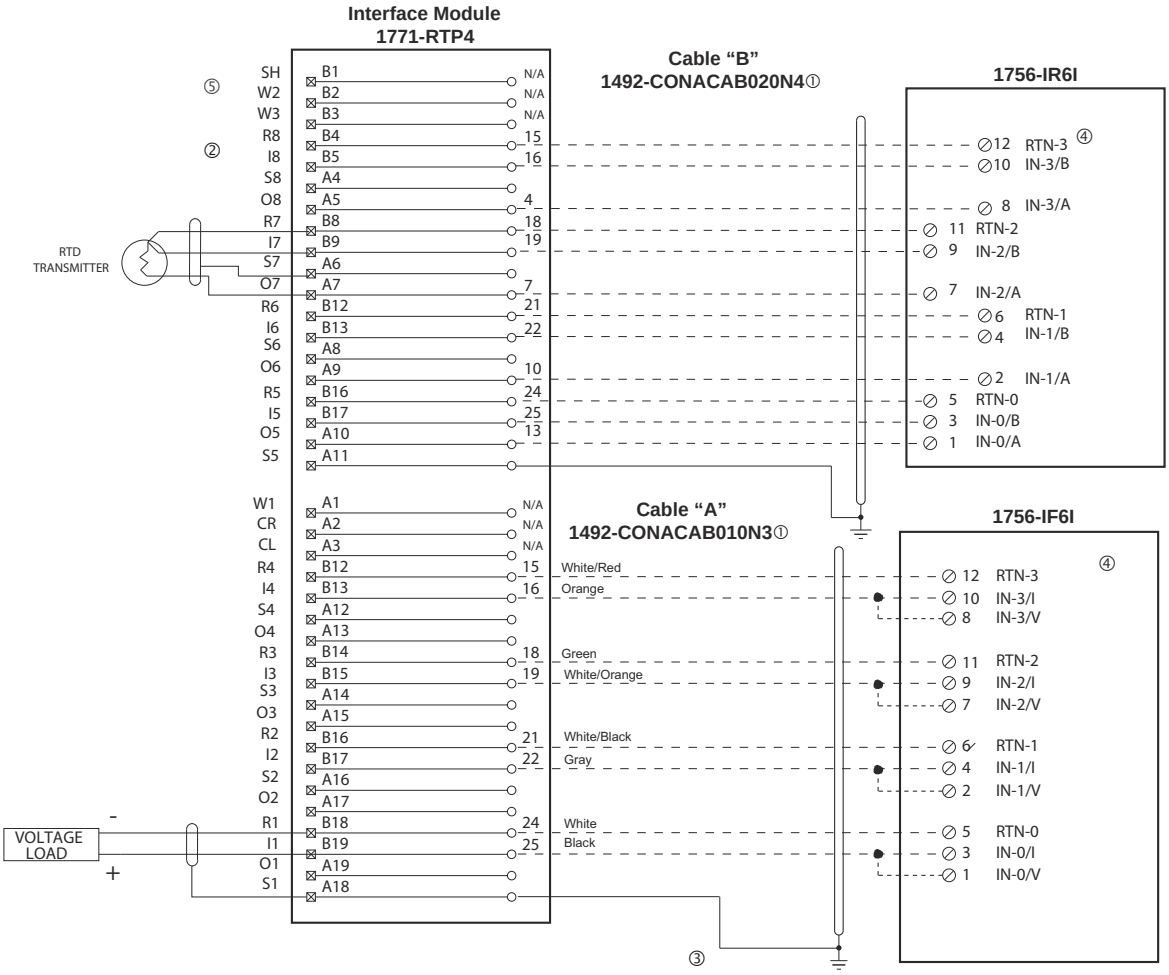

Conversion Module Installation and Application Considerations

① Cables are available in 2.0m, or 5.0m

② Terminals starting with A are the lower row of terminals, B terminals are the upper row.

③ Follow your PLC Analog User Manual for proper shield grounding instructions.

④ RTN terminals are internally connected on the 1756-IF6I.

⑤ Terminals w1, w2, w3, are spares used for field wire convenience. NOTE: This is only true for module RTP4. The Bul. 1492 cable does not connect to these terminals.

[Reference Doc: 41171-083 (Version 00)]

1771-NIVT to 1756-IRT8I and -IF8I

IMPORTANT	There are several key application considerations and system specifications (bottom of drawing) when using these components (conversion module, cable and input module). Read and understand these considerations before installation.

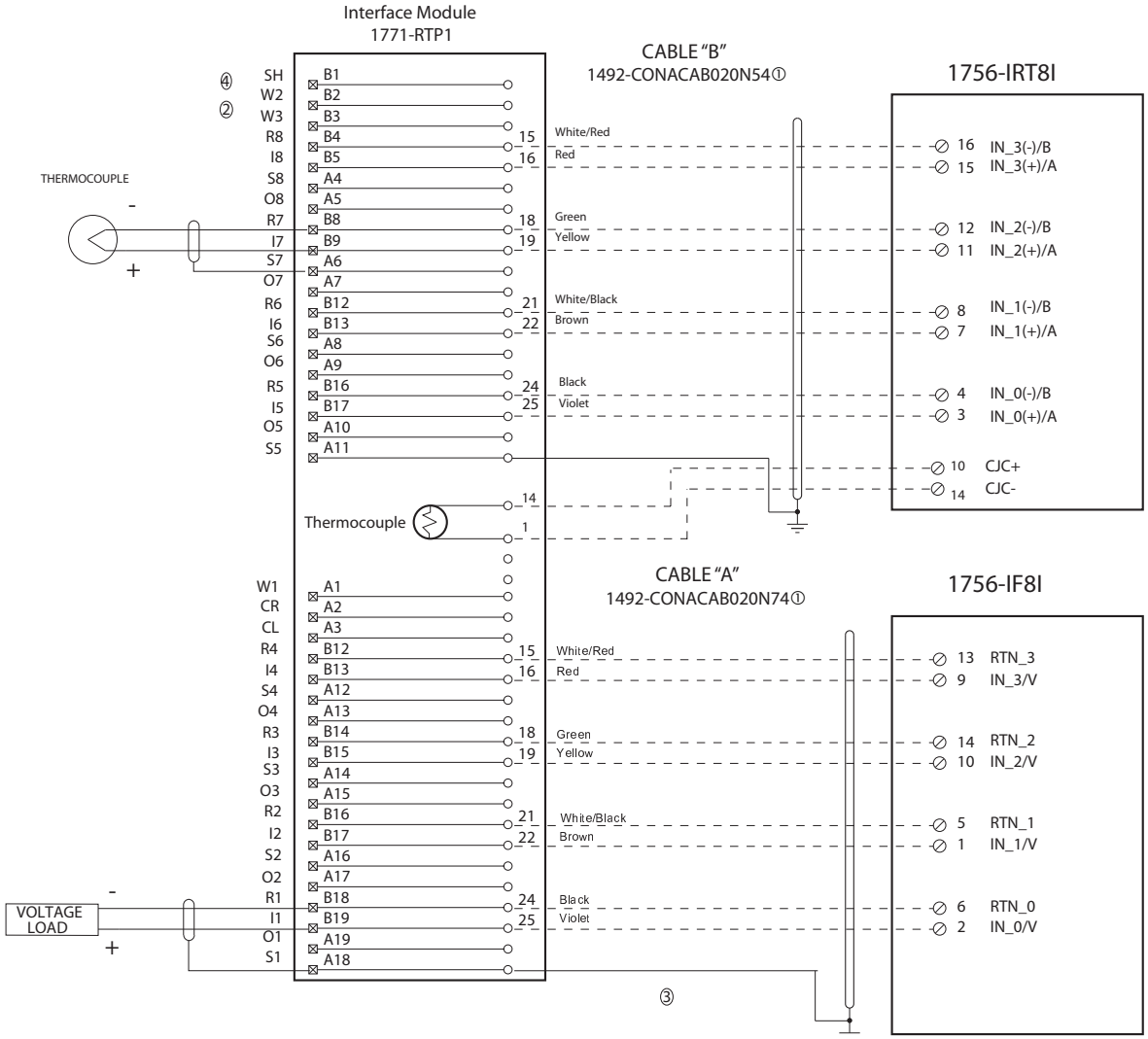

Interface Module Installation and Application Considerations

① Cables are available in lengths of 2.0M or 5.0M (020=2.0M, 050=5.0M)

② Terminals starting with A are the lower row of terminals, B terminals are the upper row.

③ Follow your PLC Analog User Manual for proper shield grounding instructions.

④ Terminals w1, w2, w3, are spares used for field wire convenience. NOTE: This is only true for module RTP3 and RTP4. The Bul. 1492 cable does not connect to these terminals.

DIR 10002306594 (Version 00)

1771-NIVT to 1756-IT6I and -IF6I

IMPORTANT	There are several key application considerations and system specifications (bottom of drawing) when using these components (conversion module, cable and input module). Read and understand these considerations before installation.

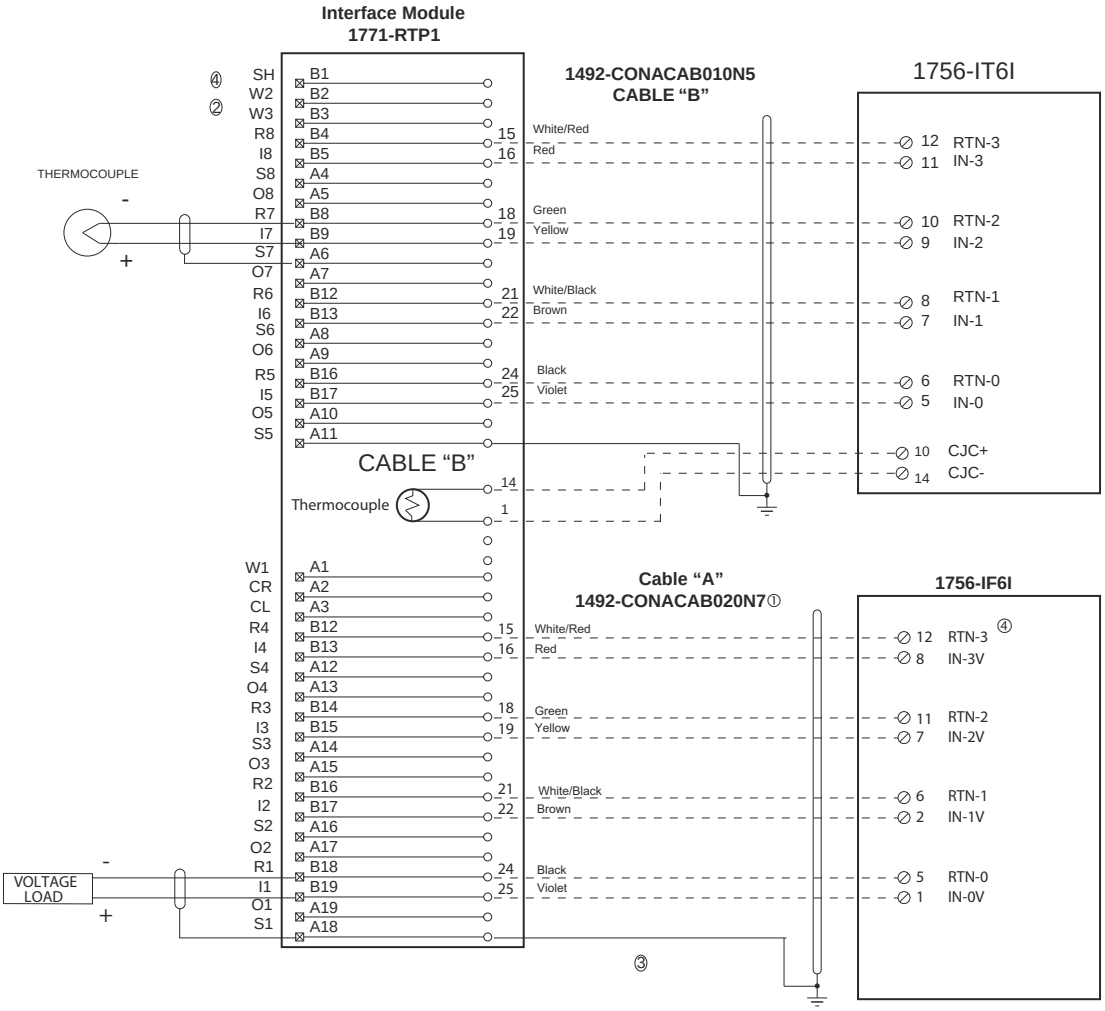

Conversion Module Installation and Application Considerations

① Cables are available in 2.0m, or 5.0m

② Terminals starting with A are the lower row of terminals, B terminals are the upper row.

③ Follow your PLC Analog User Manual for proper shield grounding instructions.

④ RTN terminals are internally connected on the 1756-IF6I.

⑤ Terminals w1, w2, w3, are spares used for field wire convenience. NOTE: This is only true for module RTP4. The Bul. 1492 cable does not connect to these terminals.

[Reference Doc: 41171-084 (Version 00)]

1771-NIVT to 1756-IRT8I and -IF8I

IMPORTANT	There are several key application considerations and system specifications (bottom of drawing) when using these components (conversion module, cable and input module). Read and understand these considerations before installation.

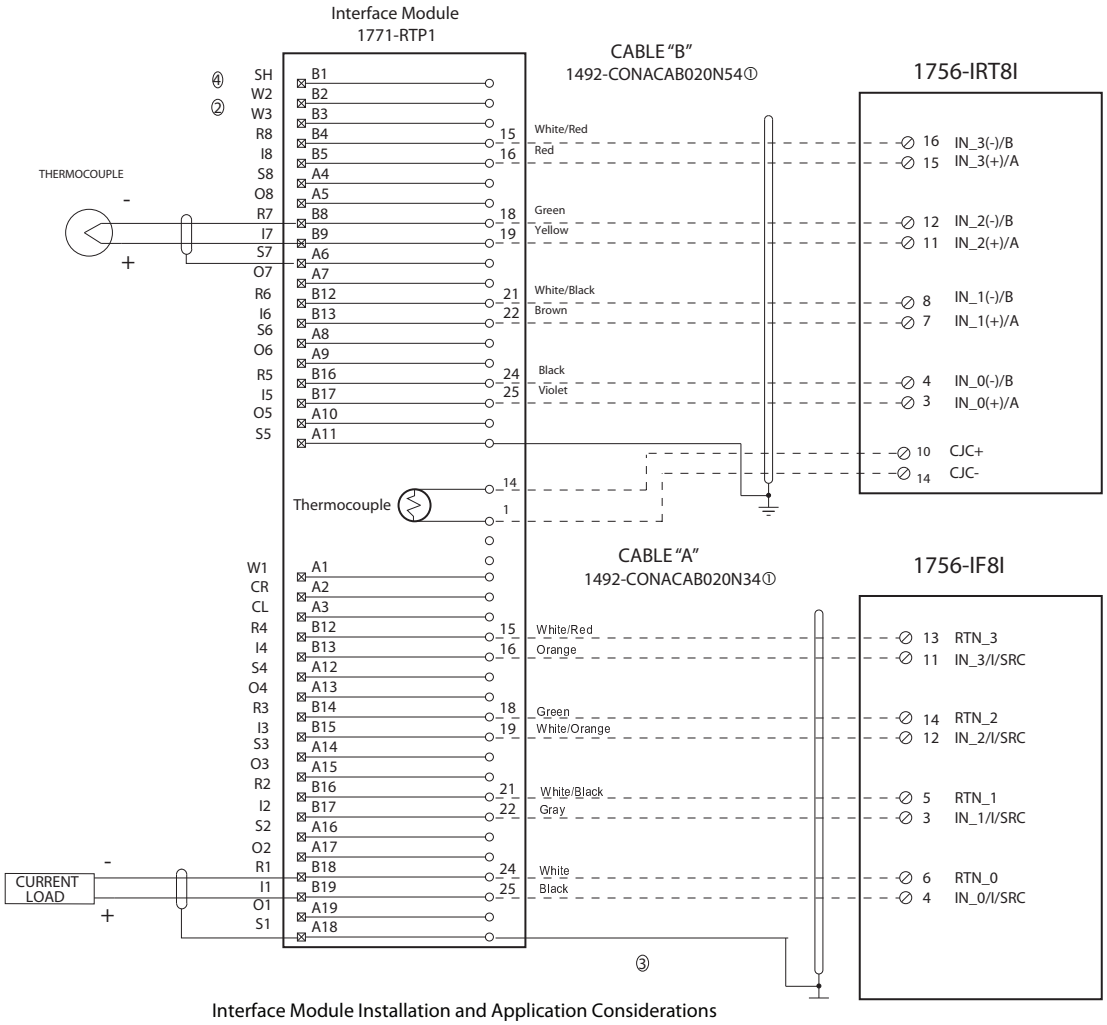

Interface Module Installation and Application Considerations

① This Bul. 1492 cable consists of a cable wired to one 1756-IF8I (or 1756-IRT8I). Recommended cable lengths of 2.0M or 5.0M (020=2.0M, 050=5.0M). See table 2 for other lengths.

② Terminals starting with A are the lower row of terminals, B terminals are the upper row.

③ Follow your PLC Analog User Manual for proper shield grounding instructions.

④ Terminals w1, w2, w3, are spares used for field wire convenience. NOTE: This is only true for module RTP4. The Bul. 1492 cable does not connect to these terminals.

DIR 10002306504 (Version 00)

1771-NIVT to 1756-IT6I and -IF6I

IMPORTANT	There are several key application considerations and system specifications (bottom of drawing) when using these components (conversion module, cable and input module). Read and understand these considerations before installation.

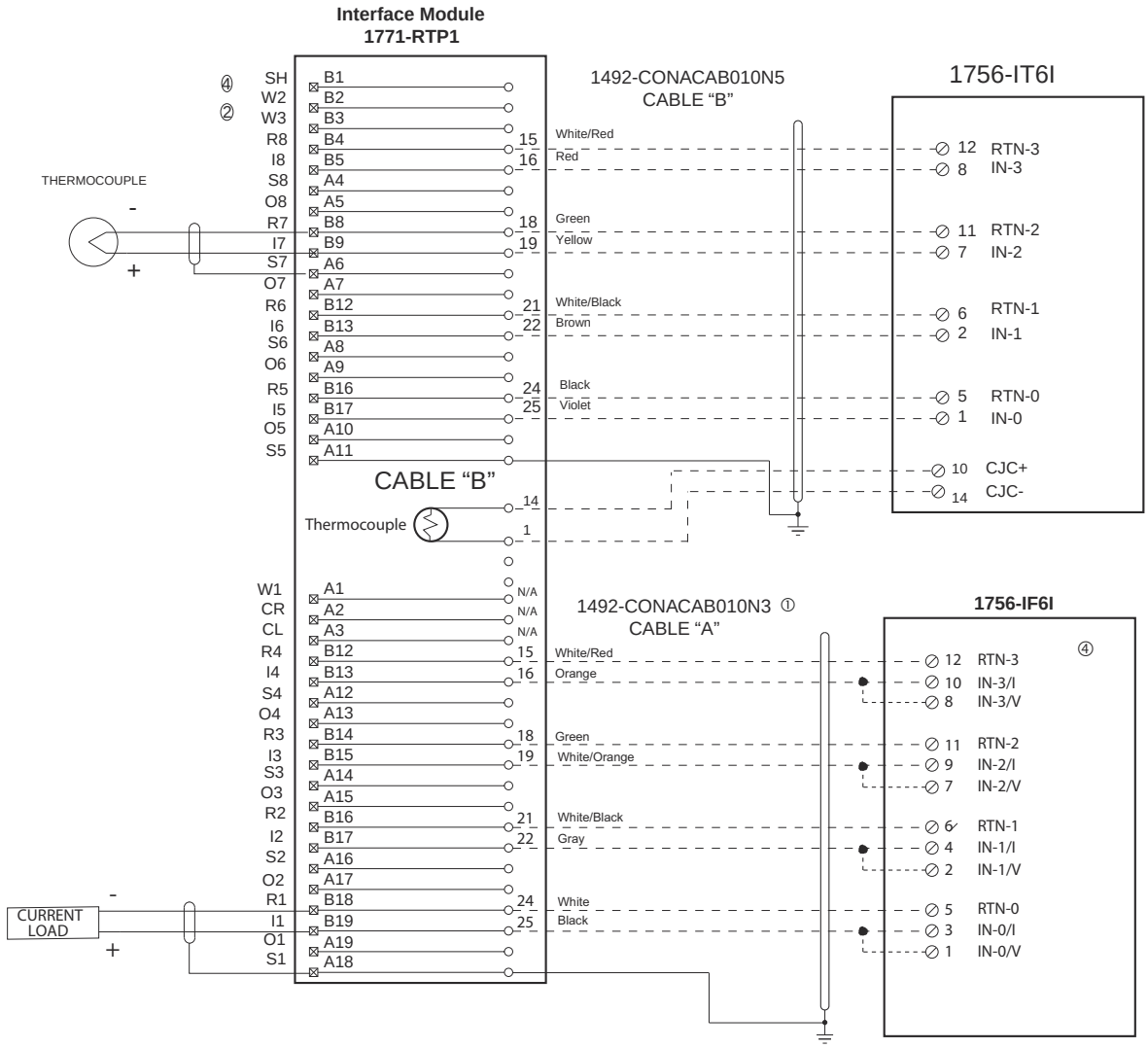

Conversion Module Installation and Application Considerations

① Cables are available in 2.0m, or 5.0m

② Terminals starting with A are the lower row of terminals, B terminals are the upper row.

③ Follow your PLC Analog User Manual for proper shield grounding instructions.

④ RTN terminals are internally connected on the 1756-IF6I.

⑤ Terminals w1, w2, w3, are spares used for field wire convenience. NOTE: This is only true for module RTP4. The Bul. 1492 cable does not connect to these terminals.

41171-085 Ver (00)

Rockwell Automation Support

Use the following resources to access support information.

Technical Support Center	Knowledgebase Articles, How-to Videos, FAQs, Chat, User Forums, and Product Notification Updates.	www.rockwellautomation.com/knowledgebase
Local Technical Support Phone Numbers	Locate the phone number for your country.	www.rockwellautomation.com/global/support/get-support-now.page
Direct Dial Codes	Find the Direct Dial Code for your product. Use the code to route your call directly to a technical support engineer.	www.rockwellautomation.com/global/support/direct-dial.page
Literature Library	Installation Instructions, Manuals, Brochures, and Technical Data.	www.rockwellautomation.com/literature
Product Compatibility and Download Center (PCDC)	Get help determining how products interact, check features and capabilities, and find associated firmware.	www.rockwellautomation.com/global/support/pcdc.page

Documentation Feedback

Your comments will help us serve your documentation needs better. If you have any suggestions on how to improve this document, complete the How Are We Doing? form at http://literature.rockwellautomation.com/idc/groups/literature/documents/du/ra-du002_-en-e.pdf.

Rockwell Automation maintains current product environmental information on its website at http://www.rockwellautomation.com/rockwellautomation/about-us/sustainability-ethics/product-environmental-compliance.page.

Allen-Bradley, ControlLogix, LISTEN. THINK. SOLVE, Rockwell Automation, and Rockwell Software are trademarks of Rockwell Automation, Inc.
Trademarks not belonging to Rockwell Automation are property of their respective companies.

www.rockwellautomation.com

Power, Control and Information Solutions Headquarters

Americas: Rockwell Automation, 1201 South Second Street, Milwaukee, WI 53204-2496 USA, Tel: (1) 414.382.2000, Fax: (1) 414.382.4444
Europe/Middle East/Africa: Rockwell Automation NV, Pegasus Park, De Kleetlaan 12a, 1831 Diegem, Belgium, Tel: (32) 2 663 0600, Fax: (32) 2 663 0640
Asia Pacific: Rockwell Automation, Level 14, Core F, Cyberport 3, 100 Cyberport Road, Hong Kong, Tel: (852) 2887 4788, Fax: (852) 2508 1846

Publication 1492-SG121E-EN-P - July 2016
Supersedes Publication 1492-SG121D-EN-P - October 2014

Copyright © 2016 Rockwell Automation, Inc. All rights reserved. Printed in the U.S.A.