Technical Data

Original Instructions

PanelView Plus 7 Performance Terminals

Catalog Numbers 2711P-T7C22D9P, 2711P-T7C22D9P-B, 2711P-T7C22A9P, 2711P-T7C22A9P-B, 2711P-B7C22D9P, 2711P-B7C22D9P-B, 2711P-B7C22A9P, 2711P-B7C22A9P-B, 2711P-T9W22D9P, 2711P-T9W22D9-B, 2711P-T9W22A9P, 2711P-T9W22A9P-B, 2711P-T10C22D9P, 2711P-T10C22D9P-B, 2711P-T10C22A9P, 2711P-T10C22A9P-B, 2711P-B10C22D9P, 2711P-B10C22D9P-B, 2711P-B10C22A9P, 2711P-B10C22A9-B, 2711P-T12W22D9P, 2711P-T12W22D9P-B, 2711P-T12W22A9P, 2711P-T12W22A9P-B, 2711P-T15C22D9P, 2711P-T15C22D9P-B, 2711P-T15C22A9P, 2711P-T15C22A9P-B, 2711P-B15C22D9P, 2711P-B15C22D9P-B, 2711P-B15C22A9P, 2711P-B15C22A9P-B, 2711P-T19C22D9P, 2711P-T19C22D9P-B, 2711P-T19C22A9P, 2711P-T19C22A9P-B, 2711P-T9W22D9P-BSHK, 2711P-T12W22D9P-BSHK, 2711P-T7C22D9PK, 2711P-T9W22D9PK, 2711P-T10C22D9PK, 2711P-T12W22D9PK, 2711P-T15C22D9PK, 2711P-T19C22D9PK, 2711P-B15C22D9PK, 2711P-T12W22D9P-BM001, 2711P-T12W22D9P-BM002, 2711P-T12W22D9P-BM003, 2711P-T12W22D9P-BM004, 2711P-T12W22D9P-BM005, 2711P-T12W22D9P-BM006, 2711P-T12W22D9P-BM007, 2711P-T12W22D9P-BM008, 2711P-T12W22D9P-BM009, 2711P-T12W22D9P-BM010, 2711P-T12W22D9P-BM011, 2711P-T12W22D9P-BM012, 2711P-T12W22D9P-BM013, 2711P-T12W22D9P-BM014, 2711P-T12W22D9P-BM015, 2711P-T12W22D9P-BM016

Topic	Page
Summary of Changes	2
Environmental Specifications	2
Resistance to Chemicals	3
Certifications	3
Technical Specifications	4
ArmorView Plus 7 Terminals	8
Accessories	12
HMI Software	14
Additional Resources	15

The PanelView™ Plus 7 Performance terminals are operator interface devices. They monitor and control devices that are attached to ControlLogix® and CompactLogix™ 5370 controllers on an EtherNet/IP™ network. Animated graphic and text displays provide operators a view into the operating state of a machine or process. Operators interact with the control system by using touch screen or keypad input.

The PanelView Plus 7 Performance terminals include these features and capabilities:

- FactoryTalk® View Machine Edition software, version 8.1, provides a familiar environment for creating HMI applications
- Windows CE operating system with desktop access for configuration and third-party applications
- Connection to ControlLogix or CompactLogix 5370 controllers
- Ethernet communication that can support Device Level Ring (DLR), linear, or star network topologies
- Web browser, Microsoft® file viewers, text editor, PDF viewer, remote desktop connection, and media player on the terminal desktop
- Conformal-coating available for all DC power, touch-only terminals, and the 15-in. DC power, keypad and touch terminal
- Stainless steel, hygienic, brandless, DC-power, and conformal-coating are available for the 9-in. wide-screen, touch-only units and the 12-in. wide-screen, touch-only units
- On-machine mounting available for the 12.1-in. wide-screen, touch-only terminal

Summary of Changes

This publication contains new and updated information as indicated in the following table.

Topic	Page
Updated the operating temperature of the ArmorView Plus 7 terminal as shown in the Environmental Specifications table.	2

Environmental Specifications

This table lists environmental specifications for the PanelView Plus 7 Performance terminals and the ArmorView™ Plus 7 terminal (which includes a 12.1-in PanelView Plus 7 Performance terminal).

Attribute	Value
Temperature, operating	6.5-in., 9-in., 10.4-in., 12.1-in., and 15-in. terminals 0…55 °C (32…131 °F) 19-in. terminals 0…50 °C (32…122 °F) ArmorView Plus 7 terminal 0…50 °C (32…122 °F) ambient(1)
Temperature, nonoperating	-25...+70 °C (-13...+158 °F)(2)
Heat dissipation	Typical BTU measurements were taken at 25 °C (77 °F): • 6.5-in. DC (touch, and touch with keypad), 51 BTU (typical) • 6.5-in. AC (touch, and touch with keypad), 53 BTU (typical) • 9-in. DC, 55 BTU (typical) • 9-in. AC, 58 BTU (typical) • 10.4-in. DC (touch, and touch with keypad), 51 BTU (typical) • 10.4-in. AC (touch, and touch with keypad), 56 BTU (typical) • 12.1-in. DC, 60 BTU (typical) • 12.1-in. AC, 67 BTU (typical) • 15-in. DC (touch, and touch with keypad), 61 BTU (typical) • 15-in. AC (touch, and touch with keypad), 68 BTU (typical) • 19-in. DC, 114 BTU (typical) • 19-in. AC, 119 BTU (typical)
Altitude, operating	2000 m (6562 ft)(2)
Relative humidity	5...95% without condensation(2)
Vibration	6.5-in., 9-in., 10.4-in., 12.1-in. terminals, and 12.1-in. terminals in the ArmorView Plus 7 enclosure 0.012 pk-pk, 10…57 Hz 2 g peak at 57…500 Hz 15-in. and 19-in. terminals 0.006 pk-pk, 10...57 Hz 1 g peak at 57...640 Hz
Shock, operating	15 g at 11 ms(3)
Shock, nonoperating	30 g at 11 ms(3)
Enclosure ratings	NEMA and UL Type 12, 13, 4X, also rated IP66 as Classified by UL(4) (5)
Airborne contaminants	For PanelView Plus 7 Performance conformal-coated PCBA level products with catalog numbers that end in K, product meets or exceeds the following requirement: • ANSI/ISA 71.04.2013 G3 environment Tested in accordance with: ASTM B845-97

(1) The optional VESA accessory kit (1/0 plate) is rated to 45 °C (113 °F).
(2) These values are the same for the ArmorView Plus 7 terminal.
(3) These values are the same for the ArmorView Plus 7 terminal when the VESA mount is used. When the arm mount coupling is used, the values are 5 g at 11 ms.
(4) For the ArmorView Plus 7 terminal, the enclosure ratings are 12, 13, 4, or 4X (see the ArmorView Plus 7 Installation Instructions, publication 2711P-IN013 for more detail) and IP66 as classified by UL.
(5) The PanelView Plus 7 Performance Stainless Steel, Series B terminals are also rated IP69 as Classified by UL and tested for IP69K according to ISO 20653.

Resistance to Chemicals

The outer surfaces of the terminal including the bezel, touch screen overlay, and panel gasket seal are tested for chemical resistance. Some of the chemicals can cause discoloration, but they do not interfere with the operation of the terminal.

For more information on chemical resistance of the product, go to https://rockwellautomation.custhelp.com and search the Knowledgebase for keywords 'Chemical Resistance PanelView Plus'.

IMPORTANT Do not operate the terminal in direct sunlight. Direct exposure to ultraviolet light can discolor the touch screen.

Certifications

This table lists certifications for the PanelView Plus 7 Performance terminals.

Certification[1]	Value
CE (EMC)	European Union 2014/35/EU EMC Directive, compliant with: • EN 61000-6-2; Industrial Immunity • EN 61000-6-4; Industrial Emissions • EN 61131-2; Programmable Controllers
CE (LVD)[2]	European Union 2014/30/EU Low Voltage Directive, compliant with: • EN 61131-2; Programmable Controllers
c-UL-us	The PanelView Plus 7 Performance terminals hold these certifications: c-UL-us Listed Industrial Control Equipment for use in Hazardous Locations (E10314) per standards ANSI / ISA 12.12.01 and CSA C22.2 No. 213. rated: – Class I, Div 2, Groups A, B, C, D – Class II, Div 2, Groups F and G – Class III, Div 1 – Class III, Div 2 Enclosure type ratings per UL50 and CSA C22.2 No. 94.2-07. Enclosure ingress protection that is classified by UL per IEC 60529. The ArmorView Plus 7 terminal holds the following certifications: c-UL-us listed Industrial Control Equipment for US and Canada (E113724) per standards UL 61010-1, UL 61010-2-201, CAN/CSA-C22.2 No. 61010-1, and CAN/CSA-C22.2 No. 61010-2-201. Enclosure type ratings per UL50 and CSA C22.2 No. 94.2-07. Enclosure ingress protection that is classified by UL per IEC 60529.
EtherNet/IP	ODVA conformance that is tested to EtherNet/IP specifications
KCC	Certificate of compliance
NSF	Stainless Steel Series B Terminals only, compliant with: •NSF/ANSI/3-A 14159-1; Hygiene Requirements for the Design of Meat and Poultry Processing Equipment •NSF/ANSI 169; Special Purpose Food Equipment and Devices"
RCM	Australian Radiocommunications Act, compliant with: • AS/NZS CISPR 11; Industrial Emissions
RoHS	China RoHS, Turkey RoHS, European RoHS 2011/65/EU
EAC	Certificate of compliance

(1) When marked. See the Product Certification link at rok.auto/certification for Declarations of Conformity, Certificates, and other certification details.
(2) This certification is not available for the ArmorView Plus 7 terminal.

Technical Specifications

The tables in this section provide technical specifications for the PanelView Plus 7 Performance terminals.

PanelView Plus 7 Performance 7-in and 9-in Terminals

Attribute	6.5-in. Touch 2711P--T7C22D9P, 2711P--T7C22D9P-B (1) 2711P-T7C22A9P, 2711P-T7C22A9P-B 2711P-T7C22D9PK(2)		6.5-in. Touch with Keypad 2711P-B7C22D9P, 2711P-B7C22D9P-B (1) 2711P-B7C22A9P, 2711P-B7C22A9P-B		9-in. Touch 2711P-T9W22D9P, 2711P-T9W22D9P-B (1) 2711P-T9W22A9P, 2711P-T9W22A9P-B 2711P-T9W22D9PK(2)	
Operator input	Touch		Touch with keypad		Touch	
Conformal-coated	Yes		—		Yes	
Display type	TFT Color					
Display size, diagonal	6.5-in.				9-in. widescreen	
Viewing area (W x H)	132 x 99 mm (5.2 x 3.9 in.)				196 x 118 mm (7.7 x 4.6 in.)	
Display resolution	640 x 480 VGA, 18-bit color graphics				800 x 480 WVGA, 18-bit color graphics	
Aspect ratio	4:3				5:3	
Brightness, typical	300 cd/m^2 (Nits)					
Backlight life	White light-emitting diode, solid state Life: 50,000 h min at 40 °C (104 °F) to half-brightness, backlight is not replaceable					
Touch screen	Analog resistive Actuation rating: 1 million presses Operating force: 100 grams					
Battery (real-time clock backup)	Accuracy: ±2 minutes per month. Battery life: 4 years min at 25 °C (77 °F) Replacement: CR2032 lithium coin cell					
Memory: • System • User	• 1 GB RAM and 512 MB storage • 80 MB, approx, nonvolatile storage for applications					
Secure Digital (SD) card slot	One SD card slot for external storage; supports cat. no. 1784-SD*x* and 1784-SDHCx cards					
USB ports: • Host • Device	• Two USB high-speed 2.0 host ports (type A) support removable flash drives for external storage • One high-speed 2.0 device port (type B) that will be functional in a future release					
Operating system	Windows CE with Extended Features and MS Office Viewers (includes FTP, VNC client server, ActiveX controls, PDF reader, third-party device support)					
Ethernet ports	Two 10/100Base-T, Auto MDI/MDI-X Ethernet ports that support Device Level Ring (DLR), linear, or star network topologies					
Software	FactoryTalk View Studio for Machine Edition, FactoryTalk ViewPoint, version 2.6 or later					
Electrical						
Input voltage	24V DC nom (18…30V DC)	100…240V AC	24V DC nom (18…30V DC)	100…240V AC	24V DC nom (18…30V DC)	100…240V AC
Power consumption	50 W max (2.1 A at 24V DC)	105VA	50 W max (2.1 A at 24V DC)	105VA	50 W max (2.1 A at 24V DC)	105VA
Power supply	Supports (SELV) and (PELV) 24V DC supplies(3)	—	Supports (SELV) and (PELV) 24V DC supplies(3)	—	Supports (SELV) and (PELV) 24V DC supplies(3)	—
Mechanical						
Weight, approx	1.2 kg (2.65 lb)		1.47 kg (3.25 lb)		1.58 kg (3.48 lb)	
Dimensions, approx (H x W x D)	170 x 212 x 69.6 mm 6.69 x 8.35 x 2.74 in.		179 x 285 x 69.6 mm 7.05 x 11.22 x 2.74 in.		190 x 280 x 69.6 mm 7.48 x 11.02 x 2.74 in.	
Cutout dimensions, approx (H x W)	142 x 184 mm 5.59 x 7.24 in.		142 x 237 mm 5.59 x 9.33 in.		162 x 252 mm 6.38 x 9.92 in.	

(1) Catalog numbers with a -B extension denote terminals that exclude the Allen-Bradley brand marking. Customers can put their own brand labels on these terminals.
(2) Catalog numbers that end with a K denote terminals that are conformal coated.
(3) DC-powered terminals support safety extra low voltage (SELV) and protective extra low voltage (PELV) 24V DC power supplies such as cat. nos. 1606-XLP95E, 1606-XLP100E, 2711P-RSACDIN.

PanelView Plus 7 Performance 10-in and 12-in Terminals

Attribute	10.4-in. Touch 2711P-T10C22D9P, 2711P-T10C22D9P-B (1) 2711P-T10C22A9P, 2711P-T10C22A9P-B 2711P-T10C22D9PK(2)		10.4-in. Touch with Keypad 2711P-B10C22D9P, 2711P-B10C22D9P-B (1) 2711P-B10C22A9P, 2711P-B10C22A9P-B		12.1-in. Touch 2711P-T12W22D9P, 2711P-T12W22D9P-B (1) 2711P-T12W22A9P, 2711P-T12W22A9P-B 2711P-T12W22D9PK(2)	
Operator input	Touch		Touch with keypad		Touch	
Conformal-coated	Yes		—		Yes	
Display type	TFT Color					
Display size, diagonal	10.4-in.				12.1-in. wide screen	
Viewing area (W x H)	211 x 158 mm (8.3 x 6.2 in.)				261 x 163 mm (10.3 x 6.4 in.)	
Display resolution	800 x 600 SVGA, 18-bit color graphics				1280 x 800 WXGA, 18-bit color graphics	
Aspect ratio	4:3				16:10	
Brightness, typical	300 cd/m^2 (Nits)					
Backlight life	White light-emitting diode, solid state Life: 50,000 h min at 40 °C (104 °F) to half-brightness, backlight is not replaceable					
Touch screen	Analog resistive Actuation rating: 1 million presses Operating force: 100 grams					
Battery (real-time clock backup)	Accuracy: ±2 minutes per month. Battery life: 4 years min at 25 °C (77 °F) Replacement: CR2032 lithium coin cell					
Memory: • System • User	• 512 MB RAM and 512 MB storage • 80 MB, approx, nonvolatile storage for applications					
Secure Digital (SD) card slot	One SD card slot for external storage; supports cat. no. 1784-SD*x* and 1784-SDHCx cards					
USB ports: • Host • Device	• Two USB high-speed 2.0 host ports (type A) support removable flash drives for external storage • One high-speed 2.0 device port (type B) that will be functional in a future release					
Operating system	Windows CE with Extended Features and MS Office Viewers (includes FTP, VNC client server, ActiveX controls, PDF reader, third-party device support)					
Ethernet ports	Two 10/100Base-T, Auto MDI/MDI-X Ethernet ports that support Device Level Ring (DLR), linear, or star network topologies					
Software	FactoryTalk View Studio for Machine Edition, FactoryTalk ViewPoint, version 2.6 or later					
Electrical						
Input voltage	24V DC nom (18…30V DC)	100…240V AC	24V DC nom (18…30V DC)	100…240V AC	24V DC nom (18…30V DC)	100…240V AC
Power consumption	50 W max (2.1 A at 24V DC)	105VA	50 W max (2.1 A at 24V DC)	105VA	50 W max (2.1 A at 24V DC)	105VA
Power supply	Supports (SELV) and (PELV) 24V DC supplies(3)	—	Supports (SELV) and (PELV) 24V DC supplies(3)	—	Supports (SELV) and (PELV) 24V DC supplies(3)	—
Mechanical						
Weight, approx	2.28 kg (5.03 lb)		2.58 kg (5.69 lb)		2.54 kg (5.60 lb)	
Dimensions, approx (H x W x D)	252 x 297 x 69.6 mm 9.92 x 11.69 x 2.74 in.		252 x 385 x 69.6 mm 9.92 x 15.16 x 2.74 in.		240 x 340 x 69.6 mm 9.69 x 13.39 x 2.74 in.	
Cutout dimensions, approx (H x W)	224 x 269 mm 8.82 x 10.59 in.		224 x 335 mm 8.82 x 13.19 in.		218 x 312 mm 8.58 x 12.28 in.	

(1) Catalog numbers with a -B extension denote terminals that exclude the Allen-Bradley brand marking. Customers can put their own brand labels on these terminals.
(2) Catalog numbers that end with a K denote terminals that are conformal coated.
(3) DC-powered terminals support safety extra low voltage (SELV) and protective extra low voltage (PELV) 24V DC power supplies such as cat. nos. 1606-XLP95E, 1606-XLP100E, 2711P-RSACDIN.

PanelView Plus 7 Performance 15-in and 19-in Terminals

Attribute	15-in. Touch 2711P-T15C22D9P, 2711P-T15C22D9P-B (1) 2711P-T15C22A9P, 2711P-T15C22A9P-B 2711P-T15C22D9PK(2)		15-in. Touch with Keypad 2711P-B15C22D9P, 2711P-B15C22D9P-B (1) 2711P-B15C22A9P, 2711P-B15C22A9P-B 2711P-B15C22D9PK(2)		19-in. Touch 2711P-T19C22D9P, 2711P-T19C22D9P-B (1) 2711P-T19C22A9P, 2711P-T19C22A9P-B 2711P-T19C22D9PK(2)	
Operator input	Touch		Touch with keypad		Touch	
Conformal-coated	Yes		Yes(3)		Yes	
Display type	TFT Color					
Display size, diagonal	15-in.				19-in.	
Viewing area (W x H)	304 x 228 mm (12.0 x 9.0 in.)				376 x 301 mm (14.8 x 11.9 in.)	
Display resolution	1024 x 768 XGA, 18-bit color graphics				1280 x 1024 SXGA, 18-bit color graphics	
Aspect ratio	4:3				5:4	
Brightness, typical	300 cd/m^2 (Nits)					
Backlight life	White light-emitting diode, solid state Life: 50,000 h min at 40 °C (104 °F) to half-brightness, backlight is not replaceable					
Touch screen	Analog resistive Actuation rating: 1 million presses Operating force: 100 grams					
Battery (real-time clock backup)	Accuracy: ±2 minutes per month. Battery life: 4 years min at 25 °C (77 °F) Replacement: CR2032 lithium coin cell					
Memory: • System • User	• 512 MB RAM and 512 MB storage • 80 MB, approx, nonvolatile storage for applications					
Secure Digital (SD) card slot	One SD card slot for external storage; supports cat. no. 1784-SD*x* and 1784-SDHCx cards					
USB ports: • Host • Device	• Two USB high-speed 2.0 host ports (type A) support removable flash drives for external storage • One high-speed 2.0 device port (type B) that will be functional in a future release					
Operating system	Windows CE with Extended Features and MS Office Viewers (includes FTP, VNC client server, ActiveX controls, PDF reader, third-party device support)					
Ethernet ports	Two 10/100Base-T, Auto MDI/MDI-X Ethernet ports that support Device Level Ring (DLR), linear, or star network topologies					
Software	FactoryTalk View Studio for Machine Edition, FactoryTalk ViewPoint, version 2.6 or later					
Electrical						
Input voltage, DC	24V DC nom (18…30V DC)	100…240V AC	24V DC nom (18…30V DC)	100…240V AC	24V DC nom (18…30V DC)	100…240V AC
Power consumption, DC	50 W max (2.1 A at 24V DC)	105VA	50 W max (2.1 A at 24V DC)	105VA	50 W max (2.1 A at 24V DC)	105VA
Power supply	Supports (SELV) and (PELV) 24V DC supplies(4)	—	Supports (SELV) and (PELV) 24V DC supplies(4)	—	Supports (SELV) and (PELV) 24V DC supplies(4)	—
Mechanical						
Weight, approx	3.69 kg (8.14 lb)		4.14 kg (9.13 lb)		5.62 kg (12.40 lb)	
Dimensions, approx (H x W x D)	318 x 381 x 69.6 mm 12.52 x 15.00 x 2.74 in		322 x 484 x 69.6 mm 12.68 x 19.06 x 2.74 in		411 x 485 x 69.6 mm 16.18 x 19.09 x 2.74 in	
Cutout dimensions, approx (H x W)	290 x 353 mm 11.42 x 13.90 in		290 x 418 mm 11.42 x 16.46 in		383 x 457 mm 15.08 x 17.99 in	

(1) Catalog numbers with a -B extension denote terminals that exclude the Allen-Bradley brand marking. Customers can put their own brand labels on these terminals.
(2) Catalog numbers that end with a K denote terminals that are conformal coated.
(3) Only the branded, DC-powered, 15-in. touch with keypad terminal is conformal-coated.
(4) DC-powered terminals support safety extra low voltage (SELV) and protective extra low voltage (PELV) 24V DC power supplies such as cat. nos. 1606-XLP95E, 1606-XLP100E, 2711P-RSACDIN.

PanelView Plus 7 Performance Stainless Steel 9-in. and 12-in. Terminals

Attribute	9-in. Touch 2711P-T9W22D9P-BSHK	12.1-in. Touch 2711P-T12W22D9P-BSHK
Operator input	Touch	
Conformal-coated	Yes	
Display type	TFT Color	
Display size, diagonal	9-in. wide screen	12.1-in. wide screen
Viewing area (W x H)	196 x 118 mm (7.7 x 4.6 in.)	261 x 163 mm (10.3 x 6.4 in.)
Display resolution	800 x 480 WVGA, 18-bit color graphics	1280 x 800 WXGA, 18-bit color graphics
Aspect ratio	5:3	16:10
Brightness, typical	300 cd/m^2 (Nits)	
Backlight life	White light-emitting diode, solid state Life: 50,000 h min at 40 °C (104 °F) to half-brightness, backlight is not replaceable	
Touch screen	Analog resistive Actuation rating: 1 million presses Operating force: 100 grams	
Battery (real-time clock backup)	Accuracy: ±2 minutes per month Battery life: 4 years min at 25 °C (77 °F) Replacement: CR2032 lithium coin cell	
Memory: • System • User	• 512 MB RAM and 512 MB storage • 80 MB, approx, nonvolatile storage for applications	
Secure Digital (SD) card slot	One SD card slot for external storage; supports cat. no. 1784-SD*x* and 1784-SDHC*x* cards	
USB ports: • Host • Device	• Two USB high-speed 2.0 host ports (type A) support removable flash drives for external storage • One high-speed 2.0 device port (type B) that will be functional in a future release	
Operating system	Windows CE with Extended Features and MS Office Viewers (includes FTP, VNC client server, ActiveX controls, PDF reader, third-party device support)	
Ethernet ports	Two 10/100Base-T, Auto MDI/MDI-X Ethernet ports that support Device Level Ring (DLR), linear, or star network topologies	
Software	FactoryTalk View Studio for Machine Edition, FactoryTalk ViewPoint, version 2.6 or later	
Electrical		
Input voltage	24V DC nom (18…30V DC)	
Power consumption	50 W max (2.1 A at 24V DC)	
Power supply	Supports (SELV) and (PELV) 24V DC supplies(1)	
Mechanical		
Stainless steel bezel	304 stainless steel with hygienic No. 4A finish	
Silicone gasket	Gasket material is compliant with FDA 21 CFR 177.2600	
Weight, approx	2.1 kg (4.6 lb)	3.7 kg (8.2 lb)
Dimensions, approx (H x W x D)	190 x 280 x 69.6 mm 7.48 x 11.02 x 2.74 in.	240 x 340 x 69.6 mm 9.69 x 13.39 x 2.74 in.
Cutout dimensions, approx (H x W)	162 x 252 mm 6.38 x 9.92 in.	218 x 312 mm 8.58 x 12.28 in.

(1) DC-powered terminals support safety extra low voltage (SELV) and protective extra low voltage (PELV) 24V DC power supplies such as cat. nos. 1606-XLP95E, 1606-XLP100E, 2711P-RSACDIN.

ArmorView Plus 7 Terminals

12.1 inch ArmorView Plus 7 Terminals		
Attribute	**2711P-T12W22D9P-BM001…2711P-T12W22D9P-BM002**	**2711P-T12W22D9P-BM003…2711P-T12W22D9P-BM016**
Operator input	Touch	Touch screen and push button, selector switches, or key switches
Display type	TFT Color	
Display size, diagonal	12.1-in. wide screen	
Viewing area (W x H)	261 x 163 mm (10.3 x 6.4 in.)	
Display resolution	1280 x 800 WXGA, 18-bit color graphics	
Aspect ratio	16:10	
Brightness, typical	300 cd/m^2 (Nits)	
Backlight life	White light-emitting diode, solid-state Life: 50,000 h min at 40 °C (104 °F) to half-brightness, backlight is not replaceable	
Touch screen	Analog resistive Actuation rating: 1 million presses Operating force: 100 grams	
E-stop	—	Illuminated twist-to-release 300,000 cycles
Push buttons	—	Momentary push buttons 10,000,000 cycles
Selector switches	—	Two-position selector, three-position selector, three-position key selector 1,000,000 cycles
Battery (real-time clock backup)	Accuracy: ±2 minutes per month Battery life: 4 years min at 25 °C (77 °F) Replacement: CR2032 lithium coin cell	
Memory: • System • User	 512 MB RAM and 512 MB storage 80 MB, approx, nonvolatile storage for applications	
Secure Digital (SD) card slot	One SD card slot for external storage; supports cat. nos. 1784-SDx and 1784-SDHCx cards	
USB ports: • Host • Device	 Two USB high-speed 2.0 host ports (type A) support removable flash drives for external storage One high-speed 2.0 device port (type B) that will be functional in a future release	
Operating system	Windows CE with Extended Features and MS Office Viewers (includes FTP, VNC client server, ActiveX controls, PDF reader, third-party device support)	
Ethernet ports	Two 10/100Base-T, Auto MDI/MDI-X Ethernet ports that support Device Level Ring (DLR), linear, or star network topologies	
Software	FactoryTalk View Studio for Machine Edition, FactoryTalk ViewPoint, version 2.6 or later	
Electrical		
Input voltage	24V DC nom (18…30V DC)	
Power consumption	37 W max (1.54 A at 24V DC)	
Power supply	Supports (SELV) and (PELV) 24V DC supplies(1)	
Mechanical		
Weight, approx (with arm adapter)	7.41 kg (16.34 lb)	
Weight, approx (with VESA Kit)	8.19 kg (18.06 lb)	
Dimensions with arm adapter, approx (H x W x D)	381.6 x 345 x 166.6 mm 15.02 x 13.58 x 6.56 in.	
Dimensions with I/O plate, approx (H x W x D)	345 x 345 x 166.6 mm 13.58 x 13.58 x 6.56 in.	

(1) DC-powered terminals support safety extra low voltage (SELV) and protective extra low voltage (PELV) 24V DC power supplies such as cat. nos. 1606-XLP95E, 1606-XLP100E, 2711P-RSACDIN.

Product Dimensions

This section provides product dimensions. The PanelView Plus 7 Performance 10.4-inch touch and combination keypad with touch devices are shown for illustrative purposes. Stainless steel terminals use different mounting clips, but the dimensions are the same. All other terminal sizes look similar. Dimensions for the 12.1-in. ArmorView Plus 7 terminal can be found on page 10.

PanelView Plus 7 Performance Terminal Dimensions - 10.4-in. Model

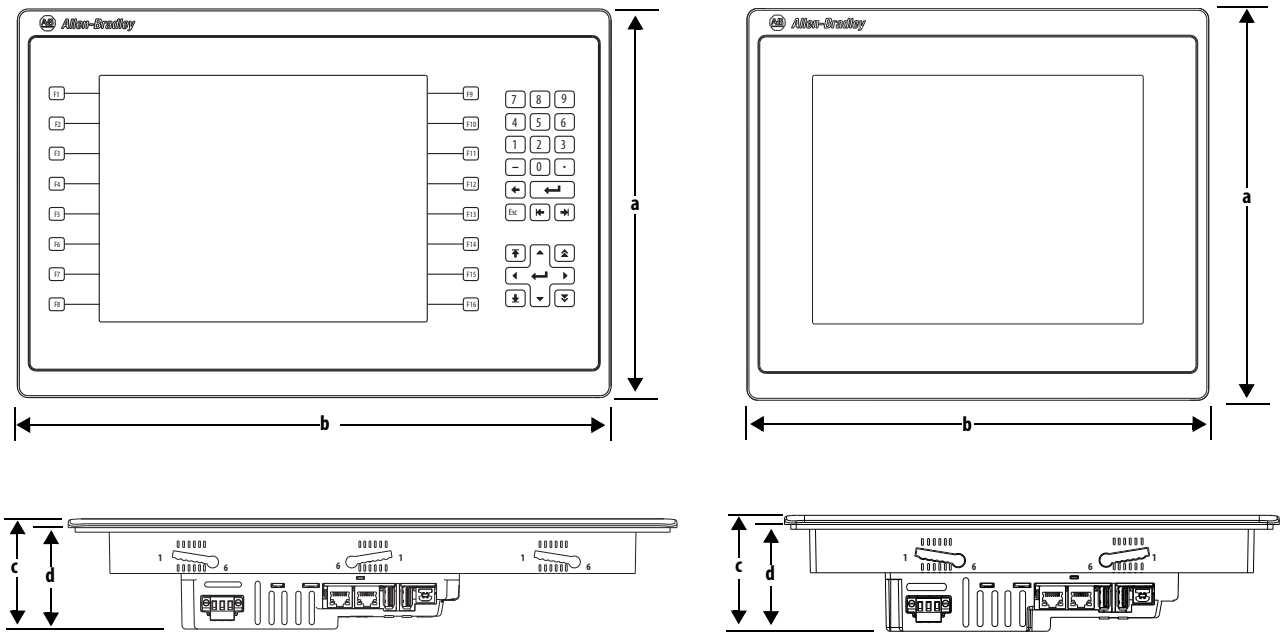

PanelView Plus 7 Performance Terminal Dimensions

Terminal Size	Input Type	Height (a) mm (in.)	Width (b) mm (in.)	Overall Depth (c) mm (in.)	Mounted Depth (d) mm (in.)
6.5-in.	Key/touch	179 (7.05)	285 (11.22)	69.6 (2.74)	63.6 (2.50)
	Touch	170 (6.69)	212 (8.35)		
9-in.	Touch	190 (7.48)	280 (11.02)		
10.4-in.	Key/touch	252 (9.92)	385 (15.16)		
	Touch	252 (9.92)	297 (11.69)		
12.1-in.	Touch	246 (9.69)	340 (13.39)		
15-in.	Key/touch	322 (12.68)	484 (19.06)		
	Touch	318 (12.52)	381 (15.00)		
19-in.	Touch	411 (16.18)	485 (19.09)		

When mounted in a panel, the front of the bezel extends less than 6.36 mm (0.25 in.) from the front of the panel.

This section provides product dimensions for the ArmorView Plus 7 terminal. This terminal provides options for mounting on an arm mount system, a pedestal, or VESA bracket (with the use of an optional VESA kit).

ArmorView Plus 7 Terminal Dimensions with Arm Adapter

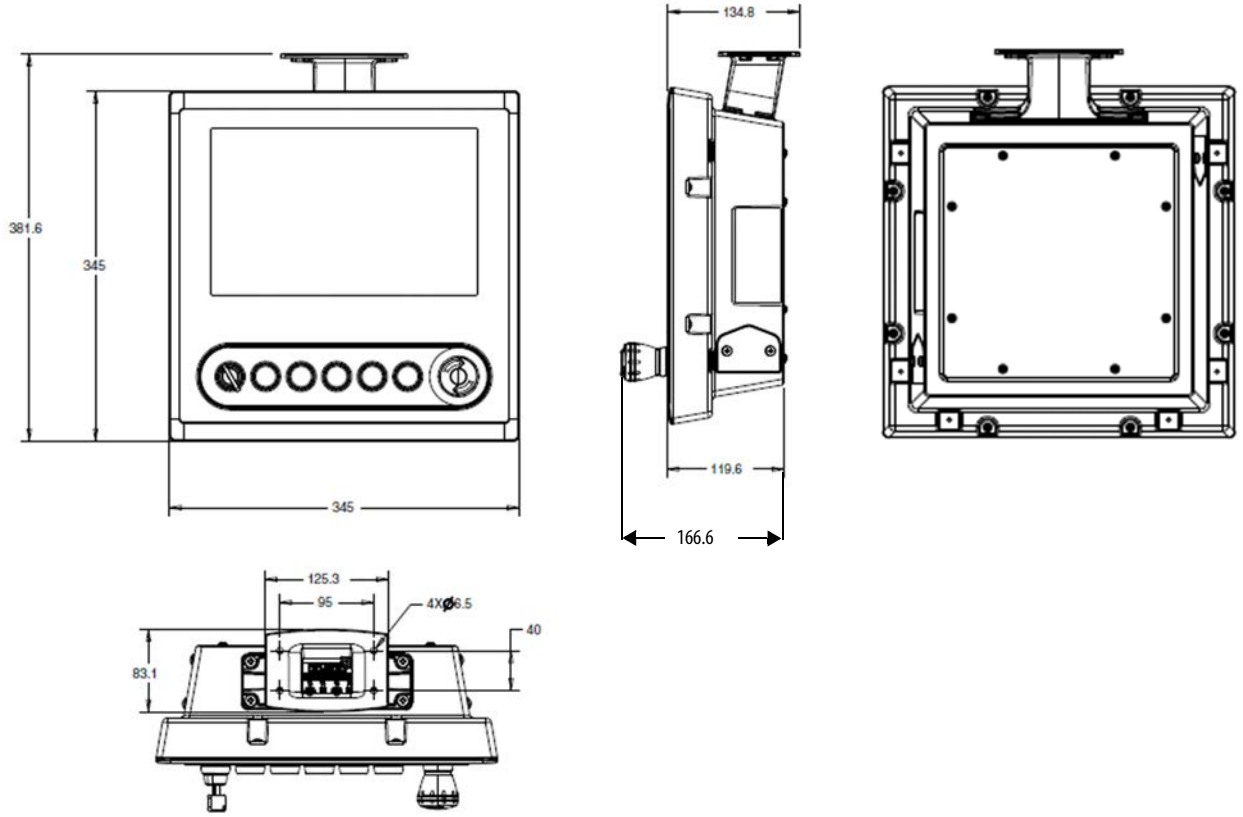

The ArmorView Plus 7 product is designed to be used with couplers that have the same mounting pattern, such as those shown in the table. For information about the dimensions of the arm mount adapter, see Arm Mount Adapter Dimensions on page 11.

	Rittal	Hoffman	Other
Supported Coupling	CP 6501.130 (CP40 120x65) CP 6206.340 (CP60 swivel) CP 6206.360 (CP60 rigid)	S1MFC	Any compatible coupling(1)
Supported Arm Systems	CP40 (steel) CP60 (extruded aluminum)	Syspend 180	
Supported Pedestal Systems	CP 6106.500 with these CP60 couplings: • CP 6206.340 • CP 6206.360	–	

(1) The arm mount adapter accommodates coupling with four M6 mounting screws 95 mm (3.74 in.) x 40 mm (1.58 in.) with a seal that is contained in 80.9 mm (3.19 in.) x 123.1 mm (4.85 in.). The product will only meet specified NEMA, UL Type, and IEC ratings with user-installed accessories (stack light, buttons, indicators, and so on), if the accessories have equivalent ratings and are installed properly.

Arm Mount Adapter Dimensions

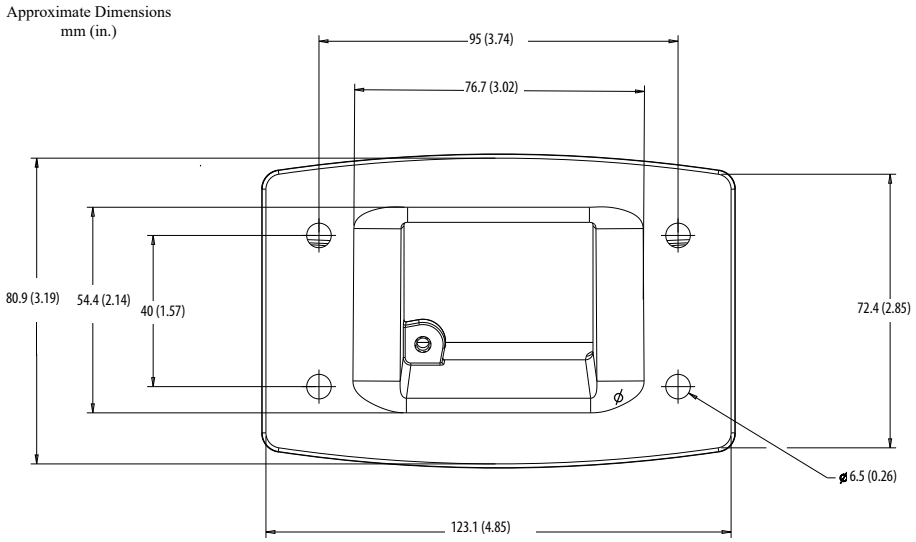

ArmorView Plus 7 Terminal Dimensions with VESA Mount and I/O Plate

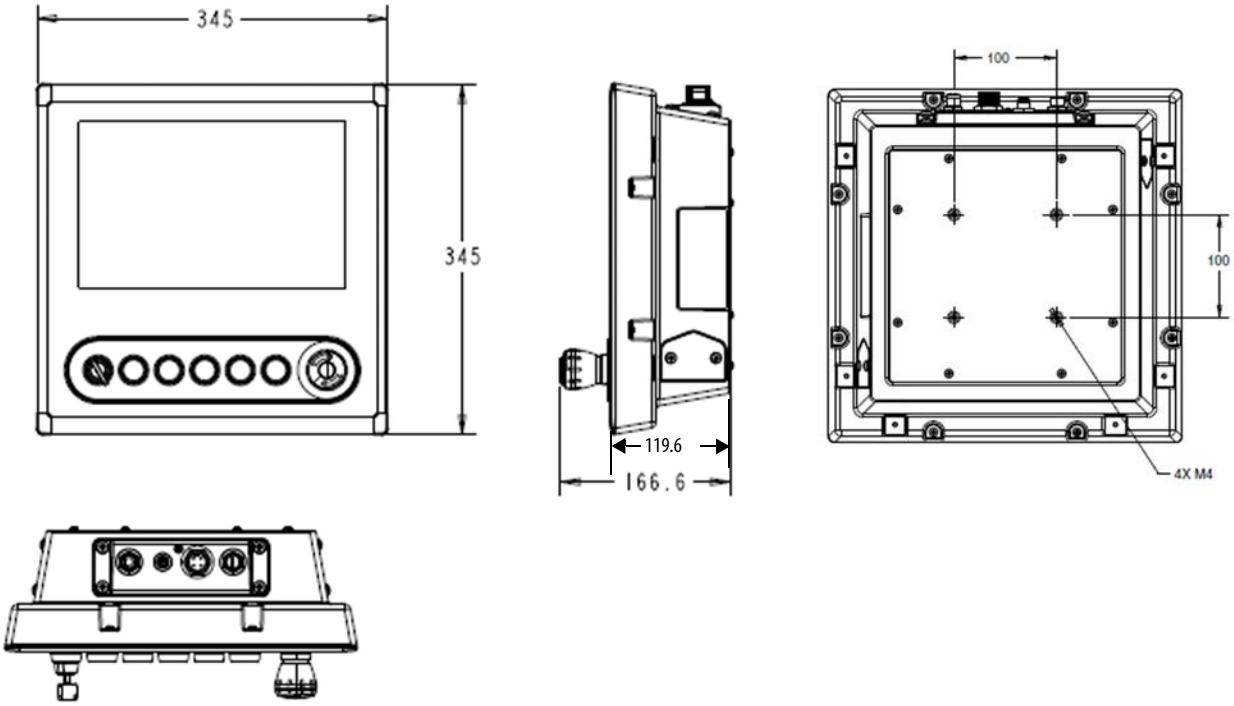

ArmorView Plus 7 Terminals

ArmorView Plus 7 Terminals	Height mm (in.)	Width mm (in.)	Overall Depth without E-stop mm (in.)	Overall Depth with E-stop mm (in.)
With Arm Adapter	381.6 (15.02)	345 (13.58)	119.6 (4.71)	166.6 (6.56)
With VESA Mount and I/O Plate	345 (13.58)	345 (13.58)	119.6 (4.71)	166.6 (6.56)

Accessories

This section describes accessories for the PanelView Plus 7 Performance terminals and the ArmorView Plus 7 terminals.

Protective Overlays

Cat. No. (1)	Display Size	Operator Input		Quantity
		Touch	Key and Touch	
2711P-RGT7SP	6.5-in.	•		3
2711P-RGB7P			•	
2711P-RGT9SP	9-in. (wide)	•		
2711P-RGT10SP	10.4-in.	•		
2711P-RGB10P			•	
2711P-RGT12SP(2)	12.1-in. (wide)	•		
2711P-RGT15SP	15-in.	•		
2711P-RGB15P			•	
2711P-RGT19P	19-in.	•		

(1) The use of protective overlays may not be compatible in all hygienic applications. Consult the standards and protocols for your hygienic applications before you use a protective overlay on a stainless steel terminal.
(2) On ArmorView Plus 7 terminals, the protective overlay covers only the touchscreen portion of the product.

Power Supplies and Power Terminal Blocks

Cat. No.	Description	Quantity
1606-XLP95E	DIN rail power supply, 24...28V DC output voltage, 95 W	1
1606-XLP100E	DIN rail power supply, 24...28V DC output voltage, 100 W	1
2711P-RSACDIN	DIN rail power supply, AC-to-DC, 85...265V AC, 47...63 Hz	1
2711P-RTBAP	3-pin AC power terminal block	10
2711P-RTBDSP	3-pin DC power terminal block	10

Mounting Hardware

Cat. No.	Description	Quantity
2711P-RMCP(1)	Mounting levers (black)	16
2711P-RTMC(2)	Mounting clips (only for stainless steel terminals)	8

(1) Catalog number 2711P-RMCP mounting levers are used with PanelView Plus 7 Performance terminals. Do not use gray mounting levers; they are not compatible with PanelView Plus 7 Performance terminals.
(2) Catalog number 2711P-RTMC mounting clips are used for stainless steel terminals, catalog numbers 2711P-T9W22D9P-BSHK or 2711P-T12W22D9P-BSHK. Note that 2711P-T12W22D9P-BSHK requires 10 mounting clips. If you need more than eight clips, order two 2711P-RTMC mounting clip kits.

Secure Digital (SD) Cards(1)

Cat. No.	Description	Quantity
1784-SD1	1 GB SD card	1
1784-SD2	2 GB SD card	1
1784-SDHC8	8 GB High Capacity SD card	1
1784-SDHC32	32 GB High Capacity SD card	1
2711C-RCSD	USB to SD adapter for SD card	1

(1) To help reduce the chance of corruption when you use SD Cards or USB drives with the terminal, Rockwell Automation recommends that you use only the above SD card catalog numbers.

Battery Replacement

Cat. No.	Description	Quantity
2711P-RY2032	Lithium coin cell battery, CR2032 equivalent	1

IMPORTANT Before you select the appropriate replacement gasket, you must identify the series of the PanelView Plus 7 Performance Stainless Steel terminal. The terminal's series information is located on the terminal's product nameplate label. In the following table, gaskets that are listed for use on Series B terminals are not certified for use on Series A terminals, and gaskets that are listed for use on Series A terminals are not certified for use on Series B terminals.

Hygienic Gasket Replacement Kits for Stainless Steel Terminals

Cat. No.	Description(1)	Terminal Series	Quantity
2711P-RGST9W	Hygienic gasket, blue silicone For 9-in. Series A Stainless Steel Terminals	A	1
2711P-RGST12W	Hygienic gasket, blue silicone For 12-in. Series A Stainless Steel Terminals	A	1
2711P-RGST9WB	Hygienic gasket, blue, silicone, with ribs For 9-in. Series B Stainless Steel Terminals	B	1
2711P-RGST12WB	Hygienic gasket, blue, silicone, with ribs For 12-in. Series B Stainless Steel Terminals	B	1

(1) Gasket material is compliant with FDA 21 CFR 177.2600.

VESA Kit for ArmorView Plus 7 Terminals

Cat. No.	Description	Quantity
2711P-RVESA01	VESA access cover, I/O plate fitted with these cables: • Power to terminal • Connection to E-stop button • Ethernet (I/O Plate to Ethernet I/O Module) • Ethernet (I/O Plate to PanelView terminal) • Ground wire Ethernet (I/O Plate to PanelView terminal)(1) M16 hole plug(2)	1

(1) For units without the Ethernet I /O module that require a DLR connection, you must remove the Ethernet I/O module cable and replace it with the Ethernet I/O module to terminal cable.
(2) For terminals that do not have an E-stop on the I/O plate, you can replace the connector with the M16 hole plug.

Handle Kit for ArmorView Plus 7 Terminals

Cat. No.	Description	Quantity
2711P-RHNDL01(1)	One-handle	1

(1) You can install one, two, or three handles to the ArmorView Plus 7 terminal. Indentations for installing the handle are located opposite the arm mount adapter (or the I/O plate), and on both sides. To install more than one handle, order multiple handle kits.

Stack Light for ArmorView Plus 7 Terminals

Cat. No.	Description	Quantity
854J-BVMC (vertical mount)(1)	Stack light	1

(1) You can install a stack light on either side of the ArmorView Plus 7 terminal. To install two stack lights, order two stack light kits.

Cables for ArmorView Plus 7 Terminals

Cat. No.	Description	Quantity
2711P-RIOIN3M	Input point cable for customer-installed switch (3-pin male Pico™ style connector for Ethernet I/O module)	1
2711P-RIOUT3M	Output point cable for customer-installed indicator light (3-pin male Pico style connector for Ethernet I/O module)	1

HMI Software

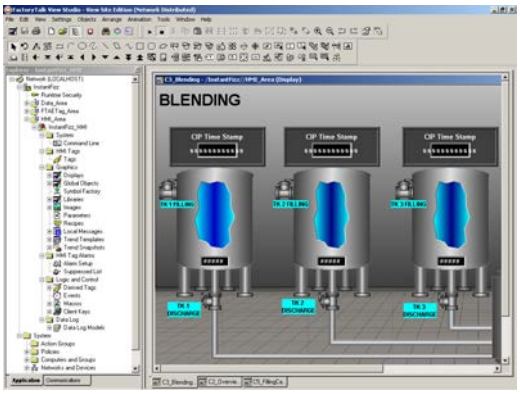

All PanelView Plus 7 terminals are configured with FactoryTalk View Studio software and have an integrated runtime system called FactoryTalk View Machine Edition Station.

Machine Edition Station runs projects that are developed with FactoryTalk View Studio software and is included on all PanelView Plus 7 terminals.

Two versions of FactoryTalk View Studio software support application development for PanelView Plus 7 terminals.

Cat. No.[1]	Description
9701-VWSTMENE	FactoryTalk View Studio for Machine Edition software - Configuration software for developing and testing machine-level human machine interface (HMI) applications. Includes RSLinx® Enterprise and KEPServer Enterprise software.
9701-VWSTENE	FactoryTalk View Studio software - Configuration software for developing and testing machine-level and supervisory-level human machine interface (HMI) applications.

(1) To order localized versions of the software, replace EN in the catalog number with DE for German, FR for French, JP for Japanese, or ZH for Chinese.

You can import PanelView Standard/PanelBuilder® 32 and PanelView applications into FactoryTalk View Studio software as Machine Edition applications by using the Machine Edition Import Wizard. The Import Wizard steps you through a few options such as scaling to a new screen resolution size, and then converts objects, text, tags, and communication configurations to ones that are available in Machine Edition.

FactoryTalk ViewPoint software, an add-on to FactoryTalk View Studio software, allows plant managers, production supervisors, system integrators, and other key personnel to view and control real-time plant floor operations remotely from a web browser. FactoryTalk ViewPoint enabled displays are fully scalable and animated in the browser. The remote user can also view displays that are not the active display of the terminal.

Each PanelView Plus 7 terminal contains one license that supports one client connection to the terminal. No additional software is required.

For a complete list of available HMI software, visit http://www.rockwellautomation.com/rockwellsoftware.

Additional Resources

These documents contain more information about related products from Rockwell Automation.

Resource	Description
PanelView Plus 7 Performance Terminals User Manual, publication 2711P-UM008	Provides instructions on how to install, configure, and operate the PanelView Plus 7 Performance terminals.
ArmorView Plus 7 Installation Instructions, publication 2711P-IN013	Provides instructions on how to install the ArmorView Plus 7 components.
Industrial Automation Wiring and Grounding Guidelines, publication 1770-4.1	Provides general guidelines on how to install a Rockwell Automation industrial system.
Product Certifications website, http://www.rockwellautomation.com/global/certification/overview.page	Provides declarations of conformity, certificates, and other certification details.

You can view or download publications at rok.auto/literature.

Rockwell Automation Support

Use these resources to access support information.

Technical Support Center	Find help with how-to videos, FAQs, chat, user forums, and product notification updates.	rok.auto/support
Knowledgebase	Access Knowledgebase articles.	rok.auto/knowledgebase
Local Technical Support Phone Numbers	Locate the telephone number for your country.	rok.auto/phonesupport
Literature Library	Find installation instructions, manuals, brochures, and technical data publications.	rok.auto/literature
Product Compatibility and Download Center (PCDC)	Download firmware, associated files (such as AOP, EDS, and DTM), and access product release notes.	rok.auto/pcdc

Documentation Feedback

Your comments help us serve your documentation needs better. If you have any suggestions on how to improve our content, complete the form at rok.auto/docfeedback.

Allen-Bradley, ArmorView, CompactLogix, ControlLogix, expanding human possibility, FactoryTalk, PanelBuilder, PanelView, Pico, Rockwell Automation, and RSLinx are trademarks of Rockwell Automation, Inc.

EtherNet/IP is a trademark of ODVA, Inc.

Microsoft is a trademark of Microsoft Corporation.

SD and SDHC are trademarks of SD-3C LLC.

Trademarks not belonging to Rockwell Automation are property of their respective companies.

Rockwell Automation maintains current product environmental compliance information on its website at rok.auto/pec.

Rockwell Otomasyon Ticaret A.Ş. Kar Plaza İş Merkezi E Blok Kat:6 34752, İçerenköy, İstanbul, Tel: +90 (216) 5698400 EEE Yönetmeliğine Uygundur

Connect with us.

rockwellautomation.com — expanding **human possibility**™

AMERICAS: Rockwell Automation, 1201 South Second Street, Milwaukee, WI 53204-2496 USA, Tel: (1) 414.382.2000, Fax: (1) 414.382.4444
EUROPE/MIDDLE EAST/AFRICA: Rockwell Automation NV, Pegasus Park, De Kleetlaan 12a, 1831 Diegem, Belgium, Tel: (32) 2 663 0600, Fax: (32) 2 663 0640
ASIA PACIFIC: Rockwell Automation, Level 14, Core F, Cyberport 3, 100 Cyberport Road, Hong Kong, Tel: (852) 2887 4788, Fax: (852) 2508 1846

Publication 2711P-TD009K-EN-P - February 2021
Supersedes Publication 2711P-TD009J-EN-P - October 2020

Copyright © 2021 Rockwell Automation, Inc. All rights reserved. Printed in the U.S.A.