Technical Data

Original Instructions

Stratix Ethernet Device Specifications

Stratix® 2000 Switches (1783-US), Stratix 2500 Switches (1783-LMS), Stratix 6000 Switches (1783-EMS)

Stratix 4300 Remote Access Routers (1783-RA2TGB, 1783-RA5TGB)

Stratix 5400 Switches (1783-HMS), Stratix 5410 Switches (1783-IMS), Stratix 5700 Switches (1783-BMS)

ArmorStratix™ 5700 Switches (1783-ZMS), Stratix 8000 and 8300 Switches (1783-MS, 1783-RMS, 1783-MX)

Stratix 5800 Switches (1783-MMS, 1783-MMX)

Stratix 5100 Wireless Access Point/Workgroup Bridge (1783-WAP), Stratix 5900 Services Router (1783-SR)

Stratix 5950 Security Appliance (1783-SAD), Embedded Switch Technology (1783-ETAP), Configurable NAT Router (1783-NATR), CIP Security Proxy (1783-CSP)

Topic	Page
Summary of Changes	2
Stratix 2000 Ethernet Unmanaged Switches—Series B	3
Stratix 2000 Ethernet Unmanaged Switches—Series A	9
Stratix 2500 Ethernet Lightly Managed Switches	16
Stratix 4300 Remote Access Routers	20
Stratix 5400 Ethernet Managed Switches	23
Stratix 5410 Ethernet Managed Switches	28
Stratix 5700 Ethernet Managed Switches	34
Stratix 5700 PoE Switches	37
ArmorStratix 5700 Ethernet Managed Switches	43
Stratix 5800 Ethernet Managed Switches and Expansion Modules	48
Stratix 6000 Ethernet Managed Switches	56
Stratix 8000 and 8300 Ethernet Managed Switches	59
Stratix 5100 Wireless Access Point/Workgroup Bridge	65
Stratix 5900 Services Router	66
Stratix 5950 Security Appliance	68
Embedded Switch Technology	72
Configurable NAT Router	75
CIP Security Proxy	78
Accessories	81
Additional Resources	85

Summary of Changes

This publication contains the following new or updated information. This list includes substantive updates only and is not intended to reflect all changes.

Topic	Page
Added CCC, UKCA, and UKEX Certifications	5, 17, 26, 31, 45, 52, 71

Stratix 2000 Ethernet Unmanaged Switches—Series B

Cat. No.	Total Ports	RJ45 Ports(1)	SFP Ports(1)
1783-US5T/B	5	5 FE	—
1783-US5TG/B	5	5 GE	—
1783-US4T1F/B	5	4 FE	1 FE multimode preinstalled fiber SFP module
1783-US4T1H/B	5	4 FE	1 FE singlemode preinstalled fiber SFP module
1783-US8T/B	8	8 FE	—
1783-US6T2F/B	8	6 FE	2 FE multimode preinstalled fiber SFP modules
1783-US6T2H/B	8	6 FE	2 FE singlemode preinstalled fiber SFP modules
1783-US7T1F/B	8	7 FE	1 FE multimode preinstalled fiber SFP module
1783-US7T1H/B	8	7 FE	1 FE singlemode preinstalled fiber SFP module
1783-US6T2TG2F/B	10	6 FE + 2 GE	2 FE multimode preinstalled fiber SFP modules
1783-US6T2TG2H/B	10	6 FE + 2 GE	2 FE singlemode preinstalled fiber SFP modules
1783-US8TG2GX/B	10	8 GE	2 GE slots(2)
1783-US16T/B	16	16 FE	—
1783-US16T2S/B	18	16 FE	2 FE slots(2)

(1) FE = Fast Ethernet; GE = Gigabit Ethernet.
(2) SFP modules must be ordered separately.

The preinstalled fiber SFP modules that are listed in the SFP Ports column use the LC connector type.

Table 1 - Technical Specifications - Stratix 2000 Switches, Series B

Attribute	1783-US5T/B	1783-US5TG/B	1783-US4T1F/B, 1783-US4T1H/B	1783-US8T/B	1783-US6T2F/B, 1783-US6T2H/B, 1783-US7T1F/B, 1783-US7T1H/B	1783-US6T2TG2F/B, 1783-US6T2TG2H/B	1783-US8TG2GX/B	1783-US16T/B	1783-US16T2S/B
Inrush current, max	1.85 A	0.33 A	1.69 A	1.31 A	0.41 A	1.83 A	0.55 A	0.47 A	1.63 A
Power input	24V (12...48V DC, 18...30V AC, 50/60 Hz), SELV								
Power consumption, max	3.4 W	4.5 W	3.4 W	4.6 W	4.6 W	7.5 W	10 W	8.0 W	8.0 W
Current, nom	DC 180 mA AC 360 mA	DC 250 mA AC 500 mA	DC 180 mA AC 360 mA	DC 250 mA AC 500 mA	DC 250 mA AC 500 mA	DC 450 mA AC 900 mA	DC 550 mA AC 1100 mA	DC 430 mA AC 860 mA	DC 430 mA AC 860 mA
Current, max	DC 380 mA AC 750 mA	DC 510 mA AC 1020 mA	DC 380 mA AC 750 mA	DC 510 mA AC 1100 mA	DC 510 mA AC 1100 mA	DC 850 mA AC 1700 mA	DC 1100 mA AC 2200 mA	DC 900 mA ~AC 1800 mA	DC 900 mA AC 1800 mA
Wire size, ground connection	2.5 mm^2 (14 AWG) copper wire suitable for 86 °C (187 °F) above surrounding ambient temperature outside the enclosure, with a suitable ring terminal								
Wire size, DC power connection	4...0.25 mm^2 (12...24 AWG) twisted-pair copper wire suitable for 86 °C (187 °F) above surrounding ambient temperature outside the enclosure								
Screw torque, ground terminal, max	0.91 N•m (8.05 in•lb)								
Screw torque, power terminals	0.50...0.56 N•m (4.5...5.0 in•lb)								
Enclosure type rating	None (open-style)								
North American temp code	T4	T4A	T5	T4	T4	T4	T4	T5	
ATEX temp code	T4	T4	T4	T4	T4	T4	T4	T4	

Table 1 - Technical Specifications - Stratix 2000 Switches, Series B (Continued)

Attribute	1783-US5T/B	1783-US5TG/B	1783-US4T1F/B, 1783-US4T1H/B	1783-US8T/B	1783-US6T2F/B, 1783-US6T2H/B, 1783-US7T1F/B, 1783-US7T1H/B	1783-US6T2TG2F/B, 1783-US6T2TG2H/B	1783-US8TG2GX/B	1783-US16T/B	1783-US16T2S/B
IECEx temp code	T4	T4	T4	T4	T4	T4	T4	T4	
MAC addresses, max supported	2 K	8 K	2 K	2 k	2 K	8 K	8 K	8 K	
SFP modules(1)	No SFP slots	No SFP slots	Preinstalled	No SFP slots	Preinstalled	Preinstalled	Ordered separately: 1783-SFP1GSX 1783-SFP1GLX 1783-SFP1GEXE 1783-SFP1GZX	No SFP slots	Ordered separately: 1783-SFP100FX 1783-SFP100LX 1783-SFP100EXC 1783-SFP100ZXC

(1) For specifications of preinstalled SFP modules, see Table 2. For specifications of SFP modules ordered separately, see Table 64.

Table 2 - Preinstalled SFP Module Specifications - Stratix 2000 Switches

Attribute	Multimode (100Base-FX)	Singlemode (100Base-LX)
Central wavelength (nm)	1310	1310
Transmission distance (km)	2	20
Applicable distance (km)	0...2	0...20
Luminous power, min (db)	-19	-10
Luminous power, max (db)	-10	-5
Receiving sensitivity (dBm)	-31	-34
Overload luminous power	-3	-3

Table 3 - Environmental Specifications - Stratix 2000 Switches, Series B

Attribute	1783-US5T/B, 1783-US8T/B	1783-US5TG/B, 1783-US4T1F/B, 1783-US4T1H/B, 1783-US6T2F/B, 1783-US6T2H/B, 1783-US7T1F/B, 1783-US7T1H/B, 1783-US6T2TG2F/B, 1783-US6T2TG2H/B, 1783-US8TG2GX/B, 1783-US16T/B, 1783-US16T2S/B
Temperature, operating IEC 60068-2-1 (Test Ad, Operating Cold), IEC 60068-2-2 (Test Bd, Operating Dry Heat), IEC 60068-2-14 (Test Nb, Operating Thermal Shock)	-10 °C < Ta < +60 °C (14 °F < Ta < +140 °F)	-40 °C < Ta < +75 °C (-40 °F < Ta < +167 °F)
Temperature, ambient, max	60 °C (140 °F)	75 °C (167 °F)
Temperature, surrounding air, max	60 °C (140 °F)	75 °C (167 °F)
Temperature, nonoperating IEC 60068-2-1 (Test Ab, Unpackaged Nonoperating Cold) IEC 60068-2-2 (Test Bb, Unpackaged Nonoperating Dry Heat) IEC 60068-2-14 (Test Na, Unpackaged Nonoperating Thermal Shock)	-40...+85 °C (-40...+185 °F)	
Relative humidity IEC 60068-2-30 (Test Db, Unpackaged Damp Heat)	5...95% noncondensing	
Vibration IEC 60068-2-6 (Test Fc, Operating)	2 g @ 10...500 Hz	
Shock, operating IEC 60068-2-27 (Test Ea, Unpackaged Shock)	15 g	
Shock, nonoperating IEC 60068-2-27 (Test Ea, Unpackaged Shock)	30 g	
Emissions CISPR11 (IEC 61000-6-4)	IEC 61000-6-4	
ESD immunity IEC 61000-4-2	6 kV contact discharges 8 kV air discharges	
Radiated RF immunity IEC 61000-4-3	10V/m with 1 kHz sine-wave 80% AM from 80...2000 MHz 20V/m with 200 Hz 50% Pulse 100% AM at 1890 MHz 3V/m with 1 kHz sine-wave 80% AM from 2000...2700 MHz	
EFT/B immunity IEC 61000-4-4	±4 kV at 5 kHz on power ports ±2 kV at 5 kHz on communication ports	
Surge transient immunity IEC 61000-4-5	±2 kV line-line (DM) and ±4 kV line-earth (CM) on power ports ±2 kV line-earth (CM) on communication ports	
Conducted RF immunity IEC 61000-4-6	10V rms with 1 kHz sine-wave 80% AM from 150 kHz...80 MHz	
Environmental rating	IP30	

Table 4 - Certifications - Stratix 2000 Switches, Series B

Certifications (when product is marked)[1]	1783-US5T/B, 1783-US8T/B	1783-US6T2TG2F/B, 1783-US16T/B	1783-US5TG/B, 1783-US4T1F/B, 1783-US4T1H/B, 1783-US6T2F/B, 1783-US6T2H/B, 1783-US7T1F/B, 1783-US7T1H/B, 1783-US6T2TG2H/B, 1783-US8TG2GX/B, 1783-US16T2S/B
c-UL-us	UL Listed Industrial Control Equipment, certified for US and Canada. See UL File E65584. UL Listed for Class I, Division 2 Group A,B,C,D Hazardous Locations, certified for U.S. and Canada. See UL File E194810.		
CCC	CCC 2022122310115853, 2020122310113906, 2020122310113907 CNCA-C23-01 强制性产品认证实施规则 防爆电气 CNCA-C23-01 CCC Implementation Rule Explosion-Proof Electrical Products	CCC 2022122310115853, 2020122310113906 CNCA-C23-01 强制性产品认证实施规则 防爆电气 CNCA-C23-01 CCC Implementation Rule Explosion-Proof Electrical Products	
CE	European Union 2014/30/EU EMC Directive, compliant with: EN 61326-1; Meas./Control/Lab., Industrial Requirements EN 61000-6-2; Industrial Immunity EN 61000-6-4; Industrial Emissions EN 61131-2; Programmable Controllers (Clause 8, Zone A & B) European Union 2011/65/EU RoHS, compliant with: EN 50581; Technical documentation		
RCM	Australian Radiocommunications Act, compliant with: AS/NZS CISPR 11; Industrial Emissions		

Table 4 - Certifications - Stratix 2000 Switches, Series B

Certifications (when product is marked)(1)	1783-US5T/B, 1783-US8T/B	1783-US6T2TG2F/B, 1783-US16T/B	1783-US5TG/B, 1783-US4T1F/B, 1783-US4T1H/B, 1783-US6T2F/B, 1783-US6T2H/B, 1783-US7T1F/B, 1783-US7T1H/B, 1783-US6T2TG2H/B, 1783-US8TG2GX/B, 1783-US16T2S/B
Ex	UK Statutory Instrument 2016 No. 1107 and European Union 2014/34/EU ATEX Directive, compliant with: • EN IEC 60079-0; General Requirements • EN IEC 60079-7; Explosive Atmospheres, Protection "e" • II 3 G Ex ec IIC T5 Gc • DEMKO 16 ATEX 1816X, UL22UKEX2688X	UK Statutory Instrument 2016 No. 1107 and European Union 2014/34/EU ATEX Directive, compliant with: • EN 60079-0; General Requirements • EN IEC 60079-7; Explosive Atmospheres, Protection "e" • II 3 G Ex ec IIC T4 Gc • DEMKO 16 ATEX 1816X, UL22UKEX2688X	
IECEx	IECEx System, compliant with: • IEC 60079-0; General Requirements • IEC 60079-15; Potentially Explosive Atmospheres, Protection "n" • II 3 G Ex ec IIC T5 Gc • IECEx UL 16.0169X	IECEx System, compliant with: • IEC 60079-0; General Requirements • IEC 60079-15; Potentially Explosive Atmospheres, Protection "n" • II 3 G Ex ec IIC T4 Gc • IECEx UL 16.0169X	
UKCA	In conformity with the following UK Statutory Instruments and their amendments: • 2016 No. 1091 – Electromagnetic Compatibility Regulations • 2016 No. 1101 – Electrical Equipment (Safety) Regulations • 2016 No. 1107 – Equipment and Protective Systems Intended for Use in Potentially Explosive Atmospheres Regulations • 2012 No. 3032 – Restriction of the Use of Certain Hazardous Substances in Electrical and Electronic Equipment Regulations		
KC	Korean Certification of Broadcasting and Communications Equipment, compliant with: • Framework Act on Telecommunications and Radio Waves Act		
EAC	Russian Customs Union TR CU 020/2011 EMC Technical Regulation		
EtherNet/IP™	ODVA conformance tested to EtherNet/IP specifications		
BSMI	CNS 13438 (95); CNS14336-1 (99) Taiwan		–

(1) See the Product Certification link at http://www.ab.com for Declarations of Conformity, Certificates, and other certification details.

Dimensions—Stratix 2000 Switches, Series B

Figure 1 - 1783-US5T/B, 1783-US5TG/B, 1783-US4T1F/B, 1783-US4T1H/B

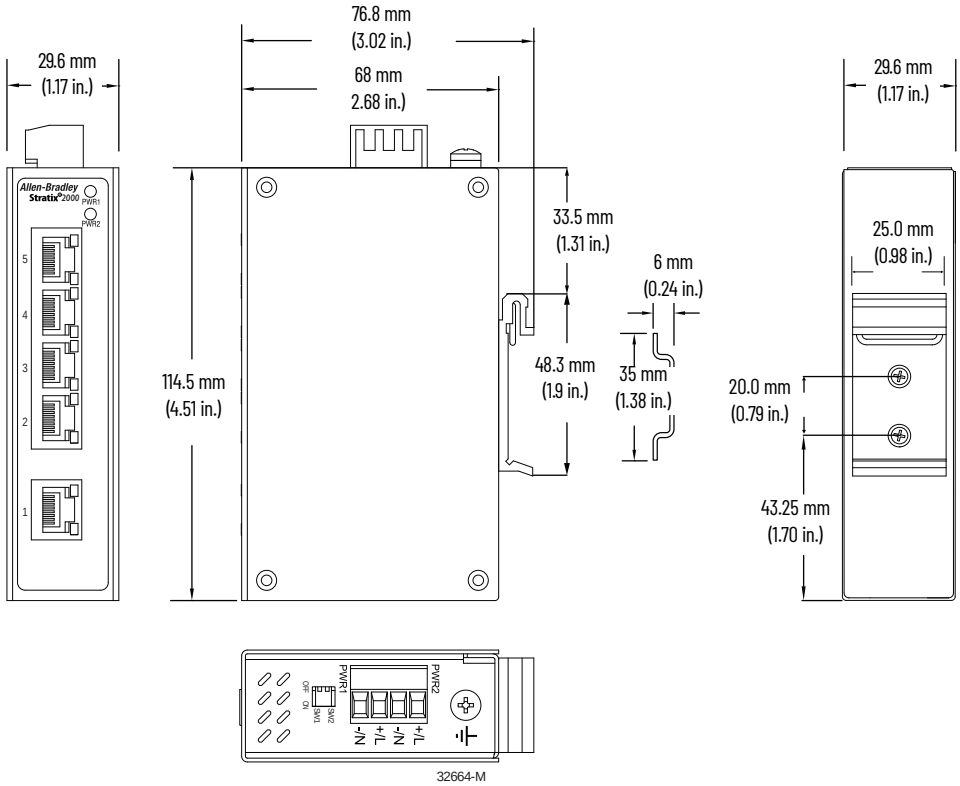

Figure 2 - 1783-US8T/B, 1783-US6T2F/B, 1783-US6T2H/B, 1783-US7T1F/B, 1783-US7T1H/B

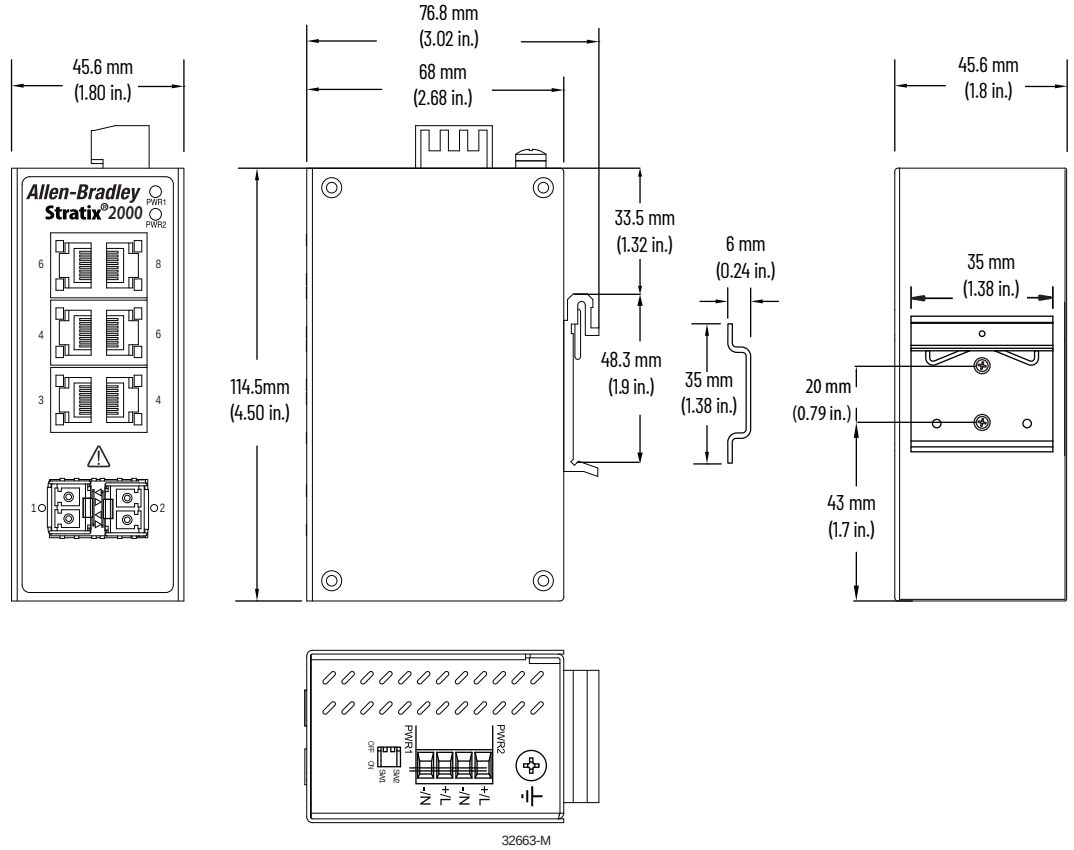

Figure 3 - 1783-US6T2TG2F/B, 1783-US6T2TG2H/B, 1783-US8TG2GX/B

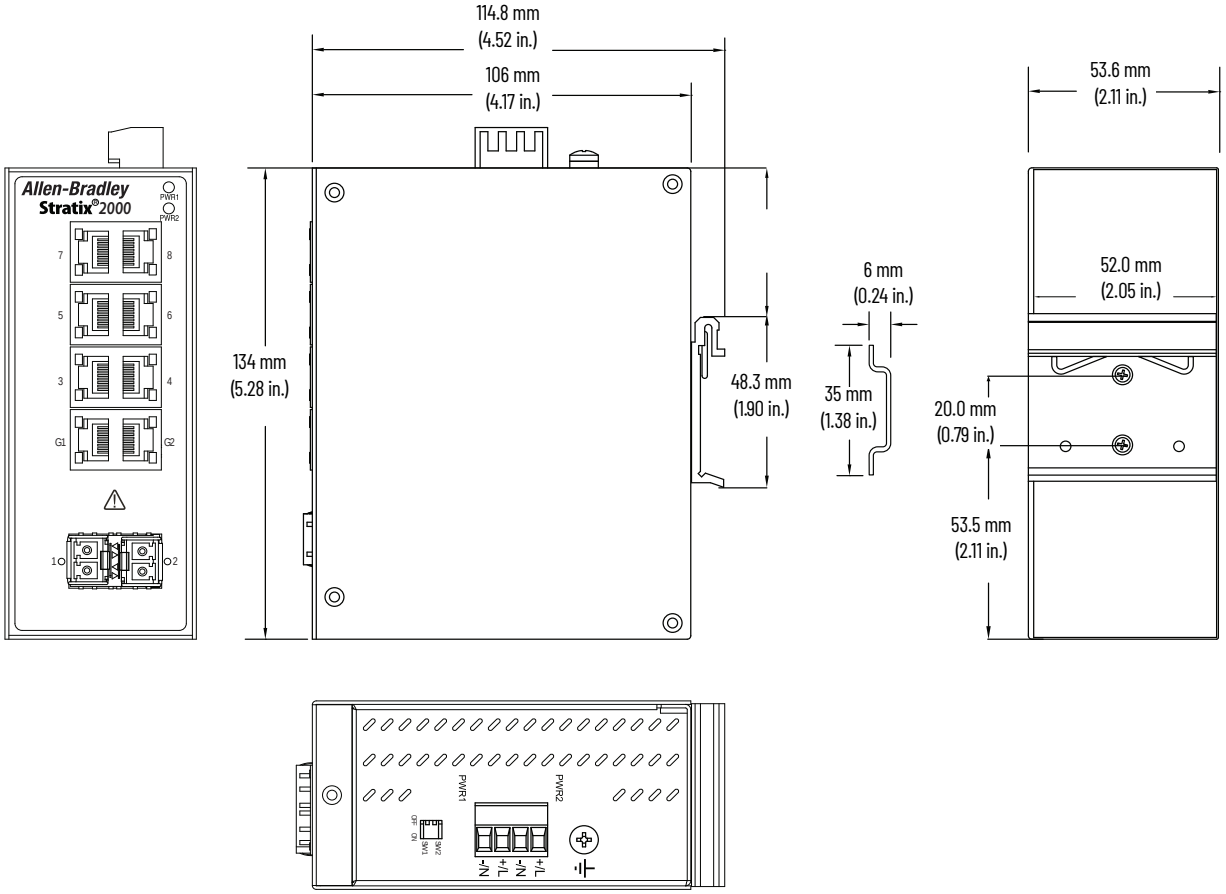

Figure 4 - 1783-US16T/B, 1783-US16T2S/B

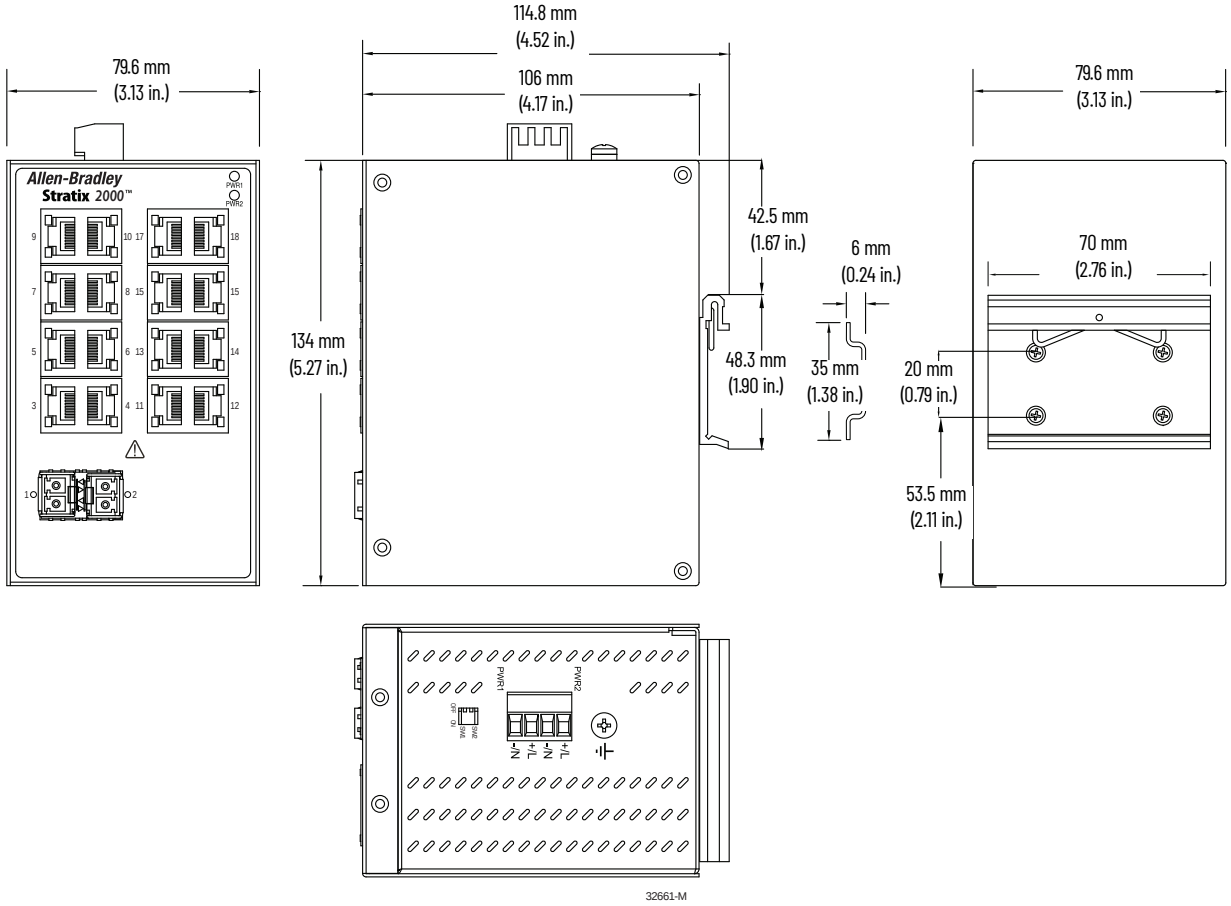

Stratix 2000 Ethernet Unmanaged Switches—Series A

Cat. No.	Total Ports	RJ45 Ports(1)	Combo Ports(1)	SFP Ports(1)
1783-US4T1F/A	5	4 FE	—	1 FE multimode preinstalled fiber SFP module
1783-US4T1H/A	5	4 FE	—	1 FE singlemode preinstalled fiber SFP module
1783-US5T/A	5	5 FE	—	—
1783-US5TG/A	5	5 GE	—	—
1783-US6T2F/A	8	6 FE	—	2 FE multimode preinstalled fiber SFP modules
1783-US6T2H/A	8	6 FE	—	2 FE singlemode preinstalled fiber SFP modules
1783-US6TG2CG/A	8	6 GE	2 GE(2)	—
1783-US7T1F/A	8	7 FE	—	1 FE multimode preinstalled fiber SFP module
1783-US7T1H/A	8	7 FE	—	1 FE singlemode preinstalled fiber SFP module
1783-US8T/A	8	8 FE	—	—
1783-US14T2S/A	16	14 FE	—	2 FE(2)
1783-US16T/A	16	16 FE	—	—
1783-US16TA/A	16	16 FE	—	—

(1) FE = Fast Ethernet; GE = Gigabit Ethernet.
(2) SFP modules must be ordered separately.

The following table lists Stratix 2000 series A switches and their series B replacements. For specifications of series B switches, see page 3.

Table 5 - Stratix 2000 Series Change

Series A Cat. No.	Series B Replacement Cat. No.	Change(1)
1783-US4T1F/A	1783-US4T1F/B	Same catalog number and configuration
1783-US4T1H/A	1783-US4T1H/B	Same catalog number and configuration
1783-US5T/A	1783-US5T/B	Same catalog number and configuration
1783-US5TG/A	1783-US5TG/B	Same catalog number and configuration
1783-US6T2F/A	1783-US6T2F/B	Same catalog number and configuration
1783-US6T2H/A	1783-US6T2H/B	Same catalog number and configuration
1783-US7T1F/A	1783-US7T1F/B	Same catalog number and configuration
1783-US7T1H/A	1783-US7T1H/B	Same catalog number and configuration
1783-US8T/A	1783-US8T/B	Same catalog number and configuration
1783-US16T/A	1783-US16T/B	Same catalog number and configuration
1783-US14T2S/A	1783-US16T2S/B	New catalog number Replaced 2 GE combo ports with 2 GE copper ports on series B replacement Added 2 GE SFP slots to series B replacement
1783-US6TG2CG/A	1783-US8TG2GX/B	New catalog number Added 2 FE copper ports to series B replacement

(1) FE = Fast Ethernet; GE = Gigabit Ethernet.

Technical Specifications - Stratix 2000 Switches, Series A

Attribute	1783-US4T1F/A 1783-US4T1H/A	1783-US5TG/A	1783-US6T2F/A 1783-US6T2H/A	1783-US7T1F/A 1783-US7T1H/A	1783-US6TG2CG/A
Inrush current, max	0.11 A	0.25 A	0.86 A	1.06 A	0.66 A
Power input	24V (18...60V DC, 18...30V AC 50/60 Hz), Class 2/SELV				
Current rating	230.5 mA	432.1 mA	442.3 mA		1242.7 mA
Power dissipation, max	2.841 W	5.491 W	5.927 W		13.643 W
Isolation voltage	30V (continuous), basic insulation type, power to network channels No isolation between individual network channels Type tested at 500V AC for 60 s				
Wire size, Ethernet connection(1)	RJ45 connector according to IEC 60603-7, 2-pair or 4-pair Category 5e minimum cable according to TIA 568-B.1 or Category 5 cable according to ISO/IEC 24702 rated 82 °C (180 °F) min				

(Continued)Technical Specifications - Stratix 2000 Switches, Series A (Continued)

Attribute	1783-US4T1F/A 1783-US4T1H/A	1783-US5TG/A	1783-US6T2F/A 1783-US6T2H/A	1783-US7T1F/A 1783-US7T1H/A	1783-US6TG2CG/A
Wire size, DC power connection	0.82...2.5 mm^2 (18...14 AWG) twisted-pair copper wire suitable for 82 °C (180 °F) above surrounding ambient temperature outside the enclosure				
Wire size, ground connection	2.5 mm^2 (14 AWG) copper wire suitable for 82 °C (180 °F) above surrounding ambient temperature outside the enclosure, with a suitable ring terminal				
Screw torque, ground terminal, max	1.82 N•m (16 in•lb)				
Screw torque, power terminals	0.4...0.5 N•m (3.5...4.4 in•lb)				
Wiring category(2)	1 - on power ports 2 - on communication ports				
Enclosure type rating	None (open-style)				
North American temp code	T4				
IEC temp code	T4				
MAC addresses, max supported	1 K	1K	8 K		8 K
SFP modules(3)	Preinstalled	No SFP slots	Preinstalled	Preinstalled	Ordered separately: 1783-SFP1GSX 1783-SFP1GLX 1783-SFP1GEXE 1783-SFP1GZX

(1) See page 83 for recommended products.
(2) Use this conductor category information for planning conductor routing. Refer to Industrial Automation Wiring and Grounding Guidelines, publication 1770-4.1.
(3) For specifications of preinstalled SFP modules, see Table 6. For specifications of SFP modules ordered separately, see Table 64.

(Continued) Table 6 - Technical Specifications - Stratix 2000 Switches, Series A

Attribute	1783-US14T2S/A	1783-US16T/A 1783-US16TA/A	1783-US5T/A	1783-US8T/A
Inrush current, max	4.34 A	4.72 A	0.11 A	1.47 A
Power input				
Current rating	663.2 mA	555.5 mA	250 mA	361 mA
Power dissipation, max	7.991 W	6.72 W	2 W @ 24V AC/DC	4.04 W @ 24V AC/DC
Isolation voltage				
Wire size, Ethernet connection(1)			RJ45 connector according to IEC 60603-7, 2-pair or 4-pair Category 5e minimum cable according to TIA 568-B.1 or Category 5 cable according to ISO/IEC 24702	
Wire size, DC power connection			0.75...2.5 mm^2 (18...14 AWG) twisted-pair copper wire suitable for 30 °C (86 °F) above surrounding ambient temperature outside the enclosure	
Wire size, ground connection			2.5 mm^2 (14 AWG) copper wire suitable for 30 °C (86 °F) above surrounding ambient temperature outside the enclosure, with a suitable ring terminal	
Screw torque, ground terminal, max				
Screw torque, power terminals				
Wiring category(2)				
Enclosure type rating				
North American temp code			T5	
IEC temp code			T5	
MAC addresses, max supported	8 K	8 K	1K	8 K
SFP modules(3)	Ordered separately: 1783-SFP100FX 1783-SFP100LX 1783-SFP100EXC 1783-SFP100ZXC	No SFP slots	No SFP slots	No SFP slots

(1) See page 83 for recommended products.
(2) Use this conductor category information for planning conductor routing. Refer to Industrial Automation Wiring and Grounding Guidelines, publication 1770-4.1.
(3) For specifications of preinstalled SFP modules, see Table 6. For specifications of SFP modules ordered separately, see Table 64.

Table 6 - Preinstalled SFP Module Specifications - Stratix 2000 Switches

Attribute	Multimode (100Base-FX)	Singlemode (100Base-LX)
Central wavelength (nm)	1310	1310
Transmission distance (km)	2	20
Applicable distance (km)	0...2	0...20
Luminous power, min (db)	-19	-10
Luminous power, max (db)	-10	-5
Receiving sensitivity (dBm)	-31	-34
Overload luminous power	-3	-3

Table 7 - Environmental Specifications - Stratix 2000 Switches, Series A

Attribute	1783-US4T1F/A, 1783-US4T1H/A, 1784-US5TG/A, 1783-US6T2F/A, 1783-US6T2H/A, 1783-US6TG2CG/A, 1783-US7T1F/A, 1783-US7T1H/A, 1783-US14T2S/A, 1783-US16T/A	1783-US5T/A	1783-US8T/A
Temperature, operating IEC 60068-2-1 (Test Ad, Operating Cold), IEC 60068-2-2 (Test Bd, Operating Dry Heat), IEC 60068-2-14 (Test Nb, Operating Thermal Shock)	-40...+70 °C (-40...+158 °F)	0...+60 °C (32...+140 °F)	
Temperature, surrounding air, max	70 °C (158 °F)	60 °C (140 °F)	
Temperature, nonoperating IEC 60068-2-1 (Test Ab, Unpackaged Nonoperating Cold) IEC 60068-2-2 (Test Bb, Unpackaged Nonoperating Dry Heat) IEC 60068-2-14 (Test Na, Unpackaged Nonoperating Thermal Shock)	-40...+85 °C (-40...+185 °F)		
Relative humidity IEC 60068-2-30 (Test Db, Unpackaged Damp Heat)	5...95% noncondensing		
Vibration IEC 60068-2-6 (Test Fc, Operating)	2 g @ 10...150 Hz		2 g @ 10...500 Hz
Operating shock IEC 60068-2-27 (Test Ea, Unpackaged Shock)	15 g		
Nonoperating shock IEC 60068-2-27 (Test Ea, Unpackaged Shock)	30 g		
Emissions CISPR11 (IEC 61000-6-4)	Class A		
ESD immunity IEC 61000-4-2	8 kV contact discharges 15 kV air discharges		6 kV contact discharges 8 kV air discharges
Radiated RF immunity IEC 61000-4-3	10V/m with 1 kHz sine-wave 80% AM from 80...2000 MHz 3V/m with 1 kHz sine-wave 80% AM from 2000...2700 MHz		
EFT/B immunity IEC 61000-4-4	±4 kV at 5 kHz on power ports ±3 kV at 5 kHz on communication ports		
Surge transient immunity IEC 61000-4-5	±2 kV line-line (DM) and ±4 kV line-earth (CM) on DC power ports ±2 kV line-earth (CM) on communication port		
Conducted RF immunity IEC 61000-4-6	10V rms with 1 kHz sine-wave 80% AM from 150 kHz...80 MHz		
Magnetic field immunity IEC 61000-4-8	30 A/m long duration and 300 A/m short duration at 50 Hz		
Magnetic pulse immunity IEC 61000-4-9	—		30 A/m pulse
Environmental rating	IP20		

Table 8 - Certifications- Stratix 2000 Switches, Series A

Certifications (when product is marked)(1)	1783-US4T1F/A, 1783-US4T1H/A, 1784-US5TG/A, 1783-US6T2F/A, 1783-US6T2H/A, 1783-US6TG2CG/A, 1783-US7T1F/A, 1783-US7T1H/A, 1783-US14T2S/A, 1783-US16T/A, 1783-US16TA/A	1783-US5T/A, 1783-US8T/A
c-UL-us	UL Listed for Class I, Division 2 Group A,B,C,D Hazardous Locations, certified for U.S. and Canada. See UL File E194810.	UL Listed Industrial Control Equipment, certified for US and Canada. See UL File E65584. UL Listed for Class I, Division 2 Group A,B,C,D Hazardous Locations, certified for U.S. and Canada. See UL File E194810.
CE	European Union 2004/108/EC EMC Directive, compliant with: EN 61326-1; Meas./Control/Lab., Industrial Requirements EN 61000-6-2; Industrial Immunity EN 61000-6-4; Industrial Emissions EN 61131-2; Programmable Controllers (Clause 8, Zone A & B) European Union 2011/65/EU RoHS, compliant with: EN 50581; Technical Documentation	
RCM	Australian Radiocommunications Act, compliant with: EN 61000-6.4; Industrial Emissions	
Ex	European Union 94/9/EC ATEX Directive, compliant with: EN 60079-15; Potentially Explosive Atmospheres, Protection “n” EN 60079-0; General Requirements II 3 G Ex nA IIC T4 Gc X	European Union 94/9/EC ATEX Directive, compliant with: EN 60079-15; Potentially Explosive Atmospheres, Protection “n” EN 60079-0; General Requirements II 3 G Ex nA IIC T5 Gc
KC	Korean Registration of Broadcasting and Communications Equipment, compliant with: Article 58-2 of Radio Waves Act, Clause 3	

(1) See the Product Certification link at http://www.ab.com for Declarations of Conformity, Certificates, and other certification details.

Dimensions—Stratix 2000 Switches, Series A

Figure 5 - 1783-US4T1F/A, 1783-US4T1H/A,1783-US5TG/A Switch Dimensions

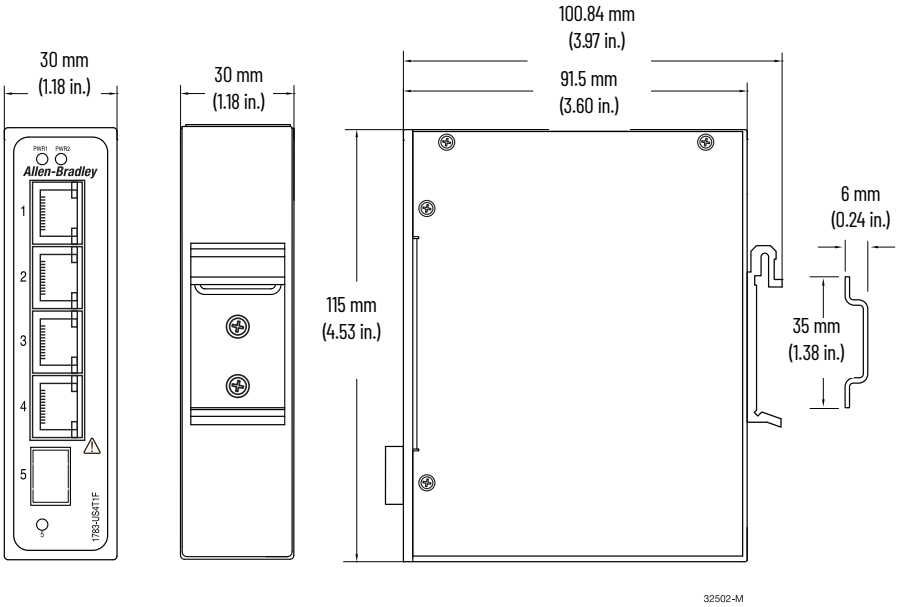

Figure 6 - 1783-US5T/A Switch Dimensions

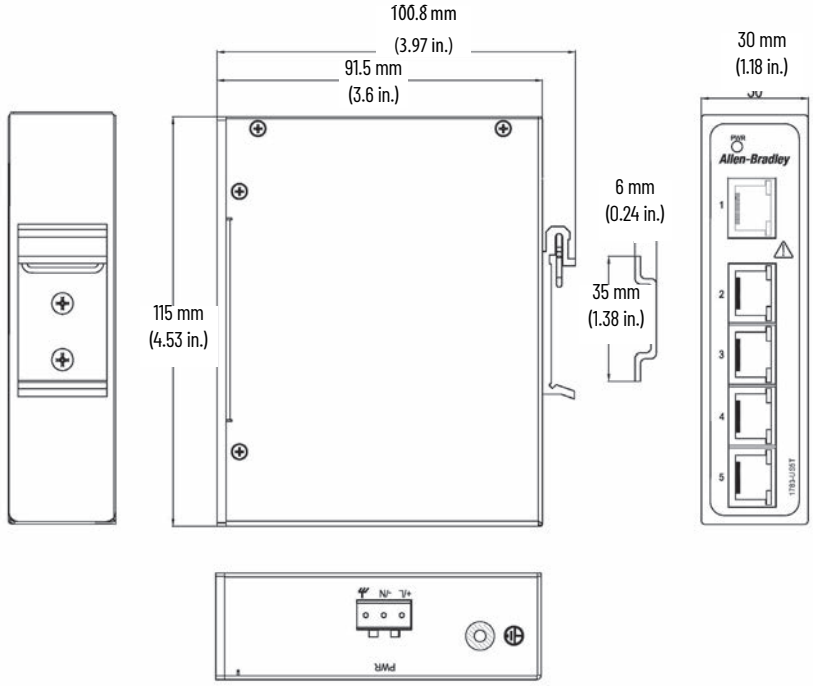

Figure 7 - 1783-US6T2F/A, 1783-US6T2H/A, 1783-US7T1F/A, 1783-US7T1H/A Switch Dimensions

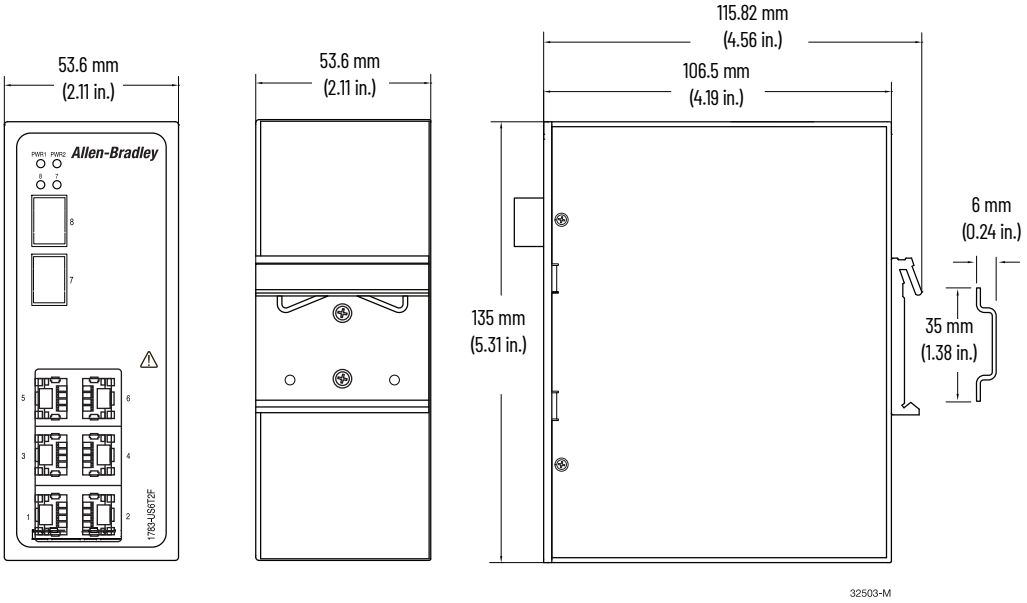

Figure 8 - 1783-US8T/A Switch Dimensions

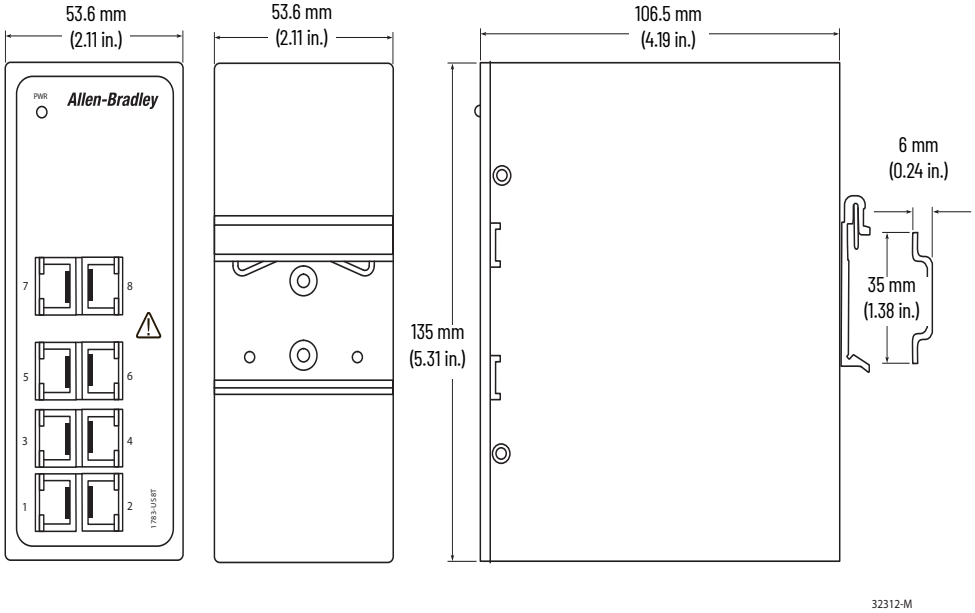

Figure 9 - 1783-US16T/A, 1783-US16TA/A, 1783-US14T2S/A, 1783-US6TG2CG/A Switch Dimensions

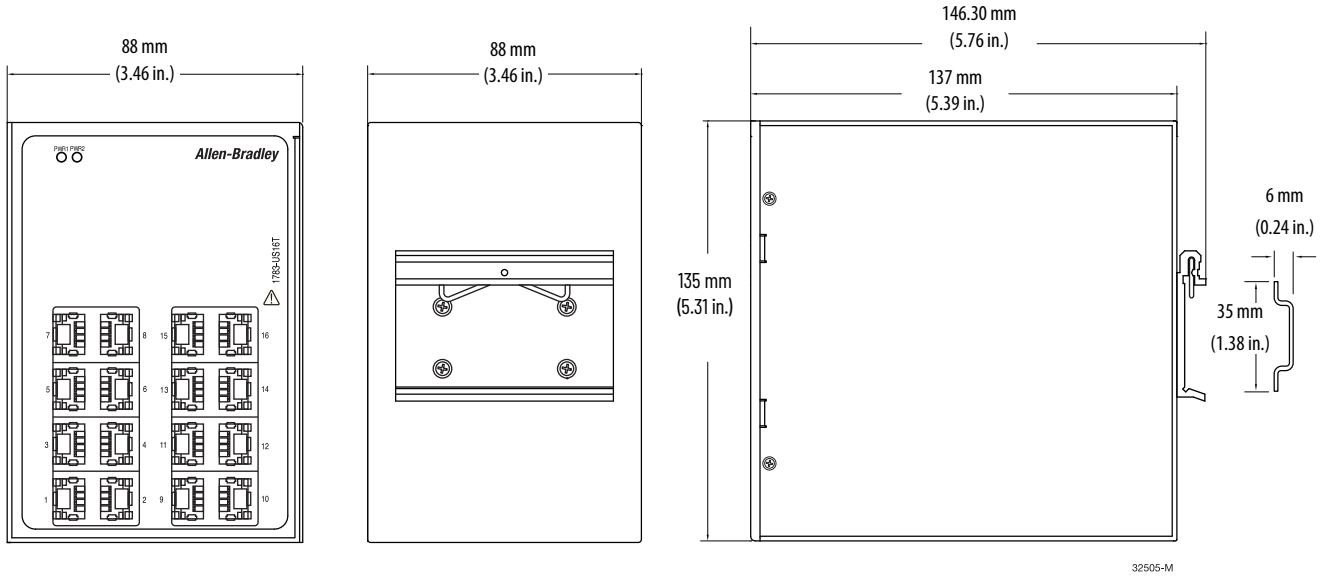

Stratix 2500 Ethernet Lightly Managed Switches

Cat. No.	Description	Total Ports
1783-LMS5	5 ports copper 10/100	5
1783-LMS8	8 ports copper 10/100	8

Table 9 - Technical Specifications - Stratix 2500 Switches

Attribute	1783-LMS5	1783-LMS8
Power input	12...24V DC, 0.3...0.2 A(SELV)	12...24V DC, 0.4...0.2 A (SELV)
Power consumption	4.2 W	5.3 W
Power dissipation	4.2 W	5.3 W
Wire size, Ethernet connection(1)	RJ45 connector according to IEC 60603-7, 2 or 4 pair Category 5e minimum cable according to TIA 568-B.1 or Category 5 cable according to ISO/IEC 24702	
Wire size, DC power connection	1.3...0.82 mm^2 (16...18 AWG) solid or stranded copper wire rated at 30 °C (86 °F), or greater, above the surrounding air temperature	
Wire size, ground connection	5.2...3.3 mm^2 (10...12 AWG) solid or stranded copper wire	
Torque, power terminal screw	0.19 N•m (1.7 in•lb)	
Torque, functional ground lug screw	0.51 N•m (4.5 in•lb)	
Wiring category(2)(3)	2 - on power ports 2 - on communication ports	
Enclosure type rating	None (open-style)	
North American temp code	T4	
ATEX temp code	T4	

(1) See page 83 for recommended products.
(2) Use this conductor category information for planning conductor routing. Refer to Industrial Automation Wiring and Grounding Guidelines, publication 1770-4.1..
(3) Use this Conductor Category information for planning conductor routing as described in the Stratux 2500 Managed Switches Installation Instructions, publication 1783-IN011.

Table 10 - Environmental Specifications - Stratix 2500 Switches

Attribute	1783-LMS5, 1783-LMS8
Temperature, operating IEC 60068-2-1 (Test Ad, Operating Cold), IEC 60068-2-2 (Test Bd, Operating Dry Heat), IEC 60068-2-14 (Test Nb, Operating Thermal Shock)	-20 °C < Ta < +60 °C (-4 °F < Ta < +140 °F)
Temperature, ambient, max	60 °C (140 °F)
Temperature, surrounding air, max	60 °C (140 °F)
Temperature, nonoperating IEC 60068-2-1 (Test Ab, Unpackaged Nonoperating Cold), IEC 60068-2-2 (Test Bb, Unpackaged Nonoperating Dry Heat), IEC 60068-2-14 (Test Na, Unpackaged Nonoperating Thermal Shock)	-40...+85 °C (-40...+185 °F)
Relative humidity IEC 60068-2-30 (Test Db, Unpackaged Damp Heat)	5...95% noncondensing
Shock, operating IEC 60068-2-27 (Test Ea, Unpackaged Shock)	30 g
Shock, nonoperating IEC 60068-2-27 (Test Ea, Unpackaged Shock)	30 g
Emissions CISPR11 (IEC 61000-6-4)	IEC 61000-6-4
ESD immunity IEC 61000-4-2	6 kV contact discharges 8 kV air discharges
Radiated RF immunity IEC 61000-4-3	10V/m with 1 kHz sine-wave 80% AM from 80...2000 MHz 10V/m with 200 Hz 50% Pulse 100% AM at 900 MHz 10V/m with 200 Hz 50% Pulse 100% AM at 1890 MHz 3V/m with 1 kHz sine-wave 80% AM from 2000...2700 MHz
EFT/B immunity IEC 61000-4-4	±3 kV at 5 @ 100 kHz on DC power ports ±3 kV at 5 @ 100 kHz on Ethernet ports
Surge transient immunity IEC 61000-4-5	±1 kV line-line(DM) and ±2 kV line-earth(CM) on DC power ports ±2 kV line-earth(CM) on communication ports
Conducted RF immunity IEC 61000-4-6	10V rms with 1 kHz sine-wave 80% AM from 150 kHz...80 MHz
Environmental rating	IP30

Table 11 - Certifications - Stratix 2500 Switches

Certifications (when product is marked)[1]	1783-LMS5, 1783-LMS8
c-UL-us	UL Listed Industrial Control Equipment, certified for US and Canada. See UL File E65584. UL Listed for Class I, Division 2 Group A,B,C,D Hazardous Locations, certified for U.S. and Canada. See UL File E194810. UL Listed for Class I, Zone 2 Hazardous Locations, certified for U.S. and Canada. See UL File E194810. • Ex nA IIC T4 Gc X • AEx nA IIC T4 Gc
CCC	CCC 2021122310114052 CNCA-C23-01 强制性产品认证实施规则 防爆电气 CNCA-C23-01 CCC Implementation Rule Explosion-Proof Electrical Products
RCM	Australian Radiocommunications Act, compliant with: • AS/NZS CISPR 11; Industrial Emissions
Ex	European Union 2014/34/EU ATEX Directive, compliant with: • EN IEC 60079-0; General Requirements • EN IEC 60079-7; Explosive Atmospheres, Protection "e" • II 3 G Ex ec IIC T4 Gc • DEMKO 16 ATEX 1731
UKCA	In conformity with the following UK Statutory Instruments and their amendments: • 2016 No. 1091 – Electromagnetic Compatibility Regulations • 2016 No. 1101 – Electrical Equipment (Safety) Regulations • 2016 No. 1107 – Equipment and Protective Systems Intended for Use in Potentially Explosive Atmospheres Regulations • 2012 No. 3032 – Restriction of the Use of Certain Hazardous Substances in Electrical and Electronic Equipment Regulations
EAC	Russian Customs Union TR CU 020/2011 EMC Technical Regulation
EtherNet/IP	ODVA conformance tested to EtherNet/IP specifications
KCC	KNN; KN11 (Group 1, Class A), IEC61000-6-2
BSMI	CNS 13438 (95); CNS14336-1 (99) Taiwan

(1) See the Product Certification link at http://www.ab.com for Declarations of Conformity, Certificates, and other certification details.

Dimensions—Stratix 2500 Switches

Figure 10 - 1783-LMS5 Switch Dimensions

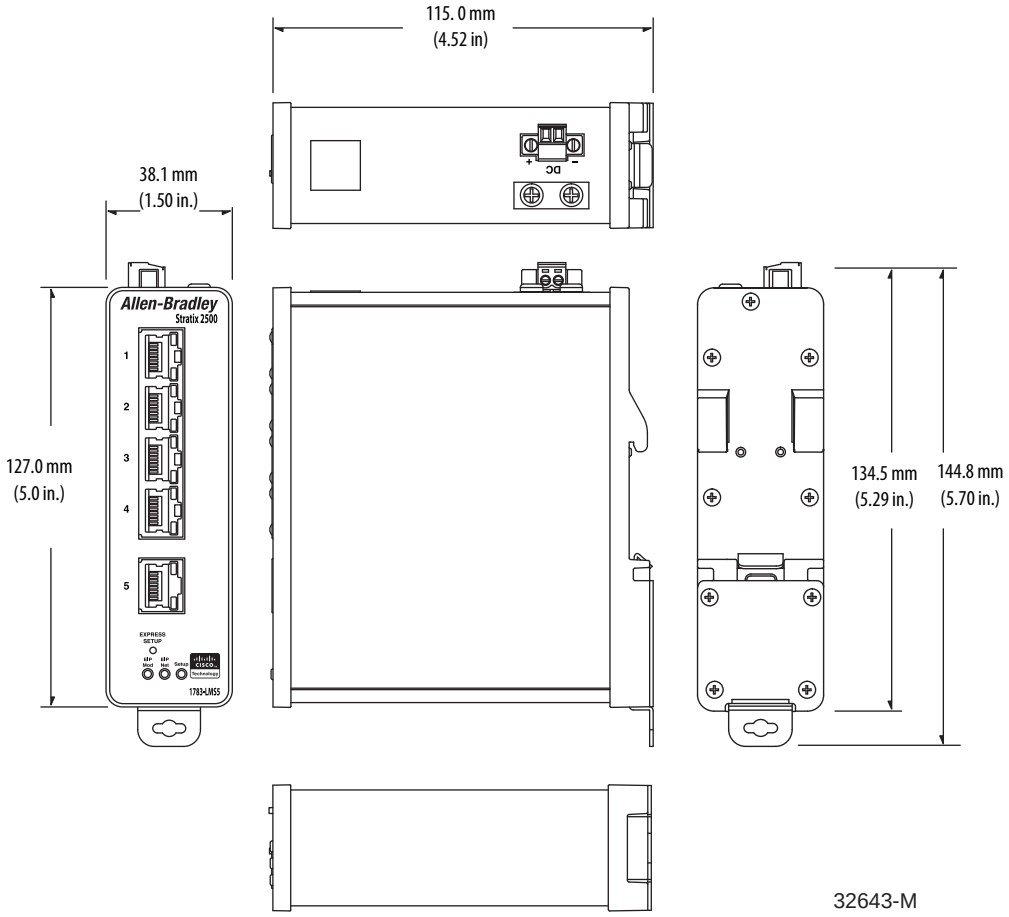

Figure 11 - 1783-LMS8 Switch Dimensions

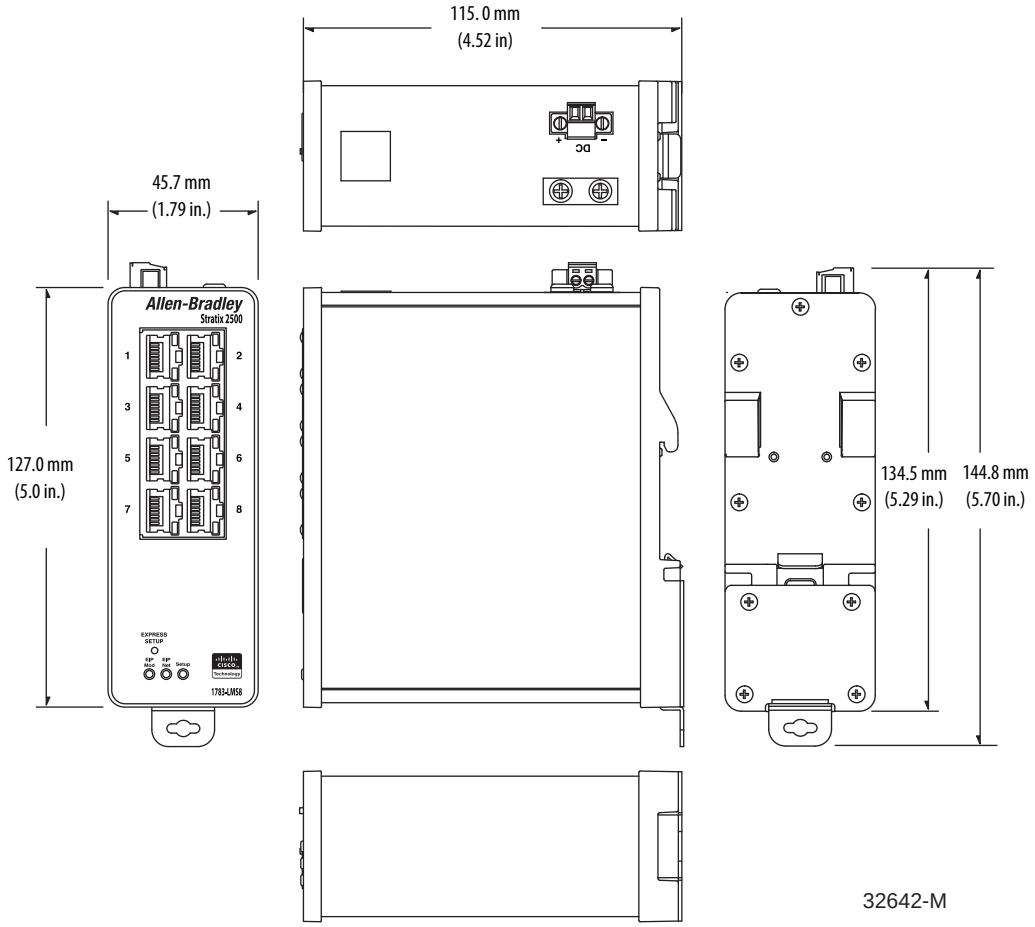

Stratix 4300 Remote Access Routers

Table 12 - Technical Specifications - Stratix 4300 Remote Access Routers

Attribute	1783-RA2TGB	1783-RA5TGB
Power input	24V DC(9...34V DC), 0.6 A (SELV)	
Current rating max	0.6 A	
Inrush current	10 A max	
Power dissipation	15.8 W max	
Isolation voltage	500V	
Number of ports	LAN: 1 WAN: 1	LAN: 4 WAN: 1
Port type	RJ45 ports	
Contact voltage rating	250V DC	
Coil voltage supply	5V	
Weight	Packed: 0.75 Kg Unpacked: 0.415Kg	Packed: 0.81 Kg Unpacked: 0.47 Kg
Minimum air gap clearance	50 mm (1.97 in) in all directions	
Wire type	Copper	
Screw torque, power terminals	0.22...0.25 N•m (2.0...2.2 in•lb)	
Enclosure type rating	None (open-style)	
Battery Type	BR1225A 3V	

Table 13 - Environmental Specifications - Stratix 4300 Remote Access Routers

Attribute	1783-RA2TGB, 1783-RA5TGB
Temperature, operating IEC 60068-2-1 (Test Ad, Operating Cold), IEC 60068-2-2 (Test Bd, Operating Dry Heat), IEC 60068-2-14 (Test Nb, Operating Thermal Shock)	-20°C ≤ Ta ≤ +65 °C (-4°F ≤ Ta ≤+149 °F)
Temperature, ambient, max	65 °C (149 °F)
Temperature, surrounding air, max	65 °C (149 °F)
Temperature, nonoperating IEC 60068-2-1 (Test Ab, Unpackaged Nonoperating Cold), IEC 60068-2-2 (Test Bb, Unpackaged Nonoperating Dry Heat), IEC 60068-2-14 (Test Na, Unpackaged Nonoperating Thermal Shock)	-40°C < +75 °C (-40°F < +167 °F)
Relative humidity IEC 60068-2-30 (Test Db, Unpackaged Damp Heat)	5...95% noncondensing
Vibration IEC 60068-2-6(Test Fc, Operating)	2 g @ 10...500 Hz
Shock, operating IEC 60068-2-27 (Test Ea, Unpackaged Shock)	15 g
Shock, nonoperating IEC 60068-2-27 (Test Ea, Unpackaged Shock)	15 g
Emissions CISPR11/22 Class A	CISPR 16, EN 60326
ESD immunity IEC 61000-4-2	4 kV contact discharges 8 kV air discharges
Radiated RF immunity IEC 61000-4-3	10V/m with 1 kHz sine-wave 80% AM from 80...1000 MHz 3V/m with 1 kHz sine-wave 80% AM from 2000...2700 MHz 3V/m with 1 kHz sine-wave 80% AM from 2700...6000 MHz
EFT/B immunity IEC 61000-4-4	±1 kV at 5 kHz on DC power ports ±1 kV at 5 kHz on communication ports
Surge transient immunity IEC 61000-4-5	±1 kV line-line(DM) and ±2 kV line-earth(CM) on DC power ports ±1 kV line-earth(CM) on communication ports
Conducted RF immunity IEC 61000-4-6	10V rms with 1 kHz sine-wave 80% AM from 150 kHz...30 MHz
Magnetic Field Immunity IEC 6100-4-8	30 A/m long duration and 300 A/m short duration at 50 Hz
Environmental rating	IP20

Table 14 - Certifications - Stratix 4300 Remote Access Routers

Certifications (when product is marked)[1]	1783-RA2TGB, 1783-RA5TGB
c-UL-us	UL Listed Industrial Control Equipment, certified for US and Canada. See UL File E65584.
CE	European Union 2014/30/EU EMC Directive, compliant with: • EN 61000-6-4; Industrial Emissions
RCM	Australian Radiocommunications Act, compliant with: • EN 61000-6-4; Industrial Emissions
KC	Korean Registration of Broadcasting and Communications Equipment, compliant with: • Article 58-2 of Radio Waves Act, Clause 3
Morocco	In conformity with the following regulations: • Arrêté ministériel n° 6404-15 du 1 er muharram 1437 (15 octobre 2015), Équipements électriques destinés à être utilisés sous certaines limites de tension Arrêté ministériel n° 6404-15 du 29 ramadan 1436 (16 juillet 2015), Compatibilité électromagnétique des équipements.
UCKA	In conformity with the following UK Statutory Instruments and their amendments: • 2016 No. 1091, Electromagnetic Compatibility Regulations2016 No. 1101, Electrical Equipment (Safety) Regulations2016 No. 1107, Equipment and Protective Systems Intended for Use in Potentially Explosive Atmospheres Regulations2012 No. 3032, Restriction of the Use of Certain Hazardous Substances in Electrical and Electronic Equipment Regulations.

(1) See the Product Certification link at http://www.ab.com for Declarations of Conformity, Certificates, and other certification details.

Dimensions - Stratix 4300 Remote Access Routers

To help prevent the switch from overheating, a clearance of 50 mm (1.97 in) minimum on all sides is recommended. Also, verify that aeration holes are not covered.

Figure 12 - Stratix 4300 Remote Access Router - 1783-RA2TGB

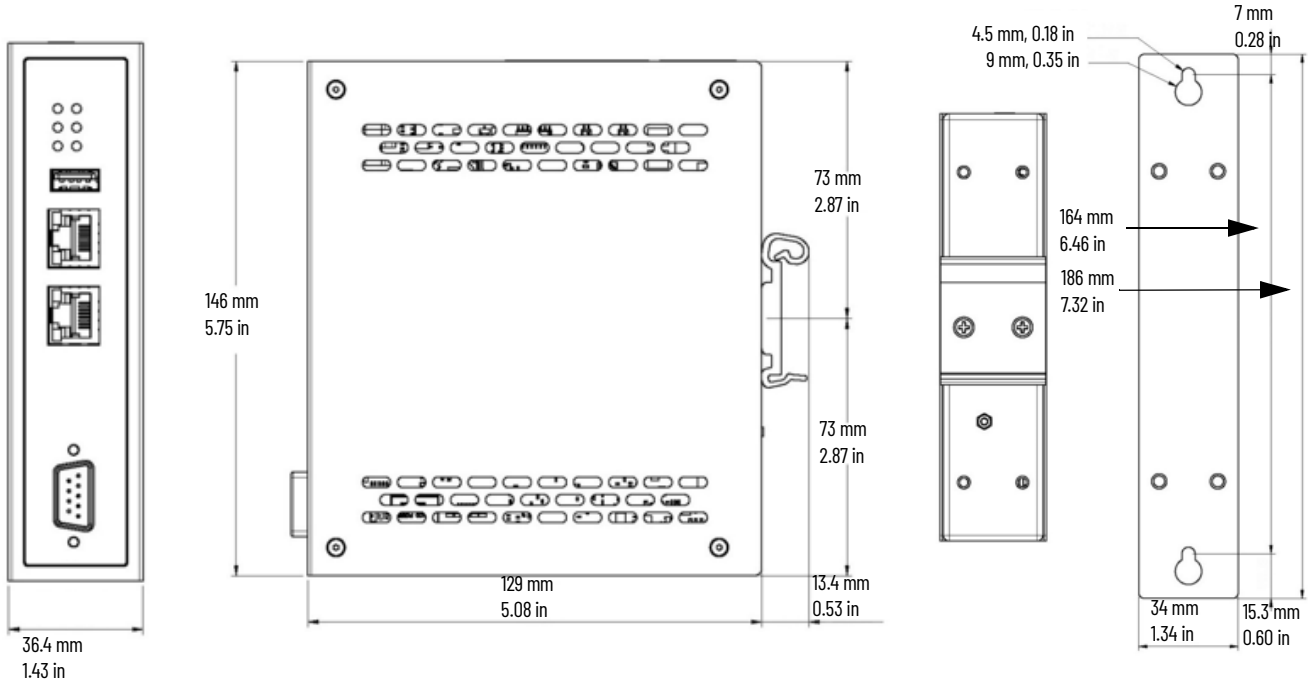

Figure 13 - Stratix 4300 Remote Access Router - 1783-RA5TGB

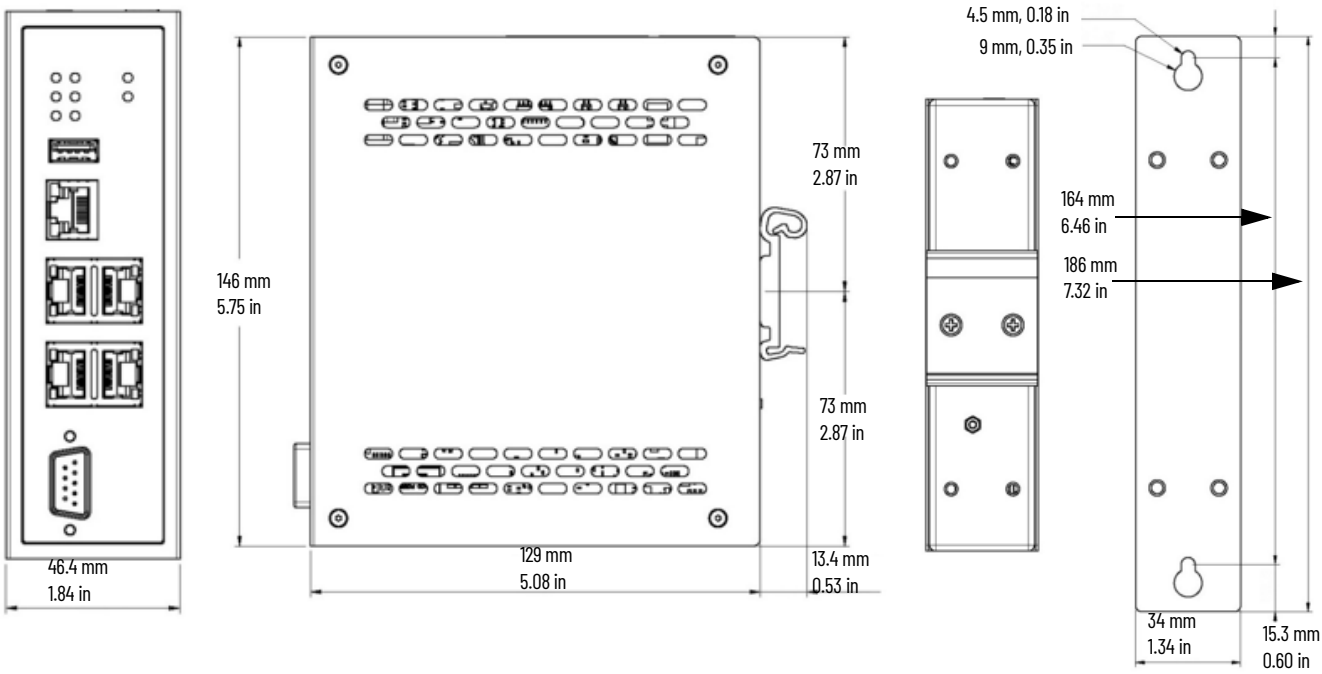

Stratix 5400 Ethernet Managed Switches

Cat. No.	Total Ports	RJ45 Ports(1)	Combo Ports	PoE/PoE+ Ports	SFP Slots	Firmware Type	CIP Sync (IEEE 1588)	NAT	DLR
1783-HMS4C4CGN	8	—	4 FE + 4 GE	—	—	Layer 2	Yes	Yes	Yes
1783-HMS8T4CGN	12	8 FE	4 GE	—	—	Layer 2	Yes	Yes	Yes
1783-HMS8S4CGN	12	—	4 GE	—	8 FE	Layer 2	Yes	Yes	Yes
1783-HMS4T4E4CGN	12	4 FE	4 GE	4 FE	—	Layer 2	Yes	Yes	Yes
1783-HMS4S8E4CGN	16	—	4 GE	8 FE	4 FE	Layer 2	Yes	Yes	Yes
1783-HMS16T4CGN	20	16 FE	4 GE	—	—	Layer 2	Yes	Yes	Yes
1783-HMS8TG4CGN	12	8 GE	4 GE	—	—	Layer 2	Yes	Yes	Yes
1783-HMS8SG4CGN	12	—	4 GE	—	8 GE	Layer 2	Yes	Yes	Yes
1783-HMS4EG8CGN	12	—	8 GE	4 GE	—	Layer 2	Yes	Yes	Yes
1783-HMS4SG8EG4CGN	16	—	4 GE	8 GE	4 GE	Layer 2	Yes	Yes	Yes
1783-HMS16TG4CGN	20	16 GE	4 GE	—	—	Layer 2	Yes	Yes	Yes
1783-HMS8TG8EG4CGN	20	8 GE	4 GE	8 GE	—	Layer 2	Yes	Yes	Yes
1783-HMS8TG4CGR	12	8 GE	4 GE	—	—	Layer 3	Yes	Yes	Yes
1783-HMS8SG4CGR	12	—	4 GE	—	8 GE	Layer 3	Yes	Yes	Yes
1783-HMS4EG8CGR	12	—	8 GE	4 GE	—	Layer 3	Yes	Yes	Yes
1783-HMS4SG8EG4CGR	16	—	4 GE	8 GE	4 GE	Layer 3	Yes	Yes	Yes
1783-HMS16TG4CGR	20	16 GE	4 GE	—	—	Layer 3	Yes	Yes	Yes
1783-HMS8TG8EG4CGR	20	8 GE	4 GE	8 GE	—	Layer 3	Yes	Yes	Yes

(1) FE = Fast Ethernet; GE = Gigabit Ethernet

Table 15 - Technical Specifications - Stratix 5400 Switches

Attribute	1783-HMS8T4CGN, 1783-HMS16T4CGN, 1783-HMS8TG4CGN, 1783-HMS8TG4CGR	1783-HMS4C4CGN, 1783-HMS16TG4CGN, 1783-HMS16TG4CGR	1783-HMS8S4CGN, 1783-HMS8SG4CGN, 1783-HMS8SG4CGR	1783-HMS4T4E4CGN	1783-HMS4S8E4CGN, 1783-HMS8TG8EG4CGN, 1783-HMS4SG8EG4CGN, 1783-HMS4EG8CGN, 1783-HMS4SG8EG4CGR, 1783-HMS8TG8EG4CGR, 1783-HMS4EG8CGR
Alarm relay	1 A @ 30V DC or 0.5 A @ 48V DC				
Power input	3.7 A max @ 12...54V DC	4.3 A max @ 12...54V DC	5.0 A max @ 12...54V DC	3.7 A max @ 12...54V DC	4.3 A max @ 12...54V DC
PoE power input(1)	—			44...54V DC for PoE 50...54V DC for PoE+ or a combination of PoE and PoE+	
Power consumption(2)	35 W @ 24V DC @ 40 °C (104 °F)	40 W @ 24V DC @ 40 °C (104 °F)	42 W @ 24V DC @ 40 °C (104 °F)	35 W @ 24V DC @ 40 °C (104 °F) PoE power at 50V: 120 W	40 W @ 24V DC @ 40 °C (104 °F) PoE power at 50V: 124 W
Power dissipation	35 W	40 W	42 W	35 W	42 W
Isolation voltage	60V (continuous), basic insulation type, all ports to ground No isolation between individual ports Type tested at 500V AC for 60 s				
Wire size, ground connection	4 mm^2 (10 AWG) solid or stranded copper wire				
Wire size, DC power connection	0.82...0.52 mm^2 (18...20 AWG) solid or stranded copper wire rated at 30 °C (86 °F), or greater, above the surrounding air temperature 6.3 mm (0.25 in.) ± 0.5 mm (0.02 in.) strip length				
Wire size, alarm connection	0.5...0.8 mm^2 (20...18 AWG) solid or stranded, UL/CSA-rated style 1007 or 1569 twisted-pair copper appliance wiring material (AWM) wire, 6.3 mm(0.25 in.) ± 0.5 mm (0.02 in.) strip length				
Screw torque,ground terminal	0.51 N•m (4.5 in•lb)				
Screw torque, power terminal	0.56 N•m (5.0 in•lb)				
Screw torque, alarm terminal	0.23 N•m (2.0 in•lb)				

Table 15 - Technical Specifications - Stratix 5400 Switches (Continued)

Attribute	1783-HMS8T4CGN, 1783-HMS16T4CGN, 1783-HMS8TG4CGN, 1783-HMS8TG4CGR	1783-HMS4C4CGN, 1783-HMS16TG4CGN, 1783-HMS16TG4CGR	1783-HMS8S4CGN, 1783-HMS8SG4CGN, 1783-HMS8SG4CGR	1783-HMS4T4E4CGN	1783-HMS4S8E4CGN, 1783-HMS8TG8EG4CGN, 1783-HMS4SG8EG4CGN, 1783-HMS4EG8CGN, 1783-HMS4SG8EG4CGR, 1783-HMS8TG8EG4CGR, 1783-HMS4EG8CGR
Weight, approx	2.88 kg (6.35 lb)				
Wiring category(3)	3 - on console ports 2 - on DC power and alarm ports 2 - on Ethernet ports				
Enclosure type rating	None (open-style)				
Pilot duty rating	Alarm not rated				
North American temp code	T3				
ATEX temp code	T3				
SFP modules(4)	1783-SFP100FX 1783-SFP100LX 1783-SFP100EXC 1783-SFP100ZXC 1783-SFP100T(5) 1783-SFP1GSX(6) 1783-SFP1GLX(6) 1783-SFP1GEXE(6) 1783-SFP1GZX(6) 1783-SFP1GTE(6)				
Memory card replacement	1784-SD1				

(1) The initial power allocation and the maximum power allocation on a PoE port are configurable in Device Manager or the Logix Designer application. For details about PoE power budgets, see the Stratix Managed Switches User Manual, publication 1783-UM007.

(2) For PoE configurations, the power consumption values listed represent the highest values that can be configured using all ports. A general guideline is 0.5 W per 30 W PoE+ port used.
(3) Use this conductor category information for planning conductor routing. Refer to Industrial Automation Wiring and Grounding Guidelines, publication 1770-4.1.
(4) For SFP specifications, see page 81.
(5) The 1783-SFP100T module requires Stratix 5400 firmware revision 3.001or later.
(6) Gigabit Ethernet (GE) SFP modules work only in GE SFP slots. For a list of Stratix 5400 catalog numbers with GE SFP slots, see page 23.

Table 16 - Environmental Specifications - Stratix 5400 Switches

Attribute	Stratix 5400 Switches
Temperature, operating IEC 60068-2-1 (Test Ad, Operating Cold), IEC 60068-2-2 (Test Bd, Operating Dry Heat), IEC 60068-2-14 (Test Nb, Operating Thermal Shock)	-40...+70 °C (-40...+158 °F)
Temperature, surrounding air, max	70 °C (158 °F)
Temperature, nonoperating IEC 60068-2-1 (Test Ab, Unpackaged Nonoperating Cold), IEC 60068-2-2 (Test Bb, Unpackaged Nonoperating Dry Heat), IEC 60068-2-14 (Test Na, Unpackaged Nonoperating Thermal Shock)	-40...+85 °C (-40...+185 °F)
Relative humidity IEC 60068-2-30 (Test Db, Unpackaged Damp Heat):	5...90% noncondensing
Vibration IEC 60068-2-6 (Test Fc, Operating)	1 g @ 5...150 Hz
Shock, operating IEC 60068-2-27 (Test Ea, Unpackaged Shock)	15 g
Shock, nonoperating IEC 60068-2-27 (Test Ea, Unpackaged Shock)	30 g
Emissions IEC 61000-6-4	IEC 61000-6-4
ESD immunity IEC 61000-4-2	6 kV contact discharges 8 kV air discharges
Radiated RF immunity IEC 61000-4-3	20V/m with 1 kHz sine-wave 80% AM from 80...2000 MHz 10V/m with 200 Hz 50% Pulse 100% AM at 900 MHz 10V/m with 200 Hz 50% Pulse 100% AM at 1890 MHz 20V/m with 1 kHz sine-wave 80% AM from 2000...2700 MHz
EFT/B immunity IEC 61000-4-4	±3 kV at 5 @ 100 kHz on DC power ports ±3 kV at 5 @ 100 kHz on alarm ports ±3 kV at 5 @ 100 kHz on Ethernet ports
Surge transient immunity IEC 61000-4-5	±1 kV line-line (DM) and ±2 kV line-earth (CM) on DC power ports ±1 kV line-line (DM) and ±2 kV line-earth (CM) on alarm ports ±2 kV line-earth(CM) on Ethernet ports
Conducted RF immunity IEC 61000-4-6	10V rms with 1 kHz sine-wave 80% AM from 150 kHz...80 MHz
Magnetic field immunity IEC 61000-4-8	300 A/m long duration and 1000 A/m short duration at 50 @ 60 Hz
Magnetic pulse immunity IEC 61000-4-9	300 A/m pulse
Voltage variation IEC 61000-4-29	10 ms interruption on DC power ports
Damped oscillatory wave immunity IEC 61000-4-18	±1 kV line-line (DM) and ±2.5 kV line-earth (CM) on power and alarm ports ±2.5 kV line-earth (CM) on Ethernet ports
Electric Power Stations Communications Networking EEE 1613	EEE 1613
Electric Substations Communications Networking IEC 61850-3	IEC 61850-3[(1)]

(1) The switch only meets the requirements of IEC 61850-3 when powered by a redundant power supply configuration.

Table 17 - Certifications - Stratix 5400 Switches

Certifications (when product is marked)[1]	Stratix 5400 Switches
c-UL-us	UL Listed Industrial Control Equipment, certified for US and Canada. See UL File E65584. UL Listed for Class I, Division 2 Group A,B,C,D Hazardous Locations, certified for U.S. and Canada. See UL File E194810. UL Listed for Class I, Zone 2 Hazardous Locations, certified for U.S. and Canada. See UL File E194810. Ex nA nC IIC T3 Gc X AEx nA nC IIC T3 Gc
CCC	CCC 2020012310358976 CNCA-C23-01 强制性产品认证实施规则 防爆电气 CNCA-C23-01 CCC Implementation Rule Explosion-Proof Electrical Products
CE	European Union 2004/108/EC EMC Directive, compliant with: • EN 61326-1; Meas./Control/Lab., Industrial Requirements • EN 61000-6-2; Industrial Immunity • EN 61000-6-4; Industrial Emissions • EN 61131-2; Programmable Controllers (Clause 8, Zone A & B) European Union 2011/65/EU RoHS, compliant with: • EN 50581; Technical Documentation
RCM	Australian Radiocommunications Act, compliant with: ACMA EMC Std 08
Ex	UK Statutory Instrument 2016 No. 1107 and European Union 2014/34/EU ATEX Directive, compliant with: • EN IEC 60079-0; General Requirements • EN IEC 60079-7; Explosive Atmospheres, Protection "e" • II 3 G Ex ec nC IIC T3 Gc • DEMKO14ATEX1423X, UL22UKEX2728X
UKCA	In conformity with the following UK Statutory Instruments and their amendments: • 2016 No. 1091, Electromagnetic Compatibility Regulations • 2016 No. 1101, Electrical Equipment (Safety) Regulations • 2016 No. 1107, Equipment and Protective Systems Intended for Use in Potentially Explosive Atmospheres Regulations • 2012 No. 3032, Restriction of the Use of Certain Hazardous Substances in Electrical and Electronic Equipment
KC	Korean Registration of Broadcasting and Communications Equipment, compliant with: • Article 58-2 of Radio Waves Act, Clause 3
EtherNet/IP	ODVA conformance tested to EtherNet/IP specifications
Anatel	Brazilian regulations (Federal Law 9472/97)
EAC	Russian Customs Union TR CU 020 EMC Technical Regulation
BSMI	CNS 13438 (95); CNS14336-1 (99) Taiwan

(1) See the Product Certification link at http://www.ab.com for declarations of conformity, certificates, and other certification details.

Dimensions—Stratix 5400 Switches

To prevent the switch from overheating, observe the following minimum clearances:

- Top and bottom: 50.8 mm (2.0 in.)
- Sides: 50.8 mm (2.0 in.)
- Front: 50.8 mm (2.0 in.)

These diagrams are representative of the Stratix 5400 switches. Actual faceplates vary depending on the catalog number.

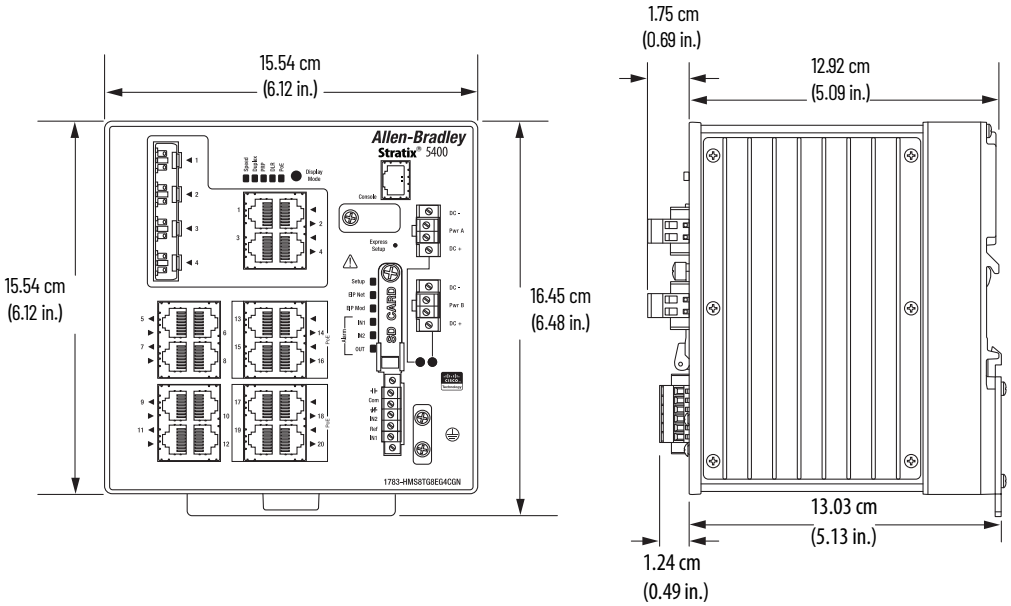

Stratix 5410 Ethernet Managed Switches

Cat. No.	Total Ports	PoE/PoE+ Ports	SFP Slots(2)	Firmware Type	CIP Sync (IEEE 1588)	NAT	Power Supply(3)	Conformal Coating
1783-IMS28GNDC	28	12 GE	12 GE + 4 GE only	Layer 2	Yes	Yes	Low DC	—
1783-IMS28GNAC	28	12 GE	12 GE + 4 GE only	Layer 2	Yes	Yes	AC/High DC	—
1783-IMS28NDC	28	12 GE	12 GE + 4 TEN	Layer 2	Yes	Yes	Low DC	Yes
1783-IMS28NAC	28	12 GE	12 GE + 4 TEN	Layer 2	Yes	Yes	AC/High DC	Yes
1783-IMS28GRDC	28	12 GE	12 GE + 4 GE only	Layer 3	Yes	Yes	Low DC	—
1783-IMS28GRAC	28	12 GE	12 GE + 4 GE only	Layer 3	Yes	Yes	AC/High DC	—
1783-IMS28RDC	28	12 GE	12 GE + 4 TEN	Layer 3	Yes	Yes (Layer 2)	Low DC	Yes
1783-IMS28RAC	28	12 GE	12 GE + 4 TEN	Layer 3	Yes	Yes (Layer 2)	AC/High DC	Yes
Optional Power Supplies(1)								
1783-IMXDC	Low DC							
1783-IMXAC	AC/High DC							

(1) The switch supports an optional second power supply of any voltage type to provide redundancy and additional power for PoE devices. One power supply provides 60 W for PoE/PoE+. Two power supplies provide 185 W for PoE/PoE+.
(2) GE = 100 Megabit/1 Gigabit Ethernet; GE only = 1 Gigabit Ethernet; TEN = 1/10 Gigabit Ethernet
(3) One power supply ships pre-installed in each Stratix 5410 switch.

Table 18 - Technical Specifications - Stratix 5410 Switches

Attribute	1783-IMS28NDC, 1783-IMS28RDC, 1783-IMS28GNDC, 1783-IMS28GRDC	1783-IMS28NAC, 1783-IMS28RAC, 1783-IMS28GNAC, 1783-IMS28GRAC
Alarm relay	30V DC, 1 A or 48V DC, 0.5 A	
Power input	24...60V DC, 10 A	100...240V AC, 2 A, 50...60 Hz (per slot) or 100...250V DC, 2 A (per slot)
PoE output	54V DC, 15.4 W max	
PoE+ output(1)	54V DC, 30 W max	
Power consumption(2)	One power supply installed: No PoE ports on: 74 W @ 24V DC @ 40°C (104°F), 76 W max 4 PoE ports on, 148 W max: 145 W @ 24V DC @ 40°C (104°F) Two power supplies installed: PoE power consumption alone (12 ports PoE): 210 W@ 24V DC @ 40°C (104°F); 215 W max Complete system power, including 12 ports PoE: 291 W max	One power supply installed: No PoE ports on: 74 W @ 120V,60Hz / 230V, 50Hz AC @ 40°C (104°F), 76W max 4 PoE ports on, 148 W max: 145W @ 120V,60Hz / 230V, 50Hz AC @ 40°C (104°F) Two power supplies installed: PoE power consumption alone (12 ports PoE): 210 W@120V, 60Hz/ 230V, 50 Hz AC @ 40°C (104°F); 215 W max Complete system power, including 12 ports PoE: 291 W max
Power dissipation	100 W	100 W
Isolation voltage	60V (continuous), basic insulation type Type tested at 3000 V DC for 60 s AC input power to alarm output AC input power to Ethernet ports AC input power to console port AC input power to ground	
Wire size, Ethernet connection	RJ45 connector according to IEC 60603-7, 2 or 4 pair Category 5e minimum cable according to TIA 568-B.1 or Category 5 cable according to ISO/IEC 24702	
Wire size, ground connection	13.3 mm^2 (6 AWG) solid or stranded copper wire	

Table 18 - Technical Specifications - Stratix 5410 Switches (Continued)

Attribute	1783-IMS28NDC, 1783-IMS28RDC, 1783-IMS28GNDC, 1783-IMS28GRDC	1783-IMS28NAC, 1783-IMS28RAC, 1783-IMS28GNAC, 1783-IMS28GRAC
Wire size, alarm connection	Category 5e minimum cable according to TIA 568-B.1 or Category 5 cable according to ISO/IEC 24702	
Wire size, power supply	3.3mm^2 (12 AWG) twisted-pair copper wire	1.3mm^2 (16 AWG) twisted-pair copper wire
Wiring category(3)	3 - on console ports 2 - on power and alarm ports 2 - on Ethernet ports	
Wire type	Copper	
Pilot duty rating	Alarm not rated	
North American temp code	T4	
ATEX temp code	T4	
Screw torque, power supply mount	0.904...1.13 N•m (8...10 in•lb)	
Screw torque, power terminal	0.96 N•m (± 0.06 N•m) or 8.5 in•lb (± 0.5 in•lb)	
Screw torque, ground terminal	3.39 N•m (± 0.23 N•m) or 30 in•lb (± 2 in•lb)	
Weight, approx, switch with power supply, power supply blank, and SD card	7.30 kg (16.1 lb)	
Weight, approx, power supply only	1.179 kg (2.6 lb)	
Weight, approx, accessory kit	0.18 kg (0.4 lb)	
Enclosure type rating	None (open-style)	
SFP modules(4)	1783-SFP100FX 1783-SFP100LX 1783-SFP100EXC 1783-SFP100ZXC 1783-SFP100T(5) 1783-SFP1GSX 1783-SFP1GLX 1783-SFP1GEXE 1783-SFP1GZX 1783-SFP10GSRE 1783-SFP10GLRE 1783-SFP1GTE	
Memory card replacement	1784-SD1	

(1) A second power supply is required to support PoE+.
(2) For PoE configurations, the power consumption values listed represent the highest values that can be configured using all ports. A general guideline is 0.5 W per 30 W PoE+ port used.
(3) Use this conductor category information for planning conductor routing. Refer to Industrial Automation Wiring and Grounding Guidelines, publication 1770-4.1.
(4) SFP modules are supported only on switches with combo ports or SFP slots. For SFP specifications, see page 81.
(5) The 1783-SFP100T module requires Stratix 5410 firmware revision 3.001or later.

Table 19 - Environmental Specifications - Stratix 5410 Switches

Attribute	Stratix 5410 Switches
Temperature, operating IEC 60068-2-1 (Test Ad, Operating Cold), IEC 60068-2-2 (Test Bd, Operating Dry Heat), IEC 60068-2-14 (Test Nb, Operating Thermal Shock)	-40...+60 °C (-40...+140 °F)
Temperature, ambient, max	60 °C (140 °F)
Temperature, surrounding air, max	60 °C (140 °F)
Temperature, nonoperating IEC 60068-2-1 (Test Ab, Unpackaged Nonoperating Cold), IEC 60068-2-2 (Test Bb, Unpackaged Nonoperating Dry Heat), IEC 60068-2-14 (Test Na, Unpackaged Nonoperating Thermal Shock)	-40...+85 °C (-40...+185 °F)
Relative humidity IEC 60068-2-30 (Test Db, Unpackaged Damp Heat):	5...95% noncondensing
Vibration IEC 60068-2-6 (Test Fc, Operating)	1 g @ 5...150 Hz
Shock, operating IEC 60068-2-27 (Test Ea, Unpackaged Shock)	15 g
Shock, nonoperating IEC 60068-2-27 (Test Ea, Unpackaged Shock)	30 g
Emissions IEC 61000-6-4	IEC 61000-6-4
ESD immunity IEC 61000-4-2	6 kV contact discharges 8 kV air discharges
Magnetic field immunity IEC 61000-4-8	30 A/m long duration and 300 A/m short duration at 50 Hz and 60 Hz
Radiated RF immunity IEC 61000-4-3	10V/m with 1 kHz sine-wave 80% AM from 80...2000 MHz 10V/m with 200 Hz 50% Pulse 100% AM at 900 MHz 10V/m with 200 Hz 50% Pulse 100% AM at 1890 MHz 1V/m with 1 kHz sine-wave 80% AM from 2000...2700 MHz
EFT/B immunity IEC 61000-4-4	±2 kV at 5 kHz on power ports ±2 kV at 5 kHz on signal ports ±2 kV at 5 kHz on communication ports
Surge transient immunity IEC 61000-4-5	±1 kV line-line(DM) and ±2 kV line-earth(CM) on power ports ±500V line-line(DM) and ±1 kV line-earth(CM) on signal ports ±2 kV line-earth(CM) on communication ports
Conducted RF immunity IEC 61000-4-6	10V rms with 1 kHz sine-wave 80% AM from 150 kHz...80 MHz
Voltage variation IEC 61000-4-11	30% dips for 10 ms and 500 ms on AC supply ports 60% dips for 100 ms, 200 ms, and 1 s on AC supply ports 100% dips for 10 ms and 5 s on AC supply ports
Damped oscillatory wave immunity IEC 61000-4-18	±500V line-line(DM) and ±1 kV line-earth (CM) on signal ports ±1 kV line-line(DM) and ±2.5 kV line-earth (CM) on power ports ±500V line-earth(CM) on communication ports
Environmental rating	IP30
Electric Power Stations Communications Networking EEE 1613	EEE 1613
Electric Substations Communications Networking IEC 61850-3	IEC 61850-3(1)

(1) The switch only meets the requirements of IEC 61850-3 when powered by a redundant power supply configuration.

Table 20 - Certifications - Stratix 5410 Switches

Certifications (when product is marked)[1]	Stratix 5410 Switches
c-UL-us	UL Listed Industrial Control Equipment, certified for US and Canada. See UL File E65584. UL Listed for Class I, Division 2 Group A,B,C,D Hazardous Locations, certified for U.S. and Canada. See UL File E194810. UL Listed for Class I, Zone 2 Hazardous Locations, certified for U.S. and Canada. See UL File E194810. • Class 1, Zone 2, Ex nA nC IIC T4 Gc X • Class 1, Zone 2, AEx nA nC IIC T4 Gc
CCC	CCC 2020012310358978 CNCA-C23-01 强制性产品认证实施规则 防爆电气 CNCA-C23-01 CCC Implementation Rule Explosion-Proof Electrical Products
CE	European Union 1999/5/EC R&TTE Directive, compliant with: • EN 61000-6-2; Industrial Immunity • EN 61000-6-4; Industrial Emissions • EN 300 440-2 V1.4.1; ERM, SRD • EN 301 489-1 V1.9.2; ERM, EMC • EN 301 489-3 V1.6.1; ERM, EMC, SRD • EN 60950-1; Information Technology Equipment European Union 2011/65/EU RoHS, compliant with: • EN 50581; Technical Documentation
RCM	Australian Radiocommunications Act, compliant with: • EN 61000-6-4; Industrial Emissions
Ex	UK Statutory Instrument 2016 No. 1107 and European Union 2014/34/EU ATEX Directive, compliant with: • EN IEC 60079-0; General Requirements • EN IEC 60079-7; Explosive Atmospheres, Protection "e" • II 3 G Ex ec nC IIC T4 Gc • DEMKO15ATEX1492X, UL22UKEX2729X
UKCA	In conformity with the following UK Statutory Instruments and their amendments: • 2016 No. 1091, Electromagnetic Compatibility Regulations • 2016 No. 1101, Electrical Equipment (Safety) Regulations • 2016 No. 1107, Equipment and Protective Systems Intended for Use in Potentially Explosive Atmospheres Regulations • 2012 No. 3032, Restriction of the Use of Certain Hazardous Substances in Electrical and Electronic Equipment
KC	Korean Registration of Broadcasting and Communications Equipment, compliant with: • Article 58-2 of Radio Waves Act, Clause 3
EtherNet/IP	ODVA conformance tested to EtherNet/IP specifications
RED	Hereby, Rockwell Automation declares that the radio equipment type Stratix 5410 is in compliance with Directive 2014/53/EU. The full text of the EU Declaration of Conformity is available at the following internet address: www.rockwellautomation.com
BSMI	CNS 13438 (95); CNS14336-1 (99) Taiwan

(1) See the Product Certification link at http://www.ab.com for declarations of conformity, certificates, and other certification details.

Dimensions—Stratix 5410 Switches

To prevent the switch from overheating, observe the following minimum clearances:

- Top and bottom: 44.45 mm (1.75 in.)
- Sides: 50.8 mm (2.0 in.)
- Front: 50.8 mm (2.0 in.)

These diagrams are representative of the Stratix 5410 switches. Actual faceplates vary depending on the catalog number.

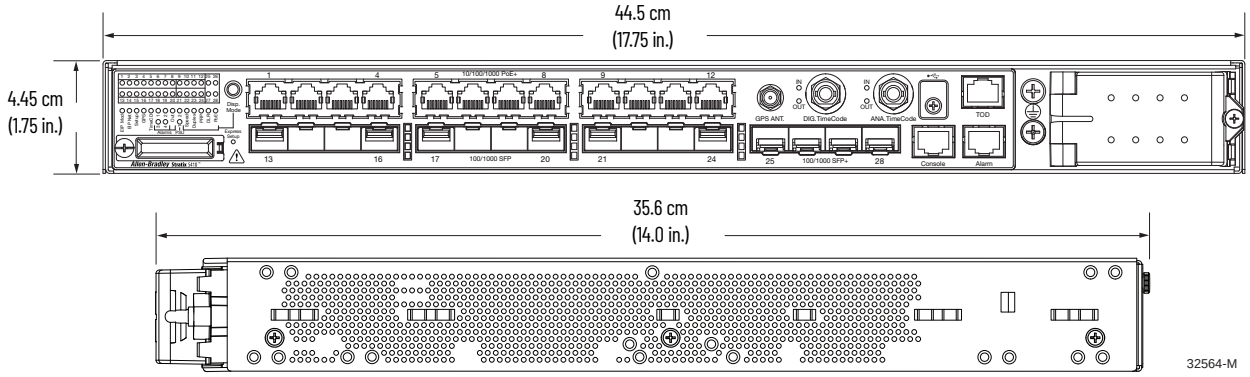

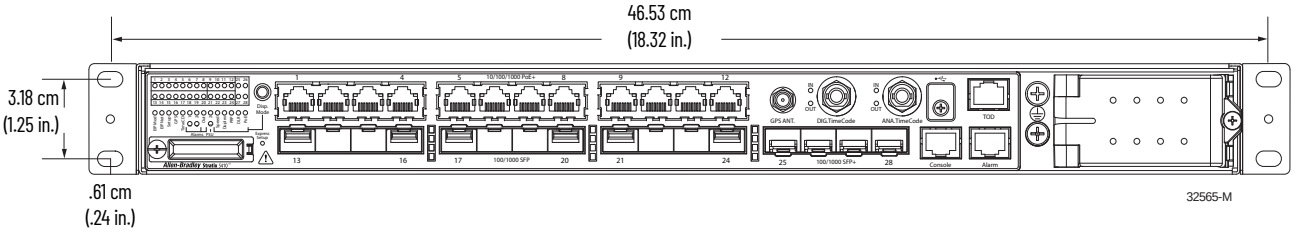

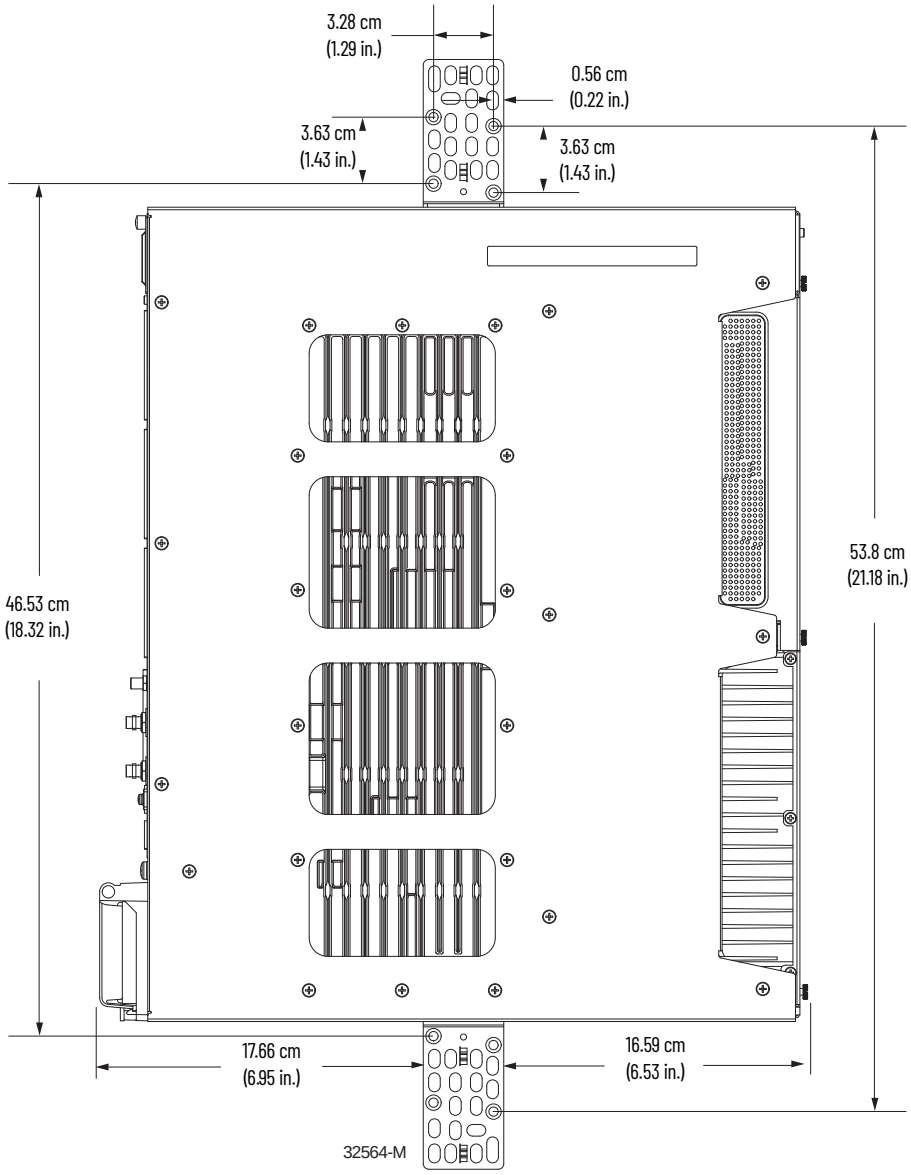
3.28 cm
(1.29 in.)
0.56 cm
(0.22 in.)
3.63 cm
(1.43 in.)
3.63 cm
(1.43 in.)
46.53 cm
(18.32 in.)
53.8 cm
(21.18 in.)
17.66 cm
(6.95 in.)
16.59 cm
(6.53 in.)
32564-M

Stratix 5700 Ethernet Managed Switches

Cat. No.	Total Ports	RJ45 Ports(1)	Combo Ports	PoE/PoE+ Ports	SFP Slots	Firmware Type	CIP Sync (IEEE 1588)	NAT	DLR	Conformal Coating
1783-BMS4S2SGL	6	—	—	—	4 FE + 2 GE	Lite	—	—	—	—
1783-BMS4S2SGA	6	—	—	—	4 FE + 2 GE	Full	—	—	—	—
1783-BMS06SL	6	4 FE	—	—	2 FE	Lite	—	—	—	—
1783-BMS06SA	6	4 FE	—	—	2 FE	Full	—	—	—	—
1783-BMS06TL	6	6 FE	—	—	—	Lite	—	—	—	—
1783-BMS06TA	6	6 FE	—	—	—	Full	—	—	—	—
1783-BMS06SGL	6	4 FE	—	—	2 GE	Lite	—	—	—	—
1783-BMS06SGA	6	4 FE	—	—	2 GE	Full	—	—	—	—
1783-BMS06TGL	6	4 FE + 2 GE	—	—	—	Lite	—	—	—	—
1783-BMS06TGA	6	4 FE + 2 GE	—	—	—	Full	—	—	—	—
1783-BMS10CL	10	8 FE	2 FE	—	—	Lite	—	—	—	—
1783-BMS10CA	10	8 FE	2 FE	—	—	Full	—	—	—	—
1783-BMS10CGL	10	8 FE	2 GE	—	—	Lite	—	—	—	—
1783-BMS10CGA	10	8 FE	2 GE	—	—	Full	—	—	—	—
1783-BMS10CGP	10	8 FE	2 GE	—	—	Full	Yes	—	Yes	—
1783-BMS10CGN	10	8 FE	2 GE	—	—	Full	Yes	Yes	Yes	—
1783-BMS12T4E2CGL	18	12 FE	2 GE	4 FE	—	Lite	—	—	Yes	—
1783-BMS12T4E2CGP	18	12 FE	2 GE	4 FE	—	Full	Yes	—	Yes	—
1783-BMS12T4E2CGNK	18	12 FE	2 GE	4 FE	—	Full	Yes	Yes	Yes	Yes
1783-BMS20CL	20	16 FE	2 FE	—	2 FE	Lite	—	—	Yes	—
1783-BMS20CA	20	16 FE	2 FE	—	2 FE	Full	—	—	Yes	—
1783-BMS20CGL	20	16 FE	2 GE	—	2 FE	Lite	—	—	Yes	—
1783-BMS20CGP	20	16 FE	2 GE	—	2 FE	Full	Yes	—	Yes	—
1783-BMS20CGN	20	16 FE	2 GE	—	2 FE	Full	Yes	Yes	Yes	—
1783-BMS20CGPK	20	16 FE	2 GE	—	2 FE	Full	Yes	—	Yes	Yes

(1) FE = Fast Ethernet; GE = Gigabit Ethernet.

Table 21 - Technical Specifications - Stratix 5700 Switches

Attribute	1783-BMS06SL, 1783-BMS06SA, 1783-BMS06TL, 1783-BMS06TA, 1783-BMS06SGL, 1783-BMS06SGA, 1783-BMS06TGL, 1783-BMS06TGA	1783-BMS10CL, 1783-BMS10CA, 1783-BMS10CGL, 1783-BMS10CGA	1783-BMS10CGN, 1783-BMS10CGP	1783-BMS20CL, 1783-BMS20CA, 1783-BMS20CGL, 1783-BMS20CGP, 1783-BMS20CGN, 1783-BMS20CGPK	1783-BMS4S2SGL, 1783-BMS4S2SGA
Alarm relay	1 A @ 30V DC or 0.5 A @ 48V DC				
Power input	0.5...2.0 A max @ 12...48V DC Class 2/SELV			0.5...3.0 A max @ 12...48V DC Class 2/SELV	0.5...2.0 A max @ 12...48V DC Class 2/SELV
Power consumption	9.5 W @ 24V DC @ 40 °C (104 °F) 15 W max	12.5 W @ 24V DC/40 °C (104 °F) 17 W max	15 W @ 24V DC/ 40 °C (104 °F) 20 W max	21 W @ 24V DC/40 °C (104 °F) 30 W max	12.5 W @ 24V DC/40 °C (104 °F) 14 W max
Power dissipation	15 W	17 W	20 W	30 W	14 W

Table 21 - Technical Specifications - Stratix 5700 Switches (Continued)

Attribute	1783-BMS06SL, 1783-BMS06SA, 1783-BMS06TL, 1783-BMS06TA, 1783-BMS06SGL, 1783-BMS06SGA, 1783-BMS06TGL, 1783-BMS06TGA	1783-BMS10CL, 1783-BMS10CA, 1783-BMS10CGL, 1783-BMS10CGA	1783-BMS10CGN, 1783-BMS10CGP	1783-BMS20CL, 1783-BMS20CA, 1783-BMS20CGL, 1783-BMS20CGP, 1783-BMS20CGN, 1783-BMS20CGPK	1783-BMS4S2SGL, 1783-BMS4S2SGA
Isolation voltage	50V (continuous), basic insulation type, DC power ports to ground, DC power ports to Ethernet ports, and DC power ports to alarm ports No isolation between individual Ethernet ports No isolation between console port and system Type tested at 850V DC for 60 s				60V (continuous), basic insulation type, DC power ports to ground, alarm ports to ground, and DC power ports to alarm ports No isolation between console port and system Type tested at 707V DC for 60 s
Wire size, Ethernet connection[1]	RJ45 connector according to IEC 60603-7, 2- or 4-pair Category 5e minimum cable according to TIA 568-B.1 or Category 5 cable according to ISO/IEC 24702				—
Wire size, DC power connection	0.5...0.8 mm^2 (20...18 AWG) solid or stranded copper wire rated at 75 °C (167 °F) or greater, 1.2 mm (3/64 in.) insulation max, 6.3 mm (0.25 in.) ±0.5 mm (0.02 in.) strip length				
Wire size, alarm connection	0.5...0.8 mm^2 (20...18 AWG) solid or stranded, UL/CSA-rated style 1007 or 1569 twisted-pair copper appliance wiring material (AWM) wire, 6.3 mm (0.25 in.) ±0.5 mm (0.02 in.) strip length				
Wire size, ground connection	4.0 mm^2 (12 AWG) min, stranded copper wire				
Screw torque, power and alarm terminals	0.23 N•m (2.0 in•lb)				0.23 N•m (2.0 in•lb)
Screw torque, ground terminal, max	0.96 N•m (8.5 in•lb)				0.4 N•m (3.5 in•lb)
Weight, approx	1.11 kg (2.45 lb)	1.25 kg (2.75 lb)	1.38 kg (3.05 lb)	2.04 kg (4.50 lb)	1.22 kg (2.69 lb)
Wiring category[2]	3 - on console and alarm ports 2 - on DC power ports 2 - on Ethernet ports				3 - on console ports 2 - on DC power and alarm ports
Enclosure type rating	None (open-style)				
Pilot duty rating	Alarm not rated				
North American temp code	T4				
IEC temp code	T4				
SFP modules[3]	1783-SFP100FX 1783-SFP100LX 1783-SFP100EXC 1783-SFP100ZXC 1783-SFP100T[4] 1783-SFP1GSX[5] 1783-SFP1GLX[5] 1783-SFP1GEXE[5] 1783-SFP1GZX[5] 1783-SFP1GTE[5]				
Memory card	1784-SD1				
Industry standards	Substation KEMA (IEEE 1613, IEC 61850 - 3) IEEE 1613 Electric Power Stations Communications Networking IEC 61850-3 Electric Substations Communications Networking				

(1) See page 83 for recommended products.
(2) Use this conductor category information for planning conductor routing. Refer to Industrial Automation Wiring and Grounding Guidelines, publication 1770-4.1.
(3) SFP modules are supported only on switches with combo ports or SFP slots. For SFP specifications, see page 81.
(4) The 1783-SFP100T module requires Stratix 5700 firmware revision 8.001or later.
(5) Gigabit Ethernet (GE) SFP modules work only in GE SFP slots. For a list of Stratix 5700 catalog numbers with GE SFP slots, see page 34.

Table 22 - Environmental Specifications - Stratix 5700 Switches

Attribute	1783-BMS06SL, 1783-BMS06SA, 1783-BMS06TL, 1783-BMS06TA, 1783-BMS06SGL, 1783-BMS06SGA, 1783-BMS06TGL, 1783-BMS06TGA, 1783-BMS10CL, 1783-BMS10CA, 1783-BMS10CGL, 1783-BMS10CGA, 1783-BMS10CGN, 1783-BMS10CGP, 1783-BMS20CL, 1783-BMS20CA, 1783-BMS20CGL, 1783-BMS20CGP, 1783-BMS20CGN, 1783-BMS20CGPK	1783-BMS4S2SGL, 1783-BMS4S2SGA
Temperature, operating IEC 60068-2-1 (Test Ad, Operating Cold), IEC 60068-2-2 (Test Bd, Operating Dry Heat), IEC 60068-2-14 (Test Nb, Operating Thermal Shock)	-40...+60 °C (-40...+140 °F)	
Temperature, surrounding air, max	60 °C (140 °F)	
Temperature, nonoperating IEC 60068-2-1 (Test Ab, Unpackaged Nonoperating Cold), IEC 60068-2-2 (Test Bb, Unpackaged Nonoperating Dry Heat), IEC 60068-2-14 (Test Na, Unpackaged Nonoperating Thermal Shock)	-40...85 °C (-40...185 °F)	
Relative humidity IEC 60068-2-30 (Test Db, Unpackaged Damp Heat)	5...95% noncondensing	
Vibration IEC 60068-2-6 (Test Fc, Operating)	2 g @ 10...500 Hz	
Shock, operating IEC 60068-2-27 (Test Ea, Unpackaged Shock)	30 g	
Shock, nonoperating IEC 60068-2-27 (Test Ea, Unpackaged Shock)	55 g	50 g
Emissions CISPR11 (IEC 61000-6-4)	Class A	
ESD immunity IEC 61000-4-2	8 kV contact discharges 15 kV air discharges	6 kV contact discharges 8 kV air discharges
Radiated RF immunity IEC 61000-4-3	20V/m with 1 kHz sine-wave 80% AM from 80...1000 MHz 20V/m with 200 Hz 50% pulse 100% AM at 900 MHz 10V/m with 1 kHz sine-wave 80% AM from 1000...2700 MHz	20V/m with 1 kHz sine-wave 80% AM from 80...2000 MHz 10V/m with 200 Hz 50% pulse 100% AM at 900 MHz 10V/m with 200 Hz 50% pulse 100% AM at 1890 MHz 20V/m with 1 kHz sine-wave 80% AM from 2000...2700 MHz
EFT/B immunity IEC 61000-4-4	±4 kV at 5 kHz and ±2 kV at 100 kHz on DC power ports ±4 kV at 2.5 kHz, ±2 kV at 5 kHz, and ±1 kV at 100 kHz on alarm ports ±4 kV at 2.5 kHz, ±2 kV at 5 kHz, and ±1 kV at 100 kHz on Ethernet ports	±4 kV at 2.5, 5, and 100 kHz on DC power ports ±4 kV at 2.5, 5, and 100 kHz on alarm ports
Surge transient immunity IEC 61000-4-5	±1 kV line-line (DM) and ±2 kV line-earth (CM) on DC power ports ±2 kV line-earth (CM) on Ethernet ports	±1 kV line-line (DM) and ±2 kV line-earth (CM) on DC power ports ±1 kV line-line (DM) and ±2 kV line-earth (CM) on alarm ports
Conducted RF immunity IEC 61000-4-6	10V rms with 1 kHz sine-wave 80% AM from 150 kHz...80 MHz	
Magnetic field immunity IEC 61000-4-8	—	300A/m long duration at 50 and 60 Hz 1000A/m short duration at 50 and 60 Hz
Magnetic pulse immunity IEC 61000-4-9	—	300A/m pulse
Voltage variation IEC 61000-4-29	10 ms interruption on DC power ports	
Damped oscillatory wave immunity IEC 61000-4-18	±1 kV line-line (DM) and ±2.5 kV line-earth (CM) on power ports	±1 kV line-line (DM) and ±2.5 kV line-earth (CM) on DC power ports at 1 MHz and 100 kHz ±1 kV line-line (DM) and ±2.5 kV line-earth (CM) on alarm ports at 1 MHz and 100 kHz
Environmental rating	IP30	

Stratix 5700 PoE Switches

Table 23 - Technical Specifications - Stratix 5700 PoE Switches

Attribute	1783-BMS12T4E2CGL, 1783-BMS12T4E2CGP, 1783-BMS12T4E2CGNK	
Ethernet data rate	10/100 Mbps	
Alarm relay	30V DC, 1 A or 48V DC, 0.5 A	
Switch power input, max	12...48V DC, 0.5...3.0 A, Class 2/SELV	
PoE power input(1)	44...57V DC, 2.5 A max	
PoE+ power input(1)	50...57V DC, 2.5 A max	
Power consumption(2)	15 W @ 24V DC 40 °C (104 °F), 30 W max	
Power dissipation	30 W	
Isolation voltage	60V (continuous), basic insulation type, DC power ports to ground, and PoE power ports to ground No isolation between individual Ethernet ports No isolation between PoE power and Ethernet ports No isolation between console port and system Type tested at 1585V DC for 60 s	
Wire size, Ethernet connection(3)	RJ45 connector according to IEC 60603-7, 2- or 4-pair Category 5e minimum cable according to TIA 568-B.1 or Category 5 cable according to ISO/IEC 24702	
Wire size, DC power connection	0.5...0.8 mm^2 (20...18 AWG) solid or stranded copper wire rated at 75 °C (167 °F) or greater, 1.2 mm (3/64 in.) insulation max, 6.3 mm (0.25 in.) ±0.5 mm (0.02 in.) strip length	
Wire size, alarm connection	0.5...0.8 mm^2 (20...18 AWG) solid or stranded, UL/CSA-rated style 1007 or 1569 twisted-pair copper appliance wiring material (AWM) wire, 6.3 mm (0.25 in.) ±0.5 mm (0.02 in.) strip length	
Wire size, ground connection	4.0 mm^2 (12 AWG) min, stranded copper wire	
Screw torque, power and alarm terminals	0.23 N•m (2.0 in•lb)	
Screw torque, ground terminals, max	0.96 N•m (8.5 in•lb)	
Weight, approx	1.11 kg (2.45 lb)	
Wiring category(4)	3 - on console and alarm ports 2 - on DC power ports 2 - on Ethernet ports	
Pilot duty rating	Alarm not rated	
Enclosure type rating	None (open-style)	
North American temp code	T4	
IEC temp code	T4	
SFP modules(5)	1783-SFP100FX 1783-SFP100LX 1783-SFP100EXC 1783-SFP100ZXC 1783-SFP100T(6)	1783-SFP1GSX(7) 1783-SFP1GLX(7) 1783-SFP1GEXE(7) 1783-SFP1GZX(7) 1783-SFP1GTE(7)
Memory card	1784-SD1	
Industry standards	Substation KEMA (IEEE 1613, IEC 61850 - 3) IEEE 1613 Electric Power Stations Communications Networking IEC 61850-3 Electric Substations Communications Networking	

(1) The initial power allocation and the maximum power allocation on a PoE port are configurable in Device Manager or the Logix Designer application. For details about PoE power budgets, see the Stratix Managed Switches User Manual, publication 1783-UM007.

(2) For PoE configurations, the power consumption values listed represent the highest values that can be configured using all ports. A general guideline is 0.5 W per 30 W PoE+ port used.
(3) See page 83 for recommended products.
(4) Use this conductor category information for planning conductor routing. Refer to Industrial Automation Wiring and Grounding Guidelines, publication 1770-4.1.
(5) SFP modules are supported only on switches with combo ports or SFP slots. For SFP specifications, see page 81.
(6) The 1783-SFP100T module requires Stratix 5700 firmware revision 8.001or later.
(7) Gigabit Ethernet (GE) SFP modules work only in GE SFP slots. For a list of Stratix 5700 catalog numbers with GE SFP slots, see page 34.

Table 24 - Environmental Specifications - Stratix 5700 PoE Switches

Attribute	1783-BMS12T4E2CGL, 1783-BMS12T4E2CGP, 1783-BMS12T4E2CGNK
Temperature, operating IEC 60068-2-1 (Test Ad, Operating Cold), IEC 60068-2-2 (Test Bd, Operating Dry Heat), IEC 60068-2-14 (Test Nb, Operating Thermal Shock)	-40...+60 °C (-40...+140 °F)
Temperature, surrounding air, max	60 °C (140 °F)
Temperature, nonoperating IEC 60068-2-1 (Test Ab, Unpackaged Nonoperating Cold), IEC 60068-2-2 (Test Bb, Unpackaged Nonoperating Dry Heat), IEC 60068-2-14 (Test Na, Unpackaged Nonoperating Thermal Shock)	-40...+85 °C (-40...+185 °F)
Relative humidity IEC 60068-2-30 (Test Db, Unpackaged Damp Heat)	5...95% noncondensing
Vibration IEC 60068-2-6 (Test Fc, Operating)	2 g @ 10...500 Hz
Shock, operating IEC 60068-2-27 (Test Ea, Unpackaged Shock)	30 g
Shock, nonoperating IEC 60068-2-27 (Test Ea, Unpackaged Shock)	50 g
Emissions CISPR11 (IEC 61000-6-4)	Class A
ESD immunity IEC 61000-4-2	6 kV contact discharges 8 kV air discharges
Radiated RF immunity IEC 61000-4-3	10V/m with 1 kHz sine-wave 80% AM from 80...2000 MHz 10V/m with 200 Hz 50% pulse 100% AM at 900 MHz 10V/m with 200 Hz 50% pulse 100% AM at 1890 MHz 1V/m with 1 kHz sine-wave 80% AM from 1000...2700 MHz
EFT/B immunity IEC 61000-4-4	±4 kV at 5 kHz on DC power ports ±4 kV at 5 kHz on alarm ports ±4 kV at 5 kHz on Ethernet ports
Surge transient immunity IEC 61000-4-5	±1 kV line-line (DM) and ±2 kV line-earth (CM) on DC power ports ±2 kV line-earth (CM) on Ethernet ports
Conducted RF immunity IEC 61000-4-6	10V rms with 1 kHz sine-wave 80% AM from 150 kHz...80 MHz
Damped oscillatory wave immunity IEC 61000-4-18	±1 kV line-line (DM) and ±2.5 kV line-earth (CM) on power ports

Table 25 - Certifications - Stratix 5700 Switches

Certifications (when product is marked)[1]	Stratix 5700 Switches
c-UL-us	UL Listed Industrial Control Equipment, certified for US and Canada. See UL File E65584. UL Listed for Class I, Division 2 Group A,B,C,D Hazardous Locations, certified for U.S. and Canada. See UL File E194810. UL Listed for Class I, Zone 2 Hazardous Locations, certified for U.S. and Canada. See UL File E194810. AEx/Ex nA nC IIC T4 Gc X
CCC	CCC 2020012310358977 CNCA-C23-01 强制性产品认证实施规则 防爆电气 CNCA-C23-01 CCC Implementation Rule Explosion-Proof Electrical Products
CE	European Union 2004/108/EC EMC Directive, compliant with: • EN 61326-1; Meas./Control/Lab., Industrial Requirements • EN 61000-6-2; Industrial Immunity • EN 61000-6-4; Industrial Emissions • EN 61131-2; Programmable Controllers (Clause 8, Zone A & B) European Union 2011/65/EU RoHS, compliant with: • EN 50581; Technical Documentation
RCM	Australian Radiocommunications Act, compliant with: • AS/NZS CISPR 11; Industrial Emissions
Ex	European Union 94/9/EC ATEX Directive, compliant with: • EN 60079-15; Potentially Explosive Atmospheres, Protection "n" • EN 60079-0; General Requirements • II 3 G Ex nA nC IIC T4 Gc X
KC	Korean Registration of Broadcasting and Communications Equipment, compliant with: • Article 58-2 of Radio Waves Act, Clause 3
EtherNet/IP	ODVA conformance tested to EtherNet/IP specifications
Anatel	Brazilian regulations (Federal Law 9472/97)
EAC	Russian Customs Union TR CU 020 EMC Technical Regulation
BSMI	CNS 13438 (95); CNS14336-1 (99) Taiwan

(1) See the Product Certification link at http://www.ab.com for declarations of conformity, certificates, and other certification details.

Dimensions—Stratix 5700 Switches

To prevent the switch from overheating, observe the following minimum clearances:

- Top and bottom: 50.8 mm (2.0 in.)
- Sides: 50.8 mm (2.0 in.)
- Front: 50.8 mm (2.0 in.)

These diagrams are representative of the Stratix 5700 switches. Actual faceplates vary depending on the catalog number.

6 SFP-port Switches
1783-BMS4S2SGL, 1783-BMS4S2SGA

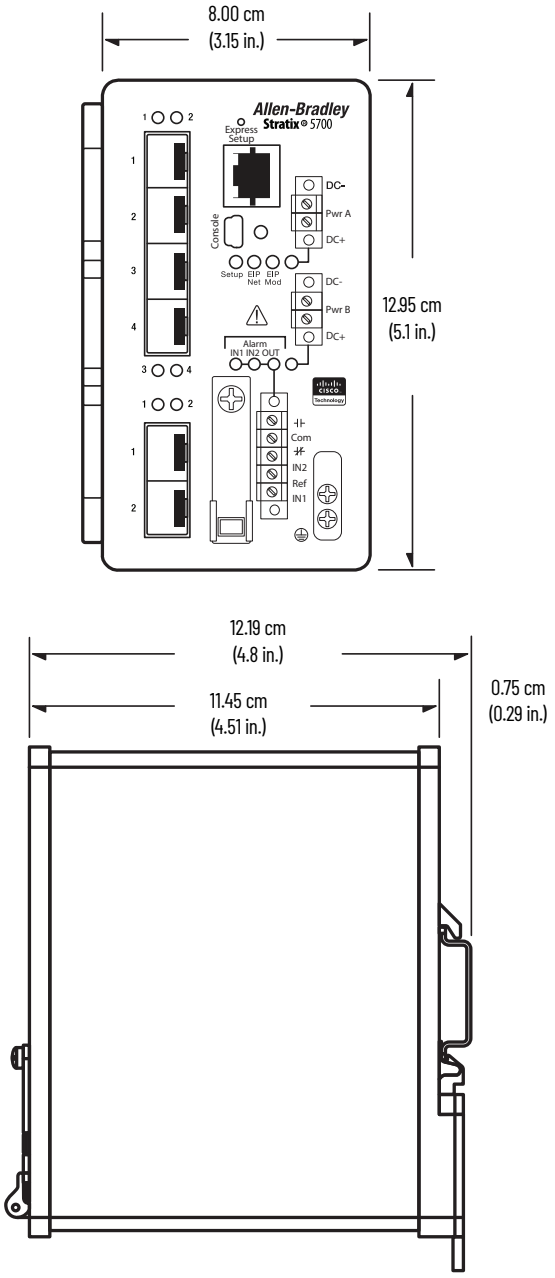

6-port Switches
1783-BMSO6SL, 1783-BMSO6SA, 1783-BMSO6TL, 1783-BMSO6TA,
1783-BMSO6SGL, 1783-BMSO6SGA, 1783-BMSO6TGL, 1783-BMSO6TGA

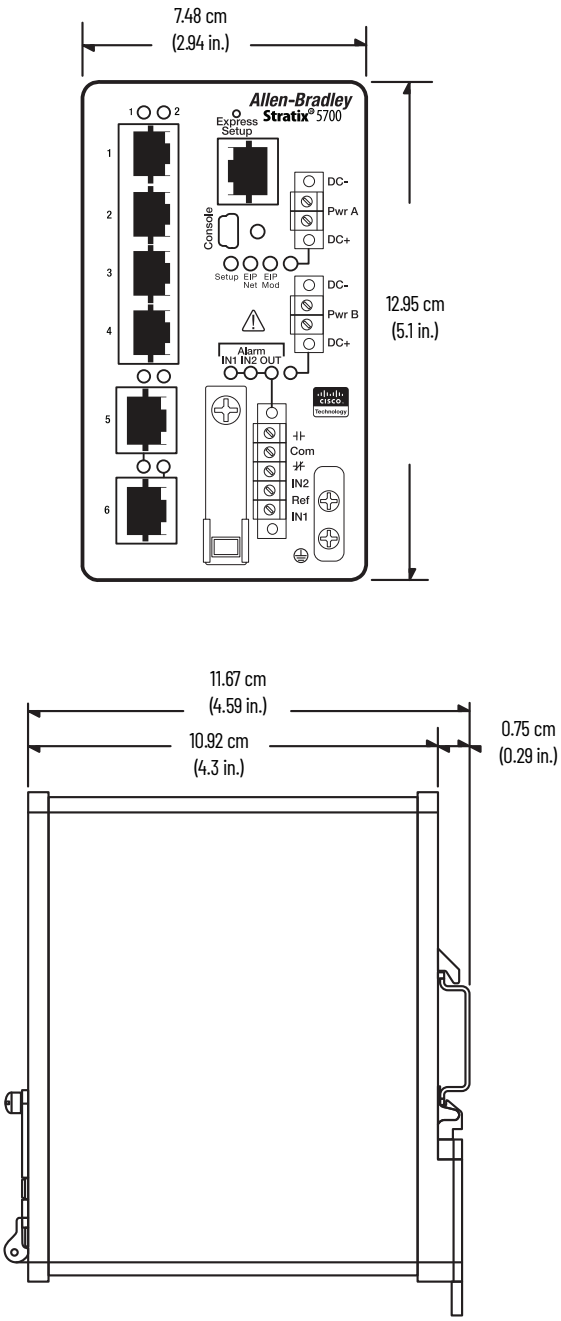

10-port Switches
1783-BMS10CL, 1783-BMS10CA,
1783-BMS10CGL, 1783-BMS10CGA

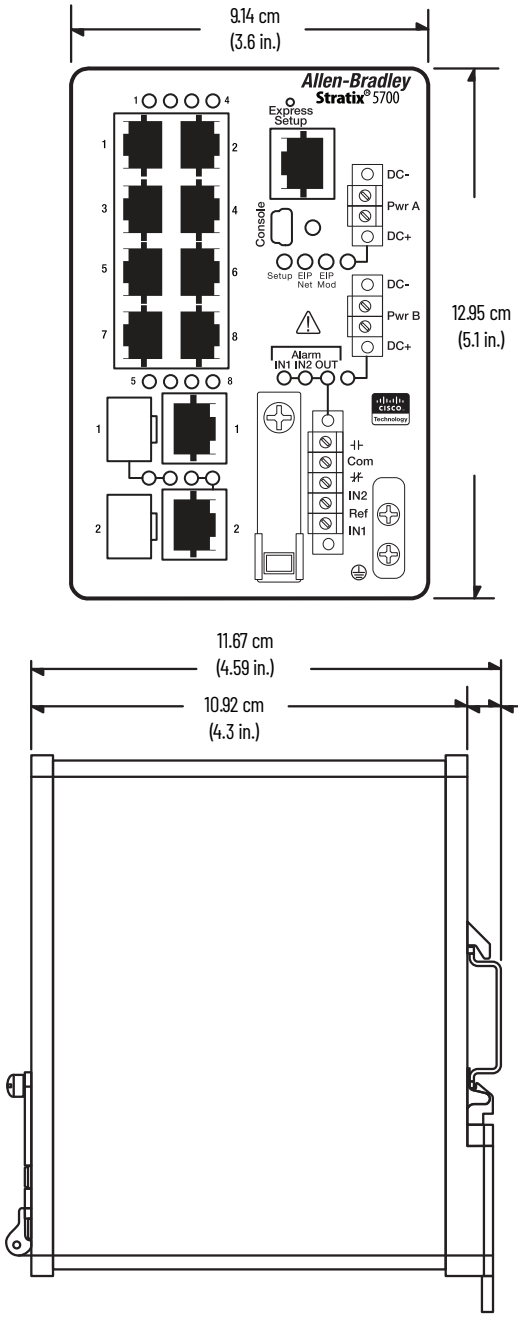

10-port Switch
1783-BMS10CGP, 1783-BMS10CGN

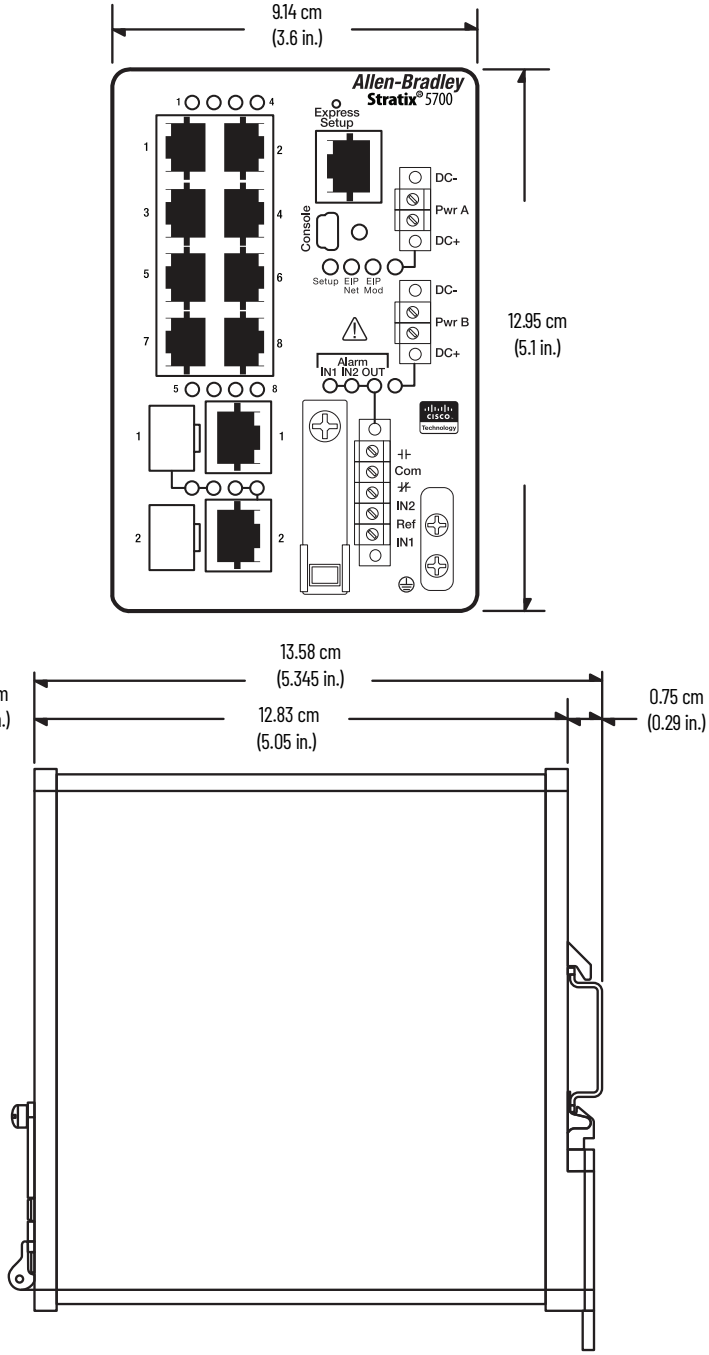

18-port and 20-port Switches
1783-BMS12T4E2CGNK, 1783-BMS12T4E2CGP, 1783-BMS12T4E2CGL, 1783-BMS20CL,
1783-BMS20CA, 1783-BMS20CGL, 1783-BMS20CGP, 1783-BMS20CGN, 1783-BMS20CGPK

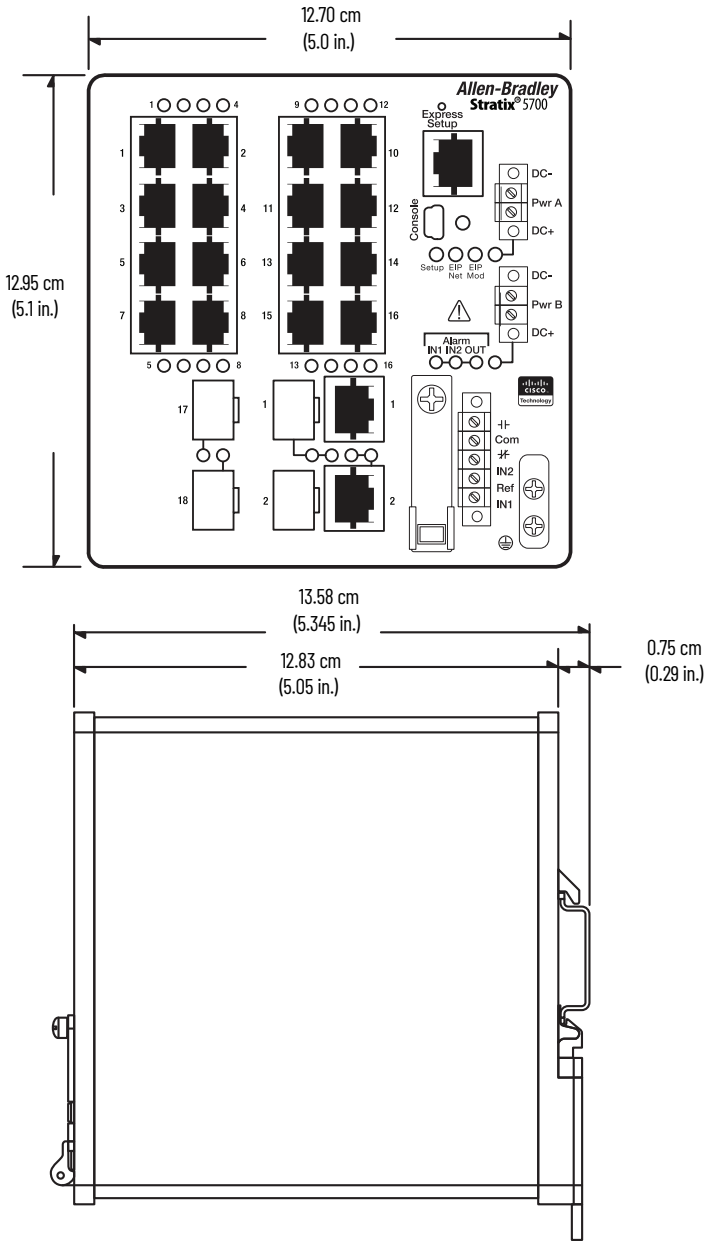

ArmorStratix 5700 Ethernet Managed Switches

Cat. No.	Total Ports	M12 D-code Ports	M12 X-code Ports	PoE/PoE+ Ports	Firmware Type	CIP Sync (IEEE 1588)	NAT	DLR
1783-ZMS8TA	8	8 FE	—	—	Full	—	—	—
1783-ZMS4T4E2TGP	10	4 FE	2 GE	4 FE	Full	Yes	—	Yes
1783-ZMS4T4E2TGN	10	4 FE	2 GE	4 FE	Full	Yes	Yes	Yes
1783-ZMS16TA	16	16 FE	—	—	Full	—	—	—
1783-ZMS8T8E2TGP	18	8 FE	2 GE	8 FE	Full	Yes	—	Yes
1783-ZMS8T8E2TGN	18	8 FE	2 GE	8 FE	Full	Yes	Yes	Yes
1783-ZMS24TA	24	24 FE	—	—	Full	—	—	—

Table 26 - Technical Specifications - ArmorStratix 5700 Switches

Attribute	1783-ZMS8TA	1783-ZMS16TA	1783-ZMS24TA	1783-ZMS4T4E2TGP, 1783-ZMS4T4E2TGN	1783-ZMS8T8E2TGP, 1783-ZMS8T8E2TGN
Power input	1.5 A max @ 12...48V DC	1.8 A max @ 12...48V DC	2.0 A max @ 12...48V DC	User supply (non PoE): 9.6...60V DC, 2.9 A max Alarm: 30V DC, 1 A or 48V DC, 0.5 A	User supply (non PoE): 9.6...60V DC, 3.3 A max Alarm: 30V DC, 1 A or 48V DC, 0.5 A
PoE power input(1)	—			44...57V DC (48V DC nom) for PoE 50...57V DC (54V DC nom) for PoE+ or a combination of PoE/PoE+	
Power consumption, max(2)	7 W @ 24V DC @ 40°C (104°F) 17 W	10 W @ 24V DC @ 40°C (104°F) 20 W	12 W @ 24V DC @ 40°C (104°F) 22 W	11.5 W @ 24V DC @ 40°C (104°F) 22 W max Max PoE power @ 50V: 62 W	17 W @ 24V DC @ 40°C (104°F) 30 W Max PoE power @ 50V: 120 W
Power dissipation	17 W	20 W	22 W	21 W	24 W
Isolation voltage	60V (continuous), basic insulation type, DC power ports to ground, and PoE power ports to ground No isolation between individual Ethernet ports No isolation between PoE power and Ethernet ports No isolation between console port and system Type tested at 1570V DC for 60 s				
Wire size, ground connection	4.0 mm^2 (12 AWG) min, stranded copper wire				
Wire size, Ethernet connection(3)	IP67-rated M12 D-code or X-code connectors according to ODVA EtherNet/IP specifications and ISO/IEC 24702/61918				
Screw torque, ground terminal, max	1.13 N•m (10.0 in•lb)				
Weight, approx	3 kg (7.19 lb)	3 kg (7.28 lb)	4 kg (8.86 lb)	3 kg (7.19 lb)	3 kg (7.28 lb)
Wiring category(4)	3 - on console 2 - on DC power ports 2 - on Ethernet ports			3 - on console 2 - on DC power and alarm ports 2 -on Ethernet ports	
Pilot duty rating	—	—	—	Alarm not rated	
Enclosure type rating	Meets IP66, IP67, and Type 4				
Industry standards	Substation KEMA (IEEE 1613, IEC 61850 - 3) IEEE 1613 Electric Power Stations Communications Networking IEC 61850-3 Electric Substations Communications Networking				

(1) The initial power allocation and the maximum power allocation on a PoE port are configurable in Device Manager or the Logix Designer application. For details about PoE power budgets, see the Stratix Managed Switches User Manual, publication 1783-UM007.

(2) For PoE configurations, the power consumption values listed represent the highest values that can be configured using all ports. A general guideline is 0.5 W per 30 W PoE+ port used.
(3) See page 83 for recommended products.
(4) Use this conductor category information for planning conductor routing. Refer to Industrial Automation Wiring and Grounding Guidelines, publication 1770-4.1.

Table 27 - Environmental Specifications - ArmorStratix 5700 Switches

Attribute	1783-ZMS8TA, 1783-ZMS16TA, 1783-ZMS24TA	1783-ZMS4T4E2TGP, 1783-ZMS8T8E2TGP, 1783-ZMS4T4E2TGN, 1783-ZMS8T8E2TGN
Temperature, operating IEC 60068-2-1 (Test Ad, Operating Cold), IEC 60068-2-2 (Test Bd, Operating Dry Heat), IEC 60068-2-14 (Test Nb, Operating Thermal Shock)	-40...+60 °C (-40...+140 °F)	
Temperature, ambient, max	60 °C (140 °F)	
Temperature, nonoperating IEC 60068-2-1 (Test Ab, Unpackaged Nonoperating Cold), IEC 60068-2-2 (Test Bb, Unpackaged Nonoperating Dry Heat), IEC 60068-2-14 (Test Na, Unpackaged Nonoperating Thermal Shock)	-40...+85 °C (-40...+185 °F)	
Relative humidity IEC 60068-2-30 (Test Db, Unpackaged Damp Heat)	5...95% noncondensing	
Vibration IEC 60068-2-6 (Test Fc, Operating)	2 g @ 10...500 Hz	
Shock, operating IEC 60068-2-27 (Test Ea, Unpackaged Shock)	15 g	
Shock, nonoperating IEC 60068-2-27 (Test Ea, Unpackaged Shock)	30 g	
Emissions CISPR11 (IEC 61000-6-4)	Class A	
ESD immunity IEC 61000-4-2	8 kV contact discharges 15 kV air discharges	
Radiated RF immunity IEC 61000-4-3	20V/m with 1 kHz sine-wave 80% AM from 80...2000 MHz 10V/m with 200 Hz 50% Pulse 100% AM at 900 MHz 10V/m with 200 Hz 50% Pulse 100% AM at 1890 MHz 20V/m with 1 kHz sine-wave 80% AM from 2000...2700 MHz	
EFT/B immunity IEC 61000-4-4	±4 kV at 5 kHz on DC power ports ±4 kV at 5 kHz on Ethernet ports	±4 kV at 5 kHz on DC power ports ±4 kV at 5 kHz on Ethernet ports ±4 kV at 5 kHz on alarm ports
Surge transient immunity IEC 61000-4-5	±1 kV line-line (DM) and ±2 kV line-earth (CM) on DC power ports ±4 kV line-earth (CM) on Ethernet ports	±1 kV line-line (DM) and ±2 kV line-earth (CM) on DC power ports ±4 kV line-earth (CM) on Ethernet ports ±1 kV line-line (DM) and ±2 kV line-earth (CM) on alarm ports
Conducted RF immunity IEC 61000-4-6	10V rms with 1 kHz sine-wave 80% AM from 150 kHz...80 MHz	
Magnetic field immunity IEC 6100-4-8	300 A/m long duration and 1000 A/m short duration at 50 Hz and 60 Hz	
Magnetic pulse immunity IEC 6100-4-9	300 A/m pulse	
Damped oscillatory wave immunity IEC 61000-4-18	±1 kV line-line (DM) and ±2.5 kV line-earth (CM) on DC power ports ±2.5 kV line-earth (CM) on Ethernet ports	±1 kV line-line (DM) and ±2.5 kV line-earth (CM) on DC power and alarm ports ±2.5 kV line-earth (CM) on Ethernet ports
Environmental rating	IP66, IP67	

Table 28 - Certifications—ArmorStratix 5700 Switches

Certifications (when product is marked)[1]	1783-ZMS8TA, 1783-ZMS16TA, 1783-ZMS24TA	1783-ZMS4T4E2TGP, 1783-ZMS8T8E2TGP, 1783-ZMS4T4E2TGN, 1783-ZMS8T8E2TGN
c-UL-us	UL Listed Industrial Control Equipment, certified for US and Canada. See UL File E65584.	
CCC	CCC 2020012310358977 CNCA-C23-01 强制性产品认证实施规则 防爆电气 CNCA-C23-01 CCC Implementation Rule Explosion-Proof Electrical Products	
CE	European Union 2004/108/EC EMC Directive, compliant with: • EN 61326-1; Meas./Control/Lab., Industrial Requirements • EN 61000-6-2; Industrial Immunity • EN 61000-6-4; Industrial Emissions • EN 61131-2; Programmable Controllers (Clause 8, Zone A & B) European Union 2011/65/EU RoHS, compliant with: • EN 50581; Technical Documentation	
RCM	Australian Radiocommunications Act, compliant with: • EN 61000-6-4; Industrial Emissions	
Ex	UK Statutory Instrument 2016 No. 1107 and European Union 2014/34/EU ATEX Directive, compliant with: • EN IEC 60079-0; General Requirements • EN IEC 60079-7; Explosive Atmospheres, Protection "e" • II 3 G Ex ec nC IIC T4 Gc • DEMKO 12ATEX8694536X, UL22UKEX2598X	
UKCA	In conformity with the following UK Statutory Instruments and their amendments: • 2016 No. 1091, Electromagnetic Compatibility Regulations • 2016 No. 1101, Electrical Equipment (Safety) Regulations • 2016 No. 1107, Equipment and Protective Systems Intended for Use in Potentially Explosive Atmospheres Regulations • 2012 No. 3032, Restriction of the Use of Certain Hazardous Substances in Electrical and Electronic Equipment	
KC	Korean Registration of Broadcasting and Communications Equipment, compliant with: • Article 58-2 of Radio Waves Act, Clause 3	
EtherNet/IP	ODVA conformance tested to EtherNet/IP specifications	
Anatel	Brazilian regulations (Federal Law 9472/97)	
EAC	Russian Customs Union TR CU 020 EMC Technical Regulation	
BSMI	CNS 13438 (95); CNS14336-1 (99) Taiwan	

(1) See the Product Certification link at http://www.ab.com for declarations of conformity, certificates, and other certification details.

Dimensions—ArmorStratix 5700 Switches

To prevent the switch from overheating, observe the following minimum clearances:

- Top and bottom: 50.8 mm (2.0 in.)
- Sides: 50.8 mm (2.0 in.)
- Front: 50.8 mm (2.0 in.)

These diagrams are representative of the ArmorStratix 5700 switches. Actual faceplates vary depending on the catalog number.

8-port and 10-port Switches
1783-ZMS8TA, 1783-ZMS4T4E2TGP, 1783-ZMS4T4E2TGN

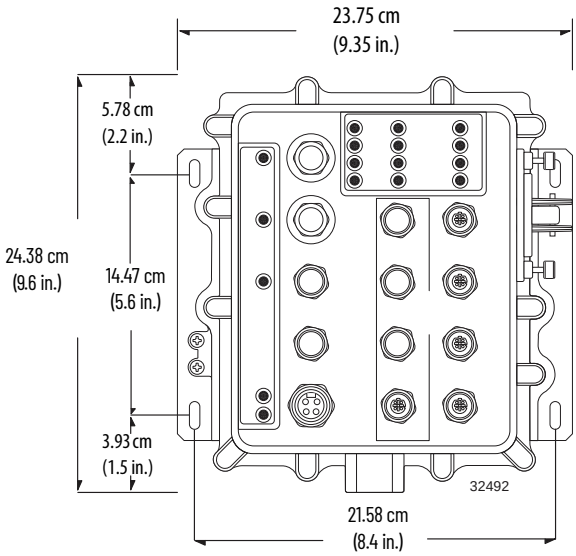

16-port and 18-port Switches
1783-ZMS16TA, 1783-ZMS8T8E2TGP, 1783-ZMS8T8E2TGN

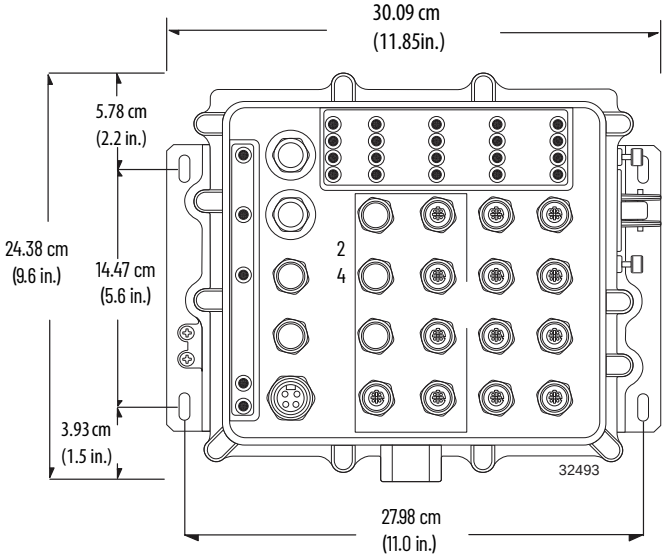

24-port Switch
1783-ZMS24TA

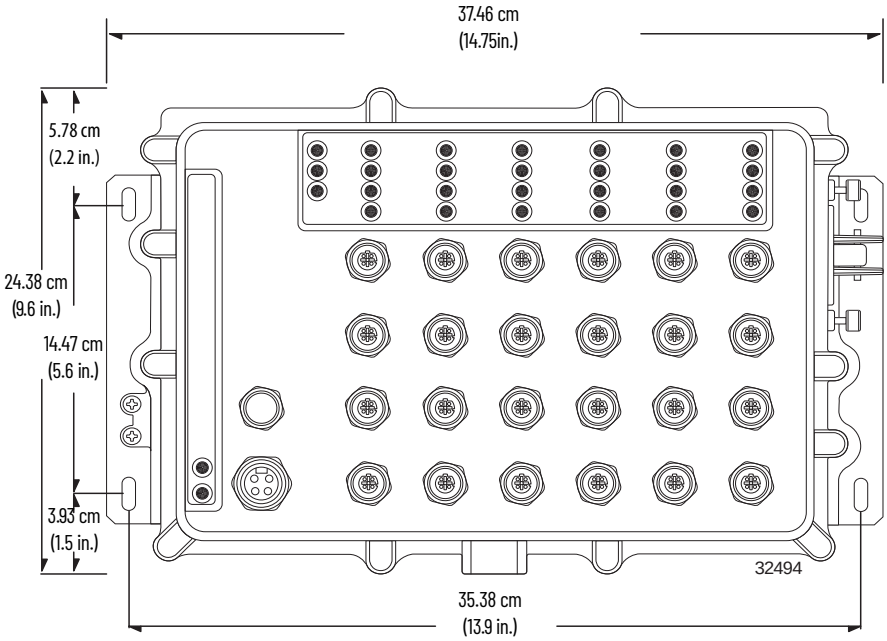

16-port and 24-port Switches
1783-ZMS16TA, 1783-ZMS24TA,
1783-ZMS8T8E2TGP, 1783-ZMS8T8E2TGN

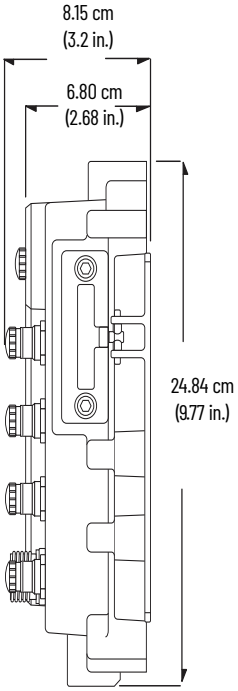

8-port and 10-port Switches
1783-ZMS8TA, 1783-ZMS4T4E2TGP,
1783-ZMS4T4E2TGN

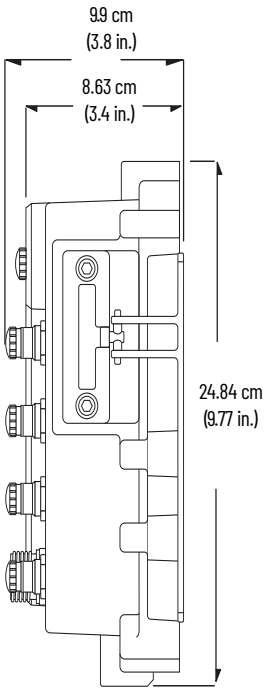

32496

All Switches

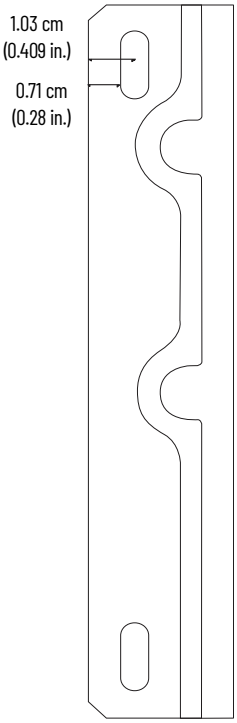

Stratix 5800 Ethernet Managed Switches and Expansion Modules

Cat. No.	Total Ports	RJ45 Ports(1)	PoE/PoE+ Ports(2)	SFP Slots	Modular	Firmware Type	Advanced Feature Support
Switches							
1783-MMS10B	10	8 GE	—	2 GE	No	Layer 2	No
1783-MMS10BE	10	—	8 GE	2 GE	No	Layer 2	No
1783-MMS10	10	8 GE	—	2 GE	Yes	Layer 2	No
1783-MMS10A	10	8 GE	—	2 GE	Yes	Layer 2	Yes
1783-MMS10E	10	—	8 GE	2 GE	Yes	Layer 2	No
1783-MMS10EA	10	—	8 GE	2 GE	Yes	Layer 2	Yes
1783-MMS10R	10	8 GE	—	2 GE	Yes	Layer 3	No
1783-MMS10AR		8 GE	—	2 GE	Yes	Layer 3	Yes
1783-MMS10ER	10	—	8 GE	2 GE	Yes	Layer 3	No
1783-MMS10EAR	10	—	8 GE	2 GE	Yes	Layer 3	Yes
Expansion Modules							
1783-MMX8T	8	8 GE	—	—	—	—	No
1783-MMX8TA	8	8 GE	—	—	—	—	Yes
1783-MMX8E	8	—	8 GE	—	—	—	No
1783-MMX8EA	8	—	8 GE	—	—	—	Yes
1783-MMX8S	8	—	—	8 GE	—	—	No
1783-MMX8SA	8	—	—	8 GE	—	—	Yes
1783-MMX6T2S	8	6 GE	—	2 GE	—	—	No
1783-MMX16T	16	16 GE	—	—	—	—	No
1783-MMX16E	16	—	16 GE	—	—	—	No
1783-MMX14T2S	16	14 GE	—	2 GE	—	—	No

(1) GE = Gigabit Ethernet
(2) There is a power budget of 360 W shared across PoE/PoE+ ports.

These restrictions apply to Stratix 5800 expansion modules:

- Only one expansion module can be mated to one modular switch.
- Expansion modules with PoE ports are supported only on modular switches with PoE ports.
- Expansion modules with advanced feature support are supported only on modular switches with advanced feature support.

Table 29 - Stratix 5800 Switches and Expansion Module Compatibility

Cat. No.	1783-MMX8T	1783-MMX8TA	1783-MMX8E	1783-MMX8EA	1783-MMX8S	1783-MMX8SA	1783-MMX6T2S	1783-MMX16T	1783-MMX16E	1783-MMX14T2S
1783-MMS10B	No expansion module support									
1783-MMS10BE	No expansion module support									
1783-MMS10	Supported	Not Supported	Not Supported	Not Supported	Supported	Not Supported	Supported	Supported	Not Supported	Supported
1783-MMS10A	Supported	Supported	Not Supported	Not Supported	Supported	Supported	Supported	Supported	Not Supported	Supported
1783-MMS10E	Supported	Not Supported	Supported	Not Supported	Supported	Not Supported	Supported	Supported	Supported	Supported
1783-MMS10EA	Supported	Supported	Supported	Supported	Supported	Supported	Supported	Supported	Supported	Supported
1783-MMS10R	Supported	Not Supported	Not Supported	Not Supported	Supported	Not Supported	Supported	Supported	Not Supported	Supported
1783-MMS10AR	Supported	Supported	Not Supported	Not Supported	Supported	Supported	Supported	Supported	Not Supported	Supported
1783-MMS10ER	Supported	Not Supported	Supported	Not Supported	Supported	Not Supported	Supported	Supported	Supported	Supported
1783-MMS10EAR	Supported	Supported	Supported	Supported	Supported	Supported	Supported	Supported	Supported	Supported

Table 30 - Technical Specifications - Stratix 5800 Expansion Modules

Attribute	1783-MMX8T	1783-MMX8TA	1783-MMX8E	1783-MMX8EA	1783-MMX8S	1783-MMX8SA	1783-MMX6T2S	1783-MMX16E	1783-MMX16T	1783-MMX14T2S
Power consumption	6 W	12 W	6 W @ 24 VDC Max PoE power @ 50V: 240 W	20 W @ 24 VDC Max PoE power @ 50V: 240 W	19 W	27 W	9 W	12 W @ 24 VDC Max PoE power @ 50V: 240 W	15 W	16 W
Power dissipation	6 W	12 W	14 W	20 W	19 W	27 W	9 W	21 W	15 W	16 W

Table 31 - Technical Specifications - Stratix 5800 Switches

Attribute	1783-MMS10BE	1783-MMS10E, 1783-MMS10ER	1783-MMS10EA 1783-MMS10EAR	1783-MMS10 1783-MMS10R	1783-MMS10A, 1783-MMS10AR	1783-MMS10B
Alarm relay	30V DC, 1 A or 48V DC, 0.5 A					
Power input, max	12...54V DC, 5.5 A	12...54V DC, 10.6 A	12...54V DC, 10.7 A	12...48V DC, 4.0 A	12...54V DC, 6.4A	12...48V DC, 2.2 A
PoE input power	44...54V DC for PoE 50...54V DC for PoE+ or a combination of PoE and PoE+			—		
Power consumption	23 W @ 24 DC Max PoE power @ 50V: 240 W	23 W @ 24 DC Max PoE power @ 50V: 240 W	36 W @ 24 VDC Max PoE power @ 50V: 240 W	23 W	36 W	23 W
Power dissipation	32 W	32 W	47 W	23 W	36 W	23 W
Wire size, Ethernet connections	RJ45 connector according to IEC 60603-7, 2 or 4 pair Category 5e minimum cable according to TIA 568-B.1 or Category 5 cable according to ISO/IEC 24702					
Wire size, DC power connections, max	0.5...0.8 mm^2 (20...18 AWG) solid or stranded, UL/CSA-rated style 1007 or 1569 twisted-pair copper appliance wiring material (AWM) wire, such as Belden part number 9318), 6.3 mm (0.25 in.) ± 0.5 mm (0.02 in.) strip length					
Wire size, ground connection, max	4.0 mm^2 (12 AWG) minimum, stranded copper wire					
Wire size, alarm connections, max	0.5... 0.8 mm^2 (20...18 AWG) solid or stranded, UL/CSA-rated style 1007 or 1569 twisted-pair copper appliance wiring material (AWM) wire, such as Belden part number 9318), 6.3 mm (0.25 in.) ± 0.5 mm (0.02 in.) strip length					
Screw torque, power terminals	0.565 N•m (5.0 in•lb)					
Screw torque, power terminal captive screw	0.226 N•m (2.0 in•lb)					
Screw torque, ground connection	0.51 N•m (4.5 in•lb) max					
Screw torque, alarm connection	0.23 N•m (2.0 in•lb) max					
Wiring category	3 - on console and alarm ports 2 - on DC power ports 2 - on Ethernet ports					
Pilot duty rating	Alarm not rated					
Enclosure type rating	None (open-style)					
North America temp code	T4					
ATEX temp code	T4					
Memory card	1784-SDHC8					
SFP modules(1)	1783-SFP100FX 1783-SFP100LX 1783-SFP100EXC 1783-SFP100ZXC 1783-SFP1GSX 1783-SFP1GLX 1783-SFP1GEXE 1783-SFP1GZX 1783-SFP1GTE					

(1) SFP modules are supported only on switches with combo ports or SFP slots. For SFP specifications, see page 81.

Table 32 - Environmental Specifications - Stratix 5800 Switches

Attribute	1783-MMS10BE, 1783-MMS10E	1783-MMS10B, 1783-MMS10, 1783-MMS10A, 1783-MMS10AR, 1783-MMS10EA, 1783-MMS10R, 1783-MMS10ER, 1783-MMS10EAR
Temperature, operating IEC 60068-2-1 (Test Ad, Operating Cold), IEC 60068-2-2 (Test Bd, Operating Dry Heat), IEC 60068-2-14 (Test Nb, Operating Thermal Shock):	Series A: -40 °C < Ta < +55 °C (-40 °F < Ta < +131 °F)	-40 °C < Ta < +60 °C (-40 °F < Ta < +140 °F)
	Series B: -40 °C < Ta < +60 °C (-40 °F < Ta < +140 °F)	
Temperature, surrounding air, max	Series A: 55 °C (131 °F)	60 °C (140 °F)
	Series B: 60 °C (140 °F)	
Temperature, nonoperating IEC 60068-2-1 (Test Ab, Unpackaged Nonoperating Cold), IEC 60068-2-2 (Test Bb, Unpackaged Nonoperating Dry Heat), IEC 60068-2-14 (Test Na, Unpackaged Nonoperating Thermal Shock)	-40...+85 °C (-40...+185 °F)	
Relative humidity IEC 60068-2-30 (Test Db, Unpackaged Damp Heat)	5...95% noncondensing	
Vibration IEC 60068-2-6 (Test Fc, Operating)	2 g @ 10...500 Hz	
Shock, operating IEC 60068-2-27 (Test Ea, Unpackaged Shock)	15 g	
Shock, nonoperating IEC 60068-2-27 (Test Ea, Unpackaged Shock)	30 g	
Emissions	IEC 61000-6-4	
ESD immunity IEC 61000-4-2	6 kV contact discharges 8 kV air discharges	
Radiated RF immunity IEC 61000-4-3	10V/m with 1 kHz sine-wave 80% AM from 80...2000 MHz 10V/m with 200 Hz 50% Pulse 100% AM at 900 MHz 10V/m with 200 Hz 50% Pulse 100% AM at 1890 MHz 3V/m with 1 kHz sine-wave 80% AM from 2000...2700 MHz	
EFT/B immunity IEC 61000-4-4	±4 kV at 5 kHz on power ports ±4 kV at 100 kHz on Alarm ports ±2 kV at 5 kHz on Ethernet ports	
Surge transient immunity IEC 61000-4-5	±1 kV line-line(DM) and ±2 kV line-earth(CM) on power ports no signal ports - omit from publication no shielded ports - omit from publication ±2 kV line-earth(CM) on Ethernet ports	
Conducted RF immunity IEC 61000-4-6	10V rms with 1 kHz sine-wave 80% AM from 150 kHz...80 MHz	
Environmental rating	IP30	
Electric Power Stations Communications Networking EEE 1613	EEE 1613	
Electric Substations Communications Networking IEC 61850-3	IEC 61850-3(1)	

(1) The switch only meets the requirements of IEC 61850-3 when powered by a redundant power supply configuration.

Table 33 - Certifications - Stratix 5800 Switches

Certifications (when product is marked)[1]	Stratix 5800 Switches
c-UL-us	UL Listed Industrial Control Equipment, certified for US and Canada. See UL File E65584. UL Listed for Class I, Division 2 Group A,B,C,D Hazardous Locations, certified for U.S. and Canada. See UL File E194810. UL Listed for Class I, Zone 2 Hazardous Locations, certified for U.S. and Canada. See UL File Exxxxx. AEx/Ex nA nC IIC T4X Gc
CCC	CCC 2020012310358981 CNCA-C23-01 强制性产品认证实施规则 防爆电气 CNCA-C23-01 CCC Implementation Rule Explosion-Proof Electrical Products
CE	European Union 2014/30/EU EMC Directive, compliant with: • EN 61326-1; Meas./Control/Lab., Industrial Requirements • EN 61000-6-2; Industrial Immunity • EN 61000-6-4; Industrial Emissions • EN 61131-2; Programmable Controllers (Clause 8, Zone A & B) European Union 2011/65/EU RoHS, compliant with: • EN 50581; Technical documentation
RCM	Australian Radiocommunications Act, compliant with: • AS/NZS CISPR 11; Industrial Emissions
Ex	UK Statutory Instrument 2016 No. 1107 and European Union 2014/34/EU ATEX Directive, compliant with: • EN IEC 60079-0; General Requirements • EN IEC 60079-7; Explosive Atmospheres, Protection "e" • II 3 G Ex ec IIC T4 Gc • DEMKO 19 ATEX 2207X, UL22UKEX2350X
UKCA	In conformity with the following UK Statutory Instruments and their amendments: • 2016 No. 1091, Electromagnetic Compatibility Regulations • 2016 No. 1101, Electrical Equipment (Safety) Regulations • 2016 No. 1107, Equipment and Protective Systems Intended for Use in Potentially Explosive Atmospheres Regulations • 2012 No. 3032, Restriction of the Use of Certain Hazardous Substances in Electrical and Electronic Equipment
KC	Korean Registration of Broadcasting and Communications Equipment, compliant with: • Article 58-2 of Radio Waves Act, Clause 3
EtherNet/IP	ODVA conformance tested to EtherNet/IP specifications

(1) See the Product Certification link at http://www.ab.com for declarations of conformity, certificates, and other certification details.

Dimensions—Stratix 5800 Switches and Expansion Modules

To prevent the switch from overheating, observe the following minimum clearances:

- Top and bottom: 50.8 mm (2.0 in.)
- Sides: 50.8 mm (2.0 in.)
- Front: 50.8 mm (2.0 in.)

These diagrams are representative of the Stratix 5800 switches. Actual faceplates vary depending on the catalog number.

Base Switches without Advanced Feature Support
1783-MMS10B, 1783-MMS10BE, 1783-MMS10,
1783-MMS10E, 1783-MMS10R, 1783-MMS10ER

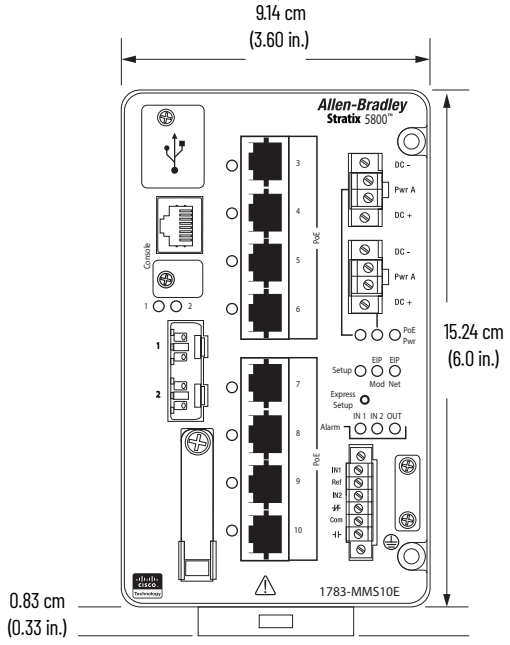

Base Switches with Advanced Feature Support
1783-MMS10EA, 1783-MMS10EAR

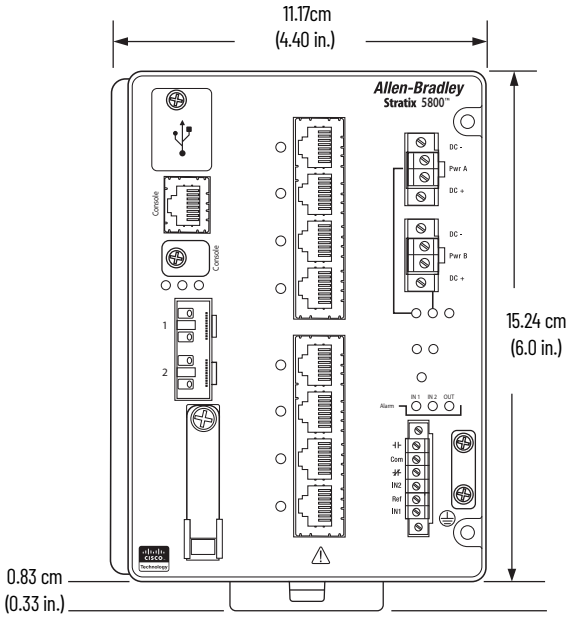

8-port Expansion Modules
1783-MMX8T, 1783-MMX8E,
1783-MMX8EA, 1783-MMX8S,
1783-MMX8SA, 1783-MMX6T2S

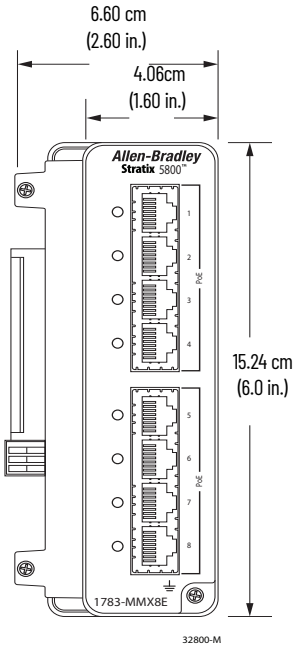

16-port Expansion Modules
1783-MMX16T, 1783-MMX16E, 1783-MMX14T2S

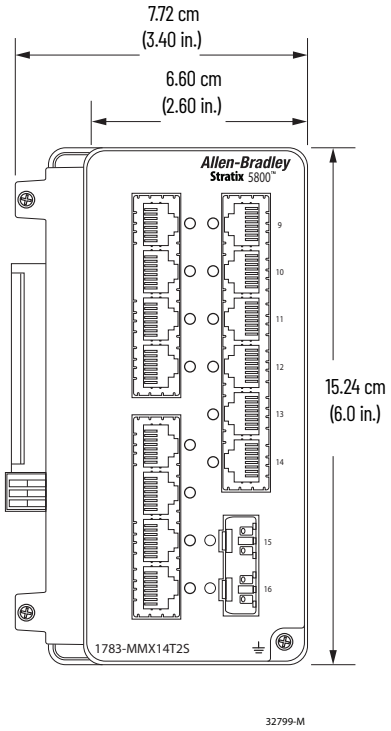

All Switches and Expansion Modules

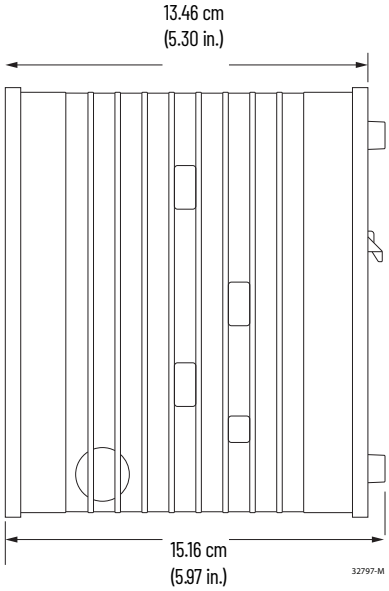

Base Switches without Advanced Feature Support
Mated with Any 8-port Expansion Module
1783-MMS10B, 1783-MMS10BE, 1783-MMS10,
1783-MMS10E, 1783-MMS10R, 1783-MMS10ER

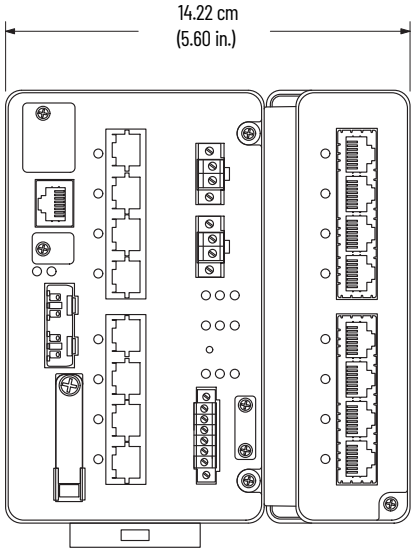

Base Switches without Advanced Feature Support
Mated with Any 16-port Expansion Module
1783-MMS10B, 1783-MMS10BE, 1783-MMS10,
1783-MMS10E, 1783-MMS10R, 1783-MMS10ER

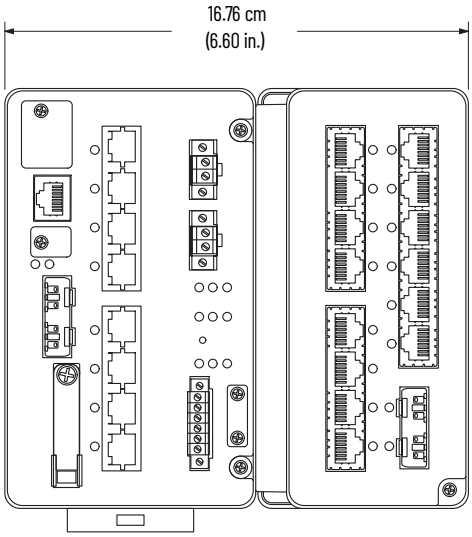

Base Switches with Advanced Feature Support
Mated with Any 8-port Expansion Module
1783-MMS10EA, 1783-MMS10EAR

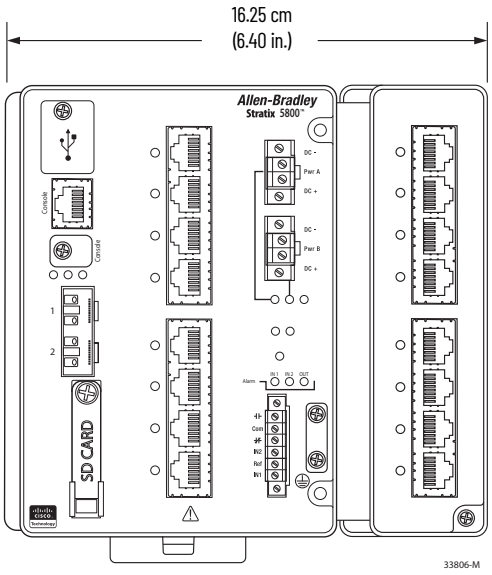

Base Switches with Advanced Feature Support
Mated with Any 16-port Expansion Module
1783-MMS10EA, 1783-MMS10EAR

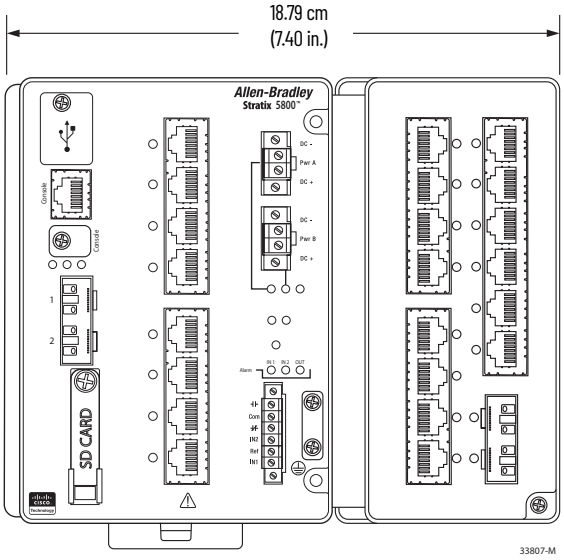

Stratix 6000 Ethernet Managed Switches

Table 34 - Technical Specifications - Stratix 6000 Switches

Attribute	1783-EMS08T	1783-EMS04T
Description	Stratix 6000 managed switch • 8 ports • 1 fiber SFP slot	Stratix 6000 managed switch 4 ports
Power input	250 mA @ 24V DC (12...48V DC) CL 2/SELV	100 mA @ 24V DC (12...48V DC) CL 2/SELV
Power dissipation, max	5.8 W	2.6 W
Thermal dissipation, max	24.6 BTU/hr @ 60 °C (140 °F)	
Network ports	8 RJ45 10/100 full/half duplex ports; optional SFP port	4 RJ45 10/100 full/half duplex ports
Protocols	TCP/IP, EtherNet/IP, Telnet, Http, DHCP, BOOTP, FTP, IGMP, SMTP	
Indicators	16 port indicators 3 status indicators	8 port indicators 2 status indicators
EtherNet/IP features	MAC ID management, bandwidth alarming, port control, link status, scaled bandwidth information, and connections active	
Switch features	VLAN, IGMP snooping, IGMP query V1 and V2, DHCP server, BOOTP server, QoS, port mirroring	IGMP snooping, IGMP query V1 and V2, DHCP server, BOOTP server, QoS, port mirroring
Options	1 GB fiber-optic transceiver	—
Inrush current, max	2.2 A	
Isolation voltage	50V (continuous), basic insulation type, power to ground and power to network channels No isolation between individual network channels Routine tested at 707V AC for 1 s	
Wire size, Ethernet connection(1)	RJ45 connector according to IEC 60603-7, 2- or 4-pair Category 5e minimum cable according to TIA 568-B.1 or Category 5 cable according to ISO/IEC 24702	
Wire size, DC power connection	0.33...3.3 mm^2 (22...12 AWG) solid or stranded copper wire rated at 75 °C (167 °F) or greater, 1.2 mm (3/64 in.) insulation max	
Wire size, ground connection	3.3 mm^2 (12 AWG) solid or stranded copper wire rated at 75 °C (167 °F) or greater	
Screw torque, power and ground terminals	1.36 N•m (12 in•lb)	
Wiring category(2)	2 - on DC power ports 2 - on communication ports	
Enclosure type rating	None (open-style)	
North American temp code	T4	
ATEX temp code	T4	
SFP modules(3)	1783-SFP1GSX 1783-SFP1GLX	

(1) See page 83 for recommended products.
(2) Use this conductor category information for planning conductor routing. Refer to Industrial Automation Wiring and Grounding Guidelines, publication 1770-4.1.
(3) SFP modules are supported only on switches with combo ports or SFP slots. For SFP specifications, see page 81.

Table 35 - Environmental Specifications - Stratix 6000 Switches

Attribute	1783-EMS04T, 1783-EMS08T
Temperature, operating IEC 60068-2-1 (Test Ad, Operating Cold), IEC 60068-2-2 (Test Bd, Operating Dry Heat), IEC 60068-2-14 (Test Nb, Operating Thermal Shock)	0 °C < Ta < +60 °C (+32 °F < Ta < +140 °F)
Temperature, ambient, max	60 °C (140 °F)
Temperature, surrounding air, max	60 °C (140 °F)
Temperature, nonoperating IEC 60068-2-1 (Test Ab, Unpackaged Nonoperating Cold), IEC 60068-2-2 (Test Bb, Unpackaged Nonoperating Dry Heat), IEC 60068-2-14 (Test Na, Unpackaged Nonoperating Thermal Shock)	-40...+85 °C (-40...+185 °F)
Relative humidity IEC 60068-2-30 (Test Db, Unpackaged Damp Heat)	5...95% noncondensing
Vibration IEC 60068-2-6 (Test Fc, Operating)	2 g @ 10...500 Hz
Operating shock IEC 60068-2-27 (Test Ea, Unpackaged Shock)	15 g
Nonoperating shock IEC 60068-2-27 (Test Ea, Unpackaged Shock)	30 g
Emissions IEC 61000-6-4	IEC 61000-6-4
ESD immunity IEC 61000-4-2	6 kV contact discharges 8 kV air discharges
Radiated RF immunity IEC 61000-4-3	10V/m with 1 kHz sine-wave 80% AM from 80...2000 MHz 10V/m with 200 Hz 50% Pulse 100% AM at 900 MHz 10V/m with 200 Hz 50% Pulse 100% AM at 1890 MHz 1V/m with 1 kHz sine-wave 80% AM from 2000...2700 MHz
EFT/B immunity IEC 61000-4-4	±2 kV at 5 kHz on power ports ±1 kV at 5 kHz on communication ports
Surge transient immunity IEC 61000-4-5	±1 kV line-line (DM) and ±2 kV line-earth (CM) on AC power ports ±2 kV line-earth (CM) on communication ports
Conducted RF immunity IEC 61000-4-6	10V rms with 1 kHz sine-wave 80% AM from 150 kHz...80 MHz
Magnetic field immunity IEC 61000-4-8	30 A/m long duration and 300 A/m short duration at 50 Hz and 60 Hz
Voltage variation IEC 61000-4-29	10 ms interruption on DC supply ports
Environmental rating	IP20

Table 36 - Certifications - Stratix 6000 Switches

Certifications (when product is marked)[1]	1783-EMS08T, 1783-EMS04T
c-UL-us	UL Listed Information Technology Equipment, certified for US and Canada. See UL File E151729.
c-ETL-us	ETL Listed Industrial Control Equipment, certified for US and Canada.
c-ETL-us	ETL Listed for Class I, Division 2 Group A,B,C,D Hazardous Locations, certified for U.S. and Canada
CE	European Union 2004/108/EC EMC Directive, compliant with: EN 61326-1; Meas./Control/Lab., Industrial Requirements EN 61000-6-2; Industrial Immunity EN 61000-6-4; Industrial Emissions EN 61131-2; Programmable Controllers (Clause 8, Zone A & B) European Union 2011/65/EU RoHS, compliant with: EN 50581; Technical documentation
RCM	Australian Radiocommunications Act, compliant with: EN 61000-6-4; Industrial Emissions
Ex	EN 60079-0; General Requirements EN 60079-11; Explosive Atmospheres, Protection "i" EN 60079-15; Potentially Explosive Atmospheres, Protection "n" II 3 Ex ic nA IIC T4 Gc
KC	Korean Registration of Broadcasting and Communications Equipment, compliant with: Article 58-2 of Radio Waves Act, Clause 3
EtherNet/IP	ODVA conformance tested to EtherNet/IP specifications

(1) See the Product Certification link at www.ab.com for Declarations of Conformity, Certificates, and other certification details.

Dimensions—Stratix 6000 Switches

Mount the switches, as shown, in the vertical position only. We do not recommend horizontal mounting due to thermal considerations. Follow these guidelines:

- Provide 50 mm (2 in.) of space on all sides for adequate heat dissipation.
- Leave 100 mm (4 in.) for installation and removal if using the fiber-optic port on the bottom of the 1783-EMS08T switch.

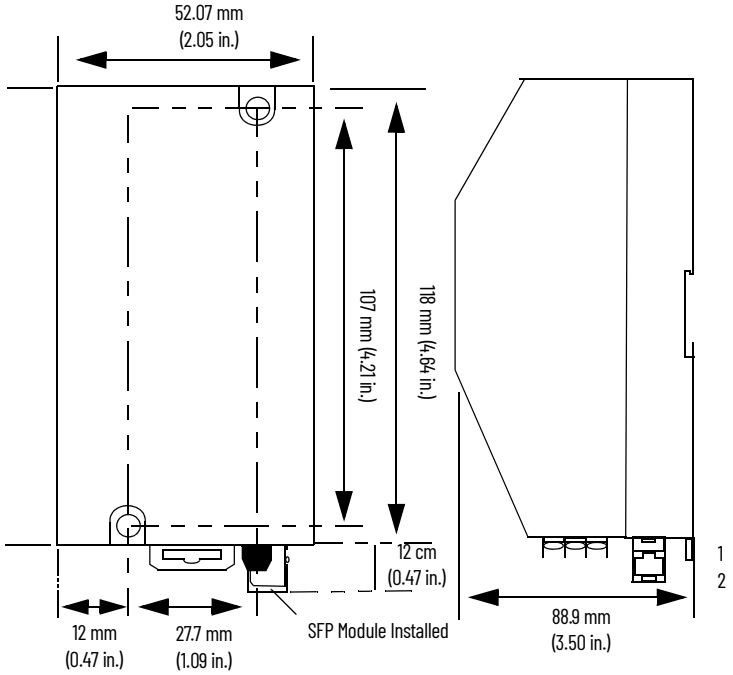

Stratix 8000 and 8300 Ethernet Managed Switches

Table 37 - Technical Specifications - Stratix 8000 and 8300 Switches

Attribute	1783-MS06T	1783-MS10T	1783-RMS06T	1783-RMS10T
Description	Stratix 8000 managed switch, Layer 2, 6 ports	Stratix 8000 managed switch, Layer 2, 10 ports	Stratix 8300 managed switch, Layer 3, 6 ports	Stratix 8300 managed switch, Layer 3, 10 ports
Inrush current, max	2.0 A			
Power input, max	2 A max @ 18...60V DC, CL 2/SELV			
Alarm relay, max	1 A max @ 30V DC, CL 2/SELV			
Power consumption, max (Expansion module power not included)	15.1 W	15.7 W	15.1 W	15.7 W
Power dissipation	15.1 W	15.7 W	15.1 W	15.7 W
Isolation voltage	75V (continuous), basic insulation type, power to ground, power to network channels, and power to alarm No isolation between individual Ethernet ports No isolation between console port and system Type tested at 1000V AC for 60 s			
Wire size, Ethernet connection(1)	RJ45 connector according to IEC 60603-7, 2- or 4-pair Category 5e minimum cable according to TIA 568-B.1 or Category 5 cable according to ISO/IEC 24702			
Wire size, DC power and alarm connections	0.5...0.8 mm^2 (20...18 AWG) solid or stranded copper wire rated at 90 °C (194 °F) or greater, 1.2 mm (3/64 in.) insulation max			
Wire size, ground connection	3.3...5.3 mm^2 (12...10 AWG) solid or stranded copper wire rated at 75 °C (167 °F) or greater			
Screw torque, power and alarm terminals	0.23 N•m (2.0 in•lb)			
Wiring category(2)	2 - on alarm ports 2 - on power ports 2 - on Ethernet ports			
Enclosure type rating	None (open-style)			
Pilot duty rating	Not rated			
North American temp code	T4			
IEC temp code	T4			
SFP modules(3)	1783-SFP100FX 1783-SFP100LX 1783-SFP100EXC 1783-SFP100ZXC 1783-SFP100T(4) 1783-SFP1GSX 1783-SFP1GLX 1783-SFP1GEXE 1783-SFP1GZX 1783-SFP1GTE		1783-SFP100FX 1783-SFP100LX 1783-SFP100EXC 1783-SFP100ZXC 1783-SFP1GSX 1783-SFP1GLX 1783-SFP1GEXE 1783-SFP1GZX 1783-SFP1GTE	
Memory card	1783-MCF		1783-RMCF	

(1) See page 83 for recommended products.
(2) Use this conductor category information for planning conductor routing. Refer to Industrial Automation Wiring and Grounding Guidelines, publication 1770-4.1.
(3) SFP modules are supported only on switches with combo ports or SFP slots. For SFP specifications, see page 81.
(4) The 1783-SFP100T module requires Stratix 8000 firmware revision 12.001or later.

Table 38 - Environmental Specifications - Stratix 8000 and 8300 Switches

Attribute	1783-MS06T, 1783-MS10T, 1783-RMS06T, 1783-RMS10T
Temperature, operating IEC 60068-2-1 (Test Ad, Operating Cold), IEC 60068-2-2 (Test Bd, Operating Dry Heat), IEC 60068-2-14 (Test Nb, Operating Thermal Shock)	-40...+60 °C (-40...+140 °F)
Temperature, surrounding air, max	60 °C (140 °F)
Temperature, nonoperating IEC 60068-2-1 (Test Ab, Unpackaged Nonoperating Cold), IEC 60068-2-2 (Test Bb, Unpackaged Nonoperating Dry Heat), IEC 60068-2-14 (Test Na, Unpackaged Nonoperating Thermal Shock)	-40...+85 °C (-40...+185 °F)
Relative humidity IEC 60068-2-30 (Test Db, Unpackaged Damp Heat)	5...95% noncondensing

Table 38 - Environmental Specifications - Stratix 8000 and 8300 Switches

Attribute	1783-MS06T, 1783-MS10T, 1783-RMS06T, 1783-RMS10T
Vibration IEC 60068-2-6 (Test Fc, Operating)	2 g @ 10...500 Hz
Shock, operating IEC 60068-2-27 (Test Ea, Unpackaged Shock)	20 g
Shock, nonoperating IEC 60068-2-27 (Test Ea, Unpackaged Shock)	30 g
Emissions CISPR11 (IEC 61000-6-4)	Class A
ESD immunity IEC 61000-4-2	8 kV contact discharges 15 kV air discharges
Radiated RF immunity IEC 61000-4-3	20V/m with 1 kHz sine-wave 80% AM from 80...1000 MHz 10V/m with 200 Hz 50% Pulse 100% AM at 900 MHz 10V/m with 200 Hz 50% Pulse 100% AM at 1890 MHz 10V/m with 1 kHz sine-wave 80% AM from 1000...2700 MHz
EFT/B immunity IEC 61000-4-4	±4 kV at 2.5 kHz and ±2 kV at 5 kHz on power ports ±4 kV at 2.5 kHz and ±2 kV at 5 kHz on alarm ports ±4 kV at 2.5 kHz and ±2 kV at 5 kHz on Ethernet ports
Surge transient immunity IEC 61000-4-5	±1 kV line-line (DM) and ±2 kV line-earth (CM) on power ports ±1 kV line-line (DM) and ±2 kV line-earth (CM) on alarm ports ±2 kV line-earth (CM) on Ethernet ports
Conducted RF immunity IEC 61000-4-6	10V rms with 1 kHz sine-wave 80% AM from 150 kHz...80 MHz
Magnetic field immunity IEC 61000-4-8	30 A/m long duration and 300 A/m short duration at 50 Hz and 60 Hz
Oscillatory surge withstand IEEE C37.90.1	2.5 kV
Voltage variation IEC 61000-4-29	10 ms interruption on DC supply ports
Environmental rating	IP20

Table 39 - Certifications - Stratix 8000 and 8300 Switches

Certifications (when product is marked)(1)	1783-MS06T, 1783-MS10T, 1783-RMS06T, 1783-RMS10T
c-UL-us	UL Listed Industrial Control Equipment, certified for US and Canada. See UL File E65584. UL Listed for Class I, Division 2 Group A,B,C,D Hazardous Locations, certified for U.S. and Canada. See UL File E194810.
CE	European Union 2004/108/EC EMC Directive, compliant with: • EN 61326-1; Meas./Control/Lab., Industrial Requirements • EN 61000-6-2; Industrial Immunity • EN 61000-6-4; Industrial Emissions • EN 61131-2; Programmable Controllers (Clause 8, Zone A & B) European Union 2011/65/EU RoHS, compliant with: • EN 50581; Technical Documentation
RCM	ACMA EMC Std 08
Ex	European Union 94/9/EC ATEX Directive, compliant with: • EN 60079-15; Potentially Explosive Atmospheres, Protection "n" • EN 60079-0; General Requirements • II 3 G Ex nA nC IIC T4 Gc X
KC	Korean Certification of Broadcasting and Communications Equipment, compliant with: • Framework Act on Telecommunications and Radio Waves Act
EtherNet/IP	ODVA conformance tested to EtherNet/IP specifications
EAC	Russian Customs Union TR CU 020 EMC Technical Regulation
BSMI	CNS 13438 (95); CNS14336-1 (99) Taiwan

(1) See the Product Certification link at http://www.ab.com for declarations of conformity, certificates, and other certification details.

Optional Expansion Modules—Stratix 8000 and 8300 Switches

Cat. No.	Description
1783-MX08T	Expansion module with 8 10/100 Base-T copper Ethernet ports
1783-MX08F	Expansion module with 8 100 Base-F fiber-optic Ethernet ports
1783-MX04S	Expansion module with 4 100 FX fiber-optic SFP slots
1783-MX08S	Expansion module with 8 100 FX fiber-optic SFP slots
1783-MX04E	Expansion module with 4 PoE ports
1783-MX04T04E	Ethernet expansion module with 4 10/100 Base-T copper Ethernet ports and 4 PoE ports

Table 40 - Technical Specifications - Stratix 8000 and 8300 Expansion Modules

Attribute	1783-MX08T	1783-MX08F	1783-MX04S	1783-MX08S
Description	Expansion module 8 ports, copper	Expansion module 8 ports, fiber	Expansion module 4 SFP ports, fiber	Expansion module 8 SFP ports, fiber
Backplane power, max	3.3V DC, 1.7 A	3.3V DC, 3.6 A	3.3V DC, 2.5 A	3.3V DC, 4.0 A
Power consumption, max	2.8 W	10.1 W	7.6 W	12.2 W
Power dissipation	2.8 W	10.1 W	7.6 W	12.2 W
Isolation voltage	75V (continuous), basic insulation type, expansion backplane to network channels No isolation between individual Ethernet ports Type tested at 1000V AC for 60 s	—		
Wire size, Ethernet connection(1)	RJ45 connector according to IEC 60603-7, 2- or 4-pair Category 5e minimum cable according to TIA 568-B.1 or Category 5 cable according to ISO/IEC 24702	—		
Wiring category(2)	2 - on Ethernet ports	—		
Enclosure type rating	None (open-style)			
North American temp code	T4			
IEC temp code	T4			
SFP modules(3)	—		1783-SFP100FX 1783-SFP100LX 1783-SFP100EXC 1783-SFP100ZXC 1783-SFP100T(4)	

(1) See page 83 for recommended products.
(2) Use this conductor category information for planning conductor routing. Refer to Industrial Automation Wiring and Grounding Guidelines, publication 1770-4.1.
(3) For SFP specifications, see page 81.
(4) The 1783-SFP100T module requires Stratix 8000 firmware revision 12.001or later.

Table 41 - Technical Specifications - Stratix 8000 and 8300 Fiber Expansion Module

Attribute	1783-MX08F
Ethernet data rate	100 Mbps
Connecting mode	Full-duplex
Optical wavelength	1310 nm
Optical cable length, max	Graded index multimode fiber; 2000 m
Optical link budget	8 dB with 62.5/125 µm multimode cable 4 dB with 50/125 µm multimode cable
Connector type	IEC 61754-20 LC connector

Table 42 - Technical Specifications - Stratix 8000 and 8300 PoE Expansion Modules

Attribute	1783-MX04E	1783-MX04T04E
Description	Expansion module 4 ports, PoE	Expansion module • 4 ports, copper • 4 ports, PoE
Backplane power	3.3V DC, 0.94 A max	3.34V DC, 1.08 A max
PoE power input(1)	48V DC for PoE 54V DC for PoE+ for a combination of PoE and PoE+ 2.5 A max	48V DC for PoE 54V DC for PoE+ for a combination of PoE and PoE+ 2.4 A max
Power consumption(2)	3 W @ 24V DC @ 40°C (104°F), 7.3 W max PoE power at 44V: 62 W max	3.5 W @ 24V DC @ 40°C (104°F), 7.9 W max PoE power at 44V: 62 W max
Power dissipation	7.3 W	7.9 W
Isolation voltage	60V (continuous), basic insulation type, expansion backplane to network ports, expansion backplane to power ports, and power ports to network ports No isolation between individual network ports Type tested at 1570V DC for 60 s	
Wire size, Ethernet connection(3)	RJ45 connector according to IEC 60603-7, 2 or 4 pair Category 5e minimum cable according to TIA 568-B.1 or Category 5 cable according to ISO/IEC 24702	
Wiring category(4)	2 - on Ethernet ports 2 - on power ports	
Enclosure type rating	None (open-style)	
North American temp code	T4	
IEC temp code	T4	
SFP modules	—	

(1) The initial power allocation and the maximum power allocation on a PoE port are configurable in Device Manager or the Logix Designer application. For details about PoE power budgets, see the Stratix Managed Switches User Manual, publication 1783-UM007.

(2) For PoE configurations, the power consumption values listed represent the highest values that can be configured using all ports. A general guideline is 0.5 W per 30 W PoE+ port used.
(3) See page 83 for recommended products.
(4) Use this conductor category information for planning conductor routing. Refer to Industrial Automation Wiring and Grounding Guidelines, publication 1770-4.1.

Table 43 - Environmental Specifications - Stratix 8000 and 8300 Expansion Modules

Attribute	1783-MX08T	1783-MX08F	1783-MX04S, 1783-MX08S	1783-MX04E, 1783-MX04T04E
Temperature, operating IEC 60068-2-1 (Test Ad, Operating Cold), IEC 60068-2-2 (Test Bd, Operating Dry Heat), IEC 60068-2-14 (Test Nb, Operating Thermal Shock)	-40...+60 °C (-40...+140 °F)			
Temperature, surrounding air, max	60 °C (140 °F)			
Temperature, nonoperating IEC 60068-2-1 (Test Ab, Unpackaged Nonoperating Cold), IEC 60068-2-2 (Test Bb, Unpackaged Nonoperating Dry Heat), IEC 60068-2-14 (Test Na, Unpackaged Nonoperating Thermal Shock)	-40...+85 °C (-40...+185 °F)			
Relative humidity IEC 60068-2-30 (Test Db, Unpackaged Damp Heat)	5...95% noncondensing			
Vibration IEC 60068-2-6 (Test Fc, Operating)	2 g @ 10...500 Hz			
Shock, operating IEC 60068-2-27 (Test Ea, Unpackaged Shock)	20 g		15 g	
Shock, nonoperating IEC 60068-2-27 (Test Ea, Unpackaged Shock)	30 g			
Emissions CISPR11 (IEC 61000-6-4)	Group 1, Class A			

Table 43 - Environmental Specifications - Stratix 8000 and 8300 Expansion Modules (Continued)

Attribute	1783-MX08T	1783-MX08F	1783-MX04S, 1783-MX08S	1783-MX04E, 1783-MX04T04E
ESD immunity IEC 61000-4-2	8 kV contact discharges 15 kV air discharges		8 kV air discharges	
Radiated RF immunity IEC 61000-4-3	20V/m with 1 kHz sine-wave 80% AM from 80...1000 MHz 10V/m with 200 Hz 50% Pulse 100% AM at 900 MHz 10V/m with 200 Hz 50% Pulse 100% AM at 1890 MHz 10V/m with 1 kHz sine-wave 80% AM from 1000...2700 MHz		10V/m with 1 kHz sine-wave 80% AM from 80...2000 MHz 10V/m with 200 Hz 50% Pulse 100% AM at 900 MHz 10V/m with 200 Hz 50% Pulse 100% AM at 1890 MHz 3V/m with 1 kHz sine-wave 80% AM from 2000...2700 MHz	
EFT/B immunity IEC 61000-4-4	±4 kV at 2.5 kHz and ±2 kV at 5 kHz on Ethernet ports	—		±2 kV at 5 kHz on power ports and ±2 kV at 5 kHz on Ethernet ports
Surge transient immunity IEC 61000-4-5	±2 kV line-earth (CM) on Ethernet ports	—		±1 kV line-line(DM) and ±2 kV line-earth(CM) on power ports ±2 kV line-earth(CM) on communication ports
Conducted RF immunity IEC 61000-4-6	10V rms with 1 kHz sine-wave 80% AM from 150 kHz...80 MHz	—		10V rms with 1 kHz sine-wave 80% AM from 150 kHz...80 MHz
Magnetic field immunity IEC 61000-4-8	30 A/m long duration and 300 A/m short duration at 50 Hz and 60 Hz		30 A/m long duration and 300 A/m short duration at 50 Hz	
Magnetic pulse immunity IEC 61000-4-9	—		300 A/m pulse	
Oscillatory surge withstand IEEE C37.90.1	2.5 kV	—		
Damped oscillatory wave immunity IEC 61000-4-18	—			±1 kV line-line(DM) and ±2.5 kV line-earth(CM) on power ports

Table 44 - Certifications - Stratix 8000 and 8300 Expansion Modules

Certifications (when product is marked)(1)	1783-MX08T, 1783-MX08F, 1783-MX04S, 1783-MX08S, 1783-MX04E, 1783-MX04T04E
c-UL-us	UL Listed Industrial Control Equipment, certified for US and Canada. See UL File E65584. UL Listed for Class I, Division 2 Group A,B,C,D Hazardous Locations, certified for U.S. and Canada. See UL File E194810. UL Listed for Class I, Zone 2 Hazardous Locations, certified for U.S. and Canada. See UL File E194810. AEx/Ex nA IIC T4 Gc X
CE	European Union 2004/108/EC EMC Directive, compliant with: • EN 61326-1; Meas./Control/Lab., Industrial Requirements • EN 61000-6-2; Industrial Immunity • EN 61000-6-4; Industrial Emissions • EN 61131-2; Programmable Controllers (Clause 8, Zone A & B) European Union 2011/65/EU RoHS, compliant with: • EN 50581; Technical Documentation
RCM	ACMA EMC Std 08
Ex	European Union 94/9/EC ATEX Directive, compliant with: • EN 60079-15; Potentially Explosive Atmospheres, Protection "n" • EN 60079-0; General Requirements • II 3 G Ex nA IIC T4 Gc X
KC	Korean Certification of Broadcasting and Communications Equipment, compliant with: • Framework Act on Telecommunications and Radio Waves Act
EtherNet/IP	ODVA conformance tested to EtherNet/IP specifications
BSMI	CNS 13438 (95); CNS14336-1 (99) Taiwan

(1) See the Product Certification link at http://www.ab.com for declarations of conformity, certificates, and other certification details.

Dimensions—Stratix 8000 and 8300 Switches

This illustration shows dimensions for the 1783-MS10T switch and the 1783-MX08T expansion module. Dimensions for the other switches are the same as the 1783-MS10T switch. Dimensions for the other expansion modules are the same as the 1783-MX08T expansion module.

Airflow around the switch and through the vents is unrestricted. To prevent the switch from overheating, these minimum clearances must be met:

- Top and bottom: 105 mm (4.13 in.)
- Left and right: 90 mm (3.54 in.)
- Front: 65 mm (2.56 in.)

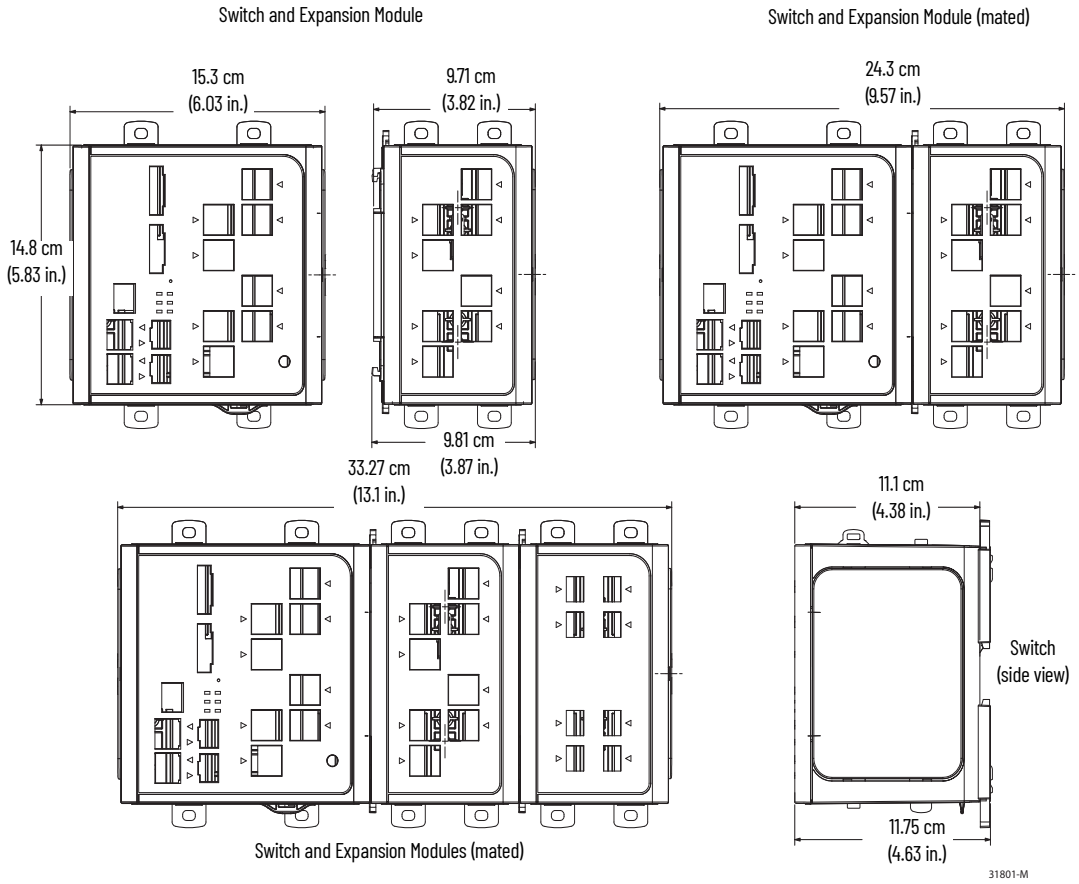

For panel-mounting, the height of the center of the mounting holes on both the top and bottom latches measures 8.73 mm (0.34 in.) above the top surface (or below the bottom surface) of the switch.
On the switch base unit, the tab hole center-to-center spacing is 6.83 cm (2.69 in.).
For expansion modules, the tab hole center-to-center spacing is 4.36 cm (1.72 in.).

Stratix 5100 Wireless Access Point/Workgroup Bridge

Table 45 - Technical Specifications - Stratix 5100 Wireless Access Point/Workgroup Bridge

Attribute	1783-WAPBK9 United States	1783-WAPAK9 Canada/Latin America	1783-WAPEK9 European Union	1783-WAPZK9 Australia/New Zealand	1783-WAPCK9 China
Dimensions (LxWxD)	22.04 x 22.04 x 4.67 cm (8.68 x 8.68 x 1.84 in.)	22.04 x 22.04 x 4.67 cm (8.68 x 8.68 x 1.84 in.)	22.04 x 22.04 x 4.67 cm (8.68 x 8.68 x 1.84 in.)	22.04 x 22.04 x 4.67 cm (8.68 x 8.68 x 1.84 in.)	22.04 x 22.04 x 4.67 cm (8.68 x 8.68 x 1.84 in.)
Weight	1.22 kg (2.7 lb)	1.22 kg (2.7 lb)	1.22 kg (2.7 lb)	1.22 kg (2.7 lb)	1.22 kg (2.7 lb)
Power input	48V DC, 350 mA	48V DC, 350 mA	48V DC, 350 mA	48V DC, 350 mA	48V DC, 350 mA
Power consumption	12.95 W	12.95 W	12.95 W	12.95 W	12.95 W
Power dissipation	12.95 W	12.95 W	12.95 W	12.95 W	12.95 W
Antennas	External	External	External	External	External
Power adapter	AIR-PWR-B Input: 100...240 50/60 Hz VAC Output: 48V DC, 380 mA	AIR-PWR-B Input: 100...240 50/60 Hz VAC Output: 48V DC, 380 mA	AIR-PWR-B Input: 100...240 50/60 Hz VAC Output: 48V DC, 380 mA	AIR-PWR-B Input: 100...240 50/60 Hz VAC Output: 48V DC, 380 mA	AIR-PWR-B Input: 100...240 50/60 Hz VAC Output: 48V DC, 380 mA

Table 46 - Environmental Specifications - Stratix 5100 Wireless Access Point/Workgroup Bridge

Attribute	1783-WAPBK9	1783-WAPAK9	1783-WAPEK9	1783-WAPZK9	1783-WAPCK9
Temperature, operating	-20...+55 °C (-4...+131 °F)	-20...+55 °C (-4...+131 °F)	-20...+55 °C (-4...+131 °F)	-20...+55 °C (-4...+131 °F)	-20...+55 °C (-4...+131 °F)
Temperature, nonoperating/ storage	-30...+85 °C (-22...+185 °F)	-30...+85 °C (-22...+185 °F)	-30...+85 °C (-22...+185 °F)	-30...+85 °C (-22...+185 °F)	-30...+85 °C (-22...+185 °F)
Relative humidity	10...90% noncondensing	10...90% noncondensing	10...90% noncondensing	10...90% noncondensing	10...90% noncondensing

Table 47 - Certifications - Stratix 5100 Wireless Access Point/Workgroup Bridge

Catalog Number	Certifications (when product is marked)(1)	
1783-WAPBK9 Regulatory Domain B	FCC ID: LDK102080	This device complies with Part 15 of FCC rules. Operation is subject to the following two conditions: (1) this device may not cause harmful interference, and (2) this device must accept any interference received, including interference that may cause undesired operations.
1783-WAPAK9 Regulatory Domain A	Industry Canada: 2461B-102080	RSS-210 - License Exempt Radio Apparatus: Category I Equipment
1783-WAPEK9 Regulatory Domain E	CE	For use in the EU, Iceland, Liechtenstein, Norway, Switzerland, Turkey and all other Countries that recognize the EU Directive 1999/5/EC.
1783-WAPZK9 Regulatory Domain Z	E134	For use in Australia, New Zealand and all other Countries that recognize the Radiocommunications (Short Range Devices) Standard.
1783-WAPCK9 Regulatory Domain C	CMIIT ID: 2014AJ2894	For use in China and all other Countries that recognize The Bureau of Radio Administration of MIIT (Fixed Radio Devices).

(1) See the Product Certification link at http://www.ab.com for Declarations of Conformity, Certificates, and other certification details.

Dimensions—Stratix 5100 Wireless Access Point/Workgroup Bridge

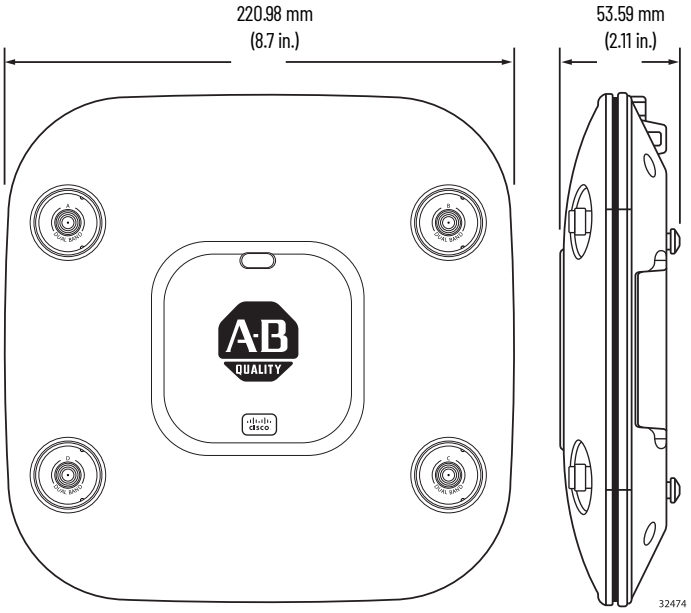

Stratix 5900 Services Router

Table 48 - Technical Specifications - Stratix 5900 Services Router

Attribute	1783-SR
Input voltages	5V, 4 A Class 2 Requires LITEON PA-1220-1SA2 power adapter (100...240V AC, 50/60Hz, 0.8A)
Power consumption, max	11 W
Power dissipation	11 W
Isolation voltage	Not rated
Weight	1.5 kg (3.2 lb)
Wiring category(1)	3 - on power ports 2 - on Ethernet ports
Enclosure type rating	Meets IP41
Router AC Power Adapter(2)	
Input voltage	85...264V AC 100...240V AC nom
Power consumption, max	25 W
Output power, max	20 W (5V DC, 4 A)

(1) Use this conductor category information for planning conductor routing. Refer to Industrial Automation Wiring and Grounding Guidelines, publication 1770-4.1.
(2) AC power adapter is not IP41 rated. Installation must include protection of the adapter and power plug from water.

Table 49 - Environmental Specifications - Stratix 5900 Services Router

Attribute	1783-SR
Temperature, operating IEC 60068-2-1 (Test Ad, Operating Cold), IEC 60068-2-2 (Test Bd, Operating Dry Heat), IEC 60068-2-14 (Test Nb, Operating Thermal Shock)	-25...+60 °C (-13...+140 °F)
Temperature, surrounding air, max	60 °C (140 °F)
Temperature, nonoperating IEC 60068-2-1 (Test Ab, Unpackaged Nonoperating Cold), IEC 60068-2-2 (Test Bb, Unpackaged Nonoperating Dry Heat), IEC 60068-2-14 (Test Na, Unpackaged Nonoperating Thermal Shock)	-40...+85 °C (-40...+185 °F)
Relative humidity IEC 60068-2-30 (Test Db, Unpackaged Damp Heat)	5...95% noncondensing
Vibration IEC 60068-2-64 (Test Fh, Operating)	1.12 Grms random
Operating shock IEC 60068-2-27 (Test Ea, Unpackaged Shock)	15 g
Nonoperating shock IEC 60068-2-27 (Test Ea, Unpackaged Shock)	15 g
Emissions CISPR22 (IEC 61000-6-4)	Class B
ESD immunity IEC 61000-4-2	8 kV contact discharges 15 kV air discharges
Radiated RF immunity IEC 61000-4-3	10V/m with 1 kHz sine-wave 80% AM from 80...2000 MHz 10V/m with 1 kHz sine-wave 80% AM from 2000...2700 MHz
EFT/B immunity IEC 61000-4-4	±500 kV at 5 kHz on Ethernet ports
Surge transient immunity IEC 61000-4-5	±1 kV line-earth (CM) on shielded Ethernet port
Conducted RF immunity IEC 61000-4-6	10V rms with 1 kHz sine-wave 80% AM from 150 kHz...80 MHz
Environmental rating	IP30

Table 50 - Certifications - Stratix 5900 Services Router

Certifications (when product is marked)[1]	1783-SR
c-UL-us	UL Listed Information Technology Equipment, certified for US and Canada. See UL File E136709.
CE	European Union 1999/5/EC R&TTE Directive, compliant with: • EN 55022; ITE Emissions • EN 55024; ITE Immunity • EN 60950; ITE Safety European Union 2011/65/EU RoHS, compliant with: • EN 50581; Technical documentation
RCM	Australian Radiocommunications Act, compliant with: • ACMA EMC Std 08
CCC	GB 4943. 1, GB 9254, YD/T993
KC	Korean Registration of Broadcasting and Communications Equipment, compliant with: Article 58-2 of Radio Waves Act, Clause 3
EAC	Russian Customs Union TR CU 020 EMC Technical Regulation
BSMI	CNS 13438 (95); CNS14336-1 (99) Taiwan

(1) See the Product Certification link at http://www.ab.com for Declarations of Conformity, Certificates, and other certification details.

Dimensions - Stratix 5900 Services Router

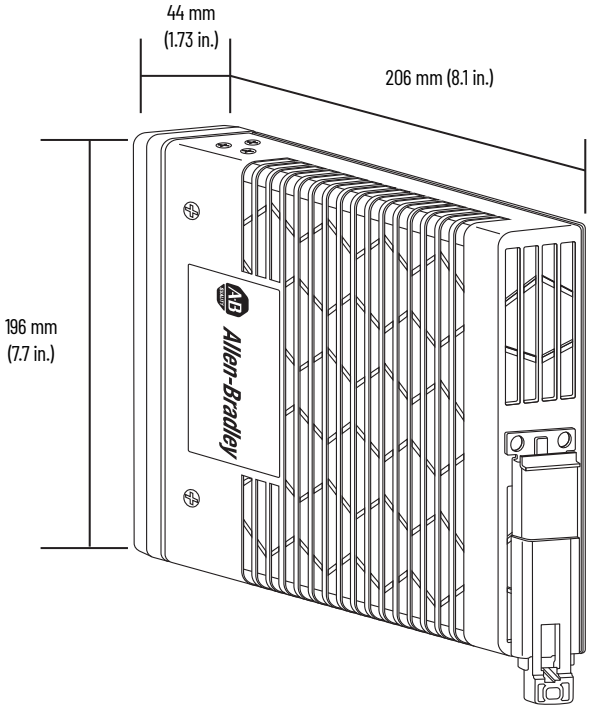

Stratix 5950 Security Appliance

Table 51 - Technical Specifications - Stratix 5950 Security Appliance

Attribute	1783-SAD4T0SBK9, 1783-SAD4T0SPK9, 1783-SAD2T2SBK9, 1783-SAD2T2SPK9
Power consumption	24 W
Power dissipation	24 W
Enclosure type rating	None (open-style)
Voltage and current ratings	12...48V DC, 2.0 A Max – User Supply Alarm relay: 30V DC, 1 A or 48V DC, 0.5 A
Isolation voltage	60V (continuous), Basic Insulation Type, all ports to Ground. No isolation between individual ports.

Table 51 - Technical Specifications - Stratix 5950 Security Appliance (Continued)

Attribute	1783-SAD4T0SBK9, 1783-SAD4T0SPK9, 1783-SAD2T2SBK9, 1783-SAD2T2SPK9
Wire size, Ethernet connection	RJ45 connector according to IEC 60603-7, 2 or 4 pair Category 5e minimum cable according to TIA 568-B.1 or Category 5 cable according to ISO/IEC 24702
Wire size, ground connection	4 mm^2 (12...10 AWG) solid or stranded copper wire
Wire size, alarm connection	0.8...1.0 mm^2 (18...16 AWG) solid or stranded, UL/CSA-rated style 1007 or 1569 twisted-pair copper appliance wiring material (AWM) wire (such as Belden part number 9318), 6.3 mm (0.25 in.) ± 0.5 mm (0.02 in.) strip length
Wire size, DC power connection	0.8...1.0 mm^2 (18...16 AWG) solid or stranded copper wire rated at 75 °C (167 °F) or greater, 1.2 mm (3/64 in.) insulation max, 6.3 mm (0.25 in.) ± 0.5 mm (0.02 in.) strip length
Insulation stripping length	6.3 mm (0.25 in.) ± 0.5 mm (0.02 in.)
Wire type	Copper
Pilot duty rating	Alarm: Not rated
Wiring category(1)	3 - on Console ports 2 -on Power and Alarm ports 2 - on Ethernet ports
Voltage variation IEC 61000-4-29	30 % dip for 10 ms on DC supply ports 60 % dips for 100 ms and 1 s on DC supply ports 100 % dips for 10 ms and 5 s on DC supply ports
Alarm relay	30V DC, 1 A, or 48V DC, 0.5 A
Screw torque, ground terminal	0.4 N•m (3.5 lb•in)
Screw torque, power terminal	0.56 N•m (5 lb•in)
Screw torque, alarm terminal	0.56 N•m (5 lb•in)
North American temp code	T4
ATEX temp code	T4
SFP modules(2)	1783-SFP100FX 1783-SFP100LX 1783-SFP1GSX 1783-SFP1GLX
Memory card replacement	1784-SD1

(1) Use this Conductor Category information for planning conductor routing. Refer to Industrial Automation Wiring and Grounding Guidelines, publication 1770-4.1.
(2) For SFP specifications, see page 81.

Table 52 - Environmental Specifications - Stratix 5950 Security Appliance

Attribute	1783-SAD4T0SBK9, 1783-SAD4T0SPK9, 1783-SAD2T2SBK9, 1783-SAD2T2SPK9
Temperature, operating IEC 60068-2-1 (Test Ad, Operating Cold), IEC 60068-2-2 (Test Bd, Operating Dry Heat), IEC 60068-2-14 (Test Nb, Operating Thermal Shock):	-40...+60 °C (-40...+140 °F)
Temperature, ambient, max	For UL certified enclosed equipment: 60 °C (140 °F)
Temperature, surrounding air, max	For UL certified enclosed equipment: 60 °C (140 °F)
Temperature, nonoperating IEC 60068-2-1 (Test Ab, Unpackaged Nonoperating Cold), IEC 60068-2-2 (Test Bb, Unpackaged Nonoperating Dry Heat), IEC 60068-2-14 (Test Na, Unpackaged Nonoperating Thermal Shock):	-40...+85 °C (-40...+185 °F)
Relative humidity IEC 60068-2-30 (Test Db, Unpackaged Damp Heat)	5...95% noncondensing
Vibration IEC 60068-2-6 (Test Fc, Operating)	1 g @ 5...150 Hz
Shock, operating IEC 60068-2-27 (Test Ea, Unpackaged Shock)	15 g
Shock, nonoperating IEC 60068-2-27 (Test Ea, Unpackaged Shock)	30 g
Emissions	IEC 61000-6-4
ESD Immunity IEC 61000-4-2	6 kV contact discharges 8 kV air discharges
Radiated RF Immunity IEC 61000-4-3	10V/m with 1 kHz sine-wave 80% AM from 80...2000 MHz 10V/m with 200 Hz 50% Pulse 100% AM at 900 MHz 10V/m with 200 Hz 50% Pulse 100% AM at 1890 MHz 1V/m with 1 kHz sine-wave 80% AM from 2000...2700 MHz
EFT/B Immunity IEC 61000-4-4	±2 kV at 5 kHz on power ports ±2 kV at 5 kHz on signal ports ±2 kV at 5 kHz on communications ports
Surge Transient Immunity IEC 61000-4-5	±1 kV line-line(DM) and ±2 kV line-earth(CM) on power ports ±500V line-line(DM) and ±1 kV line-earth(CM) on signal ports ±2 kV line-earth(CM) on communications ports
Conducted RF Immunity IEC 61000-4-6	10V rms with 1 kHz sine-wave 80% AM from 150 kHz...80 MHz
Damped Oscillatory Wave Immunity IEC 61000-4-18	±500V line-line(DM) and ±1 kV line-earth(CM) on signal ports ±1 kV line-line(DM) and ±2.5 kV line-earth(CM) on power ports ±500V line-earth(CM) on communication ports

Table 53 - Certifications - Stratix 5950 Security Appliance

Certifications (when product is marked)[1]	1783-SAD4T0SBK9, 1783-SAD4T0SPK9, 1783-SAD2T2SBK9, 1783-SAD2T2SPK9
c-UL-us	UL Listed Industrial Control Equipment, certified for US and Canada. See UL File E65584 UL Listed for Class I, Division 2 Group A,B,C,D Hazardous Locations, certified for U.S. and Canada. See UL File E194810. UL Listed for Class I, Zone 2 Hazardous Locations, certified for U.S. and Canada. See UL File E194810. • Class 1, Zone 2, Ex nA nC IIC T4 Gc X • Class 1, Zone 2, AEx nA nC IIC T4 Gc
CCC	CCC 2020012310358979 CNCA-C23-01 强制性产品认证实施规则 防爆电气 CNCA-C23-01 CCC Implementation Rule Explosion-Proof Electrical Products
CE	European Union 1999/5/EC R&TTE Directive, compliant with: • EN 61000-6-2; Industrial Immunity • EN 61000-6-4; Industrial Emissions European Union 2011/65/EU RoHS, compliant with: • EN 50581; Technical documentation
RCM	ACMA EMC Std 08
Ex	UK Statutory Instrument 2016 No. 1107 and European Union 2014/34/EU ATEX Directive, compliant with: • EN IEC 60079-0; General Requirements • EN IEC 60079-7; Explosive Atmospheres, Protection "e" • II 3 G Ex ec nC T4 Gc • DEMKO 15 ATEX 1595X, UL22UKEX2732X
UKCA	In conformity with the following UK Statutory Instruments and their amendments: • 2016 No. 1091, Electromagnetic Compatibility Regulations • 2016 No. 1101, Electrical Equipment (Safety) Regulations • 2016 No. 1107, Equipment and Protective Systems Intended for Use in Potentially Explosive Atmospheres Regulations • 2012 No. 3032, Restriction of the Use of Certain Hazardous Substances in Electrical and Electronic Equipment
KCC	KN11 (Group1, Class A), IEC61000-6-2
EAC	Russian Customs Union TR CU 020 EMC Technical Regulation
BSMI	CNS 13438 (95); CNS14336-1 (99) Taiwan

(1) See the Product Certification link at http://www.ab.com for Declarations of Conformity, Certificates, and other certification details.

Dimensions - Stratix 5950 Security Appliance

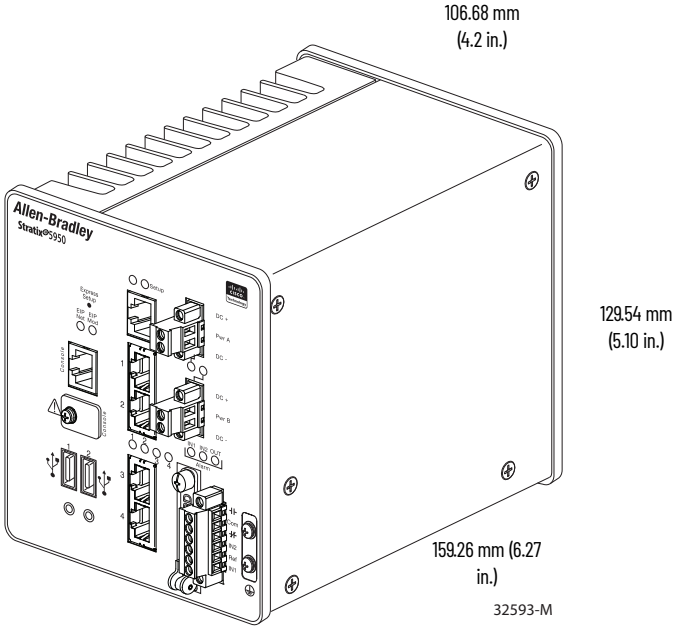

Embedded Switch Technology

Table 54 - Technical Specifications - Ethernet Taps

Attribute	1783-ETAP, 1783-ETAPK	1783-ETAP1F, 1783-ETAP1FK	1783-ETAP2F, 1783-ETAP2FK
Description	EtherNet/IP tap 3 copper ports	EtherNet/IP tap • 2 copper ports • 1 fiber port	EtherNet/IP tap • 1 copper port • 2 fiber ports
Tap type	Copper	Fiber, single-port	Fiber, dual-port
Current consumption, max	125 mA @ 24V DC	200 mA @ 24V DC	260 mA @ 24V DC
DC power supply voltage rating	24V DC (20.4...27.6V DC) CL 2/SELV		
Isolation voltage	30V (continuous), basic insulation type, network channels to power and network channels to network channels		
	Type tested at 1250V DC for 60 s	Type tested at 853V AC for 60 s	
Power consumption, max	3 W	4.8 W	6.24 W
Power dissipation	3 W	4.8 W	6.24 W
Wire size, Ethernet connection(1)	RJ45 connector according to IEC 60603-7, 2- or 4-pair Category 5e minimum cable according to TIA 568-B.1 or Category 5 cable according to ISO/IEC 24702		
Wire size, DC power connection	One 0.33...3.3 mm^2 (22...12 AWG) or two 0.33...1.3 mm^2 (22...16 AWG) solid or stranded copper wire rated at 75 °C (167 °F) or greater, 1.2 mm (3/64 in.) insulation max		
Screw torque, power terminal	0.6...0.8 N•m (5...7 in•lb)		
Wiring category(2)	1 - on power ports 2 - on communication ports		
Enclosure type rating	None (open-style)		
North American temp code	T5	T4A	T4
IEC temp code	T5	T4	T4

(1) See page 83 for recommended products.
(2) Use this conductor category information for planning conductor routing. Refer to Industrial Automation Wiring and Grounding Guidelines, publication 1770-4.1.

Table 55 - Technical Specifications - Ethernet Tap Fiber Connections

Attribute	1783-ETAP1F, 1783-ETAP1FK, 1783-ETAP2F, 1783-ETAP2FK
Fiber transceiver type	100Base-FX IEEE802.3u
Optical wavelength	1310 nm no cap
Transmitter launch power at Beginning of Life (BOL), min Allow -1 dB at End of Life (EOL)	-19 dBm into 62.5/125 µm fiber, N/A = 0.275 -22.5 dBm into 50/125 µm fiber, N/A = 0.20
Receiver sensitivity, min	-31.8 dBm
Receiver sensitivity, max	-14 dBm
Fiber channel power budget at rated BER (2 connected taps, either 1783-ETAP1F or 1783-ETAP2F)	12.8 dB for 62.5/125 µm multimode fiber 9.3 dB for 50/125 µm multimode fiber
Fiber connection, glass	62.5/125 µm and 50/125 µm multimode fiber
Fiber connection, simplex or duplex	Jacket type and jacket diameter is dependent on connector selection
Fiber connection, graded index (GI)	Per IEC 60794-1-1, IEC 60793-2-10 category A1 fibers
Connector type	IEC 61754-20 LC connector, maximum insertion loss 0.75 dB per connection
Channel length, max	2 km (1.24 mi) (1)

(1) The channel (connectors and cable) must not exceed the allowable power budget.

Table 56 - Environmental Specifications - Ethernet Taps

Attribute	1783-ETAP, 1783-ETAPK	1783-ETAP1F, 1783-ETAP1FK, 1783-ETAP2F, 1783-ETAP2FK
Temperature, operating IEC 60068-2-1 (Test Ad, Operating Cold) IEC 60068-2-2 (Test Bd, Operating Dry Heat) IEC 60068-2-14 (Test Nb, Operating Thermal Shock)	-25...+70 °C (-13...+158 °F)	-25...+60 °C (-13...+140 °F)
Temperature, surrounding air, max	70° C (158 °F)	60° C (140 °F)
Temperature, nonoperating IEC 60068-2-1 (Test Ab, Unpackaged Nonoperating Cold) IEC 60068-2-2 (Test Bb, Unpackaged Nonoperating Dry Heat) IEC 60068-2-14 (Test Na, Unpackaged Nonoperating Thermal Shock)	-40...+85 °C (-40...+185 °F)	

Table 56 - Environmental Specifications - Ethernet Taps

Attribute	1783-ETAP, 1783-ETAPK	1783-ETAP1F, 1783-ETAP1FK, 1783-ETAP2F, 1783-ETAP2FK
Relative humidity IEC 60068-2-30 (Test Db, Unpackaged Damp Heat)	5...95% noncondensing	
Vibration IEC 60068-2-6 (Test Fc, Operating)	5 g @ 10...500 Hz	
Shock, operating IEC 60068-2-27 (Test Ea, Unpackaged Shock)	30 g	
Shock, nonoperating IEC 60068-2-27 (Test Ea, Unpackaged Shock)	50 g	
Emissions CISPR11 (IEC 61000-6-4)	Class A	
ESD immunity IEC 61000-4-2	6 kV contact discharges 8 kV air discharges	
Radiated RF immunity IEC 61000-4-3	10V/m with 1 kHz sine-wave 80% AM from 80...2000 MHz 10V/m with 200 Hz 50% Pulse 100% AM at 900 MHz 10V/m with 200 Hz 50% Pulse 100% AM at 1890 MHz 3V/m with 1 kHz sine-wave 80% AM from 2000...2700 MHz	
EFT/B immunity IEC 61000-4-4	±4 kV at 5 kHz on power ports ±3 kV at 5 kHz on communication ports	
Surge transient immunity IEC 61000-4-5	±1 kV line-line (DM) and ±2 kV line-earth (CM) on power ports ±2 kV line-earth (CM) on communication ports	
Conducted RF immunity IEC 61000-4-6	10V rms with 1 kHz sine-wave 80% AM from 150 kHz...80 MHz	
Voltage variation IEC 61000-4-29	10 ms interruption on DC supply ports	

Table 57 - Certifications - Ethernet Taps

Certification[1]	1783-ETAP, 1783-ETAPK	1783-ETAP1F, 1783-ETAP1FK, 1783-ETAP2F, ETAP2FK
BSMI	CNS 13438 (95); CNS14336-1 (99) Taiwan	
c-UL-us	UL Listed Industrial Control Equipment, certified for US and Canada. See UL File E65584. UL Listed for Class I, Division 2 Group A,B,C,D Hazardous Locations, certified for U.S. and Canada. See UL File E194810.	
CCC	CNCA-C23-01 强制性产品认证实施规则 防爆电气 CNCA-C23-01 CCC Implementation Rule Explosion-Proof Electrical Products CCC 2020122309112015,2020122309112016	
CE	European Union 2004/108/EC EMC Directive, compliant with: • EN 61326-1; Meas./Control/Lab., Industrial Requirements • EN 61000-6-2; Industrial Immunity • EN 61000-6-4; Industrial Emissions • EN 61131-2; Programmable Controllers (Clause 8, Zone A and B) European Union 2011/65/EU RoHS, compliant with: • EN 63000; Technical Documentation	
C-Tick	Australian Radiocommunications Act, compliant with: • AS/NZS CISPR 11; Industrial Emissions	
EtherNet/IP	ODVA conformance tested to EtherNet/IP specifications	
Ex	European Union 2014/34/EU ATEX Directive, compliant with: • EN 60079-7; Potentially Explosive Atmospheres, Protection "e" • EN 60079-0; General Requirements • II 3 G Ex ec IIC T5 X	
KC	Korean Registration of Broadcasting and Communications Equipment, compliant with: • Article 58-2 of Radio Waves Act, Clause 3	
UKCA	2016 No. 1091 – Electromagnetic Compatibility Regulations 2016 No. 1107 – Equipment and Protective Systems Intended for Use in Potentially Explosive Atmospheres Regulations 2012 No. 3032 – Restriction of the Use of Certain Hazardous Substances in Electrical and Electronic Equipment Regulations	

(1) When product is marked. See the Product Certification link at http://www.ab.com for Declarations of Conformity, Certificates, and other certification details.

Dimensions —Ethernet Taps

This illustration shows dimensions for the 1783-ETAP tap. The dimensions for the other catalog numbers are the same.

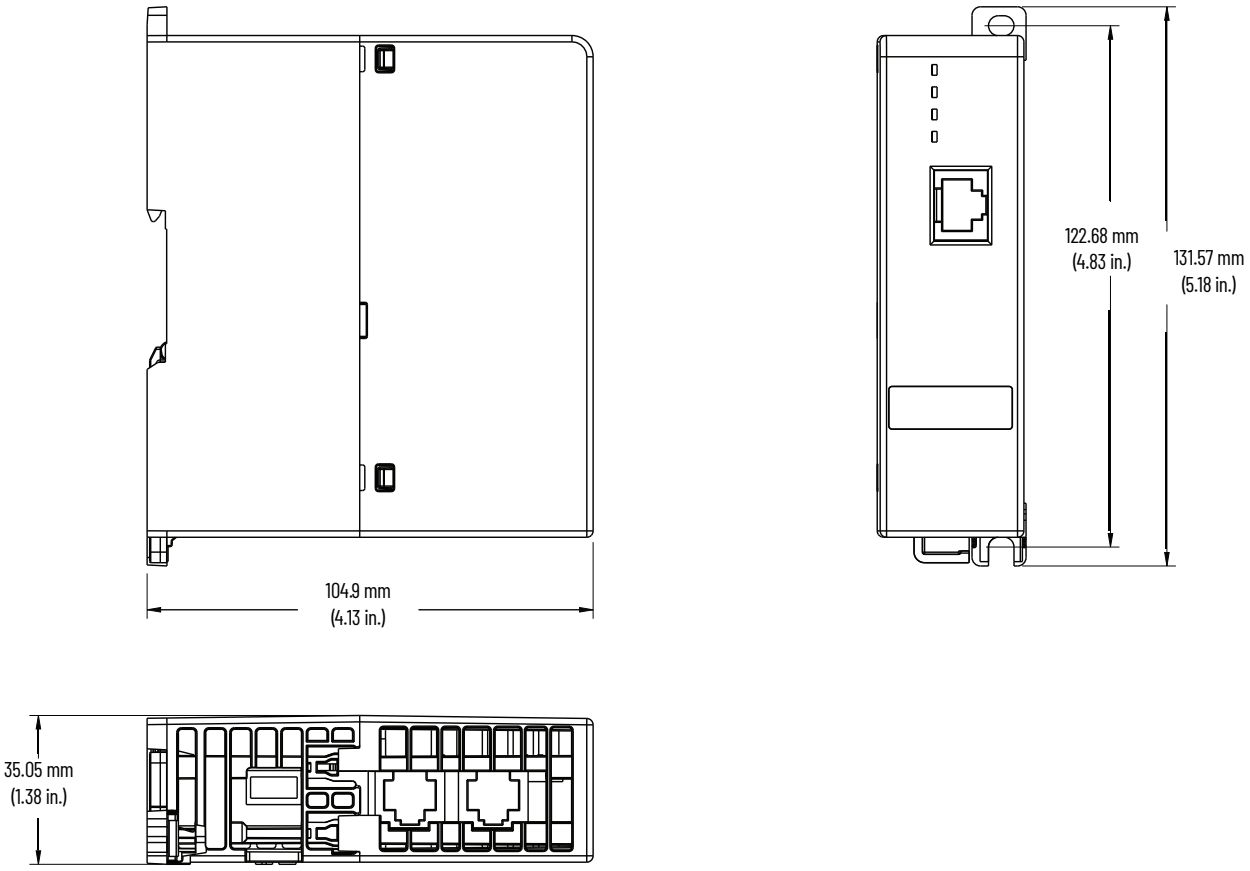

Configurable NAT Router

Table 58 - Technical Specifications - Configurable NAT Router

Attribute	1783-NATR
Enclosure type rating	None (open-style)
Voltage and current ratings	DC power supply input: 20.4...27.6V DC/limited voltage Current rating: 150 mA
Power consumption, max	3 W
Isolation voltage	Functional insulation type (IEC-61010-2-201), Ethernet Ports to Power ports
Wire size, power connection	Single wire: 0.33...3.3 mm^2 (22...12 AWG) stranded copper wire rated at 75 °C (167 °F), or greater, 1.2 mm (3/64 in.) insulation max Double wire: 0.33...1.3 mm^2 (22...16 AWG) solid copper wire rated at 75 °C (167 °F), or greater, 1.2 mm (3/64 in.) insulation max
Wiring category(1)	2 - on power ports 2 - on Ethernet ports
North American temp code	T4
ATEX temp code	T4
IECEx temp code	T4

(1) Use this Conductor Category information for planning conductor routing. Refer to Industrial Automation Wiring and Grounding Guidelines, publication 1770-4.1.

Table 59 - Environmental Specifications - Configurable NAT Router

Attribute	1783-NATR
Temperature, operating IEC 60068-2-1 (Test Ad, Operating Cold) IEC 60068-2-2 (Test Bd, Operating Dry Heat) IEC 60068-2-14 (Test Nb, Operating Thermal Shock)	-25...+70 °C (-13...+158 °F)
Temperature, surrounding air, max	70 °C (158 °F)
Temperature, nonoperating IEC 60068-2-1 (Test Ab, Unpackaged Nonoperating Cold) IEC 60068-2-2 (Test Bb, Unpackaged Nonoperating Dry Heat) IEC 60068-2-14 (Test Na, Unpackaged Nonoperating Thermal Shock)	-40...+85 °C (-40...+185 °F)
Relative humidity IEC 60068-2-30 (Test Db, Unpackaged Damp Heat)	5...95% noncondensing
Vibration IEC 60068-2-6 (Test Fc, Operating)	5 g @ 10...500 Hz
Shock, operating IEC 60068-2-27 (Test Ea, Unpackaged Shock)	30 g
Shock, nonoperating IEC 60068-2-27 (Test Ea, Unpackaged Shock)	50 g
Emissions	IEC 61000-6-4
ESD immunity IEC 61000-4-2	6 kV contact discharges 8 kV air discharges
Radiated RF immunity IEC 61000-4-3	10V/m with 1 kHz sine-wave 80% AM from 80...2000 MHz 10V/m with 200 Hz 50% pulse 100% AM at 900 MHz 10V/m with 200 Hz 50% pulse 100% AM at 1890 MHz 3V/m with 1 kHz sine-wave 80% AM from 2000...2700 MHz
EFT/B immunity IEC 61000-4-4	±2 kV at 5 kHz on power ports ±2 kV at 5 kHz on Ethernet ports
Surge transient immunity IEC 61000-4-5	±1 kV line-line (DM) and ±2 kV line-earth (CM) on power ports ±2 kV line-earth (CM) on Ethernet ports
Conducted RF immunity IEC 61000-4-6	10V rms with 1 kHz sine-wave 80% AM from 150 kHz...80 MHz

Table 60 - Certifications - Configurable NAT Router

Certification[1]	1783-NATR
c-UL-us	UL Listed Industrial Control Equipment, certified for US and Canada. See UL File E65584. UL Listed for Class I, Division 2 Group A,B,C,D Hazardous Locations, certified for U.S. and Canada. See UL File E194810.
CE	European Union 2004/108/EC EMC Directive, compliant with: • EN 61326-1; Meas./Control/Lab., Industrial Requirements • EN 61000-6-2; Industrial Immunity • EN 61000-6-4; Industrial Emissions • EN 61131-2; Programmable Controllers (Clause 8, Zone A & B)
RCM	Australian Radiocommunications Act, compliant with: • EN 61000-6-4; Industrial Emissions
Ex	European Union 94/9/EC ATEX Directive, compliant with: • EN 60079-0; General Requirements • EN 60079-15; Potentially Explosive Atmospheres, Protection "n" • II 3 G Ex nA IIC T4 Gc • DEMKO 15 ATEX 1459X
IECEx	IECEx System, compliant with: • IEC 60079-0; General Requirements • IEC 60079-15; Potentially Explosive Atmospheres, Protection "n" • II 3 G Ex nA IIC T4 Gc • IECEx UL 15.0026X
KC	Korean Registration of Broadcasting and Communications Equipment, compliant with: Article 58-2 of Radio Waves Act, Clause 3
EtherNet/IP	ODVA conformance tested to EtherNet/IP specifications
BSMI	CNS 13438 (95); CNS14336-1 (99) Taiwan

(1) When product is marked. See the Product Certification link at http://www.ab.com for Declarations of Conformity, Certificates, and other certification details.

Dimensions - Configurable NAT Router

This illustration shows dimensions for the 1783-NATR device.

When mounting the 1783-NATR device, allow a minimum clearance between the device and adjacent equipment of 2.54 cm (1 in.) on all sides.

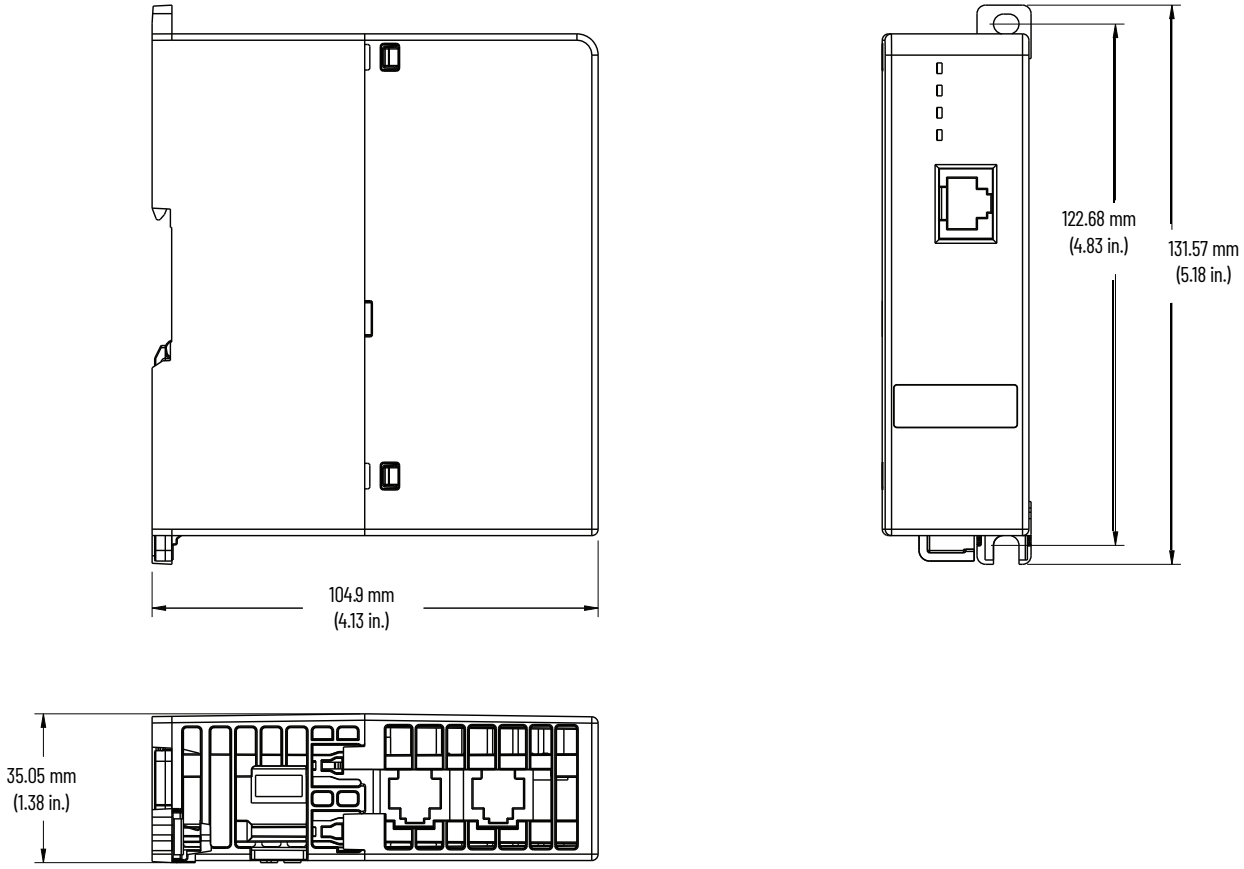

CIP Security Proxy

Table 61 - Technical Specifications - CIP Security Proxy

Attribute	1783-CSP
Packet Rate Capacity (packets/second)	I/O: • 10,000 pps HMI and MSG (while 10,000 class 1 is occurring): • 1,300 pps without CIP Security • 1,000 pps with integrity • 900 pps with integrity and confidentiality
Enclosure type rating	None (open-style)
DC power supply voltage rating	24V DC (18...32V DC)
Power consumption, max	4 W
Current consumption, max	220 mA
Ethernet connections	• RJ45 connector according to IEC 60603-7 • 2 or 4 pair Category 5e minimum cable according to TIA 568-B.1 or Category 5 cable according to ISO/IEC 24702
Device connections	• RJ45 connector according to IEC 60603-7 • 2 or 4 pair Category 5e minimum cable according to TIA 568-B.1 or Category 5 cable according to ISO/IEC 24702
DC power connections	One 0.33...3.3 mm^2 (22...12 AWG) or two 0.33...1.3 mm^2 (22...16 AWG) solid or stranded copper wire(s) rated at 75 °C (167 °F) or greater, 1.2 mm (3/64 in.) insulation max
Torque, power connector	0.6...0.8 N•m (5...7 lb•In)
Isolation voltage	
North American temp code	T4
ATEX temp code	T4
IECEx temp code	T4

Table 62 - Environmental Specifications - CIP Security Proxy

Attribute	1783-CSP
Temperature, operating IEC 60068-2-1 (Test Ad, Operating Cold) IEC 60068-2-2 (Test Bd, Operating Dry Heat) IEC 60068-2-14 (Test Nb, Operating Thermal Shock)	-25 °C < Ta < + 70 °C (-13 °F < Ta < +158 °F)
Temperature, surrounding air, max	70 °C (158 °F)
Temperature, nonoperating IEC 60068-2-1 (Test Ab, Unpackaged Nonoperating Cold) IEC 60068-2-2 (Test Bb, Unpackaged Nonoperating Dry Heat) IEC 60068-2-14 (Test Na, Unpackaged Nonoperating Thermal Shock)	-40...+85 °C (-40...+185 °F)
Relative humidity IEC 60068-2-30 (Test Db, Unpackaged Damp Heat)	5...95% noncondensing
Vibration IEC 60068-2-6 (Test Fc, Operating)	2 g @ 10...500 Hz
Shock, operating IEC 60068-2-27 (Test Ea, Unpackaged Shock)	15 g
Shock, nonoperating IEC 60068-2-27 (Test Ea, Unpackaged Shock)	30 g
Emissions	IEC 61000-6-4
ESD immunity IEC 61000-4-2	6 kV contact discharges 8 kV air discharges
Radiated RF immunity IEC 61000-4-3	10V/m with 1 kHz sine-wave 80% AM from 80...2000 MHz 10V/m with 200 Hz 50% pulse 100% AM at 900 MHz 10V/m with 200 Hz 50% pulse 100% AM at 1890 MHz 3V/m with 1 kHz sine-wave 80% AM from 2000...2700 MHz 3V/m with 1 kHz sine-wave 80% AM from 2700...6000 MHz
EFT/B immunity IEC 61000-4-4	±3 kV at 5 kHz on power ports ±3 kV at 5 kHz on communication ports
Surge transient immunity IEC 61000-4-5	±1 kV line-line (DM) and ±2 kV line-earth (CM) on power ports ±2 kV line-earth (CM) on communication ports
Conducted RF immunity IEC 61000-4-6	10V rms with 1 kHz sine-wave 80% AM from 150 kHz...80 MHz

Table 63 - Certifications - CIP Security Proxy

Certification[1]	1783-CSP
c-UL-us	UL Listed Industrial Control Equipment, certified for US and Canada. See UL File E194810
CE	European Union 2014/30/EU EMC Directive, compliant with: • EN 61326-1; Meas./Control/Lab., Industrial Requirements • EN 61000-6-2; Industrial Immunity • EN 61000-6-4; Industrial Emissions • EN 61131-2; Programmable Controllers (Clause 8, Zone A & B) European Union 2011/65/EU RoHS, compliant with: • EN 50581; Technical documentation
RCM	Australian Radiocommunications Act, compliant with: • EN 61000-6-4; Industrial Emissions
Ex	European Union 2014/34/EU ATEX Directive, compliant with: • EN 60079-0; General Requirements • EN 60079-7; Explosive Atmospheres, Protection "e" • II 3 G Ex ec IIC T4 Gc • DEMKO 20 ATEX 2349X
IECEx	IECEx System, compliant with: • IEC 60079-0; General Requirements • IEC 60079-7; Explosive Atmospheres, Protection "e" • II 3 G Ex ec IIC T4 Gc • IECEx UL 20.0023X
EtherNet/IP	ODVA conformance tested to EtherNet/IP specifications

(1) See the Product Certification link at rok.auto/certifications for Declarations of Conformity, Certificates, and other certification details.

Dimensions - CIP Security Proxy

This illustration shows dimensions for the 1783-CSP CIP Security™ proxy.

When mounting the 1783-CSP CIP Security proxy, leave a minimum clearance between the device and adjacent equipment of 2.54 cm (1 in.) on all sides.

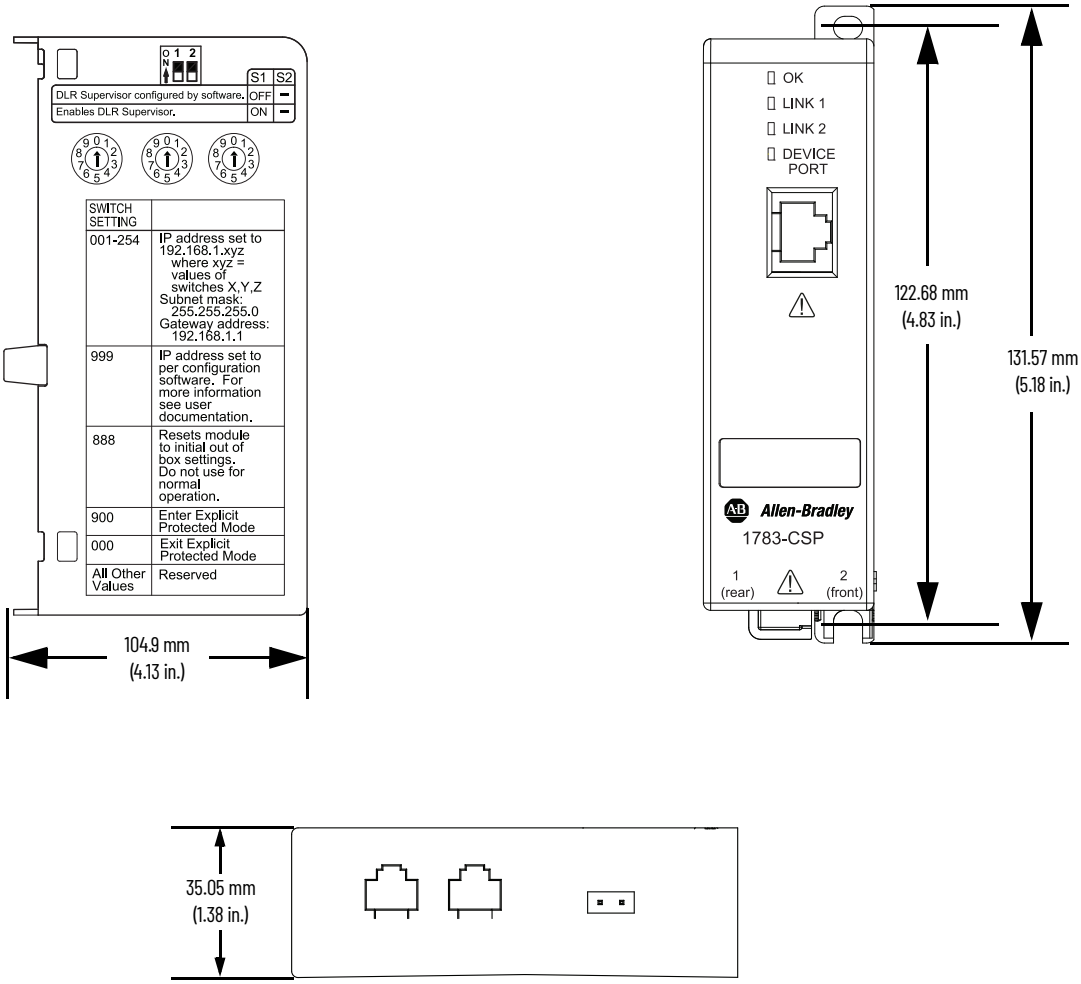

Accessories

Small Form-factor Pluggable (SFP) Modules

Table 64 - SFP Modules Technical Specifications

Cat. No.	Description	Interface Connector	Wavelength (nm)	Core Size/ Cladding Size (micron)	Modal Bandwidth (MHz/km)	Cable Length	DOM[1]	Transmit Power (dBm)	Receive Power (dBm)
1783-SFP100FX	100BASE-FX multimode fiber	Dual LC	1310	50/125	500	2 km (6562 ft)	Yes	-14 (max)...-20 (min)	-14 (max)...-31 (min)
				62.5/125	500				
1783-SFP100LX	100BASE-LX singlemode fiber	Dual LC	1310	G.652	—	10 km (32,808 ft)	Yes	-8 (max)...-15 (min)	-8 (max)...-28 (min)
1783-SFP100EXC	100BASE-EX singlemode fiber	Dual LC	1310	G.652[2]	—	40 km (131,234 ft)	No	0 (max)...-5 (min)	-8 (max)...-28 (min)
1783-SFP100ZXC	100BASE-ZX singlemode fiber	Dual LC	1550	G.652[2]	—	80 km (262,467 ft)	No	+2 (max)...-3 (min)	-8 (max)...-30 (min)
1783-SFP100T[3]	100BASE-T copper	RJ-45	—	—	—	100 m (328 ft)	No	—	—
1783-SFP1GSX	1000BASE-SX multimode fiber	Dual LC	850	62.5/125	160	220 m (722 ft)	Yes	-3 (max)...-9.5 (min)	0 (max)...-17 (min)
				62.5/125	200	275 m (902 ft)			
				50/125	400	500 m (1640 ft)			
				50/125	500	550 m (1804 ft)			
1783-SFP1GLX	1000BASE-LX/LH singlemode fiber	Dual LC	1310	G.652	—	10 km (32,808 ft)	Yes	-3 (max)...-9.5 (min)	-3 (max)...-20 (min)
1783-SFP1GEXE[4]	1000BASE-EX singlemode fiber	Dual LC	1310	G.652[2]	—	40 km (131,234 ft)	Yes	+3 (max)... -1 (min)	+1 (max)...-22 (min)
1783-SFP1GZX[5]	1000BASE-ZX singlemode fiber	Dual LC	1550	G.652[2]	—	70 km (229,659 ft)	Yes	+5 (max)...0 (min)	-3 (max)...-23 (min)
1783-SFP1GTE	1000BASE-T copper	RJ-45	—	—	—	100 m (328 ft)	No	—	—
1783-SFP10GSRE	10GBASE-SR multimode fiber	Dual LC	850	62.5/125	160 (FDDI)	26 m (85 ft)	Yes	-1.2 (max)...-7.3 (min)	-1.0 (max)...-9.9 (min)
				62.5/125	200 (OM1)	33 m (108 ft)			
				50/125	400	66 m (216 ft)			
				50/125	500 (OM2)	82 m (269 ft)			
				50/125	2000	300 m (984 ft)			
				50/125	4700	400 m (1312 ft)			
1783-SFP10GLRE	10GBASE-LR singlemode fiber	Dual LC	1310	G.652[2]	—	10 km (32,808 ft)	Yes	+0.5 (max)...-8.2 (min)	+0.5 (max)...-14.4 (min)

(1) Digital Optical Monitoring (DOM) iis supported on the switches via the command-line interface (CLI).
(2) ITU-T G.652 SMF as specified by the IEEE 802.3z standard.
(3) The 1783-SFP100T module requires Stratix 5400 or 5410 firmware revision 3.001or later, Stratix 5700 firmware revision 8.001or later, or Stratix 8000 firmware revision 12.001 or later.
(4) The 1783-SFP1GEXE module operates on standard single-mode fiber-optic link spans of up to 40 km in length. For back-to-back connectivity, insert a 5-dB inline optical attenuator between the fiber-optic cable and the receiving port on the SFP module at each end of the link.
(5) When shorter distances of single-mode fiber (SMF) are used, you can avoid overloading the receiver by inserting an inline optical attenuator in the link. If the fiber-optic cable span loss is less than 8 dB, insert a10-dB inline optical attenuator between the fiber-optic cable plant and the receiving port on the SFP module at each end of the link.

Table 65 - SFP Modules Temperature Ratings

Cat. No.	Commercial(1) 0 ...+70 °C (+32 ...+158 °F)	Extended(1) -5 ...+85 °C (+23...+185 °F)	Industrial(1) -40 ...+85 °C (-40...+185 °F)
1783-SFP100FX	No	No	Yes
1783-SFP100LX	No	No	Yes
1783-SFP100EXC	Yes	No	No
1783-SFP100ZXC	Yes	No	No
1783-SFP100T	No	No	Yes
1783-SFP1GSX	No	No	Yes
1783-SFP1GLX	No	No	Yes
1783-SFP1GEXE	No	Yes	No
1783-SFP1GZX	No	No	Yes
1783-SFP1GTE	No	Yes	No
1783-SFP10GSRE	No	Yes	No
1783-SFP10GLRE	No	Yes	No

(1) Once you install SFP modules in the switch, the overall temperature rating of the combined modules (switch and SFP modules) is limited to the lowest maximum temperature rating and the highest minimum temperature rating.

Table 66 - SFP and Switch Compatibility

Cat. No.	Stratix 2000(1) (2)	Stratix 5400	Stratix 5410	Stratix 5700	Stratix 5800	Stratix 5950	Stratix 6000	Stratix 8000	Stratix 8300
1783-SFP100FX	Supported	Supported	Supported	Supported	Supported	Supported	Not Supported	Supported	Supported
1783-SFP100LX	Supported	Supported	Supported	Supported	Supported	Supported	Not Supported	Supported	Supported
1783-SFP100EXC	Supported	Supported	Supported	Supported	Supported	Not Supported	Not Supported	Supported	Supported
1783-SFP100ZXC	Supported	Supported	Supported	Supported	Supported	Not Supported	Not Supported	Supported	Supported
1783-SFP100T(3)	Not Supported	Supported	Supported	Supported	Not Supported	Not Supported	Not Supported	Supported	Not Supported
1783-SFP1GSX(4)	Supported	Supported	Supported	Supported	Supported	Supported	Supported	Supported	Supported
1783-SFP1GLX(4)	Supported	Supported	Supported	Supported	Supported	Supported	Supported	Supported	Supported
1783-SFP1GEXE(4)	Supported	Supported	Supported	Supported	Supported	Not Supported	Not Supported	Supported	Supported
1783-SFP1GZX(4)	Supported	Supported	Supported	Supported	Supported	Not Supported	Not Supported	Supported	Supported
1783-SFP1GTE(4)	Not Supported	Supported	Supported	Supported	Supported	Not Supported	Not Supported	Supported	Supported
1783-SFP10GSRE	Not Supported	Not Supported	Supported	Not Supported	Not Supported	Not Supported	Not Supported	Not Supported	Not Supported
1783-SFP10GLRE	Not Supported	Not Supported	Supported	Not Supported	Not Supported	Not Supported	Not Supported	Not Supported	Not Supported

(1) The SFP modules shown in this table for Stratix 2000 switches must be ordered separately and are not the same as the preinstalled SFP modules that ship with the switches.
(2) Stratix 2000 Gigabit Ethernet (GE) SFP slots support only GE SFP modules 1783-SFP1GSX,1783-SFP1GLX, 1783-SFP1GEXE, and 1783-SFP1GZX.
(3) The 1783-SFP100T module requires Stratix 5400 or 5410 firmware revision 3.001or later, Stratix 5700 firmware revision 8.001or later, or Stratix 8000 firmware revision 12.001 or later.
(4) Gigabit Ethernet (GE) SFP modules work only in GE SFP slots.

Memory Cards

Cat. No.	Description	Compatibility
1784-SD1	1 GB industrial SD card	Stratix 5700 Stratix 5950
1784-SDHC8	8 GB industrial SDHC card	Stratix 5800
1783-MCF	CompactFlash card (spare)	Stratix 8000
1783-RMCF	CompactFlash card (spare)	Stratix 8300

Ethernet Cables

Cat. No.	Category	Description
Industrial Ethernet Patchcords[1]		
RJ45 to RJ45		
1585J-M8TBJM-2	Category 5	Male RJ45 to male RJ45, unshielded twisted pair, teal, high-flex TPE, 8-conductor (4-pair), 2 m (6.56 ft) cable
1585J-M4TBJM-2		Male RJ45 to male RJ45, unshielded twisted pair, teal, high-flex TPE, 4-conductor (2-pair), 2 m (6.56 ft) cable
1585J-M8UBJM-2		Male RJ45 to male RJ45, foil and braided shield, teal, high-flex PUR, 8-conductor (4-pair), 2 m (6.56 ft) cable
1585J-M4UBJM-2		Male RJ45 to male RJ45, foil and braided shield, teal, high-flex PUR, 4-conductor (2-pair), 2 m (6.56 ft) cable
1585J-M8PBJM-2		Male RJ45 to male RJ45, unshielded twisted pair, teal, riser PVC, 8-conductor (4-pair), 2 m (6.56 ft) cable
1585J-M4PBJM-2		Male RJ45 to male RJ45, unshielded twisted pair, teal, riser PVC, 4-conductor (2-pair), 2 m (6.56 ft) cable
1585J-M8HBJM-2		Male RJ45 to male RJ45, foil shield, teal, 600V PVC, 8-conductor (4-pair), 2 m (6.56 ft) cable
1585J-M4HBJM-2		Male RJ45 to male RJ45, foil shield, teal, 600V PVC, 4-conductor (2-pair), 2 m (6.56 ft) cable
1585J-M8TGJM-2	Category 6	Male RJ45 to male RJ45, foil shield, teal, high-flex TPE, 8-conductor (4-pair), 2 m (6.56 ft) cable
M12 to M12, D-code		
1585D-M4TBDM-2	Category 5e	M12 D-code to M12 D-code, unshielded twisted pair, teal, high-flex TPE, 4-conductor (2-pair), 2 m (6.56 ft) cable
1585D-M4UBDM-2		M12 D-code to M12 D-code, foil and braided shield, teal, high-flex PUR, 4-conductor (2-pair), 2 m (6.56 ft) cable
1585D-M4PBDM-2		M12 D-code to M12 D-code, foil and braided shield, teal, riser PVC, 4-conductor (2-pair), 2 m (6.56 ft) cable
M12 X-code to M12 X-code		
1585D-M8TGDM-2	Category 6	M12 X-code to M12 X-code, foil and braided shield, teal, high-flex TPE, 8-conductor (4-pair), 2 m (6.56 ft) cable
Industrial Ethernet Cable Spools[2]		
1585-C8TB-S100	Category 5e	Cable spool, unshielded twisted pair, teal, high-flex TPE, 8-conductor (4-pair), 100 m (328.08 ft)
1585-C8UB-S100		Cable spool, foil and braided shield, teal, high-flex PUR, 8-conductor (4-pair), 100 m (328.08 ft)
1585-C8PB-S100		Cable spool, unshielded twisted pair, teal, riser PVC, 8-conductor (4-pair), 100 m (328.08 ft)
1585-C8HB-S100		Cable spool, foil shield, teal, 600V PVC, 8-conductor (4-pair), 100 m (328.08 ft)
Accessories		
1585J-M8CC-H	Category 5e	RJ45 IDC connector
1585D-M4DC-H		M12 D-code IDC connector
1585D-M4DC-SH		M12 D-code IDC connector compatible with 600V cable spools

(1) Patchcords are available in lengths of up to 80 m (262.46 ft) in 0.1 m (0.328 ft) increments. Refer to http://www.ab.com/catalogs for full product offering.
(2) Cable spools are available in 100,300 m (328.08 ft) and 600 m (1968.5 ft) lengths.

Additional Resources

These documents contain additional information concerning related products from Rockwell Automation. You can view or download publications at rok.auto/literature.

Resource	Description
Configurable NAT Router User Manual, publication 1783-UM008	Describes how to install, configure, and troubleshoot the NAT router.
EtherNet/IP Industrial Protocol White Paper, publication ENET-WP001	Describes how to implement services and data objects on a TCP/UDP/IP based Ethernet network.
Stratix Managed Switches User Manual, publication 1783-UM007	Describes how to configure and troubleshoot Stratix 5400, 5410, 5700, 8000, 8300, and ArmorStratix 5700 switches.
Stratix 2000 Ethernet Unmanaged Switches User Manual, publication 1783-UM011	Describes how to use DIP switches and status indicators on Stratix 2000 switches.
Stratix 2500 Lightly Managed Switches User Manual, publication 1783-UM009	Describes how to configure and troubleshoot Stratix 2500 switches.
Stratix 5800 Ethernet Managed Switches User Manual, publication 1783-UM012	Describes how to configure and troubleshoot Stratix 5800 switches.
Stratix 6000 Ethernet Managed Switches User Manual, publication 1783-UM001	Describes how to configure and troubleshoot Stratix 6000 switches.
Stratix 5100 Wireless Access Point/Workgroup Bridge User Manual, publication 1783-UM006	Describes how to install, configure, and troubleshoot the wireless access point.
Stratix 5900 Services Router User Manual, publication 1783-UM005	Describes how to install, configure, and troubleshoot the router.
Stratix 5950 Security Appliance User Manual, publication 1783-UM010	Describes how to install, configure, and troubleshoot the security appliance.
CIP Security Proxy User Manual, publication 1783-UM013	Describes how to configure an troubleshoot the CIP Security proxy.
EtherNet/IP Network Devices User Manual, ENET-UM006	Describes how to configure and use EtherNet/IP devices to communicate on the EtherNet/IP network.
Ethernet Reference Manual, ENET-RM002	Describes basic Ethernet concepts, infrastructure components, and infrastructure features.
Industrial Automation Wiring and Grounding Guidelines, publication 1770-4.1	Provides general guidelines for installing a Rockwell Automation industrial system.
Product Certifications website, rok.auto/certifications.	Provides declarations of conformity, certificates, and other certification details.
Industrial Components Preventive Maintenance, Enclosures, and Contact Ratings Specifications, publication IC-TD002	Provides a quick reference tool for Allen-Bradley industrial automation controls and assemblies.
Safety Guidelines for the Application, Installation, and Maintenance of Solid-state Control, publication SGI-1.1	Designed to harmonize with NEMA Standards Publication No. ICS 1.1-1987 and provides general guidelines for the application, installation, and maintenance of solid-state control in the form of individual devices or packaged assemblies incorporating solid-state components.

Rockwell Automation Support

Use these resources to access support information.

Technical Support Center	Find help with how-to videos, FAQs, chat, user forums, Knowledgebase, and product notification updates.	rok.auto/support
Local Technical Support Phone Numbers	Locate the telephone number for your country.	rok.auto/phonesupport
Technical Documentation Center	Quickly access and download technical specifications, installation instructions, and user manuals.	rok.auto/techdocs
Literature Library	Find installation instructions, manuals, brochures, and technical data publications.	rok.auto/literature
Product Compatibility and Download Center (PCDC)	Download firmware, associated files (such as AOP, EDS, and DTM), and access product release notes.	rok.auto/pcdc

Documentation Feedback

Your comments help us serve your documentation needs better. If you have any suggestions on how to improve our content, complete the form at rok.auto/docfeedback.

Allen-Bradley, ArmorStratix, expanding human possibility, Rockwell Automation, Rockwell Software, and Stratix are trademarks of Rockwell Automation, Inc.
CIP, CIP Security, CIP Sync, and EtherNet/IP is a trademark of ODVA, Inc.
Trademarks not belonging to Rockwell Automation are property of their respective companies.

Rockwell Automation maintains current product environmental compliance information on its website at rok.auto/pec.

Rockwell Otomasyon Ticaret A.Ş. Kar Plaza İş Merkezi E Blok Kat:6 34752, İçerenköy, İstanbul, Tel: +90 (216) 5698400 EEE Yönetmeliğine Uygundur

Connect with us.

rockwellautomation.com — expanding **human possibility**®

AMERICAS: Rockwell Automation, 1201 South Second Street, Milwaukee, WI 53204-2496 USA, Tel: (1) 414.382.2000, Fax: (1) 414.382.4444
EUROPE/MIDDLE EAST/AFRICA: Rockwell Automation NV, Pegasus Park, De Kleetlaan 12a, 1831 Diegem, Belgium, Tel: (32) 2 663 0600, Fax: (32) 2 663 0640
ASIA PACIFIC: Rockwell Automation, Level 14, Core F, Cyberport 3, 100 Cyberport Road, Hong Kong, Tel: (852) 2887 4788, Fax: (852) 2508 1846
UNITED KINGDOM: Rockwell Automation Ltd. Pitfield, Kiln Farm Milton Keynes, MK11 3DR, United Kingdom, Tel: (44)(1908) 838-800, Fax: (44)(1908) 261-917

Publication 1783-TD002D-EN-P - May 2023
Supersedes Publication 1783-TD002C-EN-P - October 2022

Copyright © 2023 Rockwell Automation, Inc. All rights reserved. Printed in the U.S.A.