Installation Instruction

POINT I/O 120/240V ac Expansion Power Supply

Catalog Number 1734-EPAC

Contents

For	See Page
Important User Information	2
Before You Begin	4
Identify the Components	4
Install the ac Expansion Power Supply	6
Remove an ac Expansion Power Supply from the DIN Rail	6
Replace an ac Expansion Power Supply	7
Wire the ac Expansion Power Supply	8
North American Hazardous Location Approval	12
Specifications	13
Current Derating for DIN-Rail Mounting Orientation	16

Publication 1734-IN017A-EN-P - December 2005

Important User Information

Solid state equipment has operational characteristics differing from those of electromechanical equipment. Safety Guidelines for the Application, Installation and Maintenance of Solid State Controls (Publication SGI-1.1 available from your local Rockwell Automation sales office or online at http://www.literature.rockwellautomation.com) describes some important differences between solid state equipment and hard-wired electromechanical devices. Because of this difference, and also because of the wide variety of uses for solid state equipment, all persons responsible for applying this equipment must satisfy themselves that each intended application of this equipment is acceptable.

In no event will Rockwell Automation, Inc. be responsible or liable for indirect or consequential damages resulting from the use or application of this equipment.

The examples and diagrams in this manual are included solely for illustrative purposes. Because of the many variables and requirements associated with any particular installation, Rockwell Automation, Inc. cannot assume responsibility or liability for actual use based on the examples and diagrams.

No patent liability is assumed by Rockwell Automation, Inc. with respect to use of information, circuits, equipment, or software described in this manual.

Reproduction of the contents of this manual, in whole or in part, without written permission of Rockwell Automation, Inc., is prohibited.

Throughout this manual, when necessary, we use notes to make you aware of safety considerations.

WARNING	Identifies information about practices or circumstances that can cause an explosion in a hazardous environment, which may lead to personal injury or death, property damage, or economic loss.
IMPORTANT	Identifies information that is critical for successful application and understanding of the product.
ATTENTION	Identifies information about practices or circumstances that can lead to personal injury or death, property damage, or economic loss. Attentions help you: • identify a hazard • avoid a hazard • recognize the consequence
SHOCK HAZARD	Labels may be located on or inside the equipment (for example, drive or motor) to alert people that dangerous voltage may be present.
BURN HAZARD	Labels may be located on or inside the equipment (for example, drive or motor) to alert people that surfaces may be dangerous temperatures.

ATTENTION

Environment and Enclosure

This equipment is intended for use in a Pollution Degree 2 industrial environment, in overvoltage Category II applications (as defined in IEC publication 60664-1), at altitudes up to 2000 meters without derating.

This equipment is considered Group 1, Class A industrial equipment according to IEC/CISPR Publication 11. Without appropriate precautions, there may be potential difficulties ensuring electromagnetic compatibility in other environments due to conducted as well as radiated disturbance.

This equipment is supplied as open type equipment. It must be mounted within an enclosure that is suitably designed for those specific environmental conditions that will be present and appropriately designed to prevent personal injury resulting from accessibility to live parts. The interior of the enclosure must be accessible only by the use of a tool. Subsequent sections of this publication may contain additional information regarding specific enclosure type ratings that are required to comply with certain product safety certifications.

See NEMA Standards publication 250 and IEC publication 60529, as applicable, for explanations of the degrees of protection provided by different types of enclosure. Also, see the appropriate sections in this publication, as well as Industrial Automation Wiring and Grounding Guidelines, Allen-Bradley publication 1770-4.1, for additional installation requirements pertaining to this equipment.

ATTENTION

POINT I/O is grounded through the DIN rail to chassis ground. Use zinc plated, yellow-chromated steel DIN rail to assure proper grounding. Using other DIN rail materials (for example, aluminum or plastic) which can corrode, oxidize, or are poor conductors can result in improper or intermittent platform grounding.

ATTENTION

Preventing Electrostatic Discharge

This equipment is sensitive to electrostatic discharge, which can cause internal damage and affect normal operation. Follow these guidelines when you handle this equipment:

- Touch a grounded object to discharge potential static.
- Wear an approved grounding wriststrap.
- Do not touch connectors or pins on component boards.
- Do not touch circuit components inside the equipment.
- Use a static-safe workstation, if available.
- Store the equipment in appropriate static-safe packaging when not in use.

Before You Begin

Read this manual for information about how to install the 1734-EPAC POINT I/O 120/240V ac Expansion Power Supply.

Identify the Components

Use the figure to identify the external features of the ac expansion power supply.

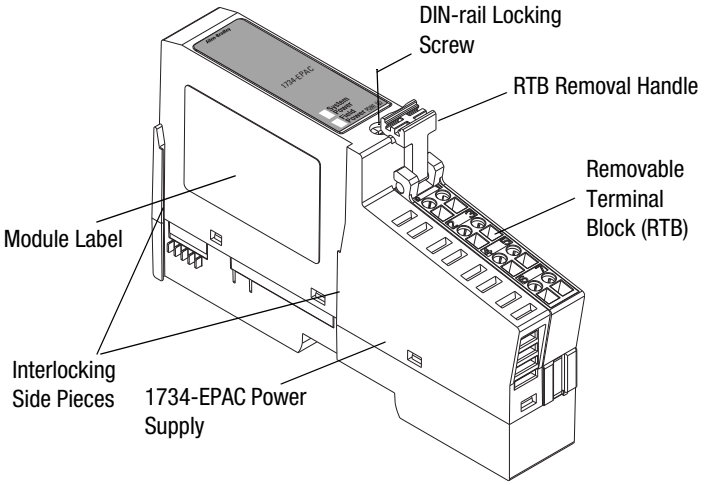

About the ac Expansion Power Supply

The 1734-EPAC ac expansion power supply passes 120/240V ac field power to the I/O modules to the right of it. This unit extends the backplane bus power for up to 17 I/O modules to the right of the supply, and creates a new field-voltage partition segment for driving field devices. The number of I/O modules supported by this power supply depend on the current required for each module and the DIN-rail mounting position. Do not exceed the current draw as shown in the specifications.

The ac expansion power supply also separates field power from I/O modules to the left of the unit, effectively providing functional and logical partitioning for:

- separating field power between input and output modules.
- grouping modules to perform a specific task or function.

You can use multiple ac expansion power supplies with POINT I/O adapters to assemble a full system. For instance, if you are using the 1734-ADN adapter, you may use an ac expansion power supply to add additional modules in 4 to 17 module increments. For example, if you had a 36 module system with a 1734 POINT I/O adapter, you would have two 1734-EPAC ac expansion power supplies to provide more PointBus current for modules to the right of the supply.

ATTENTION

You can only use the 1734-EPAC ac expansion power supplies with the 1734 POINT I/O adapters, such as the 1734-ADN, 1734-ADNX, 1734-APB, 1734-ACNR, and 1734-AENT adapters.
Do not use with the 1734-PDN module or with POINTBlock modules.

Install the ac Expansion Power Supply

To install the power supply on the DIN rail, proceed as follows.

1. Position the power supply vertically above the DIN rail.
2. Engage the interlocking side pieces with the unit on the left.
3. Press down firmly to install the power supply on the DIN rail.
   The locking mechanism will lock the power supply to the DIN rail.

Remove an ac Expansion Power Supply from the DIN Rail

1. To remove ac expansion power supply from the DIN rail, pull up on the RTB removal handle to remove the terminal block.

WARNING

When you insert or remove the power supply while backplane power is on, an electrical arc can occur. This could cause an explosion in hazardous location installations.
Be sure that power is removed or the area is nonhazardous before proceeding. Repeated electrical arcing causes excessive wear to contacts on both the power supply and its mating connector. Worn contacts may create electrical resistance that can affect power supply operation.

WARNING

When you connect or disconnect the removable terminal block (RTB) with field-side power applied, an electrical arc can occur. This could cause an explosion in hazardous location installations. Be sure that power is removed or the area is nonhazardous before proceeding.

2. Remove the module to the right of the power supply from its base unit.
3. Use a small-bladed screwdriver to rotate the DIN-rail locking screw to a vertical position.

   This releases the locking mechanism.

4. Lift straight up to remove.

Replace an ac Expansion Power Supply

1. Remove the module to the right of the ac expansion power supply from its base unit.
2. Position the ac expansion power supply vertically above the DIN rail.
3. Slide the power supply down allowing the interlocking side pieces to engage the adjacent modules (both left and right sides).
4. Press firmly to seat the power supply on the DIN rail.

   The power supply locking mechanism will snap into place.

5. Reinsert the module into the base to the right of the power supply.

Wire the ac Expansion Power Supply

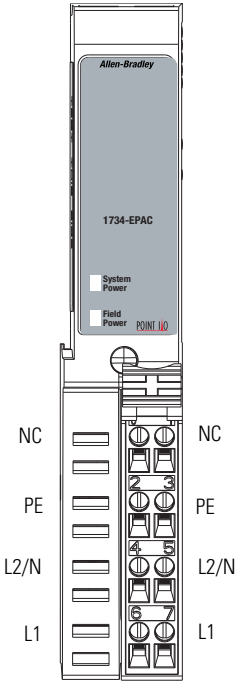

NC = No Connection
PE = Protective Earth Ground
L2/N = Neutral
L1 = 120/240V ac

1734EPACfrt

120/240V ac Wiring

WARNING

If you connect or disconnect wiring while field side power is on, an electrical arc can occur. This could cause an explosion in hazardous location installations.

Be sure that power is removed or the area is nonhazardous before proceeding.

Connect ground wire to PE terminal.

This ac supply will be connected to the internal

L1 = 120/240V ac,
L2/N = Neutral
PE = Protective Earth Ground

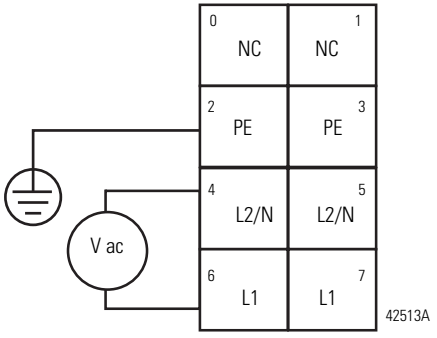

Connect	Terminal	Terminals (For Continuing Power)
L1 (120/240V ac)	6	7
L2/N (Neutral)	4	5
PE (Protective Earth Ground)	2	3

120/240V ac becomes the internal power bus for modules to the right.

ATTENTION

Use the 1734-EPAC ac expansion power supply only with Adapter Class products.

IMPORTANT

The 1734-EPAC ac expansion power supply can **only** be used with POINT I/O adapters.

Partitioning Examples

Functional

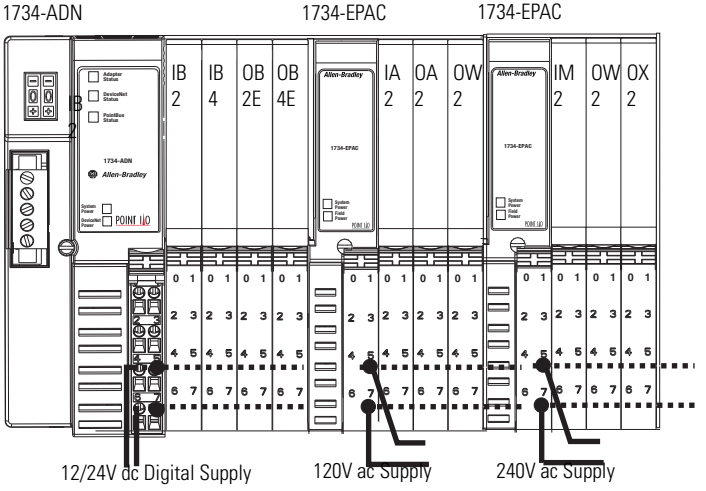

41970C

Logical

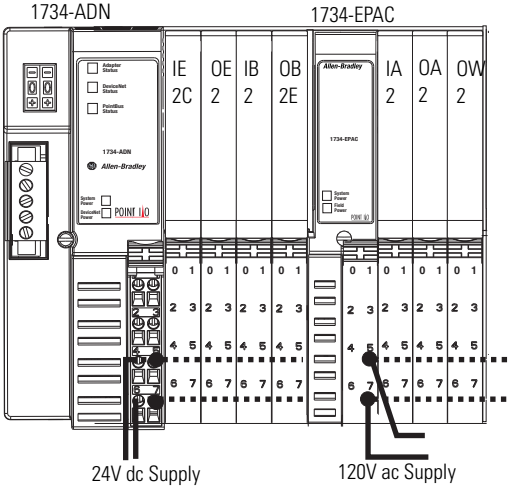

41970D

North American Hazardous Location Approval

The following information applies when operating this equipment in hazardous locations:	Informations sur l'utilisation de cet équipement en environnements dangereux:
Products marked CL I, DIV 2, GP A, B, C, D are suitable for use in Class I Division 2 Groups A, B, C, D, hazardous locations and nonhazardous locations only. Each product is supplied with markings on the rating nameplate indicating the hazardous location temperature code. When combining products within a system, the most adverse temperature code (lowest "T" number) may be used to help determine the overall temperature code of the system. Combinations of equipment in your system are subject to investigation by the local Authority Having Jurisdiction at the time of installation.	Les produits marqués CL I, DIV 2, GP A, B, C, D ne conviennent qu'à une utilisation en environnements de Classe I Division 2 Groupes A, B, C, D dangereux et non dangereux. Chaque produit est livré avec des marquages sur sa plaque d'identification qui indiquent le code de température pour les environnements dangereux. Lorsque plusieurs produits sont combinés dans un système, le code de température le plus défavorable (code de température le plus faible) peut être utilisé pour déterminer le code de température global du système. Les combinaisons d'équipements dans le système sont sujettes à inspection par les autorités locales qualifiées au moment de l'installation.

WARNING	**EXPLOSION HAZARD -** • Do not disconnect equipment unless power has been removed or the area is known to be nonhazardous. • Do not disconnect connections to this equipment unless power has been removed or the area is known to be nonhazardous. Secure any external connections that mate to this equipment by using screws, sliding latches, threaded connectors, or other means provided with this product. • Substitution of components may impair suitability for Class I, Division 2. • If this product contains batteries, they must only be changed in an area known to be nonhazardous.	**AVERTISSEMENT**	**RISQUE D'EXPLOSION –** • Couper le courant ou s'assurer que l'environnement est classé non dangereux avant de débrancher l'équipement. • Couper le courant ou s'assurer que l'environnement est classé non dangereux avant de débrancher les connecteurs. Fixer tous les connecteurs externes reliés à cet équipement à l'aide de vis, loquets coulissants, connecteurs filetés ou autres moyens fournis avec ce produit. • La substitution de composants peut rendre cet équipement inadapté à une utilisation en environnement de Classe 1, Division 2. • S'assurer que l'environnement est classé non dangereux avant de changer les piles.

Allen-Bradley, POINT I/O, and POINTBus are trademarks of Rockwell Automation, Inc. Trademarks not belonging to Rockwell Automation are property of their respective companies.

Specifications

Specifications - 120/240V ac Expansion Power Supply, Cat. No. 1734-EPAC	
I/O Module Capacity	12 modules typical (depending on current draw and orientation of modules; 4 to 17 based on module current requirements - total not to exceed 1.3 A) (for example, 5 modules at 0.220 A; 17 modules at 0.075 A) **Cat. No.** — **PointBus Current Requirements** 1734-IB2 — 75 mA 1734-IB4 — 75 mA 1734-IB8 — 75 mA 1734-IV2 — 75 mA 1734-IV4 — 75 mA 1734-OB2 — 75 mA 1734-OB4 — 75 mA 1734-OB8 — 75 mA 1734-OB2E — 75 mA 1734-OB2EP — 75 mA 1734-OB4E — 75 mA 1734-OB8E — 75 mA 1734-OV2E — 75 mA 1734-OV4E — 75 mA 1734-OW2 — 80 mA 1734-OX2 — 100 mA 1734-IE2C — 75 mA 1734-OE2C — 75 mA 1734-IE2V — 75 mA 1734-OE2V — 75 mA 1734-IA2 — 75 mA 1734-IM2 — 75 mA 1734-OA2 — 75 mA 1734-IJ2 — 160 mA 1734-IK2 — 160 mA 1734-IR2 — 220 mA 1734-IT2I — 175 mA 1734-SSI — 110 mA 1734-VHSC5 — 180 mA 1734-VHSC24 — 180 mA 1734-232ASC — 75 mA 1734-485ASC — 75 mA
Input Voltage Rating	120/240V ac nom, 50…60 Hz 85…264V ac range
Field Side Power Requirements	120V ac at 200 mA max 240V ac at 100 mA max
Inrush Current	2 A max for 6 ms
Indicators	1 green field power status indicator 1 green 5V system power indicator

POINTBus Output Current	Horizontal DIN rail mounting - 1.3 A at 5.2V dc Vertical DIN rail mounting - 1.0 A at 5.2V dc
Input Overvoltage Protection	MOV and fuse protected
Interruption	Output voltage will stay within specifications when input drops out for 10 ms at 85V ac with max load.
Module Location	Between I/O modules in 1734 system Breaks field power bus
Limitations	Use with POINT I/O adapters only
Power Consumption	15.1 W max @ 264V ac
Power Dissipation	8.4 W max @ 264V ac
Thermal Dissipation	28.7 BTU/hr max @ 264V ac
Isolation Voltage	264V continuous Tested to withstand 3250V dc for 60 s
Field Power Bus Supply Voltage Voltage Range Supply Current	 120…240V ac nom, 50…60 Hz 85…264V ac range 10 A max
Dimensions (HxWxL) Metric Imperial	76.2 x 25.4 x 133.4 mm 3.00 x 1.00 x 5.25 in.
Environmental Conditions	
Temperature, Operating	IEC 60068-2-1 (Test Ad, Operating Cold), IEC 60068-2-2 (Test Bd, Operating Dry Heat), IEC 60068-2-14 (Test Nb, Operating Thermal Shock): -20…55 °C (-4…131 °F)
Temperature, Storage	IEC 60068-2-1 (Test Ab, Unpackaged Nonoperating Cold), IEC 60068-2-2 (Test Bb, Unpackaged Nonoperating Dry Heat), IEC 60068-2-14 (Test Na, Unpackaged Nonoperating Thermal Shock): -40…85 °C (-40…185 °F)
Relative Humidity	IEC 60068-2-30 (Test Db, Unpackaged Nonoperating Damp Heat): 5…95% noncondensing
Shock Operating Nonoperating	IEC 60068-2-27 (Test Ea, Unpackaged Shock) 30 g 50 g
Vibration	IEC 60068-2-6, (Test Fc, Operating) 5 g @ 10…500 Hz

ESD Immunity	IEC 61000-4-2: 6 kV contact discharges 8 kV air discharges
Radiated RF Immunity	IEC 61000-4-3: 10V/m with 1 kHz sine-wave 80% AM from 30…2000 MHz 10V/m with 200 Hz 50% pulse 100% AM at 900 MHz 10V/m with 200 Hz 50% pulse 100% AM at 1890 MHz
EFT/B Immunity	IEC 61000-4-4: ±4 kV at 5 kHz on power ports
Surge Transient Immunity	IEC 61000-4-5: ±1 kV line-line (DM) and ±2 kV line-earth (CM) on power ports
Conducted RF Immunity	IEC 61000-4-6: 10V rms with 1 kHz sine-wave 80% AM from 150 kHz…80 MHz
Emissions	CISPR 11 Group 1, Class A
Enclosure Type Rating	None (open-style)
Voltage Variation	30% dips for 1 period at 0 ° & 180 ° on ac supply ports 60% dips for 5 and 50 periods on ac supply ports ±10% fluctuations for 15 minutes on ac supply ports >95% interruptions for 250 periods on ac supply ports
Conductors Wire Size Category	14…22 AWG (2.5…0.34 mm^2) - solid or stranded copper wire rated at 75 °C or greater 1.2 mm (3/64 inch) insulation maximum 1(1) on power ports
Terminal Base Screw Torque	0.8 Nm (7 lb-in)
Field Wiring Terminations	0 - No Connection 2 - Protective Earth Ground 4 - L2/N 6 - L1 1 - No Connection 3 - Protective Earth Ground 5 - L2/N 7 - L1
Weight Metric Imperial	182 g 6.40 oz

Certifications (When Product is Marked)[2]	**cULus**	UL Listed Industrial Control Equipment, certified for US and Canada
	cULus	UL Listed for Class I, Division 2, Groups A, B, C and D Hazardous locations, certified for US and Canada
	CE	European Union 89/336/EEC EMC Directive, compliant with: EN 50082-2; Industrial Immunity EN 61326; Meas./Control/Lab., Industrial Requirements EN 61000-6-2; Industrial Immunity EN 61000-6-4; Industrial Emissions
	C-Tick	Australian Radiocommunications Act compliant with AS/NZS CISPR 11, Industrial Emissions

1 Use this conductor category information for planning conductor routing as described in Industrial Automation Wiring and Grounding Guidelines, publication 1770-4.1.

2 See the Product Certification link at www.ab.com for Declaration of Conformity, Certificates, and other certification details.

Current Derating for DIN-Rail Mounting Orientation

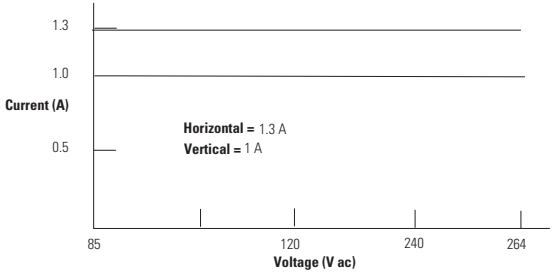

www.rockwellautomation.com

Power, Control and Information Solutions Headquarters

Americas: Rockwell Automation, 1201 South Second Street, Milwaukee, WI 53204-2496 USA, Tel: (1) 414.382.2000, Fax: (1) 414.382.4444
Europe/Middle East/Africa: Rockwell Automation, Vorstlaan/Boulevard du Souverain 36, 1170 Brussels, Belgium, Tel: (32) 2 663 0600, Fax: (32) 2 663 0640
Asia Pacific: Rockwell Automation, Level 14, Core F, Cyberport 3, 100 Cyberport Road, Hong Kong, Tel: (852) 2887 4788, Fax: (852) 2508 1846

Publication 1734-IN017A-EN-P - December 2005 PN 957782-81

Copyright © 2005 Rockwell Automation, Inc. All rights reserved. Printed in Singapore.