GLEDBB INSTALLATION INSTRUCTIONS

Thank you for buying RAB lighting fixtures. Our goal is to design the best quality products to get the job done right. We'd like to hear your comments. Call the Marketing Department at 888-RAB-1000 or email: marketing@rabweb.com

IMPORTANT

READ CAREFULLY BEFORE INSTALLING FIXTURE. RETAIN THESE INSTRUCTIONS FOR FUTURE REFERENCE.
Fixtures must be wired in accordance with the National Electrical Code and all applicable local codes. Proper grounding is required for safety. THIS PRODUCT MUST BE INSTALLED IN ACCORDANCE WITH THE APPLICABLE INSTALLATION CODE BY A PERSON FAMILIAR WITH THE CONSTRUCTION AND OPERATION OF THE PRODUCT AND THE HAZARDS INVOLVED.
WARNING: Make certain power is OFF before installing or maintaining fixture. No user serviceable parts inside.
CAUTION: Use weatherproof silicone sealant between the ceiling plate and mounting surface.

INSTALLATION

Mount the **Garage GLED/ CLED** and the **Junction Box GLEDBB** as follows:

1. Open the **Junction Box GLEDBB** by loosening the **Screw**.
2. Mount the **Junction Box GLEDBB** on the ceiling using appropriate hardware suitable for the application.
3. Use weatherproof silicone sealant between the Junction Box GLEDBB and mounting surface and conduit entries on the Junction Box GLEDBB.
4. Slide the **Hook** of the **Junction box** in the housing and secure the **Housing** onto the **Junction Box GLEDBB.** For hands free wiring, hang the **Housing** by the **Hook**.
5. Feed the supply wire through the conduit or ceiling. Follow wiring directions on fixture installation instruction sheet to complete electrical splices.
6. Close the **Junction Box GLEDBB** and tighten the **Screw**.

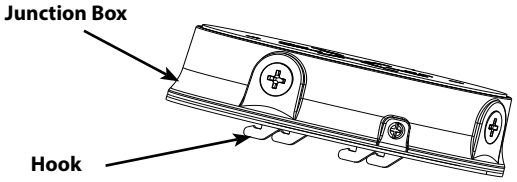

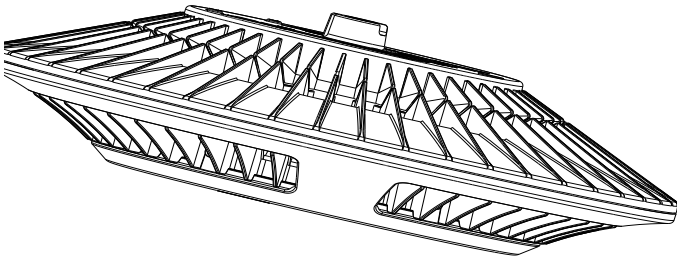

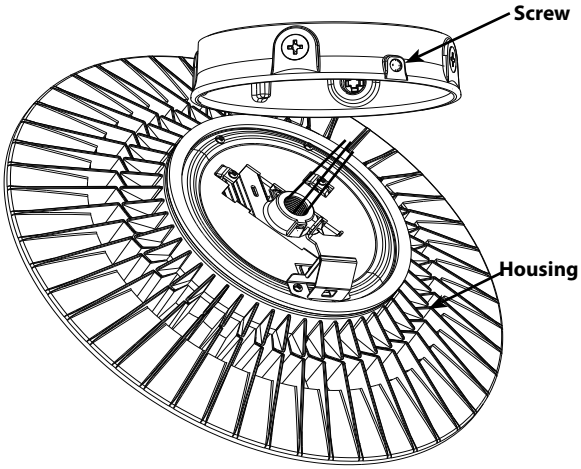

Note: These instructions do not cover all details or variations in equipment nor do they provide for every possible situation during installation, operation or maintenance.

©2013 RAB LIGHTING Inc.
Northvale, New Jersey 07647 USA
GLEDBB IN 0913

Easy Installation & Product Help

Tech Help Line
Call our experts 888 RAB-1000

rabweb.com
Visit our website for product info

email
Answered promptly sales@rabweb.com

GPLEDBB INSTALLATION INSTRUCTIONS

Thank you for buying RAB lighting fixtures. Our goal is to design the best quality products to get the job done right. We'd like to hear your comments. Call the Marketing Department at 888-RAB-1000 or email: marketing@rabweb.com

IMPORTANT

READ CAREFULLY BEFORE INSTALLING FIXTURE. RETAIN THESE INSTRUCTIONS FOR FUTURE REFERENCE.
Fixtures must be wired in accordance with the National Electrical Code and all applicable local codes. Proper grounding is required for safety. THIS PRODUCT MUST BE INSTALLED IN ACCORDANCE WITH THE APPLICABLE INSTALLATION CODE BY A PERSON FAMILIAR WITH THE CONSTRUCTION AND OPERATION OF THE PRODUCT AND THE HAZARDS INVOLVED.
WARNING: Make certain power is OFF before installing or maintaining fixture. No user serviceable parts inside.
CAUTION: Use weatherproof silicone sealant between the ceiling plate and mounting surface.

INSTALLATION

Choose pendant length and mount the **Garage GPLED/ PLED** and the **Junction Box GPLEDBB** as follows:

1. Open the **Junction Box GPLEDBB** by loosening the screw.
2. Mount the **Junction Box GPLEDBB** on the ceiling using appropriate hardware suitable for the application.
3. Use weatherproof silicone sealant between the **Junction Box GPLEDBB** and mounting surface and conduit entries on the **Junction Box GPLEDBB.**
4. The **Garage GPLED/ PLED** is supplied with 48" leads. Feed wires through the **Pendant.** Wrap teflon tape and silicone sealant onto the threads of the **Pendant.**
5. Tighten set screw. Feed wires through **Junction Box Plate.** Tighten the **Pendant** with **Set Screw**.
6. Allow the **Junction Box Plate** to hang by the **Hook**.
7. Feed the supply wire through the conduit or ceiling. Follow wiring directions on fixture installation instruction sheet to complete electrical splices.
8. Close the **Junction Box GPLEDBB** and tighten the screw.

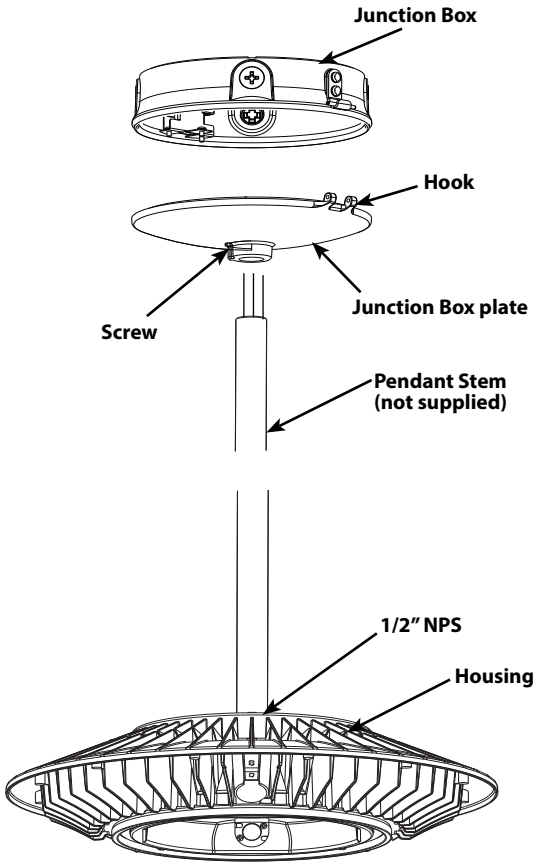

Note: These instructions do not cover all details or variations in equipment nor do they provide for every possible situation during installation, operation or maintenance.

Easy Installation & Product Help

Tech Help Line
Call our experts 888 RAB-1000

rabweb.com
Visit our website for product info

email
Answered promptly sales@rabweb.com

©2013 RAB LIGHTING Inc.
Northvale, New Jersey 07647 USA
GPLEDBB IN 0913