INSTRUCTIONS

A17™ XFU FIELD-ADJUSTABLE AREA LIGHT INSTALLATION

RAB Lighting is committed to creating high-quality, affordable, well-designed and energy-efficient LED lighting and controls that make it easy for electricians to install and end users to save energy. We'd love to hear your comments. Please call the Marketing Department at 888-RAB-1000 or email: marketing@rablighting.com

150/120/100W

300/240/200W

IMPORTANT

READ CAREFULLY BEFORE INSTALLING FIXTURE. RETAIN THESE INSTRUCTIONS FOR FUTURE REFERENCE.
RAB fixtures must be wired in accordance with the National Electrical Code and all applicable local codes. Proper grounding is required for safety. THIS PRODUCT MUST BE INSTALLED IN ACCORDANCE WITH THE APPLICABLE INSTALLATION CODE BY A PERSON FAMILIAR WITH THE CONSTRUCTION AND OPERATION OF THE PRODUCT AND THE HAZARDS INVOLVED.

WARNING: Make certain power is OFF before installing or maintaining fixture. No user serviceable parts inside.

WARNING: Do not use an electric generator to test LED fixtures.

WARNING: Min 75 °C SUPPLY CONDUCTORS.

MOUNTING THE UNIVERSAL ADJUSTABLE POLE ARM TO THE FIXTURE

Notice: Adjustable angle is 0-35°

1. Install the **Universal Pole Arm** onto pre-installed **Bracket** on fixture and secure with **Arm Adjustment Bolt** as shown in Fig. 1.

Square Pole Mount

1. Place the **Bolster Plate** inside the **Pole** as shown in Fig. 2.
2. Fix **Universal Pole Arm** to **Square Pole** with **Mounting Bolts** *(Fig. 2)*.
3. With **Arm Cover** open pull the wires from the **Pole** into the **Universal Pole Arm** and make appropriate wire connections per NEC *(Fig. 6)*.
4 To change fixture angle, loosen **Arm Adjustment Bolt** *(Fig. 1)*, adjust fixture to desired angle and tighten accordingly.

Round Pole Mount

1. Remove **Curved Gasket** *(Fig. 3)*.
2. Place the **Bolster Plate** inside the **Pole** as shown in Fig. 3.
3. Fix **Universal Pole Arm** to **Round Pole** with **Mounting Bolts** *(Fig. 3)*.
4. With **Arm Cover** open pull the wires from the **Pole** into the **Universal Pole Arm** and make appropriate wire connections per NEC *(Fig. 6)*.
5. To change fixture angle, loosen **Arm Adjustment Bolt** *(Fig. 1)*, adjust fixture to desired angle and tighten accordingly.

FIG. 1

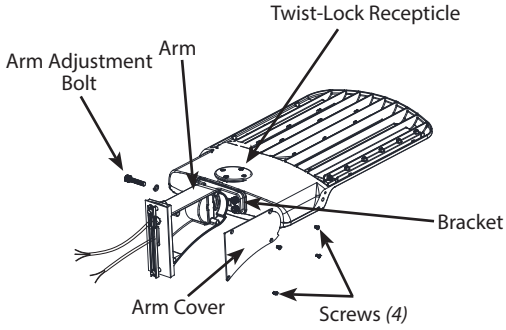

FIG. 2

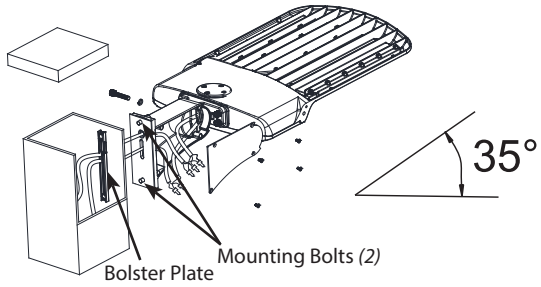

FIG. 3

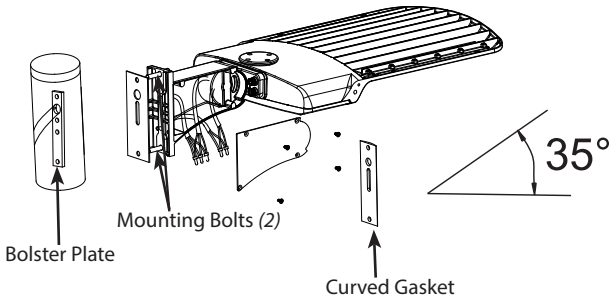

INSTRUCTIONS

A17™ XFU FIELD-ADJUSTABLE AREA LIGHT INSTALLATION

RAB Lighting is committed to creating high-quality, affordable, well-designed and energy-efficient LED lighting and controls that make it easy for electricians to install and end users to save energy. We'd love to hear your comments. Please call the Marketing Department at 888-RAB-1000 or email: marketing@rablighting.com

FIELD ADJUSTMENT

Install **Photocell** *(provided)* or **Shorting Cap** *(provided)* as needed.

Follow instructions below to change fixture **Color Temperature** *(CCT)* and/or **Power** *(Wattage)* from the factory settings.
WARNING: Do not open or remove Respirator Plug.

Factory Settings:
A17XFU150 4000K *(CCT)*, 150W *(Power)*
A17XFU300 4000K *(CCT)*, 300W *(Power)*

1. Unscrew **3/4" Plug** as shown in Fig. 4.
2. Adjust **Color Temperature** *(CCT)* and/or **Power** *(W)* by sliding the respective switch to the desired value as shown in Fig. 5.
3. Re-install **3/4" Plug** and tighten..

FIG. 4

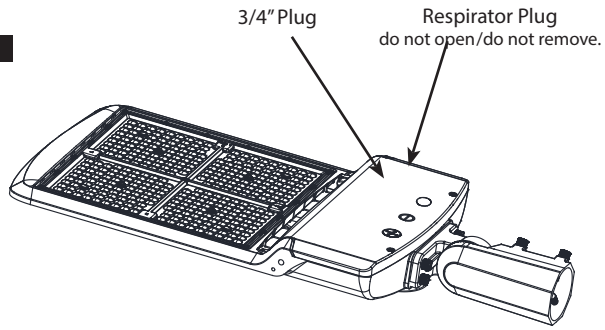

FIG. 5

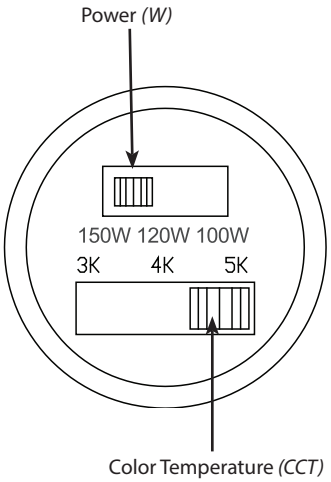

MVS MODELS

(optional remote sold separately for custom settings, CAT# MSR1).

Factory Settings:

- Brightness: 100%
- Hold Time: 20 Minutes
- Daylight: Disabled
- Sensitivity: 100%
- Stand-by dimming level: 20%
- Stand-by time: 1 Minute

0-10V DIMMABLE WIRING

Universal voltage driver permits operation at 120V through 277V, 50 or 60 Hz. For 0-10 dimming, follow the wiring directions as shown in Fig. 6.

1. Connect the black/brown fixture lead to the LINE supply lead.
2. Connect the white/blue fixture lead to the COMMON supply lead.
3. Connect the green/yellow wire from fixture to supply ground. Do NOT connect the GROUND of the dimming fixture to the output.
4. Connect the purple fixture lead to the DIM V+ lead.
5. Connect the pink fixture lead to the DIM V- lead.
6. Cap the yellow fixture lead, if present. Do NOT connect.

FIG. 6

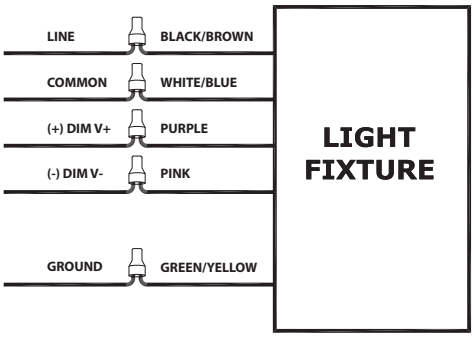

INSTRUCTIONS

A17™ XFU FIELD-ADJUSTABLE AREA LIGHT INSTALLATION

RAB Lighting is committed to creating high-quality, affordable, well-designed and energy-efficient LED lighting and controls that make it easy for electricians to install and end users to save energy. We'd love to hear your comments. Please call the Marketing Department at 888-RAB-1000 or email: marketing@rablighting.com

CLEANING & MAINTENANCE

CAUTION: Be sure fixture temperature is cool enough to touch. Do not clean or maintain while fixture is energized.

1. Clean Polycarbonate lens with non-abrasive glass cleaning solution.
2. Do not open the fixture to clean the LED. Do not touch the LED.

TROUBLESHOOTING

1. Check that the line voltage at the fixture is correct. Refer to wiring directions.
2. Is the fixture grounded properly?
3. Is the photocell, if used, functioning properly?

Note: *These instructions do not cover all details or variations in equipment nor do they provide for every possible situation during installation,*

© 2024 RAB LIGHTING Inc.

Easy Answers

rablighting.com
Visit our website for product info

Tech Help Line
Call our experts: 888 722-1000

e-mail
Answered promptly - sales@rablighting.com

Free Lighting Layouts
Answered online or by request

A17 XFU - IN-0524
73711-RAB

RAB WARRANTY: *RAB's warranty is subject to all terms and conditions found at rablighting.com/warranty*