KNOOK™ UNDERCABINET
JBKNOOK INSTALLATION INSTRUCTIONS

Thank you for buying RAB lighting fixtures. Our goal is to design the best quality products to get the job done right. We'd like to hear your comments. Call the Marketing Department at 888-RAB-1000 or email: marketing@rabweb.com

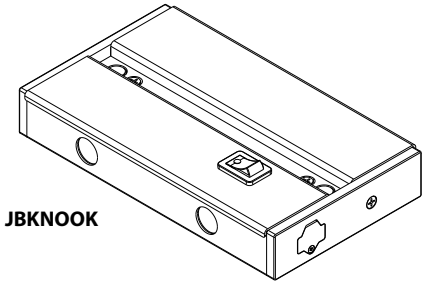

IMPORTANT

READ CAREFULLY BEFORE INSTALLING FIXTURE. RETAIN THESE INSTRUCTIONS FOR FUTURE REFERENCE.

Fixtures must be wired in accordance with the National Electrical Code and all applicable local codes. Proper grounding is required for safety. THIS PRODUCT MUST BE INSTALLED IN ACCORDANCE WITH THE APPLICABLE INSTALLATION CODE BY A PERSON FAMILIAR WITH THE CONSTRUCTION AND OPERATION OF THE PRODUCT AND THE HAZARDS INVOLVED.

SAFETY INSTRUCTIONS

WARNING: Make certain power is OFF before installing or maintaining fixture. No user serviceable parts inside.

WARNING: Risk of fire or electric shock. SUITABLE FOR INDOOR DRY LOCATIONS ONLY.

WARNING: To prevent overheating do not install in small enclosed spaces.

WARNING: Do not install this product in an environment outside the listed ambient temperature (-20°C to +40°C).

WARNING: 300W maximum linear run, do not use this Junction Box to provide power to other products.

MOUNTING INSTRUCTIONS

The fixture is suitable for indoor dry locations only.

1. Remove **Junction Box Cover Screws** (2) and remove **Cover**. Save **Screws** and **Lockwashers**.
2. Prepare electrical wire(s) (supplied by others) by stripping conductor ends approximately 3/8".
3. For installation using **3/8" Wire Connector** (supplied) determine mounting orientation and remove one **KNOCKOUT** on desired side of **Junction Box** for electrical supply and attach **3/8" Wire Connector** to **Junction Box** as shown. Outer wire jacket must protude through **3/8" Wire Connector** to adequately protect internal conductors**.**
4. Secure **3/8" Wire Connector** to **Junction Box** by tightening the **Locknut** then tightening **Clamping Crews**(2) on electrical connector fitting securely.
5. Push stripped wire(s) ends into PUSH-IN WIRE CONNECTORS (see WIRING DIAGRAM). Push excess electrical supply wire(s) back into wall.
6. Secure **Junction Box** to mounting surface using (2) **Captive Screws** (supplied), be careful not to drive screws all the way through the cabinet bottom. Use shorter screws if neccessary (supplied by others).
7. Replace and secure **Junction Box Cover** with supplied screws. Make certain **Lockwashers** are located beneath screw heads to properly ground cover.
8. Follow installation instructions provided with undercabinet light fixture for mounting and connector options.
9. Before powering on make sure that all fixtures connected to **Junction Box** have been properly installed and that all open **Electrical Ports** on the **Junction Box** and fixtures are safely covered with Electrical Port Covers.

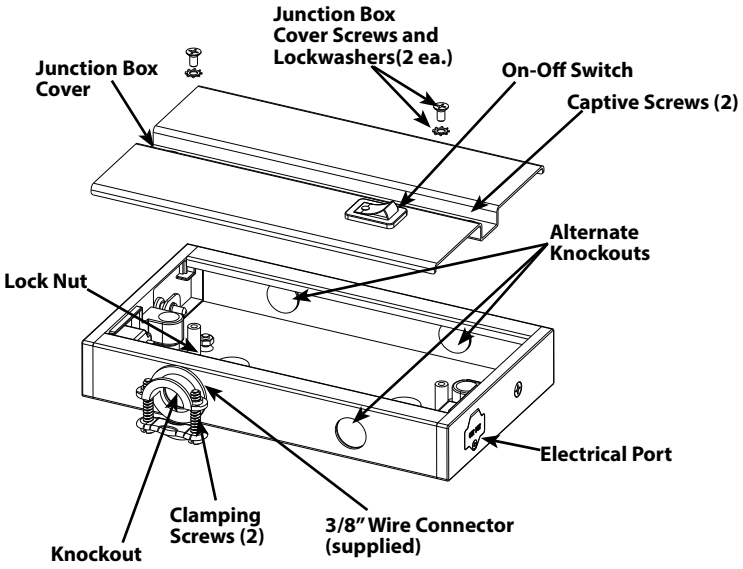

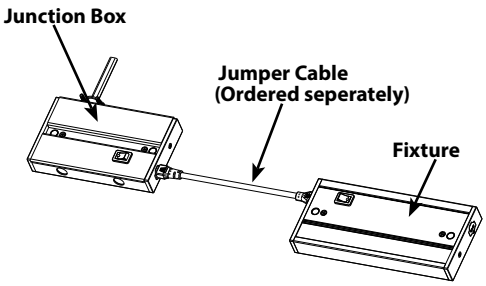

KNOOK™ UNDERCABINET
JBKNOOK INSTALLATION INSTRUCTIONS

Thank you for buying RAB lighting fixtures. Our goal is to design the best quality products to get the job done right. We'd like to hear your comments. Call the Marketing Department at 888-RAB-1000 or email: marketing@rabweb.com

ON-OFF WIRING

Make sure the supply voltage is the same as the luminaire voltage, see fixture spec label.

1. Connect the black fixture lead to the LINE supply lead.
2. Connect the white fixture lead to the COMMON supply lead.
3. Connect the GROUND wire from fixture to supply ground.

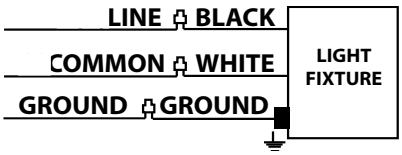

CLEANING & MAINTENANCE

CAUTION: Be sure fixture temperature is cool enough to touch. Do not clean or maintain while fixture is energized.

1. Clean polycarbonate lens with non-abrasive glass cleaning solution.
2. Do not open fixture to clean the LED. Do not touch the LED.

TROUBLESHOOTING

1. Check that the line voltage at fixture is correct. Refer to wiring directions.
2. Is the fixture grounded properly?

Note: These instructions do not cover all details or variations in equipment nor do they provide for every possible situation during installation operation or maintenance.

©2016 RAB LIGHTING Inc.
Northvale, New Jersey 07647 USA

JBKNOOK IN-0816

Easy Installation & Product Help

Tech Help Line
Call our experts 888 RAB-1000

rabweb.com
Visit our website for product info

email
Answered promptly sales@rabweb.com

KNOOK™ UNDERCABINET INSTALLATION INSTRUCTIONS

Thank you for buying RAB lighting fixtures. Our goal is to design the best quality products to get the job done right. We'd like to hear your comments. Call the Marketing Department at 888-RAB-1000 or email: marketing@rabweb.com

KNOOK 8"

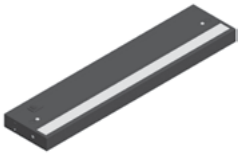

KNOOK 16"

KNOOK 24"

KNOOK 32"

IMPORTANT

READ CAREFULLY BEFORE INSTALLING FIXTURE. RETAIN THESE INSTRUCTIONS FOR FUTURE REFERENCE.

Fixtures must be wired in accordance with the National Electrical Code and all applicable local codes. Proper grounding is required for safety. THIS PRODUCT MUST BE INSTALLED IN ACCORDANCE WITH THE APPLICABLE INSTALLATION CODE BY A PERSON FAMILIAR WITH THE CONSTRUCTION AND OPERATION OF THE PRODUCT AND THE HAZARDS INVOLVED.

WARNING: Make certain power is OFF before installing or maintaining fixture. No user serviceable parts inside.

SAFETY INSTRUCTIONS

WARNING: Risk of fire or electric shock. SUITABLE FOR INDOOR DRY LOCATIONS ONLY.
WARNING: To prevent overheating do not install in small enclosed spaces.
WARNING: Do not install this product in an environment outside the listed ambient temperature (-20° to +40°C).
WARNING: 300W maximum linear run.

MOUNTING INSTRUCTIONS

The fixture is suitable for indoor dry locations only.

1. Determine location to install fixture(s).
   WARNING: To prevent wiring damage or abrasion, do not expose wiring to edges of sharp objects.
2. Access wiring compartments using option A or B:

   A) Rear access door knockout (Fig. 1).

   Remove **Knockout** by using a punch tool (not supplied). Loosen **Rear Access Door Screw** and remove door.

   B) Alternate Knockouts for 24" or 32" only(Fig. 2 and 3).

   Alternate Knockouts are located along back and top of housing. Remove **Wiring Compartment Cover**.
3. To access internal wiring remove **Wiring Compartment Cover** (Fig.3).Feed wires through **3/8" Wire Connector** (supplied) and install connector to **Rear Access Door.** Wire cable to push in connectors. Secure **Rear Access Door** to fixture (Fig. 4).
4. Secure fixture to mounting surface using (2) flat head wood screws (supplied), be careful not to drive screws all the way through the cabinet bottom. Use shorter screws if neccessary (supplied by others). Once the fixture is secure to surface insert **Screw Hole Covers** (supplied).

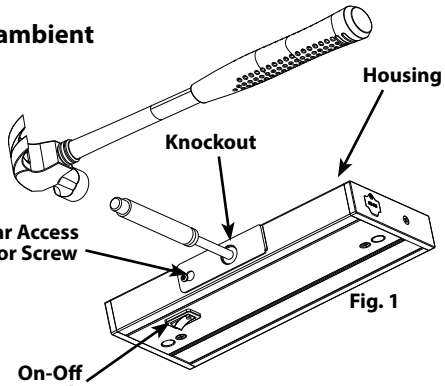

Fig. 1

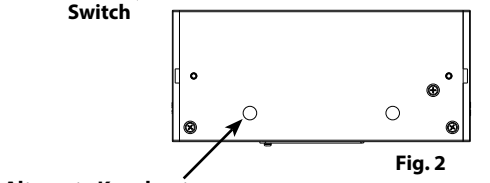

Fig. 2

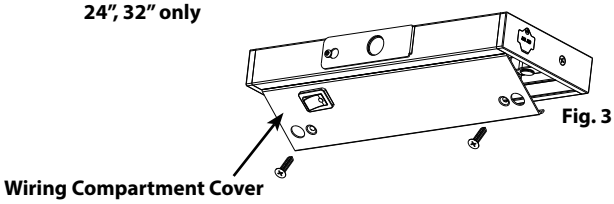

Fig. 3

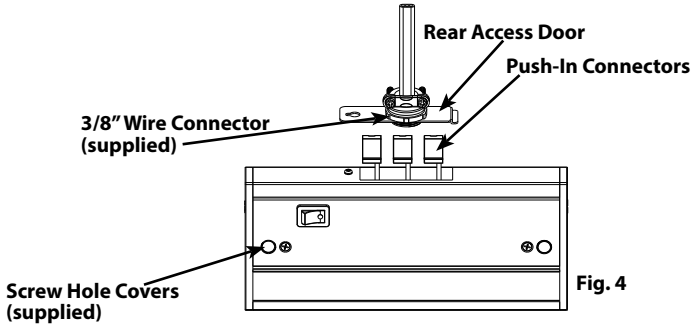

Fig. 4

KNOOK™ UNDERCABINET INSTALLATION INSTRUCTIONS

Thank you for buying RAB lighting fixtures. Our goal is to design the best quality products to get the job done right. We'd like to hear your comments. Call the Marketing Department at 888-RAB-1000 or email: marketing@rabweb.com

INTERCONNECTING FIXTURES

Use **In-Line Connector** supplied with each fixture to connect fixtures directly to each other end-to end.

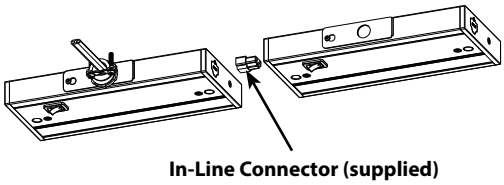

ACCESSORIES - KJC6, KJC12 KJC24, KJC72 (ordered separately)

Use 6", 12", 24", 72" flexible Jumper Cables (ordered separately)

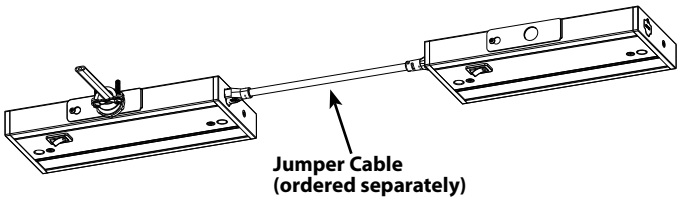

ACCESSORIES - KPCJ

(ordered separately)

Use 6FT flexible Cord and Plug (ordered separately) to power fixture.

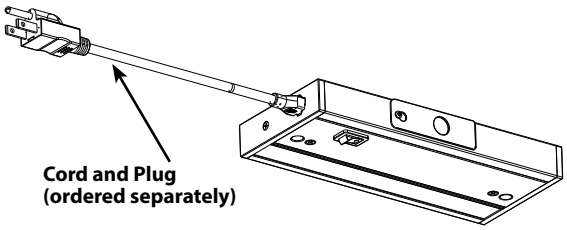

ACCESSORIES - KPCJ

(ordered separately)

Use 6FT flexible Power Feed Cord (ordered separately) to connect fixture to Junction Box (supplied by others).

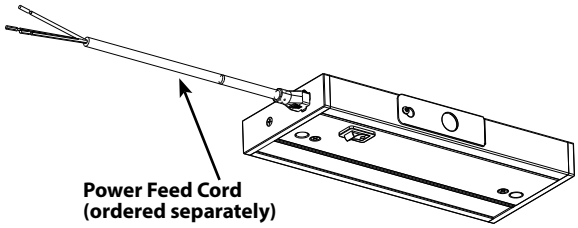

ACCESSORIES - JBKNOOK

(ordered separately)

Use Junction Box (ordered separately) to split electrical connections between two fixtures.

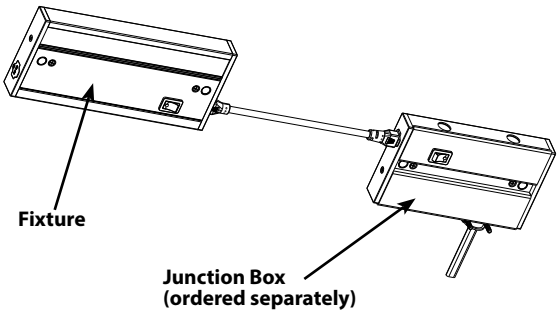

ACCESSORIES - OCSKNOOK

(ordered separately)

Use Junction Box with Motion Sensor (ordered separately) for automatic on/off control.

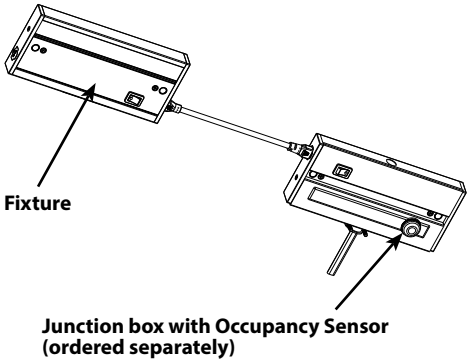

KNOOK™ UNDERCABINET INSTALLATION INSTRUCTIONS

Thank you for buying RAB lighting fixtures. Our goal is to design the best quality products to get the job done right. We'd like to hear your comments. Call the Marketing Department at 888-RAB-1000 or email: marketing@rabweb.com

ON-OFF WIRING

Make sure the supply voltage is the same as the luminaire voltage, see fixture spec label. Diming compatible with most incandescent dimmers.

1. Connect the black fixture lead to the LINE supply lead.
2. Connect the white fixture lead to the COMMON supply lead.
3. Connect the GROUND wire from fixture to supply ground.

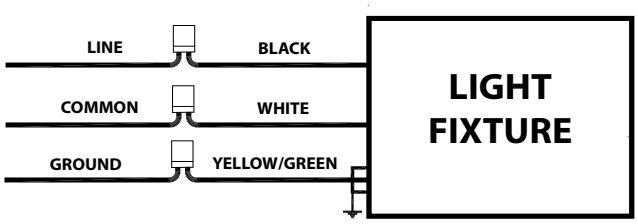

COMPATIBLE DIMMERS

This partial list contains a representative selection of known compatible dimming controls.

- DIVA DV-603P
- SKYLARK S-600P
- SKYLARK SELV-300P
- SKYLARK CTCL-153P
- DECORA IPL06-10Z
- DECORA 6631-P
- COOPER-TAL06P-C1
- LUTRON-RRD-8ANS-WH
- LUTRON-RRD-6NA-WH
- LEVITON 35A00-1

CLEANING & MAINTENANCE

CAUTION: Be sure fixture temperature is cool enough to touch. Do not clean or maintain while fixture is energized.

1. Clean polycarbonate lens with non-abrasive glass cleaning solution.
2. Do not open fixture to clean the LED. Do not touch the LED.

TROUBLESHOOTING

1. Check that the line voltage at fixture is correct. Refer to wiring directions.
2. Is the fixture grounded properly?

Note: These instructions do not cover all details or variations in equipment nor do they provide for every possible situation during installation operation or maintenance.

©2016 RAB LIGHTING Inc.
Northvale, New Jersey 07647 USA

KNOOK IN-0816

Easy Installation & Product Help

Tech Help Line
Call our experts 888 RAB-1000

rabweb.com
Visit our website for product info

email
Answered promptly sales@rabweb.com

KNOOK™ UNDERCABINET
OCSKNOOK INSTALLATION INSTRUCTIONS

Thank you for buying RAB lighting fixtures. Our goal is to design the best quality products to get the job done right. We'd like to hear your comments. Call the Marketing Department at 888-RAB-1000 or email: marketing@rabweb.com

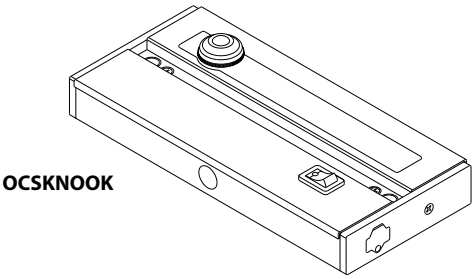

IMPORTANT

READ CAREFULLY BEFORE INSTALLING FIXTURE. RETAIN THESE INSTRUCTIONS FOR FUTURE REFERENCE.

Fixtures must be wired in accordance with the National Electrical Code and all applicable local codes. Proper grounding is required for safety. THIS PRODUCT MUST BE INSTALLED IN ACCORDANCE WITH THE APPLICABLE INSTALLATION CODE BY A PERSON FAMILIAR WITH THE CONSTRUCTION AND OPERATION OF THE PRODUCT AND THE HAZARDS INVOLVED.

SAFETY INSTRUCTIONS

WARNING: Make certain power is OFF before installing or maintaining fixture. No user serviceable parts inside.
WARNING: Risk of fire or electric shock. SUITABLE FOR INDOOR DRY LOCATIONS ONLY.
WARNING: To prevent overheating do not install in small enclosed spaces.
WARNING: Do not install this product in an environment outside the listed ambient temperature(-20°C to +40°C).
WARNING: 300W maximum linear run, do not use this Junction Box to provide power to other products.

OCCUPANCY SENSOR

SPECIFICATIONS

Input Voltage: 120V

Operational Frequency: 50/60Hz

Time Delay: 30 seconds, 10 min, 20 min, 30 min

Operating Temperature: 0°C to 55°C (32°F to 131°F)

Mounting Height: reduced sensitivity, 8ft
optimal sensitivity, 6ft

Coverage Diameter: 10ft at 8ft mounting height

COVERAGE DIAGRAM

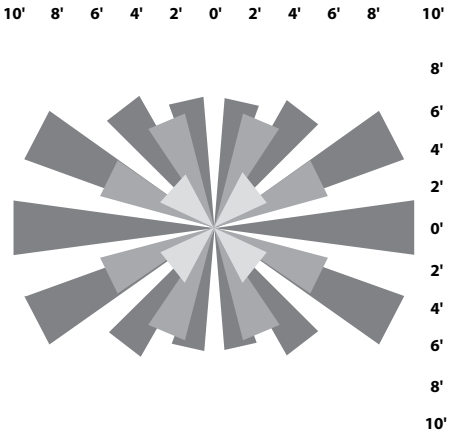

OPERATION

- Uses passive infrared technology to detect motion
- Heat from occupants of room triggers sensor into Auto-on
- Lack of detection triggers Time Delay
  - If Time Delay period elapses with no detected motion, fixture will turn off
  - Motion detection during Time Delay period stops Time Delay and fixture remains on
- Movement must occur across zones of detection (see coverage diagram below

SETTING TIME DELAY

- Turn dial to desired Time Delay period
- Dial is located on sensor surface

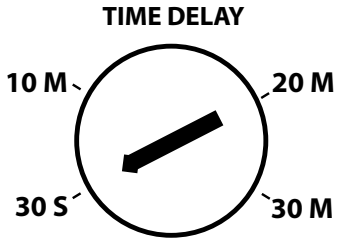

KNOOK™ UNDERCABINET
OCSKNOOK INSTALLATION INSTRUCTIONS

Thank you for buying RAB lighting fixtures. Our goal is to design the best quality products to get the job done right. We'd like to hear your comments. Call the Marketing Department at 888-RAB-1000 or email: marketing@rabweb.com

MOUNTING INSTRUCTIONS

The fixture is suitable for indoor dry locations only.

1. Remove **Junction Box Cover Screws** (2) and remove **Cover**. Save **Screws** and **Lockwashers**.
2. Prepare electrical wire(s) (supplied by others) by stripping conductor ends approximately 3/8".
3. For installation using **3/8" Wire Connector** (supplied) determine mounting orientation and remove one **KNOCKOUT** on desired side of **Junction Box** for electrical supply and attach **3/8" Wire Connector** to **Junction Box** as shown. Outer wire jacket must protude through **3/8" Wire Connector** to adequately protect internal conductors**.**
4. Secure **3/8" Wire Connector** to **Junction Box** by tightening the **Locknut** then tightening **Clamping Crews**(2) on electrical connector fitting securely.
5. Push stripped wire(s) ends into PUSH-IN WIRE CONNECTORS (see WIRING DIAGRAM). Push excess electrical supply wire(s) back into wall.
6. Secure **Junction Box** to mounting surface using (2) **Captive Screws** (supplied), be careful not to drive screws all the way through the cabinet bottom. Use shorter screws if neccessary (supplied by others).
7. Replace and secure **Junction Box Cover** with supplied screws. Make certain **Lockwashers** are located beneath screw heads to properly ground cover.
8. Follow installation instructions provided with undercabinet light fixture for mounting and connector options.
9. Before powering on make sure that all fixtures connected to J**unction Box** have been properly installed and that all open **Electrical Ports** on the **Junction Box** and fixtures are safely covered with Electrical Port Covers.

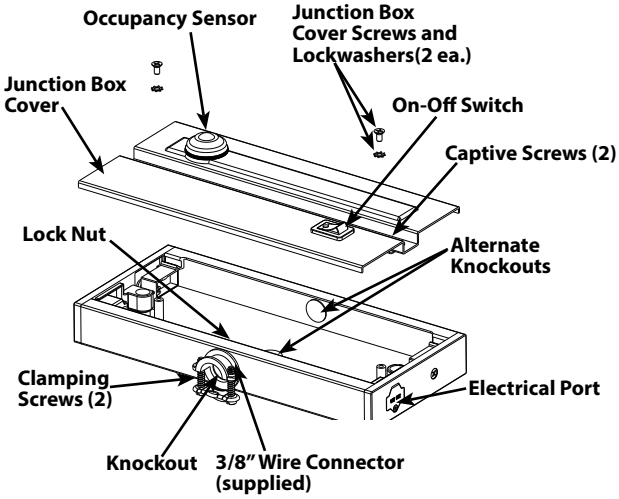

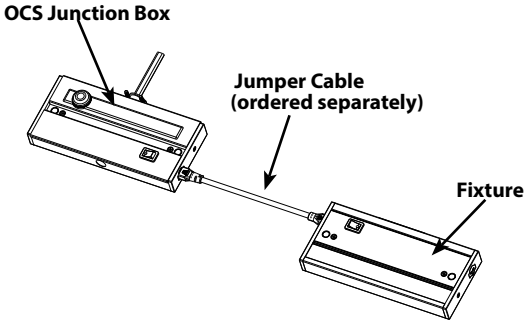

TROUBLESHOOTING

1. Check that the line voltage at fixture is correct. Refer to wiring directions.
2. Is the fixture grounded properly?

CLEANING & MAINTENANCE

CAUTION: Be sure fixture temperature is cool enough to touch. Do not clean or maintain while fixture is energized.

1. Clean polycarbonate lens with non-abrasive glass cleaning solution.
2. Do not open fixture to clean the LED. Do not touch the LED.

Note: These instructions do not cover all details or variations in equipment nor do they provide for every possible situation during installation operation or maintenance.

©2016 RAB LIGHTING Inc.
Northvale, New Jersey 07647 USA

OCSKNOOK IN-0916

Easy Installation & Product Help

Tech Help Line
Call our experts 888 RAB-1000

rabweb.com
Visit our website for product info

email
Answered promptly sales@rabweb.com

KNOOK™ UNDERCABINET
OCSKNOOK INSTALLATION INSTRUCTIONS

Thank you for buying RAB lighting fixtures. Our goal is to design the best quality products to get the job done right. We'd like to hear your comments. Call the Marketing Department at 888-RAB-1000 or email: marketing@rabweb.com

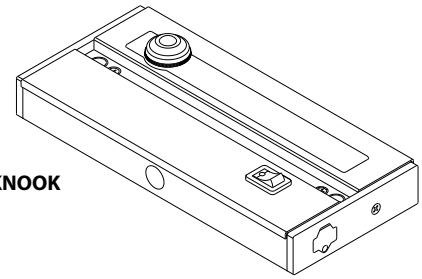

OCSKNOOK

IMPORTANT

READ CAREFULLY BEFORE INSTALLING FIXTURE. RETAIN THESE INSTRUCTIONS FOR FUTURE REFERENCE.

Fixtures must be wired in accordance with the National Electrical Code and all applicable local codes. Proper grounding is required for safety. THIS PRODUCT MUST BE INSTALLED IN ACCORDANCE WITH THE APPLICABLE INSTALLATION CODE BY A PERSON FAMILIAR WITH THE CONSTRUCTION AND OPERATION OF THE PRODUCT AND THE HAZARDS INVOLVED.

SAFETY INSTRUCTIONS

WARNING: Make certain power is OFF before installing or maintaining fixture. No user serviceable parts inside.
WARNING: Risk of fire or electric shock. SUITABLE FOR INDOOR DRY LOCATIONS ONLY.
WARNING: To prevent overheating do not install in small enclosed spaces.
WARNING: Do not install this product in an environment outside the listed ambient temperature(-20°C to +40°C).
WARNING: 300W maximum linear run, do not use this Junction Box to provide power to other products.

OCCUPANCY SENSOR

SPECIFICATIONS

Input Voltage: 120V

Operational Frequency: 50/60Hz

Time Delay: 30 seconds, 10 min, 20 min, 30 min

Operating Temperature: 0°C to 55°C (32°F to 131°F)

Mounting Height: reduced sensitivity, 8ft
optimal sensitivity, 6ft

Coverage Diameter: 10ft at 8ft mounting height (Fig. 1)

COVERAGE DIAGRAM

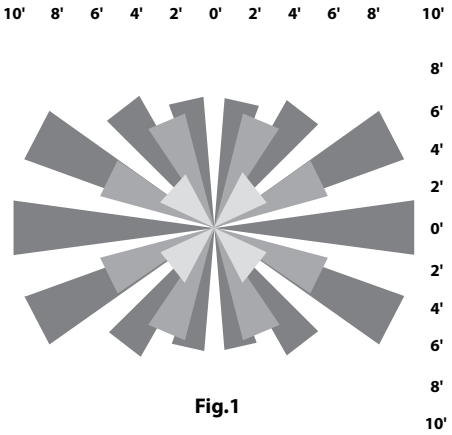

Fig.1

OPERATION

- Uses passive infrared technology to detect motion
- Heat from occupants of room triggers sensor into Auto-on
- Lack of detection triggers **Time Delay**
  - If **Time Delay** period elapses with no detected motion, fixture will turn off
  - Motion detection during **Time Delay** period stops Time Delay and fixture remains on
- Movement must occur across zones of detection (see **Coverage Diagram** (Fig. 1)

SETTING TIME DELAY

- Turn dial to desired **Time Delay** period (see Fig. 2)
- **Time Delay Setting Dial** is located on sensor surface (see Fig. 3)

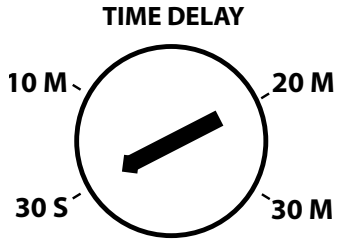

Fig. 2

KNOOK™ UNDERCABINET
OCSKNOOK INSTALLATION INSTRUCTIONS

Thank you for buying RAB lighting fixtures. Our goal is to design the best quality products to get the job done right. We'd like to hear your comments. Call the Marketing Department at 888-RAB-1000 or email: marketing@rabweb.com

MOUNTING INSTRUCTIONS

The fixture is suitable for indoor dry locations only.

1. Remove **Junction Box Cover Screws** (2) and remove **Cover**. Save **Screws** and **Lockwashers** (see Fig. 4)
2. Prepare electrical wire(s) (supplied by others) by stripping conductor ends approximately 3/8".
3. For installation using **3/8" Wire Connector** (supplied) determine mounting orientation and remove one **KNOCKOUT** on desired side of **Junction Box** for electrical supply and attach **3/8" Wire Connector** to **Junction Box** as shown. Outer wire jacket must protude through **3/8" Wire Connector** to adequately protect internal conductors**.**
4. Secure **3/8" Wire Connector** to **Junction Box** by tightening the **Locknut** then tightening **Clamping Crews**(2) on electrical connector fitting securely.
5. Push stripped wire(s) ends into PUSH-IN WIRE CONNECTORS (see WIRING DIAGRAM). Push excess electrical supply wire(s) back into wall.
6. Secure **Junction Box** to mounting surface using (2) **Captive Screws** (supplied), be careful not to drive screws all the way through the cabinet bottom. Use shorter screws if neccessary (supplied by others).
7. Replace and secure **Junction Box Cover** with supplied screws. Make certain **Lockwashers** are located beneath screw heads to properly ground cover.
8. Follow installation instructions provided with undercabinet light fixture for mounting and connector options (Fig. 5).
9. Before powering on make sure that all fixtures connected to J**unction Box** have been properly installed and that all open **Electrical Ports** on the **Junction Box** and fixtures are safely covered with Electrical Port Covers.

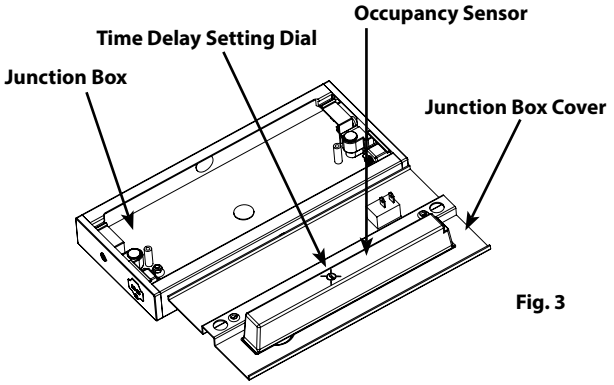

Fig. 3

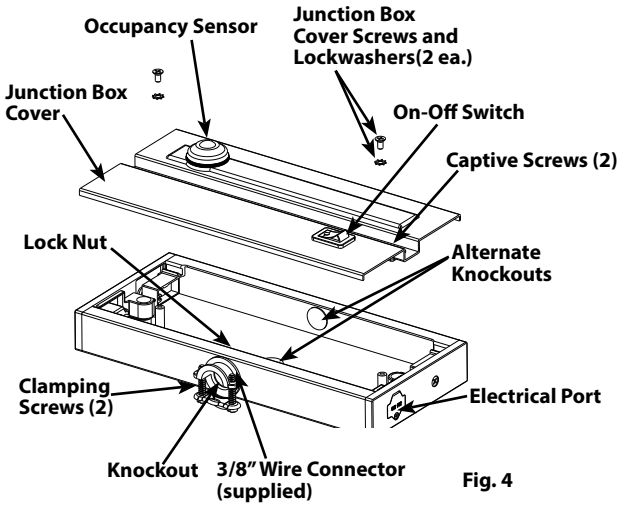

Fig. 4

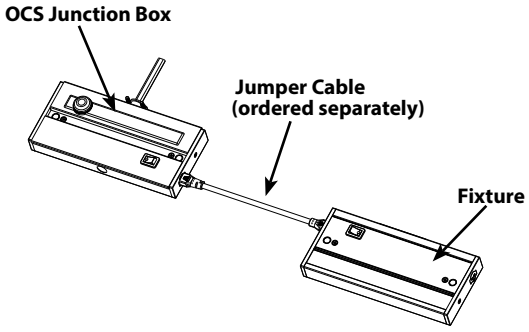

Fig. 5

CLEANING & MAINTENANCE

CAUTION: Be sure fixture temperature is cool enough to touch. Do not clean or maintain while fixture is energized.

1. Clean polycarbonate lens with non-abrasive glass cleaning solution.
2. Do not open fixture to clean the LED. Do not touch the LED.

TROUBLESHOOTING

1. Check that the line voltage at fixture is correct. Refer to wiring directions.
2. Is the fixture grounded properly?

Note: These instructions do not cover all details or variations in equipment nor do they provide for every possible situation during installation operation or maintenance.

©2016 RAB LIGHTING Inc.
Northvale, New Jersey 07647 USA

OCSKNOOK IN-1216

Easy Installation & Product Help

Tech Help Line
Call our experts 888 RAB-1000

rabweb.com
Visit our website for product info

email
Answered promptly sales@rabweb.com