SINCE 1945 KEYSTONE LIGHT MADE EASY | XFiT | POWER SELECT | COLOR SELECT

KT-RHLED200PSHV-14C-8CSB-VDIM-P

ROUND LED HIGH BAY FIXTURE

DESCRIPTION

Round LED High Bay Fixture | Wet Location Rate

APPLICATION

Used for commercial and industrial high bay lighting applications

UL CERTIFIED | DLC LISTED PREMIUM | TAA COMPLIANT | TRUSTED NB3 WARRANTY | 10 YEAR LIMITED WARRANTY

PRODUCT FEATURES

- Available with Keystone's SmartLoop Bluetooth mesh wireless system, with features such as high-end trim, grouping, occupancy/vacancy sensing, and scheduling
- Features Keystone Power Select technology. Adjust power between 200/150/100W
- Features Keystone Color Select technology. Adjust CCT between 3000/4000/5000K
- Designed with Keystone's SmartPort receptacle for adding sensors and controls.
- Powered by Keystone 0–10V dimming LED driver
- Ring-bolt mounting accessory included
- 6' cord for input and dimming wires
- Ribbed polycarbonate lens reduces glare
- Powder-coated aluminum housing
- Low optical flicker
- Built-in 6kV surge protection
- LED lifetime: L70 >100,000 hours @ 25°C
- Ambient operating temperature: −40°C/−40°F to 50°C/122°F
- IP65 rated, wet location
- TAA options available, see Ordering Information below for details

PERFORMANCE SPECIFICATIONS

Catalog Number	Nominal Size	Selectable Wattage	Selectable CCT	Lumens	Efficacy	Input Voltage	Dimmable	CRI	Housing Color
KT-RHLED200PSHV-14C-8CSB-VDIM-P	14"	200W	3000K	26400	132 lm/W	277–480V	0–10V	> 80	Black
			4000K	31200	156 lm/W				
			5000K	28400	142 lm/W				
		150W	3000K	21000	140 lm/W				
			4000K	24300	162 lm/W				
			5000K	22500	150 lm/W				
		100W	3000K	14800	148 lm/W				
			4000K	16500	165 lm/W				
			5000K	16200	162 lm/W				

Note: Preset to highest lumen output (400W / 5000K)
Note: Color uniformity: CCT (Correlated Color Temperature) range as per guidelines outlined in ANSI C78.377-2017

PHOTOMETRIC SPECIFICATIONS

ISOCANDELA PLOT

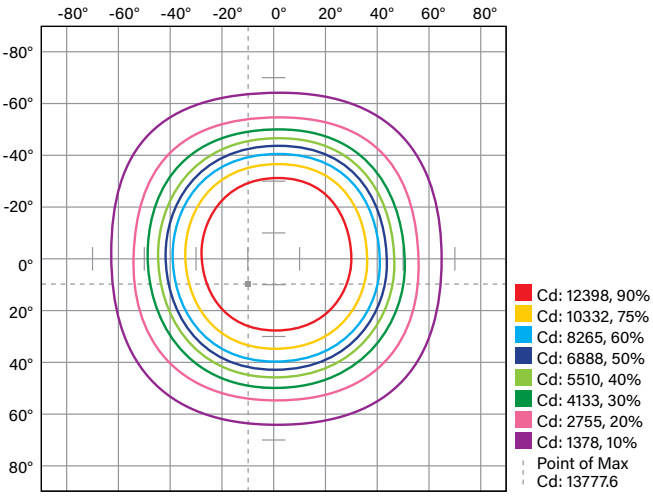

POLAR CANDELA DISTRIBUTION

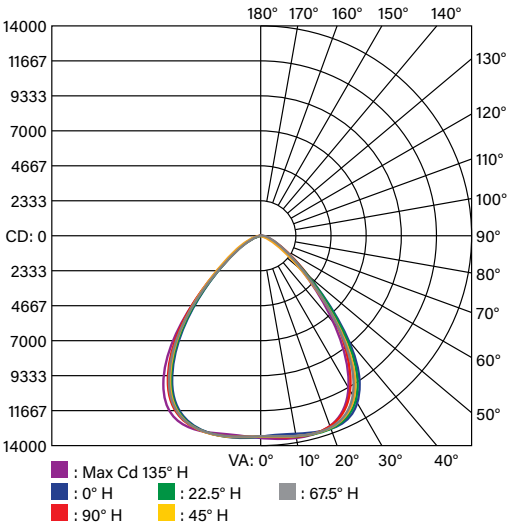

ZONAL LUMEN SUMMARY

Zone	Lumens	% Luminaire
0–30	11180.6	41.6%
0–40	17726.4	65.9%
0–60	24911.7	92.6%
60–90	1909.9	7.1%
70-100	639.2	2.4%
90-120	17.0	0.1%
0-90	26821.7	99.7%
90-180	84.1	0.3%
0-180	26905.8	100%

KT-RHLED200PSHV-14C-8CSB-VDIM-P

ROUND LED HIGH BAY FIXTURE

PHYSICAL SPECIFICATIONS

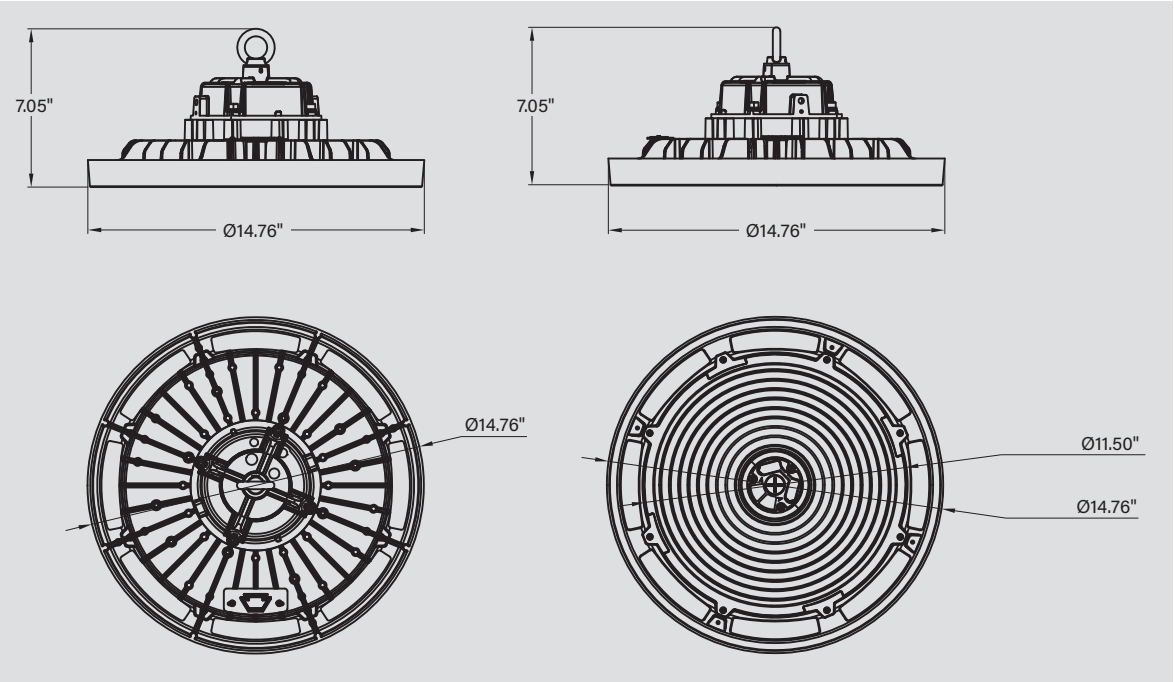

POWER SELECTION AND COLOR TEMPERATURE SELECTION CAPABILITY

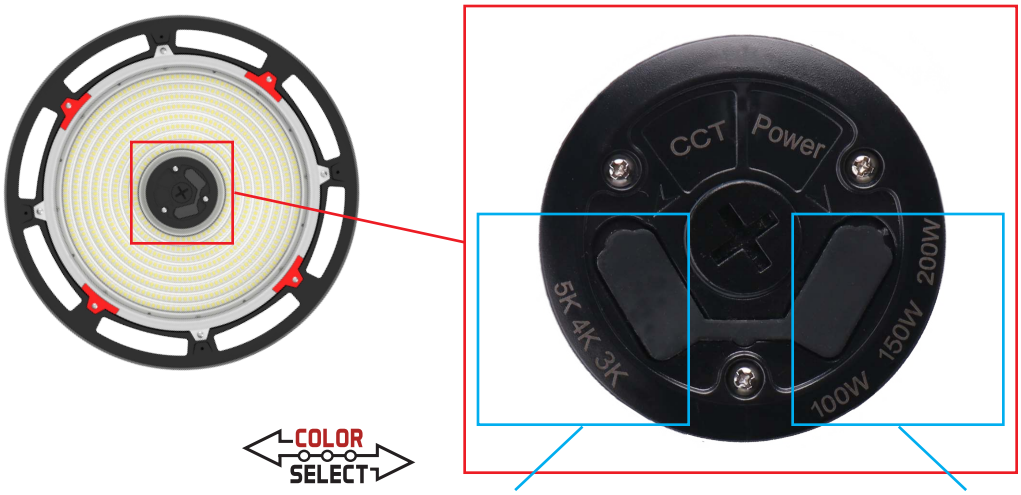

KEYSTONE COLOR SELECT TECHNOLOGY
Adjust CCT between 3000K, 4000K, or 5000K

KEYSTONE POWER SELECT TECHNOLOGY
Adjust power between 200W, 150W, or 100W

KT-RHLED200PSHV-14C-8CSB-VDIM-P

ROUND LED HIGH BAY FIXTURE

QUICK-INSTALL

1. Ensure power is off to the fixture.
2. Remove 1/2" knock-out (KO) plug.
3. Screw in sensor head. (see illustrations)
4. Re-connect power when ready.
5. Program desired settings as needed with Keystone Remote Control.

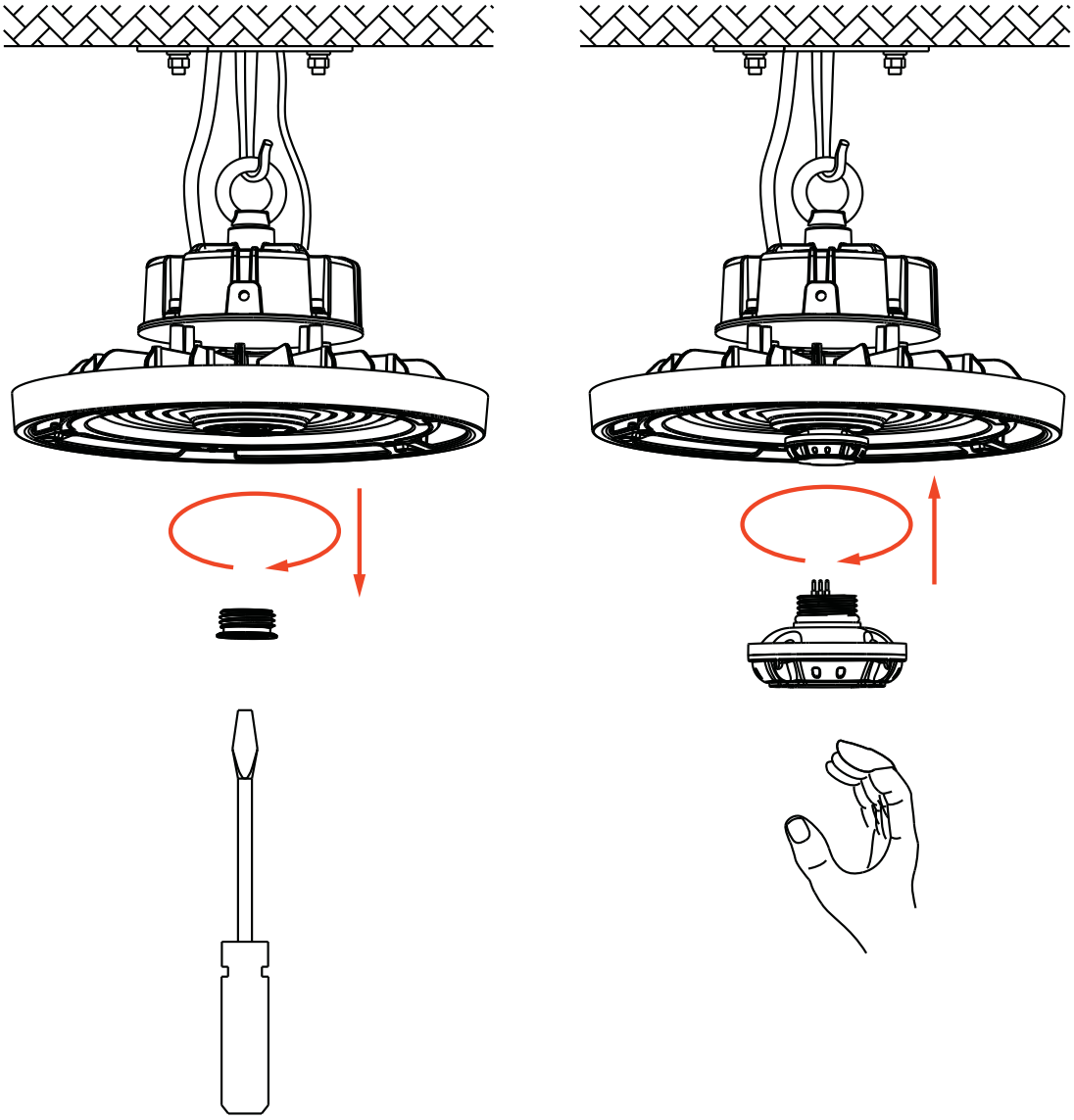

KT-RHLED200PSHV-14C-8CSB-VDIM-P

ROUND LED HIGH BAY FIXTURE

ACCESSORIES

SENSORS AND CONTROLLERS

Factory-Installable OR Field-Installable (field-installable purchased separately)

✓	SUFFIX*	CATALOG NUMBER	DESCRIPTION	UPC	EASY CODE
	/FC3**	KTSL-FC3-12V-PKO-PIR	Smart Loop Bluetooth mesh screw-in PIR occupancy sensor with built-in fixture controller. No wiring required.	843654138862	OCW-60
	/FC4	KTSL-FC4-12V-PKO	Bluetooth mesh wireless screw-in low voltage fixture controller for SmartLoop system; 12V; 0–10V dimming	843654149066	RUN-10
	/PIR3	KTS-PIR3-12V-PKO /G2	Screw-in PIR motion sensor with daylight detection; Adjustable settings via remote control commissioning	843654146447	GLF-99
	/MW3	KTS-MW3-12V-PKO	Screw-in microwave sensor for round high bays; Preset for 10 min hold time, ∞ standby time at 50% dim, daylight disabled	843654135212	TRM-32

SmartLoop Bluetooth wireless PIR motion sensor controller KTSL-FC3-12V-PIR-KO

SmartLoop Bluetooth wireless luminaire controller KTSL-FC4-12V-KO

Screw-in PIR motion sensor KTSL-PIR3-12V-PKO /G2

Screw-in Microwave motion sensor KTS-MW3-12V-PKO

** For factory installation of accessory, add suffix to fixture part number (see ordering examples and instructions on last page of spec sheet).*

*** When installing on Keystone highbay lights and an IP tight connection is desired, use the large gasket provided with the sensor to ensure proper electrical connection and water tight seal. Hand tighten only.*

Field-Installable / Field-Use ONLY (purchased separately)

CATALOG NUMBER	DESCRIPTION	UPC	EASY CODE
KTS-MW3-REMOTECONTROL	Remote control for KTS-MW3-12V-PKO /A or /B and KTS-PIR3-12V-PKO /A or /B sensors, used to set and adjust all senor settings	843654132020	XSR-61

(Accessories continued on next page)

KT-RHLED200PSHV-14C-8CSB-VDIM-P

ROUND LED HIGH BAY FIXTURE

ACCESSORIES (continued)

MOUNTS AND BRACKETS

Factory-Installable OR Field-Installable (field-installable purchased separately)

✓	SUFFIX*	CATALOG NUMBER	DESCRIPTION	UPC	EASY CODE
	/WG	KT-RHLED-WG-2-KIT /G2	Thick steel wire guard, premium powdercoat construction, includes mounting harware, fits all "14C" sized high bay fixtures	843654133270	PHU-26

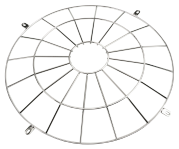

KT-RHLED-WG-2-KIT /G2

** For factory installation of accessory, add suffix to fixture part number (see ordering examples and instructions on last page of spec sheet).*

Field-Installable / Field-Use ONLY (purchased separately)

CATALOG NUMBER	DESCRIPTION	UPC	EASY CODE
KT-RHLED-SM-2-KIT /G2	Steel surface mount kit, includes mounting hardware, fits all "14C" sized high bay fixtures	843654133256	BLT-11
KT-RHLED-JBOX-PM /G2	J-Box, optimized for pole pendant and step down transformer applications, fits all round LED high bay fixtures	843654133300	RAQ-94
KT-RHLED-AR90-2-KIT /G2	Aluminum dome reflector, 90 beam angle, includes mounting hardware, fits all "14C" sized high bay fixtures	843654133294	GBN-40
KT-RHLED-CL90-2-KIT /G2	Clear polycarbonate dome reflector with bottom lens, 90 beam angle, includes mouting hardware, fits all "14C" sized high bay fixtures	843654133621	SFZ-16
KT-RHLED-JHOOK	J Hook for Round LED High Bay Fixtures	843654134703	DDW-74

Surface Mount Kit
KT-RHLED-SM-2-KIT /G2

J-Box
KT-RHLED-JBOX-PM /G2

J-Hook
KT-RHLED-JHOOK

Aluminum Dome Reflector
KT-RHLED-AR90-2-KIT /G2

Clear polycarbonate dome reflector
KT-RHLED-CL90-2-KIT /G2

** Screw in PIR sensors can not be used with KT-RHLED-CL90-2-KIT /G2*

KT-RHLED200PSHV-14C-8CSB-VDIM-P

ROUND LED HIGH BAY FIXTURE

ORDERING INFORMATION

ORDER CODE	PACK QTY.	UPC	EASY CODE	DLC PRODUCT ID
KT-RHLED200PSHV-14C-8CSB-VDIM-P	1	843654156354	VFD-21	TBD
KT-RHLED200PSHV-14C-8CSB-VDIM-P /TAA	1	843654158631	VJF-44	TBD

CATALOG NUMBER BREAKDOWN

KT-RHLED200PSHV-14C-8CSB-VDIM-P

1 2 3 4 5 6 7 8 9 10 11 12 13

1 Keystone Technologies
2 Fixture Type
3 LED Technology
4 Wattage
5 Power Selectable
6 High Voltage
7 Size/Shape
8 80 CRI
9 Color Selectable
10 Color Select Designation
11 0-10V Dimming
12 Premium Series
13 TAA Compliant

2 Fixture Type

RH	Round High Bay

7 Size / Shape

14C	14" Diameter

10 Color Select Designation

B	3000/4000/5000K

13 TAA Compliant

/TAA	Made in Mexico

ORDERING EXAMPLES

FIXTURE WITH TWO FACTORY-INSTALLED ACCESSORIES*

KT-RHLED200PSHV-14C-8CSB-VDIM-P /FC3/WG

FIXTURE WITH SINGLE FACTORY-INSTALLED ACCESSORY

KT-RHLED200PSHV-14C-8CSB-VDIM-P /FC3

FIXTURE WITH NO FACTORY-INSTALLED ACCESSORIES

KT-RHLED200PSHV-14C-8CSB-VDIM-P

** When ordering more then one factory-installed accessory, use multiple suffixes as shown in the ordering examples above.*
Note: *All accessories can also be ordered separately for field installation using just their regular Catalog Number, UPC, or Easy Code.*

KEYSTONE FIXTURE

CATALOG NUMBER
KT-RHLED200PSHV-14C-8CSB-VDIM-P

SENSORS

✓	SUFFIX	CATALOG NUMBER
✓	/FC3	KTSL-FC3-12V-PKO-PIR

MOUNTS AND BRACKETS

✓	SUFFIX	CATALOG NUMBER
✓	/WG	KT-RHLED-WG-2-KIT /G2