SINCE 1945 KEYSTONE LIGHT MADE EASY | XFIT | POWER SELECT | COLOR SELECT

KT-RHLED400PS-18C-8CSD-VDIM-P

ROUND LED HIGH BAY FIXTURE

DESCRIPTION

Round LED High Bay Fixture | Wet Location Rated | High Temp Rated

APPLICATION

Used for commercial and industrial High Bay lighting applications

c UL us LISTED | DLC LISTED PREMIUM | TAA COMPLIANT | TRUSTED NEMA WARRANTY | 10 YEAR LIMITED WARRANTY

PRODUCT FEATURES

- High Power Round High Bay, optimized for 40'+ mounting heights and related higher ambient temperatures
- Design features a large spacer between LED driver and the diecast heat sink to optimize thermal performance
- Features Keystone Power Select technology. Adjust power between 400/320/240W, changing lumen output to set high end trim.
- Features Keystone Color Select technology. Adjust CCT between 4000/5000K
- Designed with Keystone's SmartPort receptacle for adding sensors and controls.
- Powered by Keystone 0–10V dimming LED driver
- J-Hook mounting accessory included
- 6' cord for input and dimming wires
- Powder-coated aluminum housing; Polycarbonate lens
- Ribbed lens to reduce glare
- Low optical flicker
- Built-in 6kV surge protection
- LED lifetime: L70 >100,000 hours @ 25°C fixture ambient
- Ambient operating temperature: −40°C/−40°F to 60°C/140°F
- IP65 rated, wet location
- Listed on QPL DLC, Premium
- TAA options available, see Ordering Information below for details

PERFORMANCE SPECIFICATIONS

Catalog Number	Nominal Size	Selectable Wattage	Selectable CCT	Lumens	Efficacy	Input Voltage	Dimmable	DLC	CRI	Housing Color
KT-RHLED400PS-18C-8CSD-VDIM-P	18"	400W	4000K	58500	146 lm/W	120–277V	0–10V	Yes	>80	Black
			5000K	59000	147 lm/W					
		320W	4000K	49500	155 lm/W					
			5000K	50000	156 lm/W					
		240W	4000K	38000	158 lm/W					
			5000K	38500	160 lm/W					

Note: Preset to highest lumen output (400W / 5000K)
Note: Color uniformity: CCT (Correlated Color Temperature) range as per guidelines outlined in ANSI C78.377-2017

PHOTOMETRIC SPECIFICATIONS

ISOCANDELA PLOT

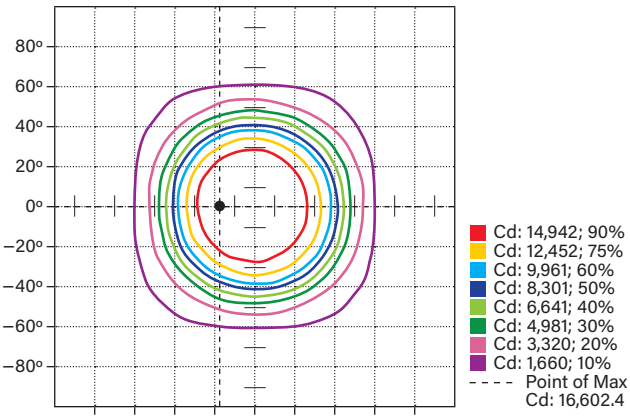

POLAR CANDELA DISTRIBUTION

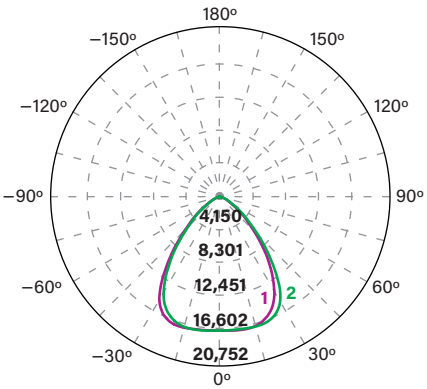

ZONAL LUMEN SUMMARY

Zone	Lumens	% Luminaire
0–30	13,328.7	44.2%
0–40	20,615.9	68.4%
0–60	28,188.7	93.6%
60–90	1,897.0	6.3%
70–100	612.8	2.0%
90–120	0.2	0%
0–90	30,085.7	99.8%
90–180	45.2	0.2%
0–180	30,130.9	100%

KT-RHLED400PS-18C-8CSD-VDIM-P

ROUND LED HIGH BAY FIXTURE

PHYSICAL SPECIFICATIONS

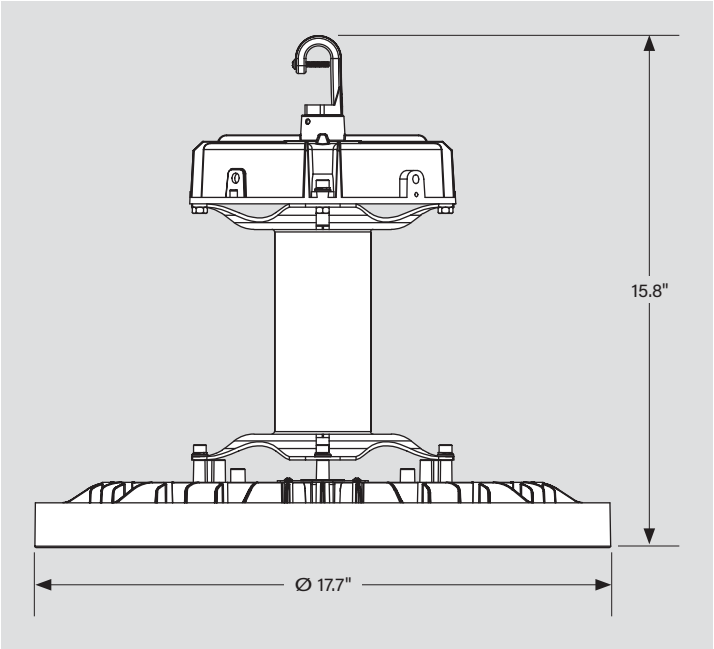

POWER SELECTION AND CCT SELECTION CAPABILITY

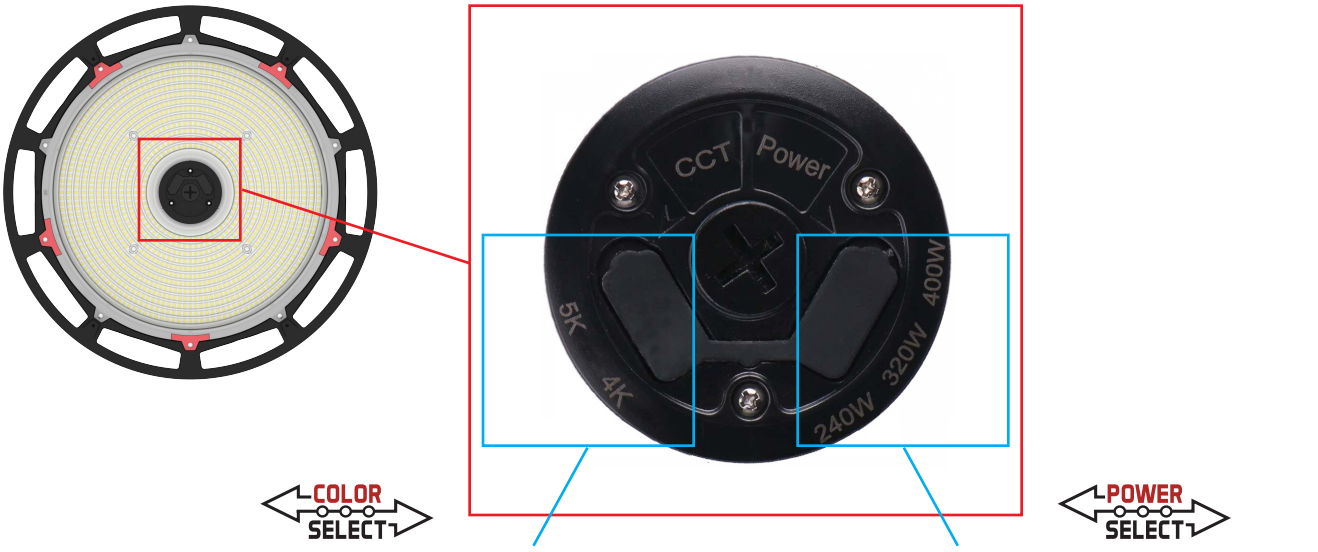

KEYSTONE COLOR SELECT TECHNOLOGY
Adjust CCT between 4000/5000K

KEYSTONE POWER SELECT TECHNOLOGY
Adjust power between 400/320/240W

KT-RHLED400PS-18C-8CSD-VDIM-P

ROUND LED HIGH BAY FIXTURE

QUICK-INSTALL

1. Ensure power is off to the fixture.
2. Remove 1/2" knock-out (KO) plug.
3. Screw in sensor head.

   (see illustrations)
4. Re-connect power when ready.
5. Program desired settings as needed with Keystone Remote Control.

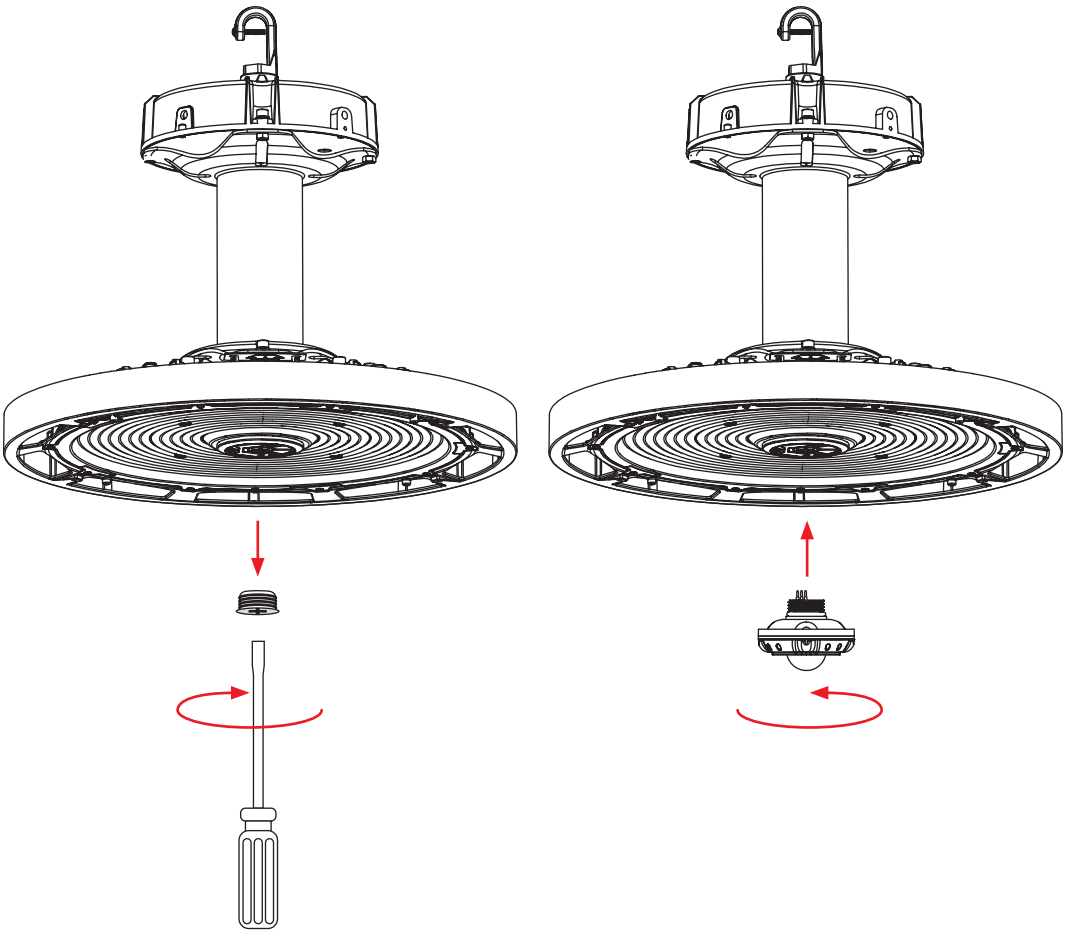

KT-RHLED400PS-18C-8CSD-VDIM-P

ROUND LED HIGH BAY FIXTURE

ACCESSORIES

SENSORS

Factory-Installable OR Field-Installable (field-installable purchased separately)

✓	SUFFIX*	CATALOG NUMBER	DESCRIPTION	UPC	EASY CODE
	/FC3**	KTSL-FC3-12V-PKO-PIR	Bluetooth mesh wireless screw-in low voltage PIR motion sensor and fixture controller for SmartLoop system; with daylight detection	843654138862	OCW-60
	/FC4	KTSL-FC4-12V-PKO	Bluetooth mesh wireless screw-in low voltage fixture controller for SmartLoop system	843654149066	RUN-10
	/PIR3	KTS-PIR3-12V-PKO /G2	Screw-in PIR motion sensor with daylight detection; Adjustable settings via remote control commissioning	843654146447	GLF-99
	/MW3-A	KTS-MW3-12V-PKO /A	Screw-in microwave motion sensor with daylight detection; Preset for 1 min hold time, 3 min standby time at 30% dim, daylight disabled. Adjustable settings via remote control commissioning	843654133317	XYR-25
	/MW3-B	KTS-MW3-12V-PKO /B	Screw-in microwave motion sensor with daylight detection; Preset for 5 min hold time, 10 min standby time at 10% dim, daylight disabled Adjustable settings via remote control commissioning	843654133324	SPF-37

Screw-in PIR motion sensor KTSL-FC3-12V-PKO-PIR

Screw-in PIR motion sensor and fixture controller KTSL-FC4-12V-PKO

Screw-in PIR motion sensor KTSL-PIR3-12V-PKO /G2

Screw-in Microwave motion sensor KTS-MW3-12V-PKO /A

Screw-in Microwave motion sensor KTS-MW3-12V-PKO /B

** For factory installation of accessory, add suffix to fixture part number (see ordering examples and instructions on last page of spec sheet).*

***When installing on Keystone highbay lights and an IP tight connection is desired, use the large gasket provided with the sensor to ensure proper electrical connection and water tight seal. Hand tighten only.*

Field-Installable / Field-Use ONLY (purchased separately)

CATALOG NUMBER	DESCRIPTION	UPC	EASY CODE
KTS-MW3-REMOTECONTROL	Remote control for KTS-MW3-12V-PKO /A or /B and KTS-PIR3-12V-PKO /G2 sensors. Used to set and adjust all sensor settings	843654132020	XSR-61

Remote Control

(*Accessories continued on next* page)

KT-RHLED400PS-18C-8CSD-VDIM-P

ROUND LED HIGH BAY FIXTURE

ACCESSORIES (continued)

MOUNTS AND BRACKETS

Field-Installable / Field-Use ONLY (purchased separately)

CATALOG NUMBER	DESCRIPTION	UPC	EASY CODE
KT-RHLED-SM-3-KIT /G2	Surface mount kit for round highbay fixtures; Fits 400W round highbay fixture; Includes mounting hardware	843654151755	JGH-39
KT-RHLED-AR90-3-KIT /G2	Aluminum reflector kit for 400W KT-RHLED fixtures; 90-degree beam angle; Includes dome and hardware	843654151748	MIV-43
KT-RHLED-CL90-3-KIT /G2	Clear polycarbonate reflector for 400W round highbay fixtures; 90-degree beam angle; Includes dome, bottom lens, and hardware	843654151779	DPW-30
KT-RHLED-WG-3-KIT /G2	Wire guard kit for round highbay fixtures; Fits 400W round highbay fixture; Includes mounting hardware	843654151762	DHU-26
KT-RHLED-JBOX-PM /G2	J-Box; Optimized for pole pendant and step down transformer applications; Fits all round LED high bay fixtures	843654133300	RAQ-94

Surface Mount Kit
KT-RHLED-SM-3-KIT /G2

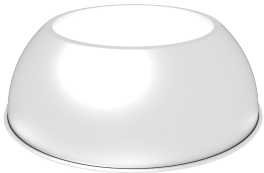

Aluminum Reflector Kit
KT-RHLED-AR90-3-KIT /G2

Wire Guard Kit
KT-RHLED-WG-3-KIT /G2

Clear Polycarbonate Reflector
KT-RHLED-CL90-3-KIT /G2

Screw in PIR sensors can not be used with KT-RHLED-CL90-3-KIT /G2

J-Box
KT-RHLED-JBOX-PM /G2

(*Accessories continued on next* page)

SINCE 1945 KEYSTONE LIGHT MADE EASY | XFIT | POWER SELECT | COLOR SELECT

KT-RHLED400PS-18C-8CSD-VDIM-P

ROUND LED HIGH BAY FIXTURE

ACCESSORIES (continued)

PLUGS

Factory-Installable OR Field-Installable (field-installable purchased separately)

✓	SUFFIX*	CATALOG NUMBER	DESCRIPTION	UPC	EASY CODE
	/515P	KT-P-515P	125V NEMA 5-15P Plug	TBD	TBD
	/L515P	KT-P-L515P	125V NEMA L5-15P Twist Lock Plug	843654123486	GEW-06
	/L615P	KT-P-L615P	250V NEMA L6-15P Twist Lock Plug	843654138619	VPX-09
	/L715P	KT-P-L715P	277V NEMA L7-15P Twist Lock Plug	843654123493	ETV-78
	/L720P	KT-P-L720P	277V NEMA L7-120P Twist Lock Plug	TBD	TBD

FIXTURE ORDERING INFORMATION

ORDER CODE	PACK QTY.	UPC	Easy Code	DLC PRODUCT ID
KT-RHLED400PS-18C-8CSD-VDIM-P	1	843654151731	WBS-26	S-BISO34
KT-RHLED400PS-18C-8CSD-VDIM-P /TAA	1	843654158624	RWN-95	

FIXTURE CATALOG NUMBER BREAKDOWN

KT-RHLED400PS-18C-8CSD-VDIM-P

1 2 3 4 5 6 7 8 9 10 11 12

1 Keystone Technologies
2 Round High Bay Fixture
3 LED Technology
4 Wattage
5 Power Select 400/320/240W
6 18" Diameter Circular Shape
7 80 CRI
8 ColorSelect Technology
9 Color Select 4000/5000K
10 0–10V Dimming
11 Premium Series
12 TAA Compliant

12 TAA Compliant

/TAA	Made in Mexico

ORDERING EXAMPLES

FIXTURE WITH MULTIPLE FACTORY-INSTALLED ACCESSORIES*

KT-RHLED400PS-18C-8CSD-VDIM-P/FC3/L515P

FIXTURE WITH SINGLE FACTORY-INSTALLED ACCESSORY

KT-RHLED400PS-18C-8CSD-VDIM-P/FC3

FIXTURE WITH NO FACTORY-INSTALLED ACCESSORIES

KT-RHLED400PS-18C-8CSD-VDIM-P

KEYSTONE FIXTURE

CATALOG NUMBER
KT-RHLED400PS-18C-8CSD-VDIM-P

SENSORS

✓	SUFFIX	CATALOG NUMBER
✓	/FC3	KTSL-FC3-12V-PKO-PIR

PLUGS

✓	SUFFIX	CATALOG NUMBER
✓	/L515P	KT-P-L515P

** When ordering more then one factory-installed accessory, use multiple suffixes as shown in the ordering examples above.*
Note: *All accessories can also be ordered separately for field installation using just their regular Catalog Number, UPC, or Easy Code.*